CUI Devices is now Same Sky! Learn More

SERIES: AMT20 | DESCRIPTION: MODULAR ABSOLUTE ENCODER

FEATURES

- patented capacitive ASIC technology
- low power consumption
- settings configurable with AMT Viewpoint™ GUI
- digitally set zero position alignment
- 12-bit absolute position via SPI (4096 positions)
- incremental resolutions up to 1024 PPR
- index pulse
- compact modular package with locking hub for ease of installation
- 7 different mounting hole options
- -40~125°C operating temperature

RoHS

ELECTRICAL

parameter	conditions/description	min	typ	max	units
power supply	VDD	4.5	5	5.5	V
start-up time[1]			200		ms
current consumption	with unloaded output		8	10	mA
output high level		VDD-0.8			V
output low level				0.4	V
output current	CMOS sink/source per channel			2	mA
rise/fall time			30		ns

Note: 1. Encoder must be stationary during start-up.

INCREMENTAL CHARACTERISTICS

parameter	conditions/description	min	typ	max	units
channels	quadrature A, B, and Z index				
waveform	CMOS voltage square wave				
phase difference	A leads B for CCW rotation (viewed from front)		90		degrees
quadrature resolutions[2]	96, 192, 200, 250, 384, 400, 500, 512, 768, 800, 1000, 1024				PPR
index	one pulse per 360 degree rotation				
accuracy			0.2		degrees
quadrature duty cycle			50		%

Notes: 2. Resolution selected via AMT Viewpoint™ PC Software. Default resolution set to 1024 PPR. All resolutions are listed as pre-quadrature, meaning the final number of counts is PPR x 4.

ABSOLUTE POSITION CHARACTERISTICS

parameter	conditions/description	min	typ	max	units
resolution				12	bits
positions	encoder can be zero-set via SPI or AMT Viewpoint™ PC Software				
accuracy			0.2		degrees

MECHANICAL

parameter	conditions/description	min	typ	max	units
motor shaft length		9			mm
motor shaft tolerance			NOM +0/-0.015		mm
weight			15.7		g
axial play				±0.3	mm
rotational speed				8000	RPM

ENVIRONMENTAL

parameter	conditions/description	min	typ	max	units
operating temperature		-40		125	°C
humidity	non-condensing			85	%
vibration	10~500 Hz, 5 minute sweep, 2 hours on each XYZ			5	G
shock	3 pulses, 6 ms, 3 on each XYZ			200	G
RoHS	yes				

SERIAL INTERFACE

parameter	conditions/description	min	typ	max	units
protocol	Serial Peripheral Interface (SPI)				
controller	SPI driven by onboard Microchip PIC16F690[1]				
data rate[3]			1		MHz

Note: 3. See Microchip documentation for additional details.

WAVEFORMS

Figure 1
Quadrature signals with index showing counter-clockwise rotation

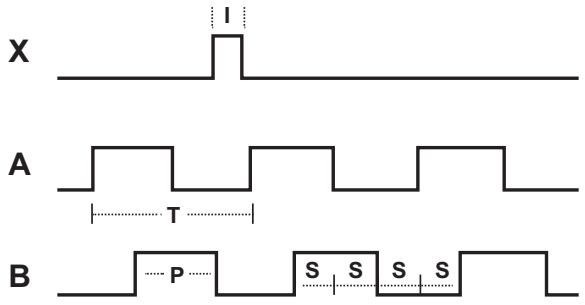

The following parameters are defined by the resolution selected for each encoder. The encoders resolution is listed as Pulses Per Revolution (PPR), which is the number of periods (or high pulses) over the encoders revolution.

Parameter	Description	Expression	Units	Notes
PPR	resolution		Pulses Per Revolution	This is the user selected value and the format all resolutions are listed in
CPR	counts	PPR x 4	Counts Per Revolution	This is the number of quadrature counts the encoder has
T	period	360/R	mechanical degrees	
P	pulse width	T/2	mechanical degrees	
S	A/B state width	T/4	mechanical degrees	This is the width of a quadrature state
I	index width	T/4	mechanical degrees	The width of a once per turn index is the state width for A & B lines

Note: For more information regarding PPR, CPR, or LPR (Lines Per Revolution) view https://www.sameskydevices.com/blog/what-is-encoder-ppr-cpr-and-lpr

PART NUMBER KEY

The AMT203 is designed for 12 bit binary (4,096) operation. For customers who may use the optional quadrature output, one of the resolutions below may be selected as the default quadrature output.

AMT203 X - XXXX - XXXX - X

Base Number

Connector Options:
"blank" = standard connector
S = locking connector

Quadrature Resolution (PPR):

0096	0500
0192	0512
0200	0768
0250	0800
0384	1000
0400	1024

Sleeve Bore Diameter:
2000 = 2 mm
3000 = 3 mm
3175 = 3.175 mm (1/8")
4000 = 4 mm
4760 = 4.76 mm (3/16")
5000 = 5 mm
6000 = 6 mm
6350 = 6.35 mm (1/4")
8000 = 8 mm

Mounting Base:
S = Standard
W= Wide

Note: 1. Conformal coating available upon request

AMT20-V KITS

In order to provide maximum flexibility for our customers, the AMT20 series is provided in kit form standard. This allows the user to implement the encoder into a range of applications using one sku#, reducing engineering and inventory costs.

ORDERING GUIDE

AMT203X-V

Connector Options:
"blank" = standard connector
S = locking connector

SLEEVES								
2mm	3mm	1/8 inch (3.175mm)	4mm	3/16 inch (4.76mm)	5mm	6mm	1/4 inch (6.35mm)	8mm
Light Sky Blue	Orange	Purple	Gray	Yellow	Green	Red	Snow	Blue

BASE	WIDE BASE	TOP COVER	SHAFT ADAPTER	TOOL A	TOOL C
	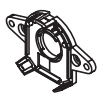				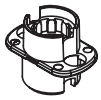

ENCODER INTERFACE

PINOUT CONNECTOR	
Function	
#	AMT203
1	N/A
2	CSB
3	MISO
4	GND
5	SCK
6	+5 V
7	MOSI
8	B
9	N/A
10	A
11	N/A
12	Z
13	N/A
14	N/A

STANDARD CONNECTOR OPTION

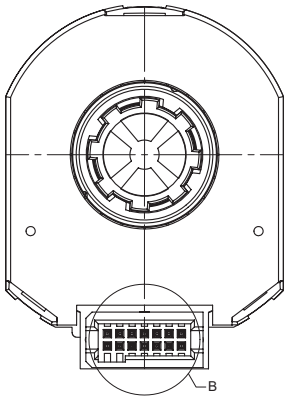

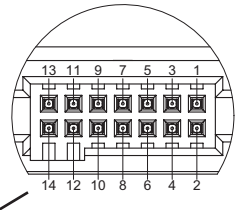

DETAIL B
SCALE 4 : 1

Mating Connector:
Samtec ISDF-07-D

LOCKING CONNECTOR OPTION

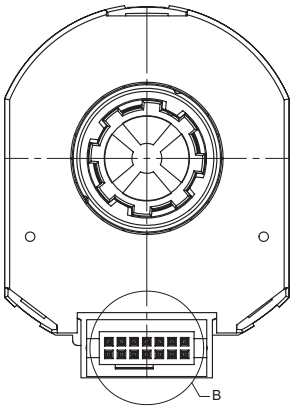

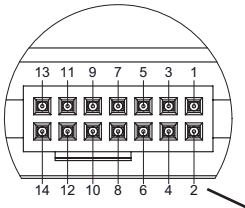

DETAIL B
SCALE 4 : 1

Mating Connector:
Samtec ISDF-07-D-L

MECHANICAL DRAWING

AMT203

units: mm
tolerance: ±0.1

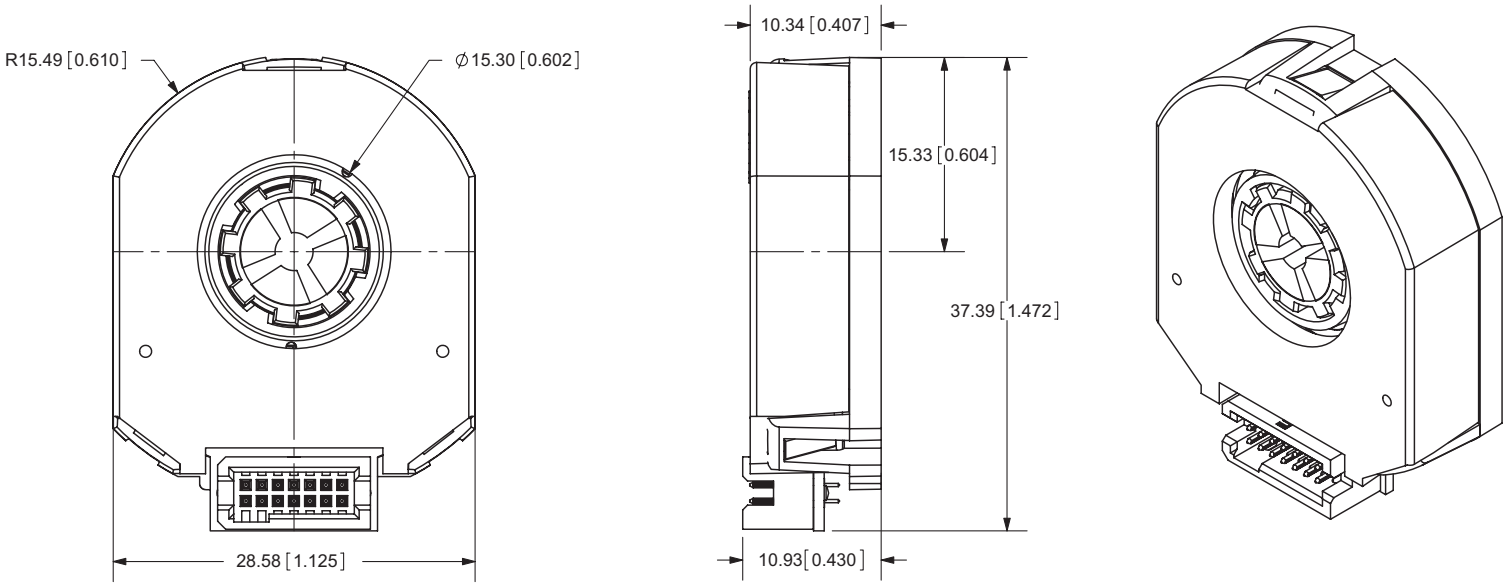

AMT203 WIDE BASE

units: mm
tolerance: ±0.1

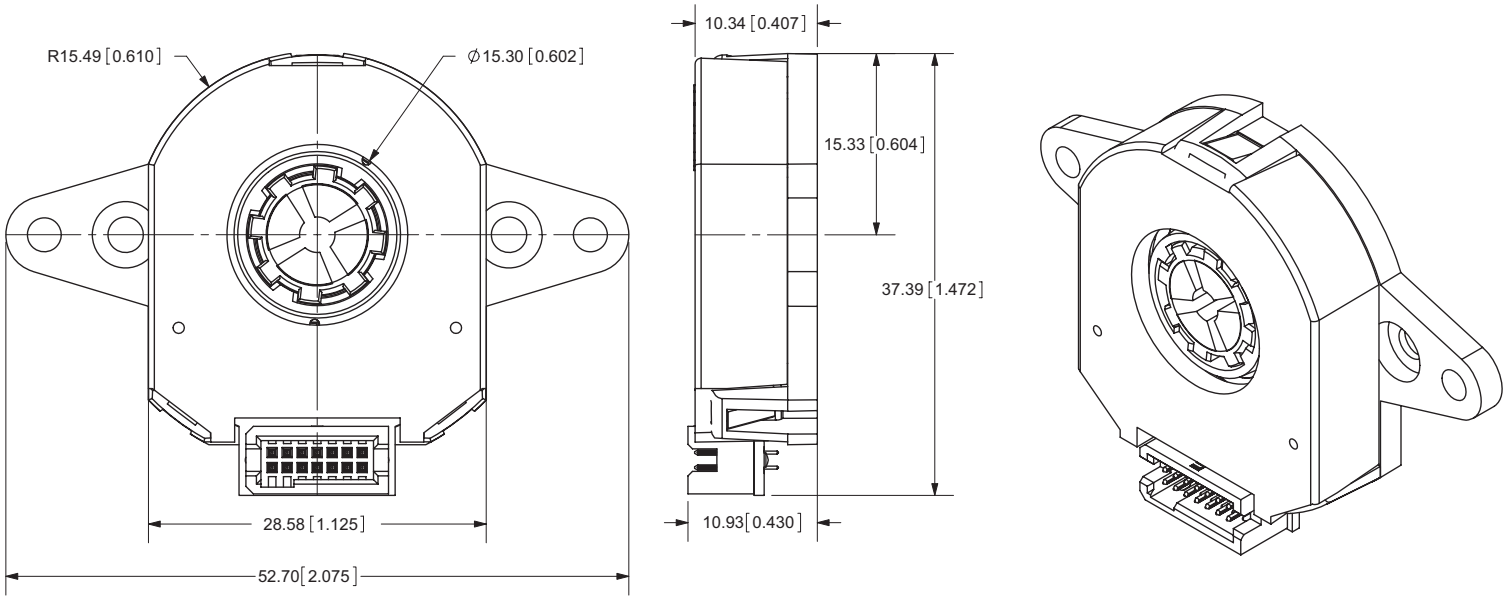

MECHANICAL DRAWING (CONTINUED)

MOUNTING HOLE PATTERNS

STANDARD BASE

units: mm[inch]
tolerance: ±0.1

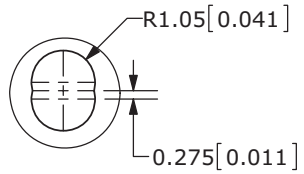

DETAIL A
SCALE 4 : 1

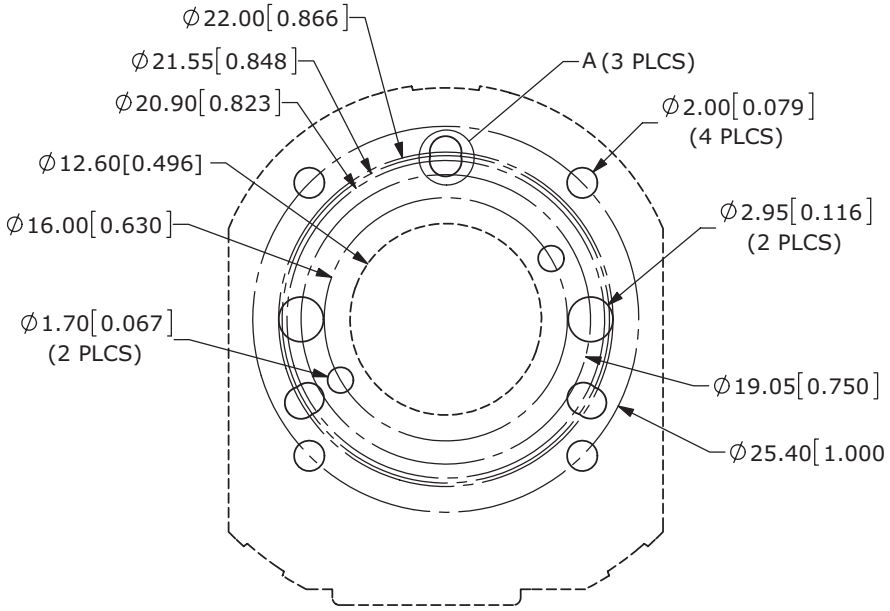

WIDE BASE

units: mm[inch]
tolerance: ±0.1

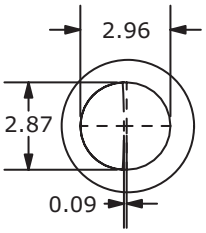

DETAIL A
SCALE 4 : 1

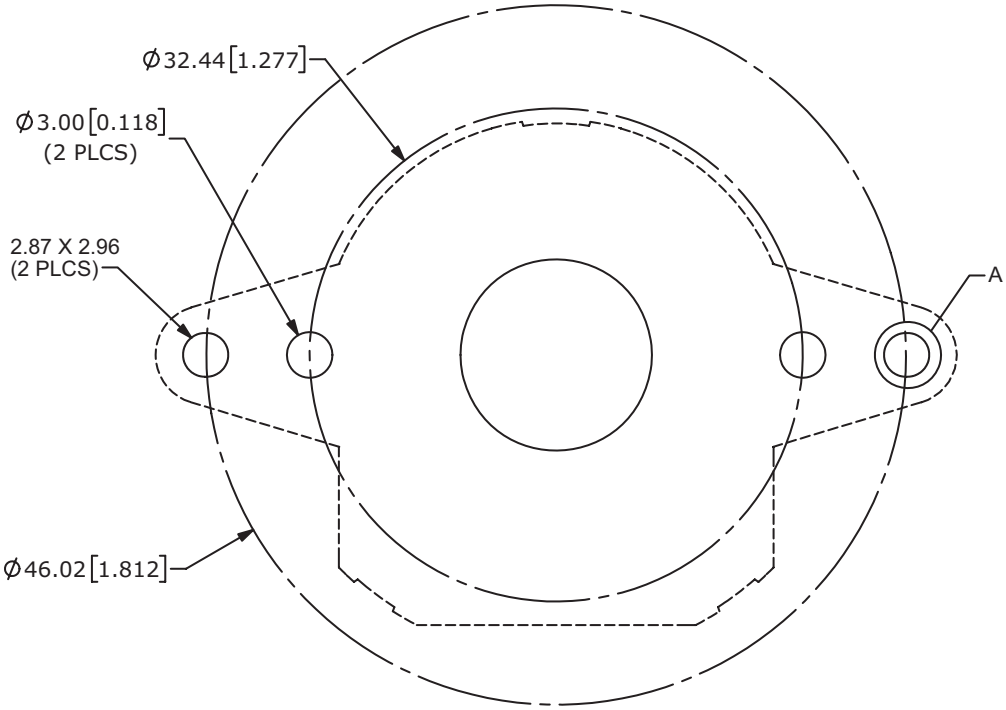

ASSEMBLY PROCEDURE

STEP 1

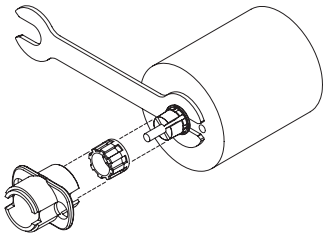

1. Insert Tool A as a spacer that defines the distance to the mounting surface.
2. Slide appropriate sized Sleeve over shaft all the way down to Tool A.
3. Slide Shaft Adaptor over Sleeve.
4. Use Tool C to press Shaft Adaptor over Sleeve (ensure Shaft Adapter and Tool C spline alignment) until flush with Tool A.

STEP 2

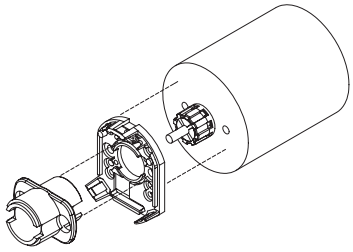

1. Remove Tools A and C.
2. Place Base on motor, with Tool C used as a centering tool.

STEP 3

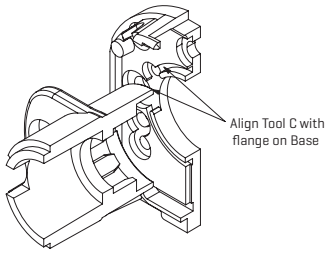

1. Align Tool C with flange on Base.
2. Slide Base and Tool C onto motor, centering onto the Shaft Adapter.

STEP 4

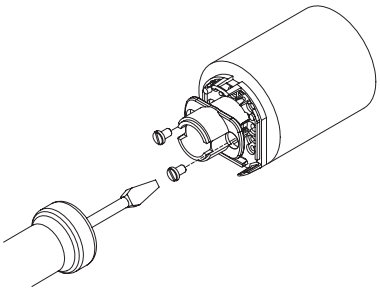

1. Fasten the Base on the motor (Tool C may need to be rotated to allow for some mounting configurations).
2. Remove Tool C.

STEP 5

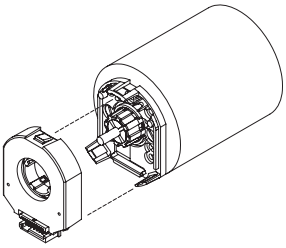

1. Snap the Top Cover onto the Base, carefully observing that the teeth of the Shaft Adaptor align with the grooves in the hub. *

* *We recommend no more than three cycles of mounting and removal of the AMT top cover base. Multiple cycles of mounting and removing the top cover can cause base fatigue over time and affect encoder performance.*

STEP 6

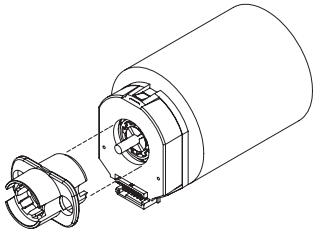

1. Make sure the snaps are fully engaged by pressing on the Hub with the reverse side of Tool C.
2. When assembly is finished, the Shaft Adaptor, Sleeve and Rotor Hub should all be flush with the Motor Shaft rotating freely.

APPLICATION NOTES

ENCODER OPERATIONAL MODE

• Initialization mode: At power up the encoder goes through an initiation and stabilization procedure. This includes microprocessor stabilization and the program for getting the absolute start position. This takes less than 100 milliseconds.
• Tracking mode:
1. MCU 12 bit position register is updated from every 48 µs.
2. For accurate position information without the 48 µs incremental outputs A/B can be used for tracking. These outputs are operational up to 8000 RPM without speed error.
3. When using the incremental output there also is a Z index pulse that occurs once per turn.

SERIAL PERIPHERAL INTERFACE COMMANDS

The Serial Peripheral Interface (SPI) bus is a standard serial interface that operates in full duplex mode. It consists of 4 signals:
1. MOSI: Master Out Slave In
2. MISO: Master In Slave Out
3. SCK: Serial Clock
4. CSB: Chip Select (active low)

SPI BUS

The SPI bus transfers multiples of 8 bits in a frame. Data is captured on the rising edge of SCK and the output data is changed after the falling edge of SCK.

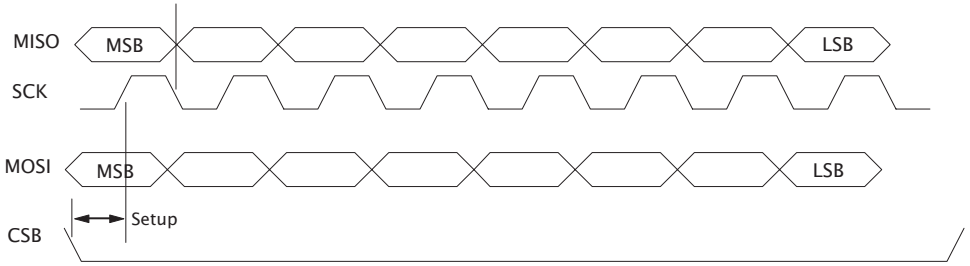

Terminology
MSB = most significant byte
LSB = least significant byte
msb = most significant bit
lsb = least significant bit

Serial Peripheral Interface Bus (SPI) on AMT203 Timing Diagram
(Figure 1)

The data out on MISO is valid once CSB goes low. The MOSI data is valid after the falling edge of SCK. The encoder drives data out on MISO for as long as CSB is low.

Normally, CSB goes low, then after 8 clock cycles the command is interpreted. CSB high resets the clock counter, and terminates any command sequence.

APPLICATION NOTES (CONTINUED)

SPI COMMANDS

All commands are 8 bits long. The msb is shifted in first, and is the leftmost bit shown in Figure 1.

Encoder Protocol Considerations:

The encoder is designed to operate with a high speed SPI link, in full duplex mode. This implies the host can issue commands and read data as quickly as necessary but there has to be an acknowledgement from the slave just before the data is transferred.

First the host will issue a command, then the encoder may respond with wait responses (0xA5) until ready. Once ready the encoder will echo the original command received from the master, followed by the requested data.

For example, to read the position the master will send the rd_pos command (0x10), it will then send no operation commands (nop_a5, 0x00) until it receives the original rd_pos command back. Once it receives the rd_pos response from the encoder, it knows that the next two bytes of data will be the MSB and the LSB respectively. To receive those two bytes the master will send two no operation commands.

It is recommended that the master leave a 20 µs delay between reads to avoid extending the read time by forcing wait sequences.

Each byte transmitted must be followed by a release of the Chip Select line (CSB).

Command 0x00: nop_a5 (no operation)

This no operation command is ignored by the encoder and simply causes the next byte of data to be read. The encoder will respond with 0xA5 if there is no remaining data to be sent.

Command 0x10: rd_pos (read position)

This command causes a read of the current position.

To read position this sequence should be followed:
1. Master sends rd_pos command. Encoder responds with idle character.
2. Continue sending nop_a5 command while encoder response is 0xA5
3. If response was 0x10 (rd_pos), send nop_a5 and receive MSB position (lower 4 bits of this byte are the upper 4 of the 12-bit position)
4. Send second nop_a5 command and receive LSB position (lower 8 bits of 12-bit positon)

Note that it is possible to overlap commands. For instance, instead of issuing nop_a5 for steps 3 and 4, you could begin another read position sequence since the position data is already in the buffer. The read and write FIFOs for the streams are 16 bytes long and it is up to the user to avoid overflow.

Command 0x70: set_zero_point (zero set)

This command sets the current position to zero and saves this setting in the EEPROM.

To set the zero point this sequence should be followed:
1. Send set_zero_point command
2. Send nop_a5 command while response is not 0x80
3. A response of 0x80 means that the zero set was successful and the new position offset is stored in EEPROM.
4. The encoder must be power cycled. If the encoder is not power cycled, the position values will not be calculated off the latest zero position. When the encoder is powered on next the new offset will be used for the position calculation.

REVISION HISTORY

rev.	description	date
1.0	initial release	05/01/2010
1.01	updated pin-out	10/01/2010
1.02	updated application note	01/01/2011
1.03	updated SPI commands	09/16/2011
1.04	addition of shock and incremental output current data, correction of vibration data, updated part number key	09/30/2011
1.05	updated Part Number Key	03/09/2012
1.06	updated tools	07/13/2012
1.07	added locking connector drawing	02/12/2013
1.08	updated spec	12/09/2013
1.09	updated spec	11/19/2014
1.10	updated spec	05/13/2016
1.11	changed outer mounting holes to be oblong on wide base version, part number key updated	03/23/2018
1.12	added wide base to kits	10/18/2018
1.13	brand update	11/21/2019
1.14	added motor shaft tolerance details, updated start-up details	09/10/2021
1.15	logo, datasheet style update	08/05/2022
1.16	CUI Devices rebranded to Same Sky	09/12/2024

The revision history provided is for informational purposes only and is believed to be accurate.

Same Sky offers a one (1) year limited warranty. Complete warranty information is listed on our website.

Same Sky reserves the right to make changes to the product at any time without notice. Information provided by Same Sky is believed to be accurate and reliable. However, no responsibility is assumed by Same Sky for its use, nor for any infringements of patents or other rights of third parties which may result from its use.

Same Sky products are not authorized or warranted for use as critical components in equipment that requires an extremely high level of reliability. A critical component is any component of a life support device or system whose failure to perform can be reasonably expected to cause the failure of the life support device or system, or to affect its safety or effectiveness.