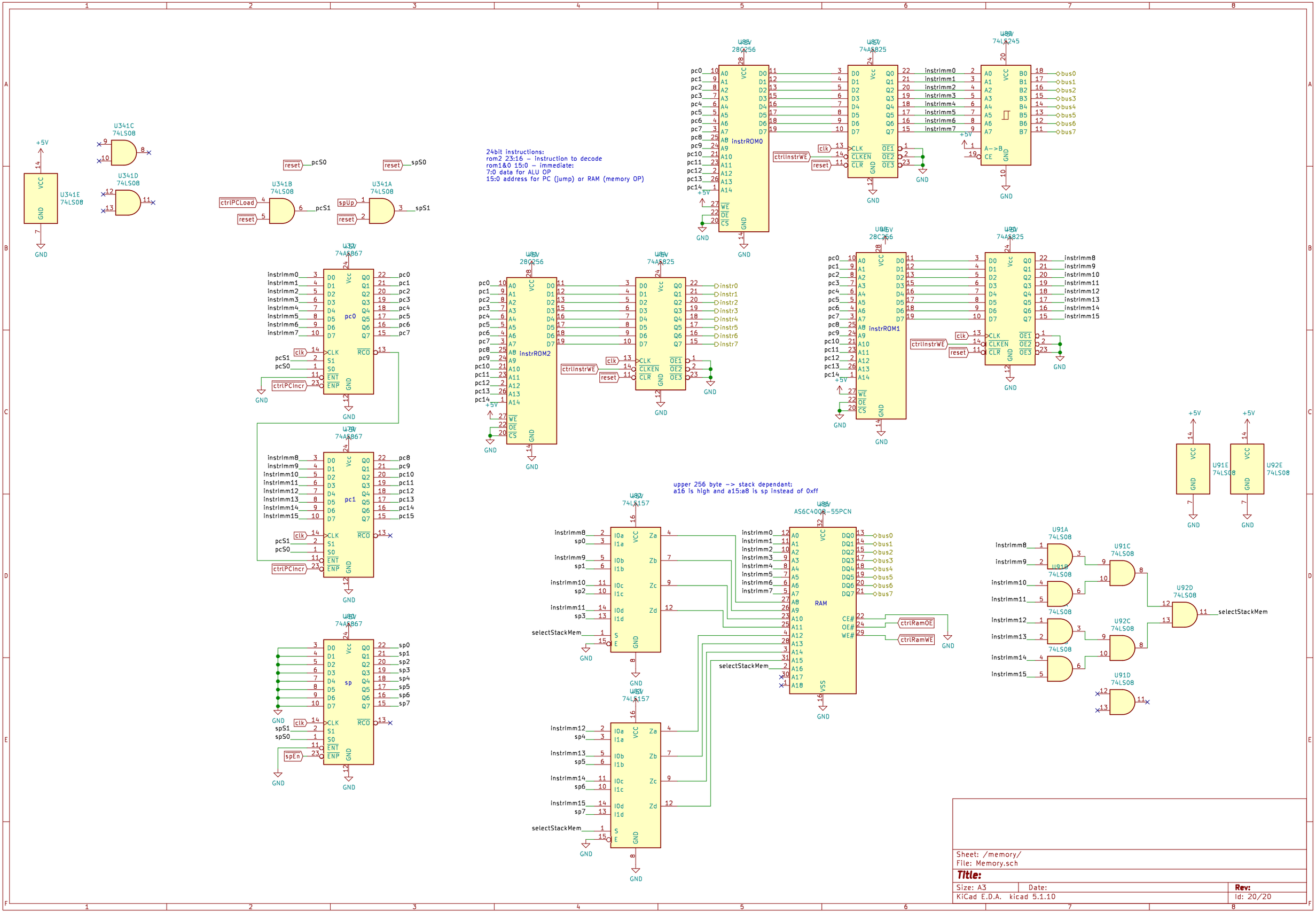

Sheet: /memory/
File: Memory.sch

Title:

Size: A3	Date:	Rev:
KiCad E.D.A. kicad 5.1.10		Id: 20/20