AN5945

Application note

How to connect the SATEL-VL53L8 to an STM32 Nucleo-64 board

Introduction

The purpose of this document is to show how to connect the SATEL-VL53L8 to an STM32 Nucleo-64 board.

The SATEL-VL53L8 is composed of one miniaturized breakout board, which allows for simple integration into customer development and evaluation devices. The PCB section supporting the VL53L8 module is perforated, so developers can break off the mini-PCB for use in a 1.8 V supply application using flying wires.

The SATEL-VL53L8 is designed to connect the VL53L8 sensor remotely to any type of electronic controller.

1 Hardware connection guidelines

I2C or SPI communication can be used to interface with the VL53L8 module. The sections below give an overview of the connection to be done.

In order to connect the VL53L8 sensor to a Nucleo board, the following are required: a 1V8 regulator, and some I2C level shifters. The SATEL-VL53L8 board supplies these two circuits.

Use of SATEL-VL53L8 flying leads to connect to a NUCLEO-F401RE board using I2C communication

Figure 1. SATEL-VL53L8 flying lead connection to NUCLEO-F401RE using I2C communication shows how to connect the SATEL-VL53L8 board directly to a NUCLEO-F401RE board, without an X-NUCLEO-53L8A1 expansion board.

Figure 1. SATEL-VL53L8 flying lead connection to NUCLEO-F401RE using I2C communication

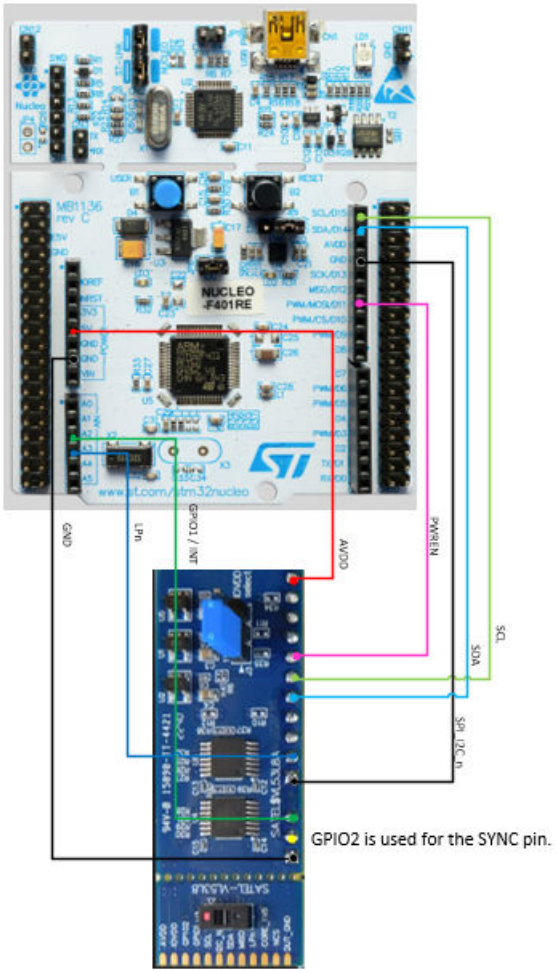

Use of SATEL-VL53L8 flying leads to connect to a NUCLEO-F401RE board using SPI communication

Figure 2. SATEL-VL53L8 flying lead connection to NUCLEO-F401RE using SPI communication shows how to connect the SATEL-VL53L8 board directly to a NUCLEO-F401RE board, without an X-NUCLEO-53L8A1 expansion board using the SPI communication.

Figure 2. SATEL-VL53L8 flying lead connection to NUCLEO-F401RE using SPI communication

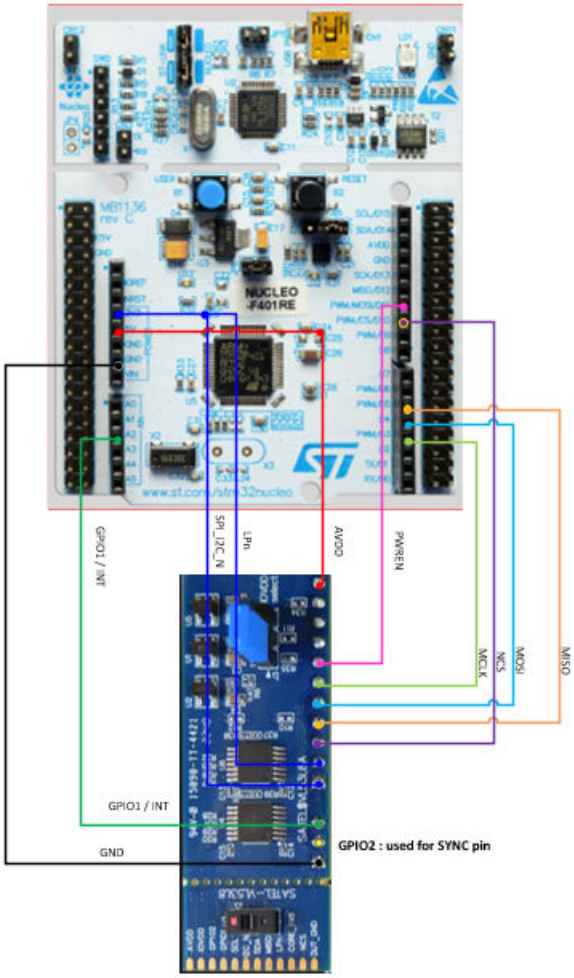

Use of VL53L8 mini-PCB flying leads to connect to a NUCLEO-F401RE board

The VL53L8 module needs a 1V8 alimentation, which is not available on the NUCLEO-F401. So, unless one uses a 1V8 external alimentation to power the SATEL-VL53L8 mini-PCB it is not possible to use it with a NUCLEO-F401RE board.

2 Programming guidelines

The software project to make the sensor board work directly with the NUCLEO-F401RE is available on st.com.

Download the package X-CUBE-TOF1, then install the X-CUBE-TOF1 software pack in CubeMX.

The precompiled software project is available under:

C:\Users\<username>\STM32Cube\Repository\Packs\STMicroelectronics\X-CUBE-TOF1\<version>\Projects\NUCLEO-F401RE\Examples\CUSTOM\VL53L8_SimpleRanging.

A SATEL-VL53L8 board project for NUCLEO-F4101RE is available in the directory tree as shown in Figure 3. X-CUBE-TOF1 directory. The difference between the ST common expansion board X-NUCLEO-53L8A1 and the SATEL-VL53L8 board is the classification name. The SATEL-VL53L8 board project is part of the “CUSTOM” directory.

Figure 3. X-CUBE-TOF1 directory

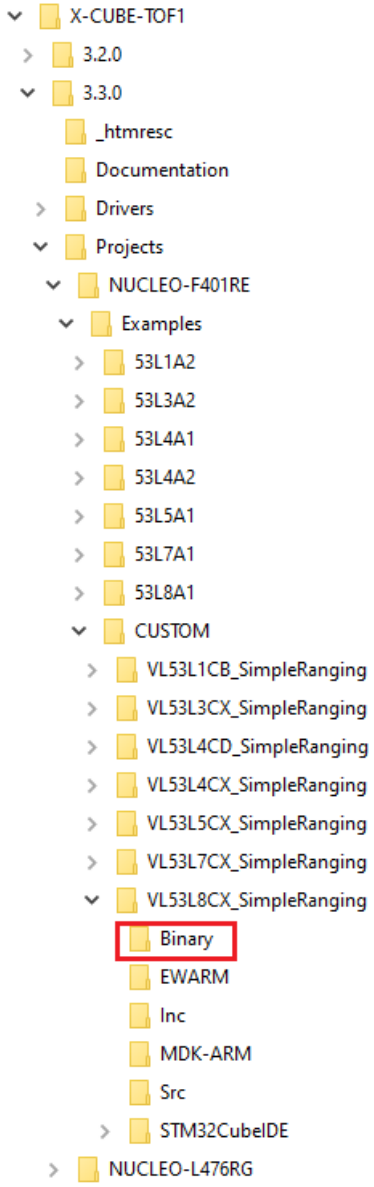

The VL53L8 board project is developed for IAR Systems®, Keil®, and STM32CubeIDE toolkits. The user can select any software development kit and make it run.

Another method is to directly push the embedded software binary file. Simply drag and drop the binary file located in the binary directory, into the STM32 target represented by "NODE_F401RE" in the PC file tree.

By default, the software programs the sensor in 4x4 mode. To render the result, use a serial tool (such as Tera Term) to access the Nucleo com port, as shown in Figure 4. Display rendering in 4x4 mode (default). By default, the display is rendered in 4x4 mode.

Figure 4. Display rendering in 4x4 mode (default)

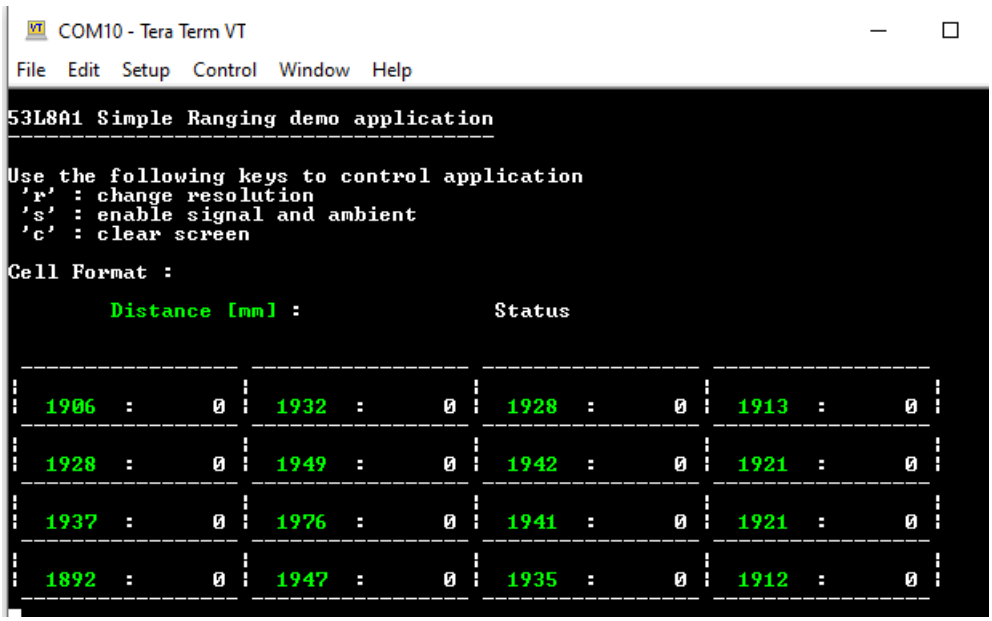

The SATEL-VL53L8 board project embeds bidirectional communication through a universal asynchronous receiver transmitter (UART). The resolution can be changed by typing “r”. One can also display the signal and ambient values by typing “s”. Figure 5. Display rendering in 8x8 mode is a display in 8x8 mode with signal and ambient values.

Figure 5. Display rendering in 8x8 mode

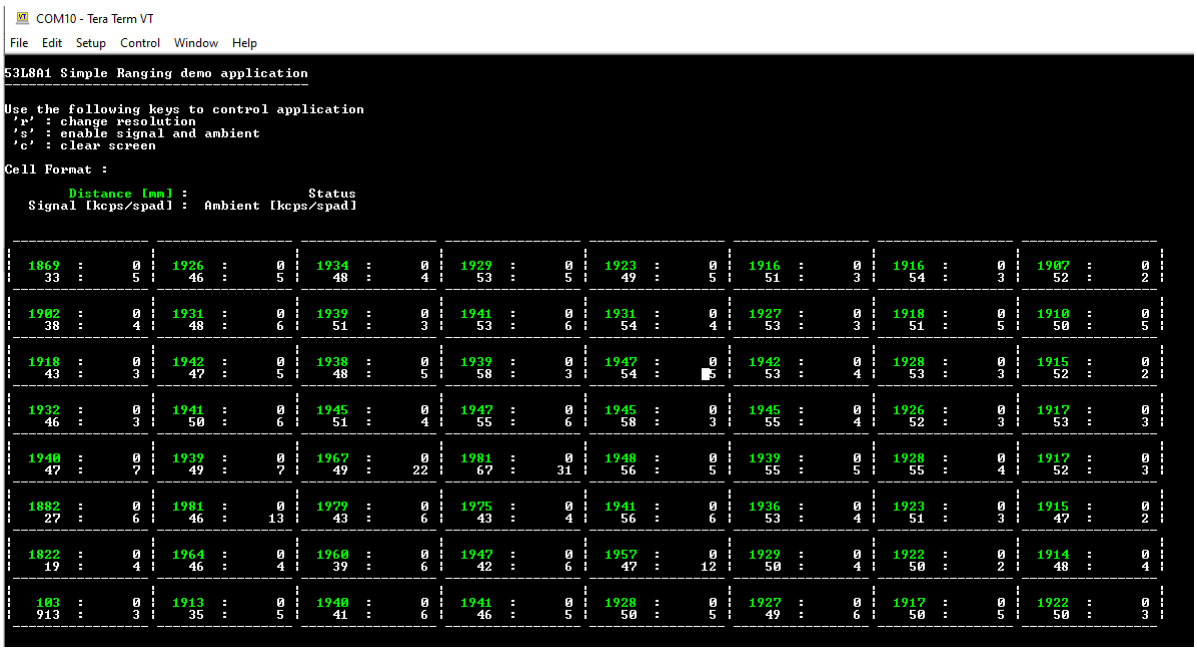

3 Schematic diagrams

Figure 6. Circuit schematic

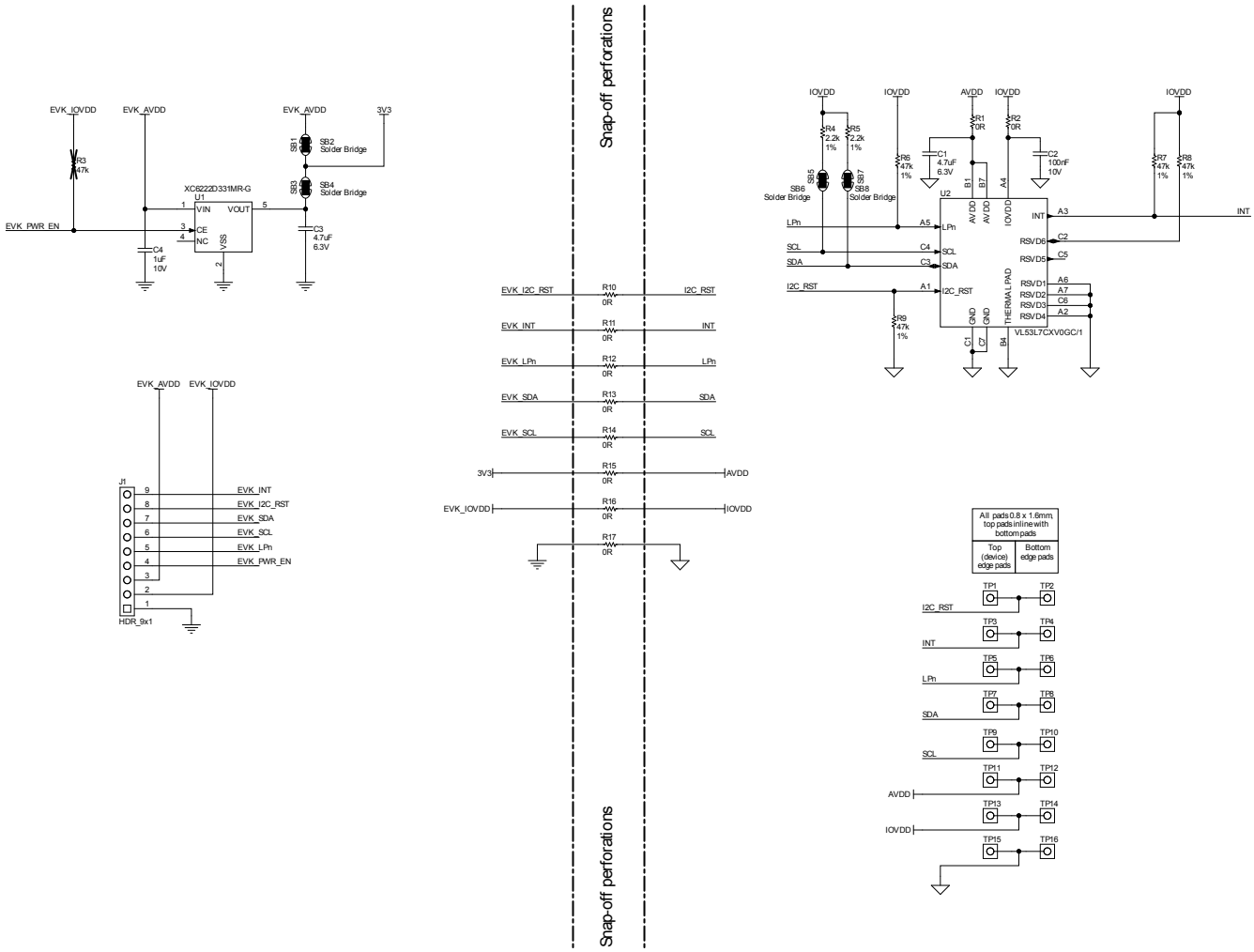

Revision history

Table 1. Document revision history

Date	Version	Changes
27-Apr-2023	1	Initial release

IMPORTANT NOTICE – READ CAREFULLY

STMicroelectronics NV and its subsidiaries (“ST”) reserve the right to make changes, corrections, enhancements, modifications, and improvements to ST products and/or to this document at any time without notice. Purchasers should obtain the latest relevant information on ST products before placing orders. ST products are sold pursuant to ST’s terms and conditions of sale in place at the time of order acknowledgment.

Purchasers are solely responsible for the choice, selection, and use of ST products and ST assumes no liability for application assistance or the design of purchasers’ products.

No license, express or implied, to any intellectual property right is granted by ST herein.

Resale of ST products with provisions different from the information set forth herein shall void any warranty granted by ST for such product.

ST and the ST logo are trademarks of ST. For additional information about ST trademarks, refer to www.st.com/trademarks. All other product or service names are the property of their respective owners.

Information in this document supersedes and replaces information previously supplied in any prior versions of this document.

© 2023 STMicroelectronics – All rights reserved