RAS 545 Homework 3: Forward and Inverse Kinematics of SCARA Robot

Q1) Forward Kinematics

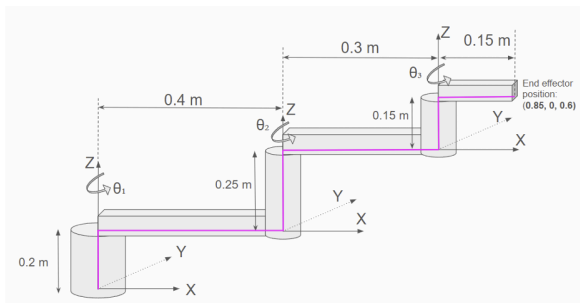

1. DH parameter Table

	θ_i	d_i	a_i	α_i
1	θ_1	0.2	0.4	0
2	θ_2	0.25	0.3	0
3	θ_3	0.15	0.15	0

θ_i - joint angle
d_i - offset
a_i - link length
α_i - twist

2. Homogeneous Transformation Matrices

For each link the transformation matrix A_i is calculated using the standard DH formula. The total transformation from the base to the end-effector is the product of these matrices:

T = $A_1 \cdot A_2 \cdot A_3$

3. General Position Equations

By extracting the first three elements of the fourth column of the final transformation matrix (T) we obtain the equations for the end-effector position (X, Y, Z):

X Position:
$X = 0.4 \cos(\theta_1) + 0.3 \cos(\theta_1 + \theta_2) + 0.15 \cos(\theta_1 + \theta_2 + \theta_3)$
Y Position:
$Y = 0.4 \sin(\theta_1) + 0.3 \sin(\theta_1 + \theta_2) + 0.15 \sin(\theta_1 + \theta_2 + \theta_3)$

Z Position:
Z = 0.2 + 0.25 + 0.15 = 0.6 m

4. Validation

The X, Y, Z coordinates of the end effector at θ_1 = 0, θ_2 = 0, θ_3 = 0 are as shown below:

X = 0.4(1) + 0.3(1) + 0.15(1) = **0.85 m**
Y = 0.4(0) + 0.3(0) + 0.15(0) = **0 m**
Z = **0.6 m**

```
Results for angles [0.0, 0.0, 0.0]:
X: 0.8500 m
Y: 0.0000 m
Z: 0.6000 m
```

The X, Y, Z coordinates of the end effector at θ_1 = 10° , θ_2 = 15°, θ_3 = 20° are as shown below:
X = 0.4 cos(10°) + 0.3 cos(25°) + 0.15 cos(45°) = **0.7719 m**
Y = 0.4 sin(10°) + 0.3 sin(25°) + 0.15 sin(45°) = **0.3023 m**
Z = 0.2 + 0.25 + 0.15 = **0.6 m**

```
Results for angles [10.0, 15.0, 20.0]:
X: 0.7719 m
Y: 0.3023 m
Z: 0.6000 m
```

Computational Note: *These equations and values were verified using the attached MATLAB script* ***HW3_FK.m***

5. SCARA Workspace

The workspace is a planar annulus located at Z = 0.6 m with an outer radius R_{max} = 0.85 m.

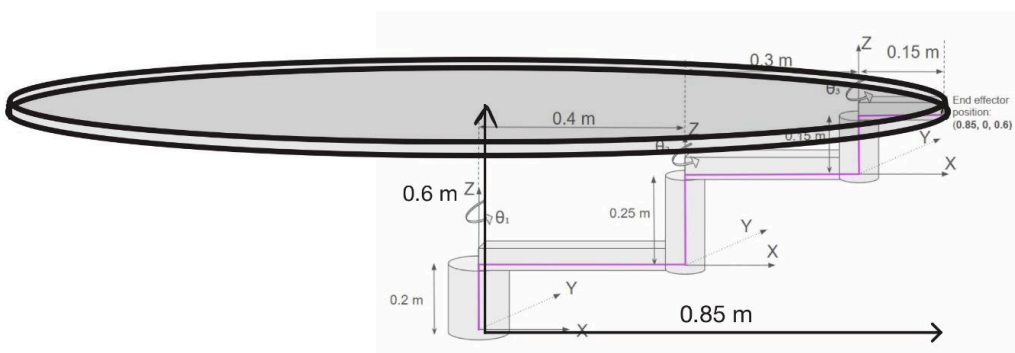

Q2) Forward Kinematics Simulator in Simulink

The below image shows a SimScape Multibody model of the SCARA Robot.

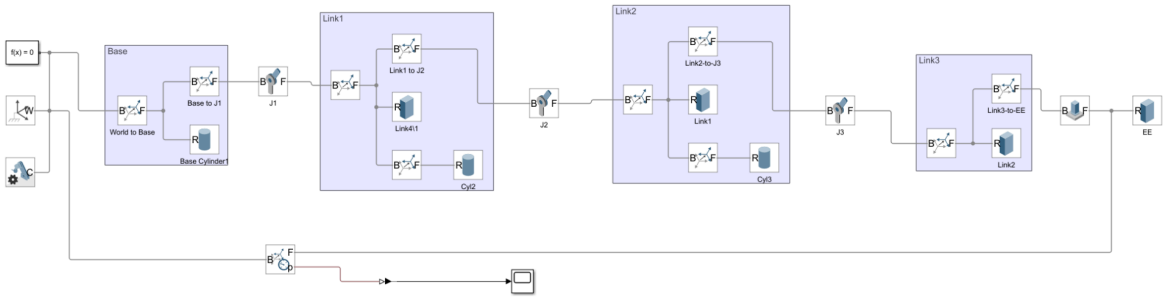

This Simulink system is used to simulate and verify the forward kinematics of the SCARA Robot.

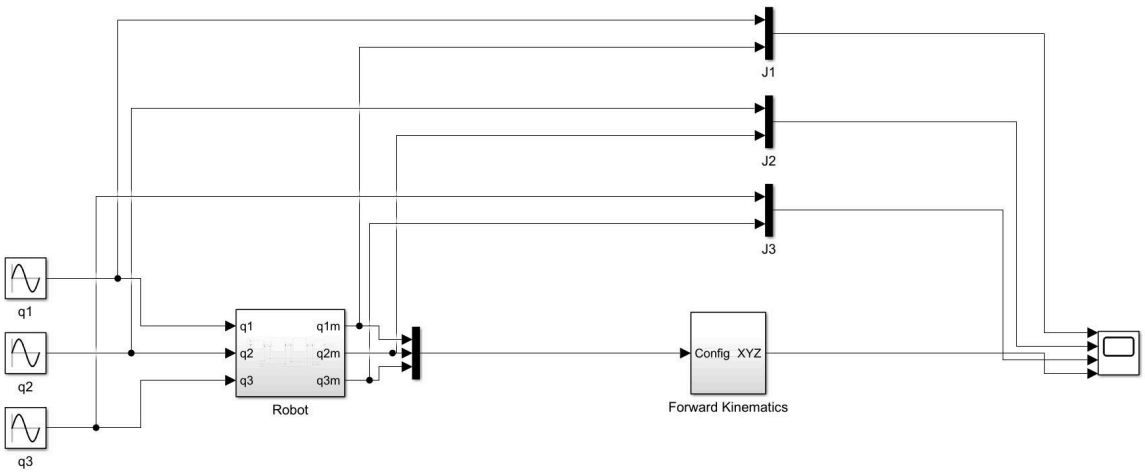

The X, Y, Z coordinates of the end effector at $\theta_1 = 0$, $\theta_2 = 0$, $\theta_3 = 0$ are validated with a Scope as shown below:

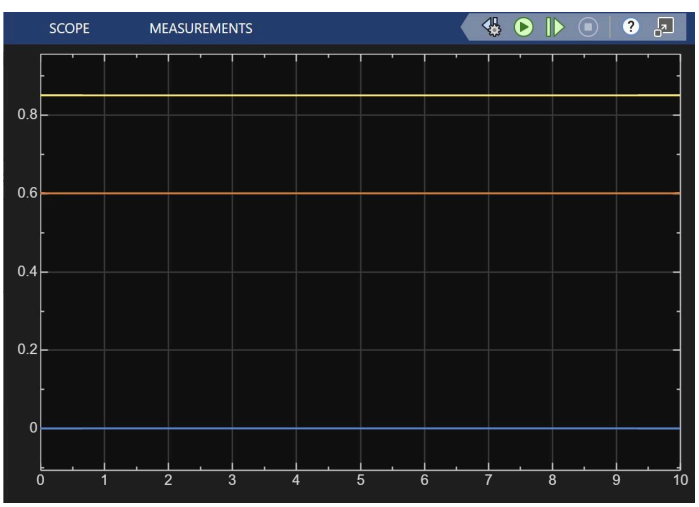

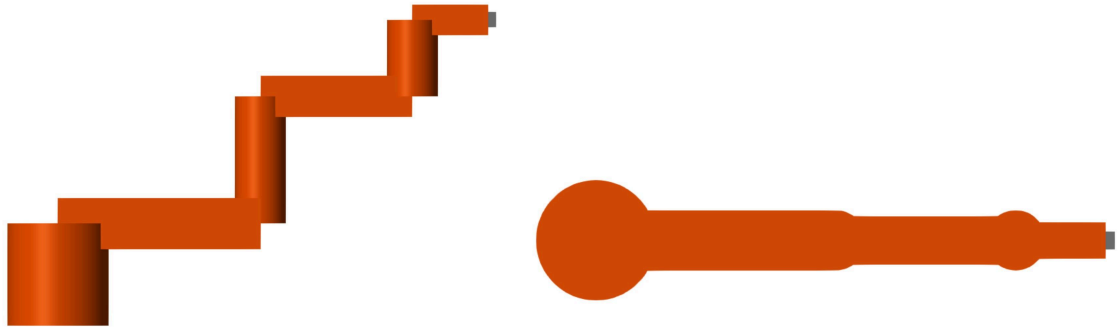

The X, Y, Z coordinates of the end effector at θ_1 = 10° , θ_2 = 15°, θ_3 = 20° are validated with a Scope as shown below:

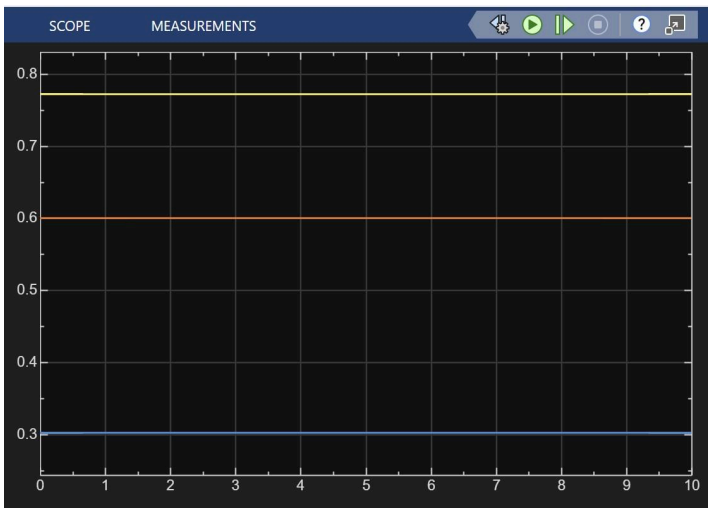

Please note Yellow = X, Blue = Y, Orange = Z.

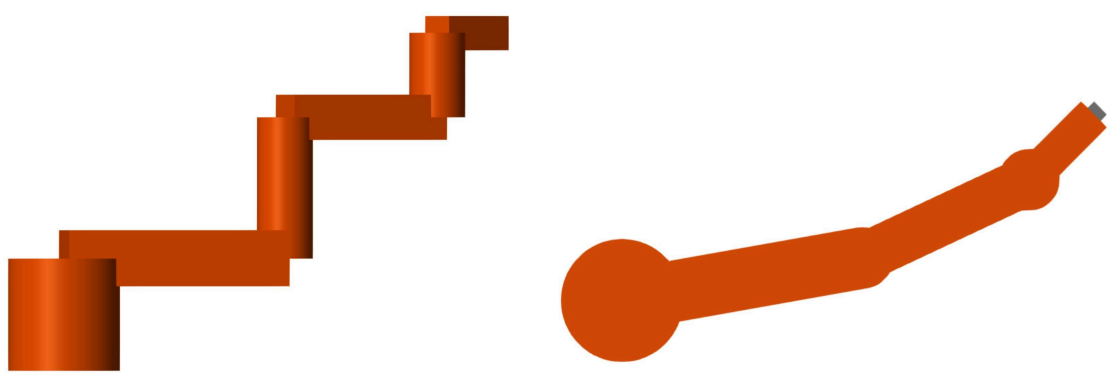

Q3) Inverse Kinematics Simulation

Based on the physical dimensions and kinematic model of the SCARA robot the Z coordinate remains constant regardless of the joint rotations. The Z coordinate of the end effector's position at any point in the workspace is **0.6 m**.

The Z position is the sum of the d_i parameters from our DH table:

Z = d_1 + d_2 + d_3 = 0.2 m + 0.25 m + 0.15 m = 0.6 m

The point X=0.7719, Y=0.3023 and Z=0.6 was selected within the workspace of the robot. The Z-coordinate of the SCARA robot remains constant at Z=0.6. The inverse kinematics problem was then formulated by setting the forward kinematics equations for X, Y and Z equal to the selected coordinates and solving the resulting equations for the joint angles θ_1 , θ_2 and θ_3 using MATLAB.

```
Inverse Kinematics Solution
---------------------------
Target Position:
X = 0.7719 m
Y = 0.3023 m
Z = 0.60 m (constant)

Joint Angles:
theta1 = 10.01 deg
theta2 = 14.98 deg
theta3 = 20.01 deg
```

Computational Note: *These values were verified using the attached MATLAB script* ***IK_targetpos.m.***

Coordinates chosen for the square trajectory:

P_1 = (0.32, 0.32, 0.60)

P_2 = (0.08, 0.32, 0.60)

P_3 = (0.08, 0.08, 0.60)

P_4 = (0.32, 0.08, 0.60)

The following is a gif of the robot moving in a square: robotgif.gif
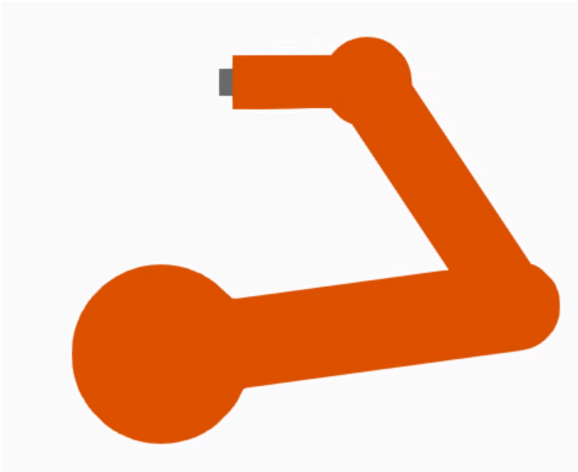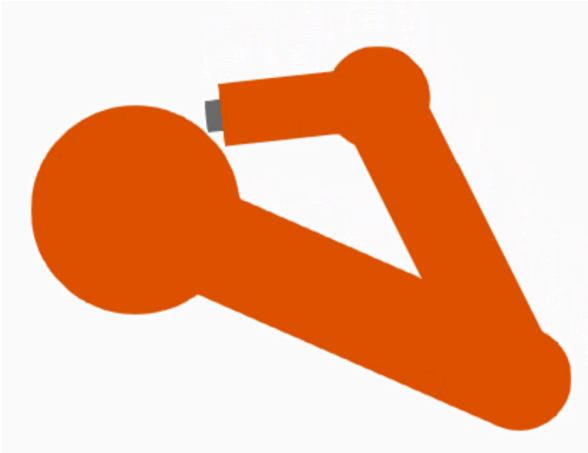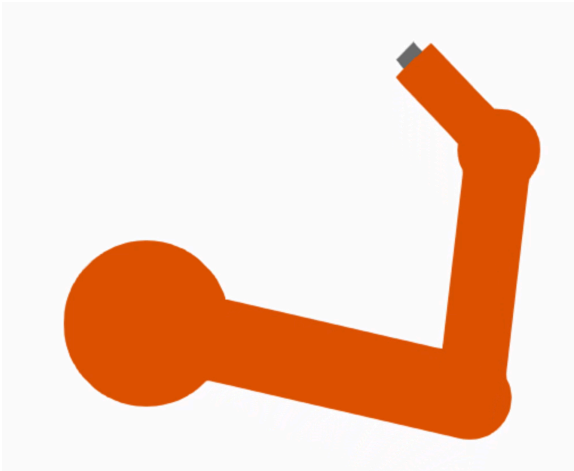
The inverse kinematics controller was used to drive the end effector along a square trajectory in Cartesian space. The photo below shows 4 snapshots (4 corners) of the robot motion during the execution of the trajectory. The end effector successfully follows the four edges of the square defined by the desired Cartesian coordinates.