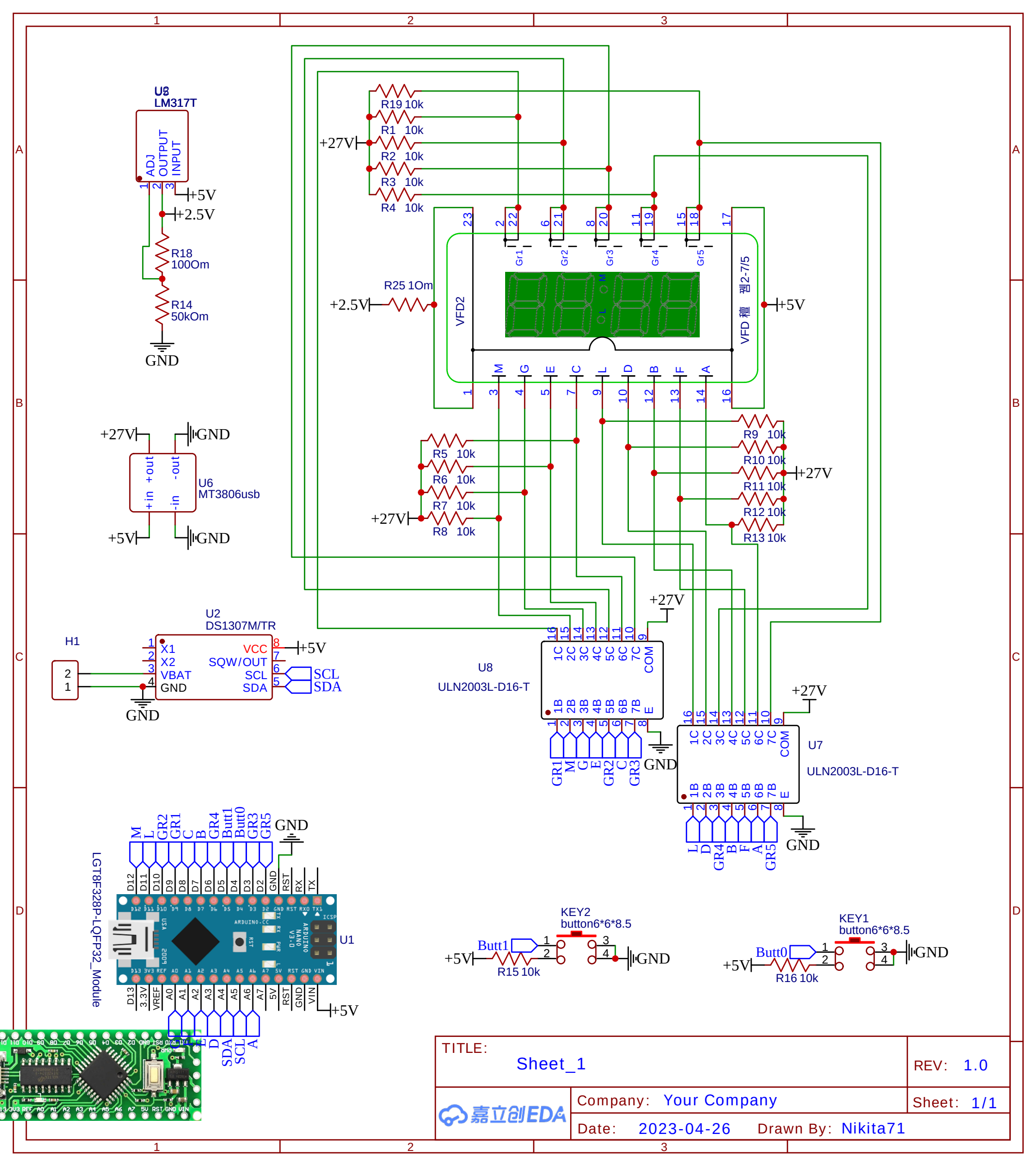

TITLE: Sheet_1	REV: 1.0
嘉立创EDA	Company: Your Company
	Sheet: 1/1
	Date: 2023-04-26 Drawn By: Nikita71