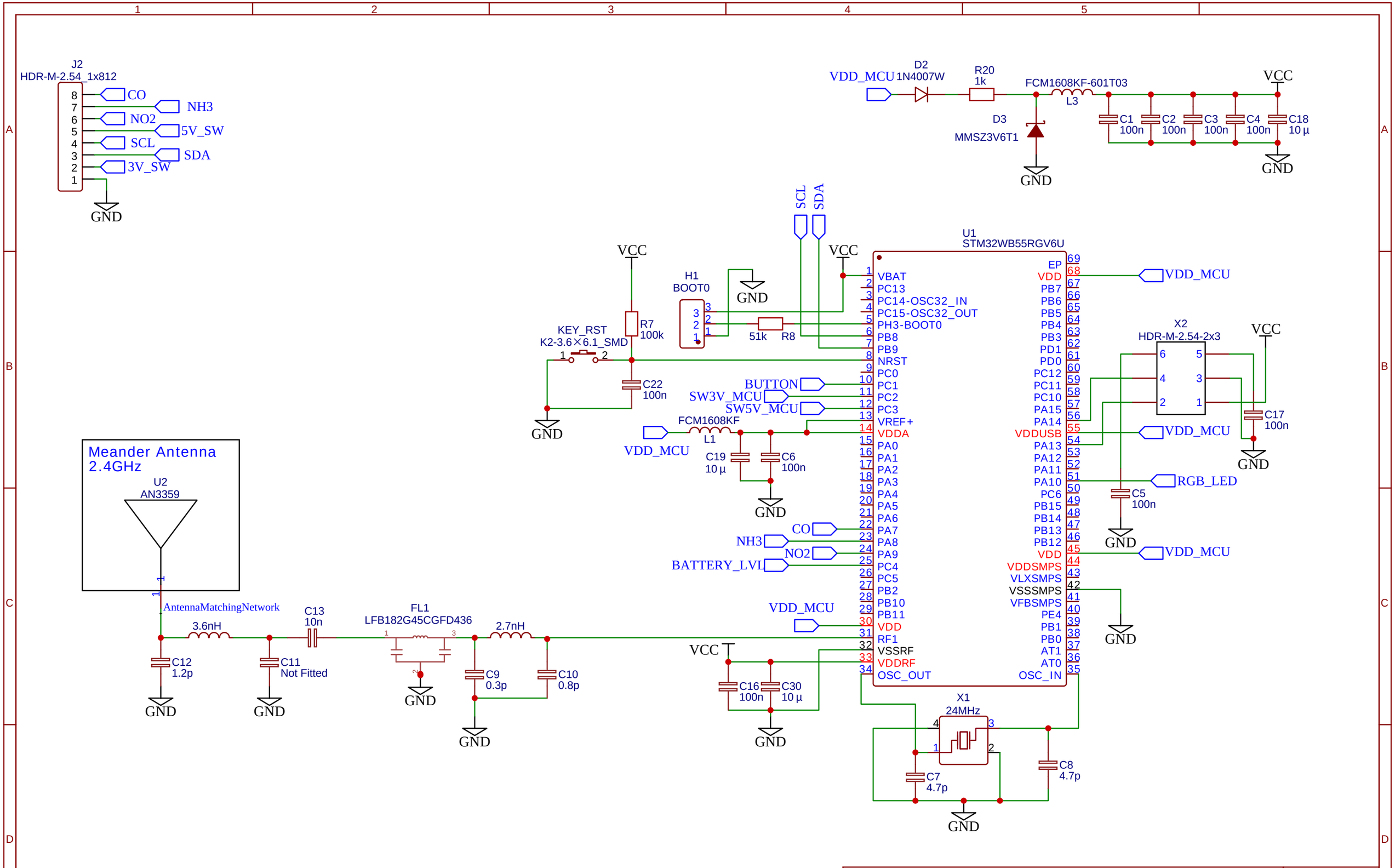

TITLE: MCU and power filtering	REV: 1.0
Company: MUNI MASTER DIPLOMA	Sheet: 1/4
Date: 2022-01-01 Drawn By: Mikita Valatovich	