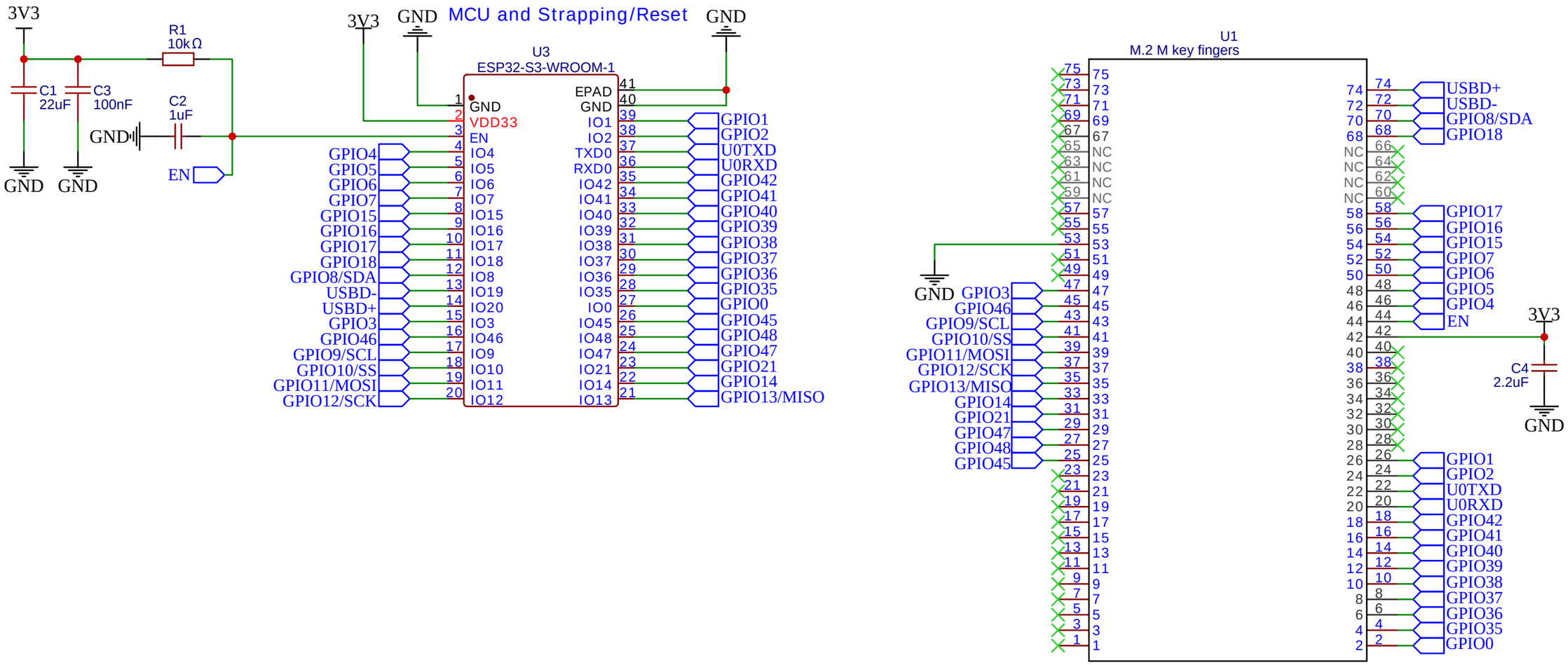

https://dl.espressif.com/dl/SCH_ESP32-S3-DEVKITC-1_V1_20210312C.pdf
https://docs.espressif.com/projects/esp-idf/en/latest/esp32s3/hw-reference/esp32s3/user-guide-devkitc-1.html
https://eu.mouser.com/datasheet/2/891/Espressif_ESP32_S3_WROOM_1_1U_Preliminary-2530171.pdf

TITLE: S3 full / WROOM-1 w ESP32-S3 & ESP32-S3R16	REV: 1.1
Company: PantelinEngineering	Sheet: 1/1
Date: 2023-11-16 Drawn By: Nikola Pantelin	