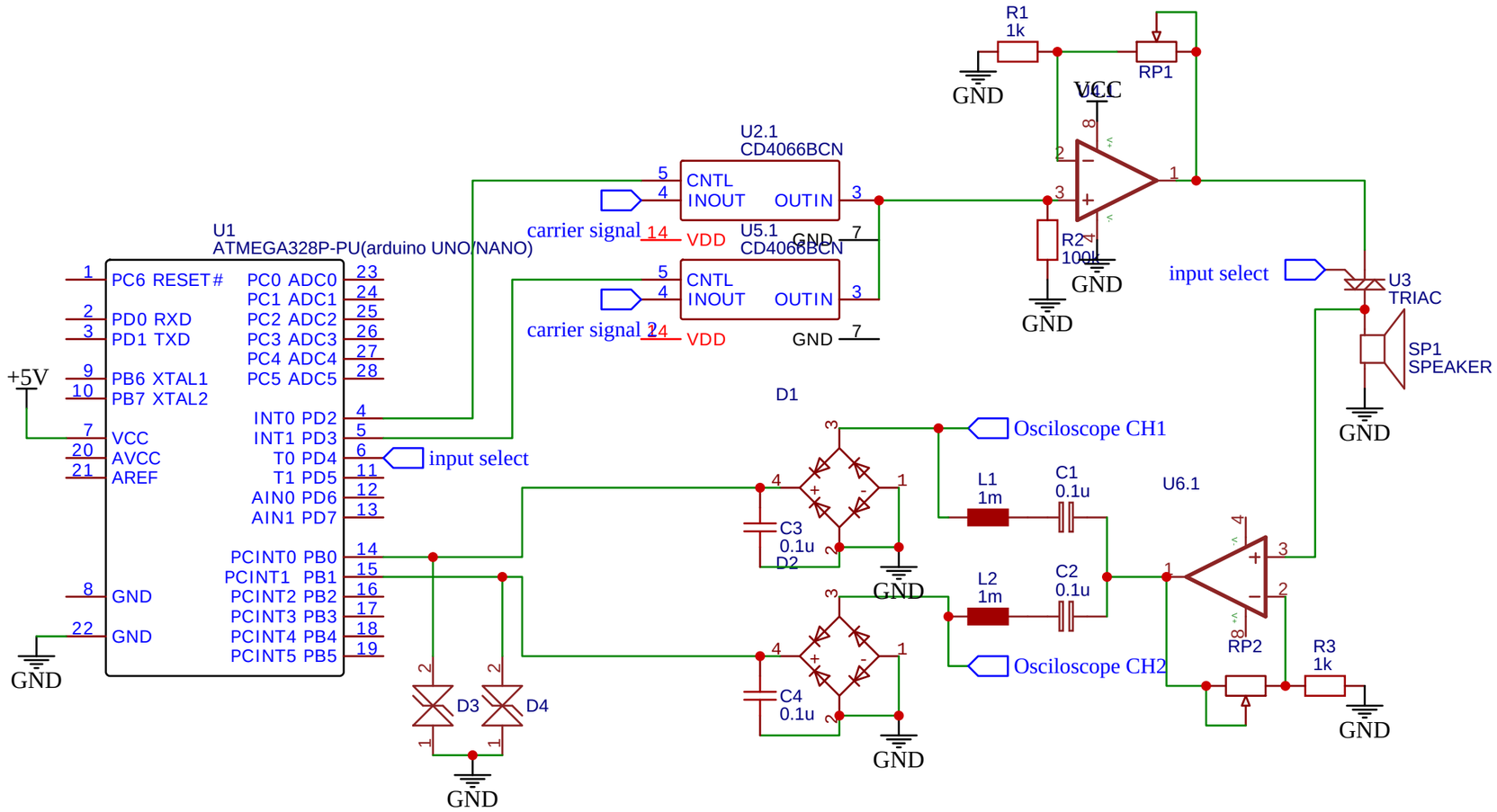

TITLE: Sheet_1		REV: 1.0
EasyEDA	Company: Your Company	Sheet: 1/1
	Date: 2021-06-24 Drawn By: nikola ristanovic	

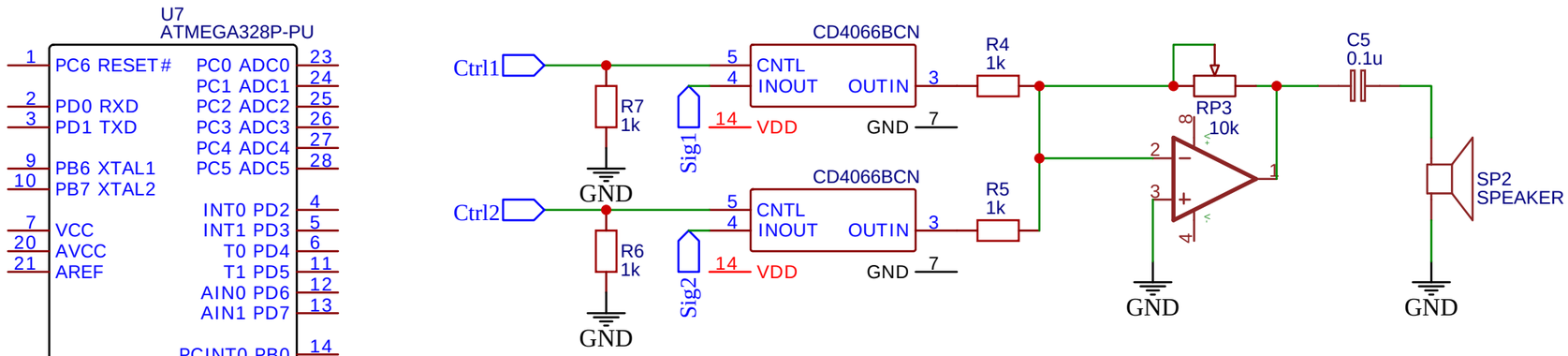

TITLE: Sheet_2		REV: 1.0
EasyEDA	Company: Your Company	Sheet: 1/1
	Date: 2021-06-28 Drawn By: nikola ristanovic	

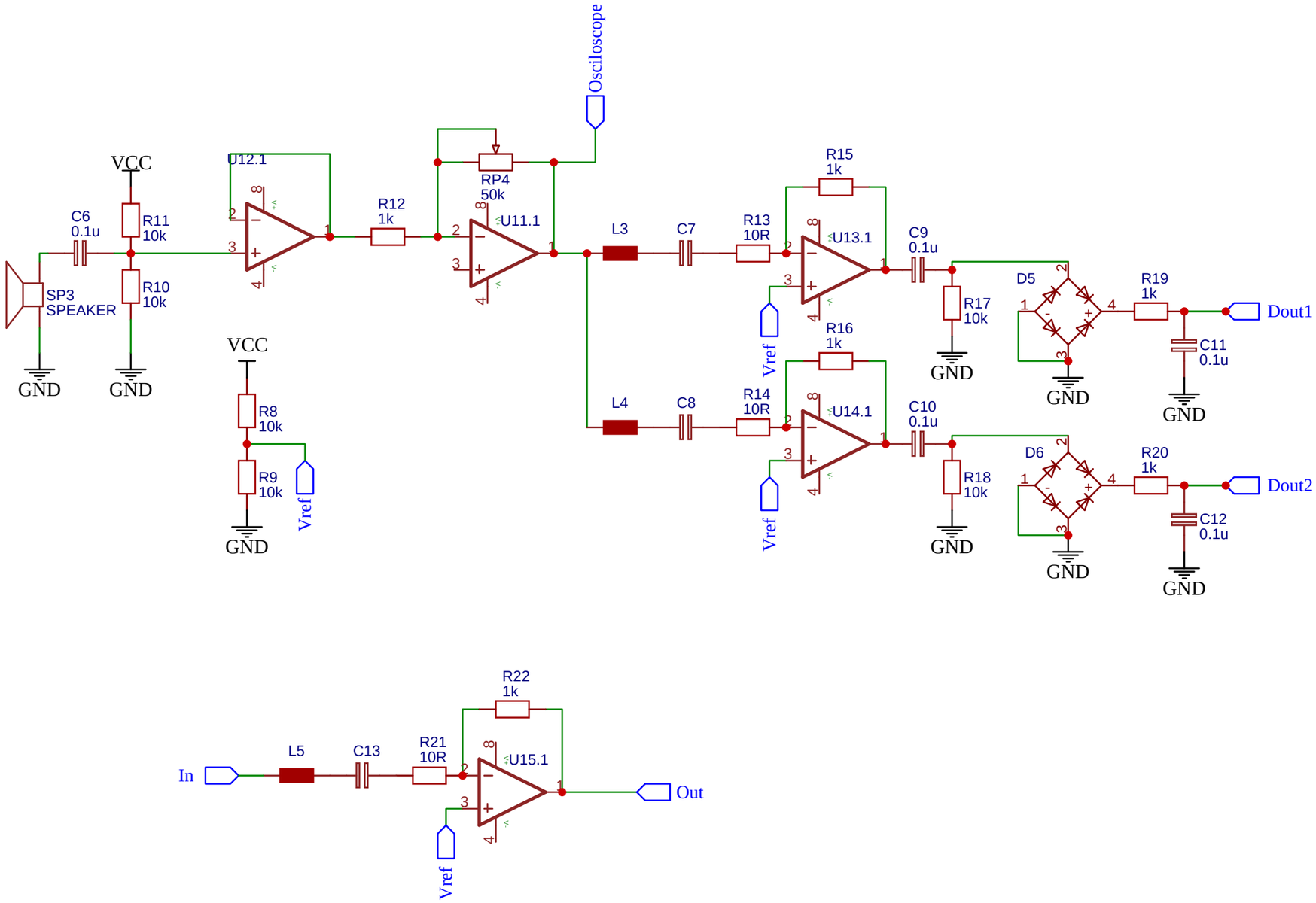

TITLE: Sheet_3		REV: 1.0
EasyEDA	Company: Your Company	Sheet: 1/1
	Date: 2021-06-30 Drawn By: nikola ristanovic	