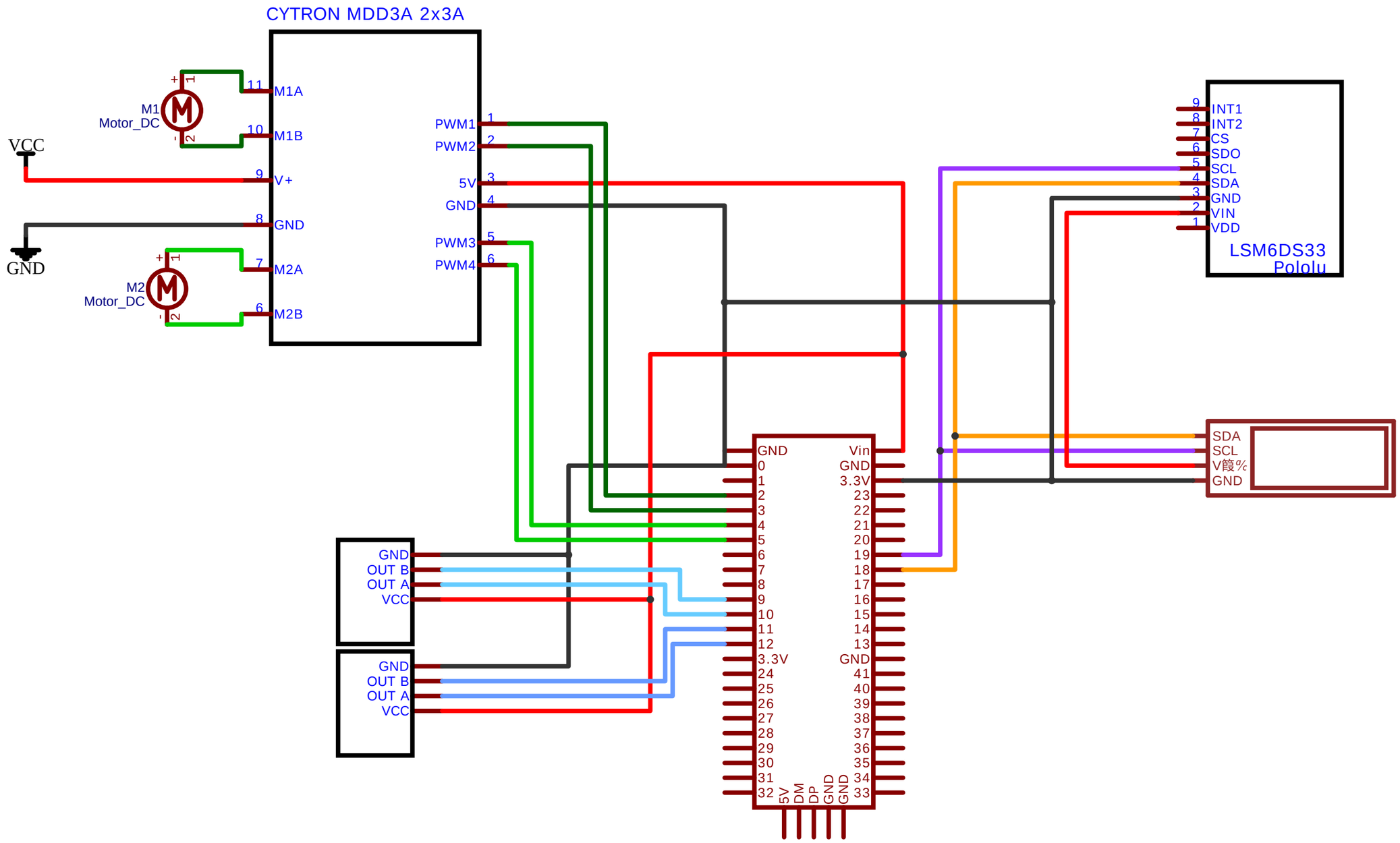

TITLE: Teensy BalanceBot Mk1	REV: 1.0
Company: Your Company	Sheet: 1/1
Date: 2021-01-18 Drawn By: Nikola Totev	