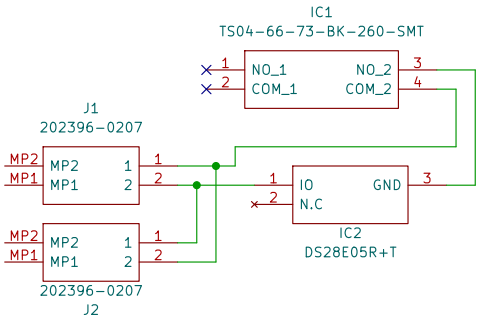

Sheet: /
File: back_button_v1.kicad_sch

Title:

Size: A4	Date:	**Rev:**
KiCad E.D.A. kicad (6.0.4)		Id: 1/1