Constructor University Bremen

Natural Science Laboratory
Electronics

Fall Semester 2025

Lab Experiment 3 – Bipolar Junction Transistor (BJT)

Data Experiment 4 – Properties of the Differential Amplifier

Author of the report Mr. Nikoloz Burduli

Experiment conducted by	: Mr. Nikoloz Burduli, Mr. Thushar Venkataramanaiah, Mr Jamal Salimov.
Place of execution	: Teaching Lab 53
Date of execution	: October 27, 2025

1. Introduction

The goal of this experiment was to study the characteristics and behavior of a Bipolar Junction Transistor (BJT) and understand how it operates in different modes. The experiment focused on a common-emitter BJT circuit, where the transistor was used as an amplifier. Through simulations and practical measurements, the output characteristics, voltage gain, frequency response, and phase relationship between input and output signals were examined.

The BJT is a three-terminal semiconductor device widely used in both discrete and integrated circuits. It plays a key role in analog applications such as amplifiers, especially those requiring high speed. The transistor can operate in three main regions: active, cut-off, and saturation. For amplification, it must work in the active region, while in digital circuits it switches between cut-off and saturation.

The experiment was divided into several parts. The pre-lab section involved simulating and analyzing the circuits. Part 1 introduced the transistor's structure and methods to identify its terminals and type. In Part 2, the biasing of the transistor was tested and measured. Part 3 demonstrated the transistor's ability to amplify small signals and showed how increasing the input amplitude introduced harmonics and distortion. Part 4 studied how the amplifier's voltage gain changes with frequency, helping determine the bandwidth of the circuit. All observations, calculations, and conclusions are presented and discussed in this report.

1.1 Prelab Problem 1 – Biasing of Bipolar Junction Transistors

Implemented circuit using LTSpice:

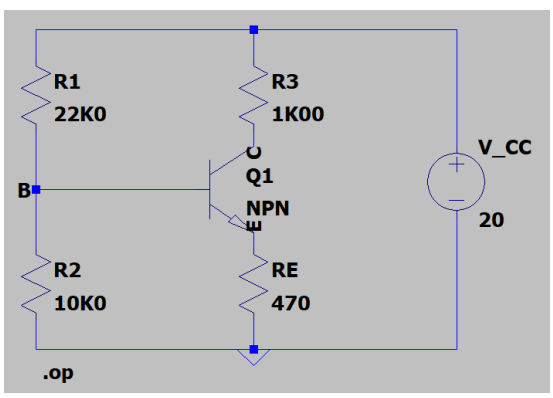

Figure 1: LTSpice Circuit for Prelab Problem 1

```
--- Operating Point ---

V(b):          5.5648          voltage
V(c):          10.0335         voltage
V(e):          4.7311          voltage
V(n001):       20              voltage
I(R1):         0.000656145     device_current
I(R2):         0.00055648      device_current
I(R3):         0.00996651      device_current
I(RE):         0.0100662       device_current
I(V_CC):       -0.0106227      device_current
Ib(Q1):        9.96651e-05     device_current
Ic(Q1):        0.00996651      device_current
Ie(Q1):        -0.0100662      device_current
```

Figure 2: Operating Point Extracted Values

1. Calculate V_B, V_E, V_{CE} *and* V_C.

2. Calculate I_B, I_E *and* I_C.

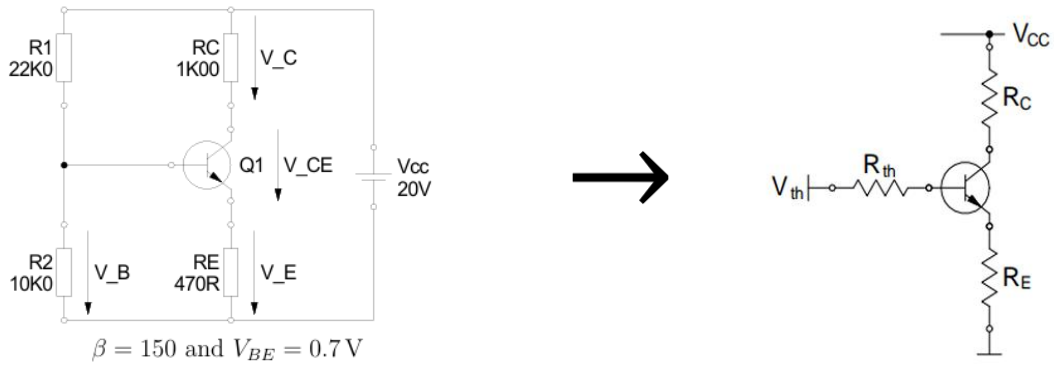

$$R_{th} = \frac{R_1 R_2}{R_1 + R_2} = \frac{22 \times 10 \times 10^6}{(22 + 10) \times 10^3} = 6875\ \Omega$$

$$V_{th} = V_{CC}\frac{R_2}{R_1 + R_2} = \frac{22 \times 10 \times 10^3}{(22 + 10) \times 10^3} = 6.25\ V$$

$$V_{th} = I_B R_{th} + V_{BE} + I_E R_E = I_B(R_{th} + (\beta + 1)R_E) + V_{BE}$$

$$V_{CC} = I_C R_C + V_{CE} + I_E R_E = I_C\left(R_C + \frac{R_E}{\alpha}\right) + V_{CE}$$

$$\boldsymbol{I_B} = \frac{V_{th} - V_{BE}}{R_{th} + (\beta + 1)R_E} = \frac{6.25 - 0.7}{3875 + 470(150 + 1)} = 7.13 \times\ 10^{-5}\ A$$

$$\boldsymbol{I_C} = \beta \times I_B = 150 \times 7.13 \times 10^{-5} = 1.07 \times 10^{-2}\ A$$

$$\boldsymbol{I_E} = I_B + I_C = 7.13 \times 10^{-5} + 1.07 \times 10^{-2} = 1.077 \times 10^{-2}\ A$$

$$\alpha = \frac{I_C}{I_E} = \frac{1.07 \times 10^{-2}}{1.077 \times 10^{-2}} = 0.9935$$

$$\boldsymbol{V_{CE}} = V_{CC} - I_C\left(R_C + \frac{R_E}{\alpha}\right) = 20 - 1.07 \times 10^{-2}\left(1000 + \frac{470}{0.9935}\right) = 4.24\ V$$

$$\boldsymbol{V_E} = I_E \times R_E = 1.077 \times 10^{-2} \times 470 = 5.06\ V$$

$$\boldsymbol{V_B} = V_{BE} + V_E = 0.7 + 5.06 = 5.76\ V$$

Using the calculated values and the simulation results obtained from LTSpice, the following table was created to compare the results with each other.

Op/Points	Simulated	Calculated
V_B	5.5648 V	5.76 V
V_E	4.7311 V	5.06 V
V_CE	4.4017 V	4.24 V
V_C	10.0335 V	10.7 V
I_B	9.9665×10^{-5} A	7.13×10^{-5} A
I_E	1.00662×10^{-2} A	1.077×10^{-2} A
I_C	0.9967×10^{-2} A	1.07×10^{-2} A

Table 1: Operating Points Values Comparison

1.2 Prelab Problem 2 – Constant Current Source

Implemented circuit using LTSpice:

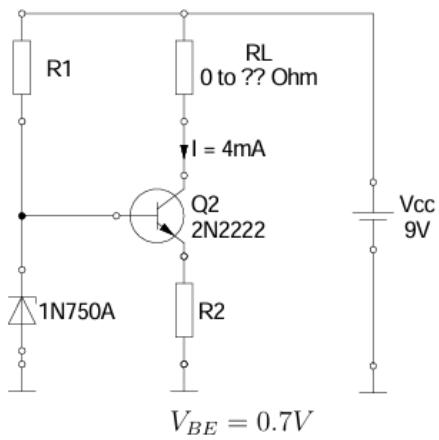

1. Find the values for R_1 and R_2 to get a constant current of $I_C \approx 4\ mA$.

2. What is the maximum value of R_L to still get $I_C \approx 4\ mA$?

3. Implement the circuit in LTSpice and verify your calculations. Use the .step command to vary R_L

4. Explain the function principle of the circuit.

1N750A Zener diode values from datasheet:

$$V_Z = 7.4\ V \quad and \quad I_Z = 10\ mV$$

Based on these values, the following calculations were performed:

$$R_1 = \frac{V_{CC} - V_Z}{I_Z} = \frac{9 - 4.7}{10 \times 10^{-3}} = 430\ \Omega$$

$$R_2 = \frac{V_B - V_{BE}}{I_C} = \frac{4.7 - 0.7}{0.4 \times 10^{-3}} = 1000\ \Omega$$

$$R_L = \frac{V_{CC} - V_E - V_{CE}}{I_C} = 1000\ \Omega$$

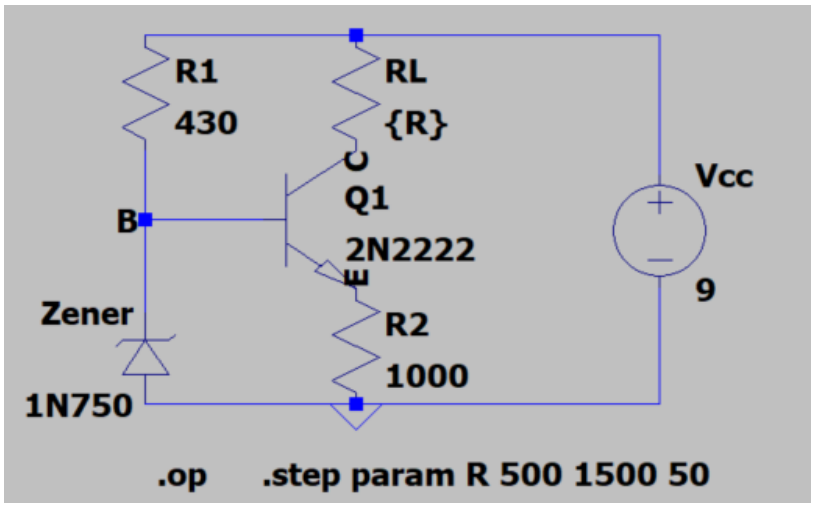

Figure 3: Implemented LTSpice Circuit

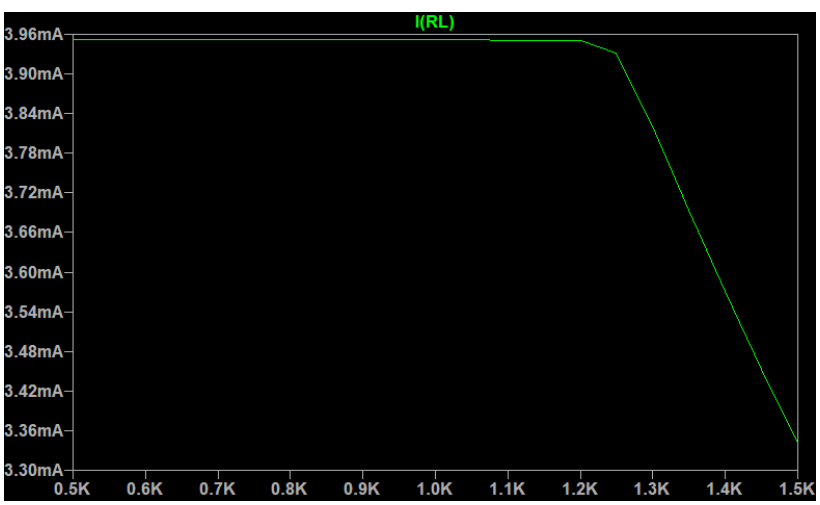

Figure 4: LTSpice Plot of I_C through the varied R_L

In a constant current source circuit, the collector current (I_C) remains nearly constant over a range of load resistances (R_L). This differs from a regular circuit, where I_C decreases as R_L increases. However, if R_L becomes too large and causes the collector-emitter voltage (V_{CE}) to drop below the minimum level required for the transistor to stay in the active region, the current source will no longer function properly, and I_C will begin to decrease.

From the plot above, it can be observed that the circuit operates correctly up to about R_L = 1200 Ω. Since the calculations were based on datasheet values of V_Z = 7.4 V and I_Z = 10 mA representing the worst-case conditions the calculated value of R_L = 1000 Ω lies within the valid operating range and is therefore confirmed.

A constant current source is designed to supply a steady current to a load, regardless of variations in load resistance (R_L) or supply voltage (V_{CC}). The Zener diode functions as a voltage regulator, keeping the output voltage constant despite changes in input voltage or load current. When the load voltage rises, the Zener draws more current through its series resistor, increasing the voltage drop across it and maintaining a stable voltage across the load. When the supply voltage decreases, the diode behaves in the opposite way to keep the load voltage constant.

The transistor adjusts its collector-emitter voltage (V_{CE}) to maintain a steady emitter current (I_E), which defines the collector current (I_C). As long as the transistor remains in the active region, the circuit delivers a fixed current to the load. However, when R_L becomes too large, the transistor moves into saturation or cutoff, and the constant current behavior is lost.

1.3 Prelab Problem 3 – Amplifier Circuit

Implemented circuit using LTSpice:

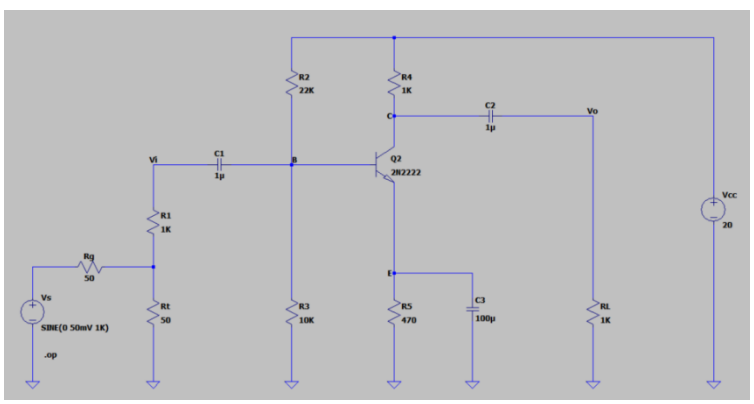

1. Determine the DC operation point values for $V_B, V_{BE}, V_C, V_{CE}, V_E, I_C$ *and* I_B.

2. Perform a transient analysis for about 2 cycles of a sinusoidal input signal. Use $V_S = 50\ mV$ input amplitude and $f = 1\ KHz$. Display V_i, V_B, V_{BE}, and the voltage across the load resistance V_O. Determine the voltage gain V_o/V_i.

3. Determine the quality of the amplified signal at V_o. Use the .step command to vary the amplitude V_S by 50mV, 100mV, and 200mV. Use a FFT or determine the harmonic distortion to give a statement.

4. Carry out an AC analysis. Set the AC amplitude to 50 mV. Vary the frequency from 100 Hz to 10 MHz with 10 points per decade and display the voltage across V_o.

5. Use the LTSpice '.MEASURE' command (see help file and example 'MeasureBW.asc') to determine the lower and upper −3dB frequencies and the bandwidth.

```
       --- Operating Point ---

V(b):          5.87379        voltage
V(c):          9.08868        voltage
V(e):          5.15404        voltage
V(n001):       20             voltage
V(n002):       0              voltage
V(n003):       1.46845e-16    voltage
V(vi):         6.02064e-15    voltage
V(vo):         9.08868e-15    voltage
I(C1):         5.87379e-18    device_current
I(C2):         -9.08868e-18   device_current
I(C3):         5.15404e-16    device_current
I(R1):         5.87379e-18    device_current
I(R2):         0.0006421      device_current
I(R3):         0.000587379    device_current
I(R4):         0.0109113      device_current
I(R5):         0.010966       device_current
I(RL):         9.08868e-18    device_current
I(Rg):         2.9369e-18     device_current
I(Rt):         2.9369e-18     device_current
I(Vcc):        -0.0115534     device_current
I(Vs):         2.9369e-18     device_current
Ib(Q2):        5.47214e-05    device_current
Ic(Q2):        0.0109113      device_current
Ie(Q2):        -0.010966      device_current
Is(Q2):        0              device_current
```

Figure 5: Operating Point Extracted Values

Op/Points	Values
V_B	5.87379 V
V_BE	0.71975 V
V_C	9.08868 V
V_CE	5.75728 V
V_E	5.15404 V
I_C	0.0109113 A
I_B	5.47214×10^{-5}

Table 2: Operating Points Values

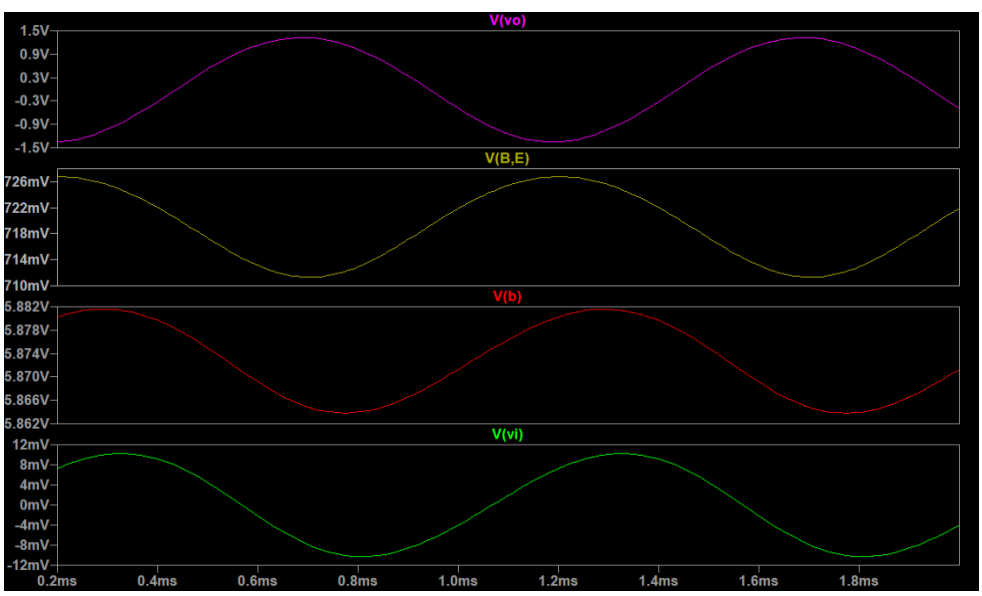

Figure 6: LTSpice Plot of V_i, V_B, V_{BE} and Vo,

Using the peak-to-peak values obtained from the cursor function, the voltage gain was calculated as:

$$Gain = \frac{V_o}{V_i} = \frac{2.6686146}{20.490715 \times 10^{-3}} = 130.235$$

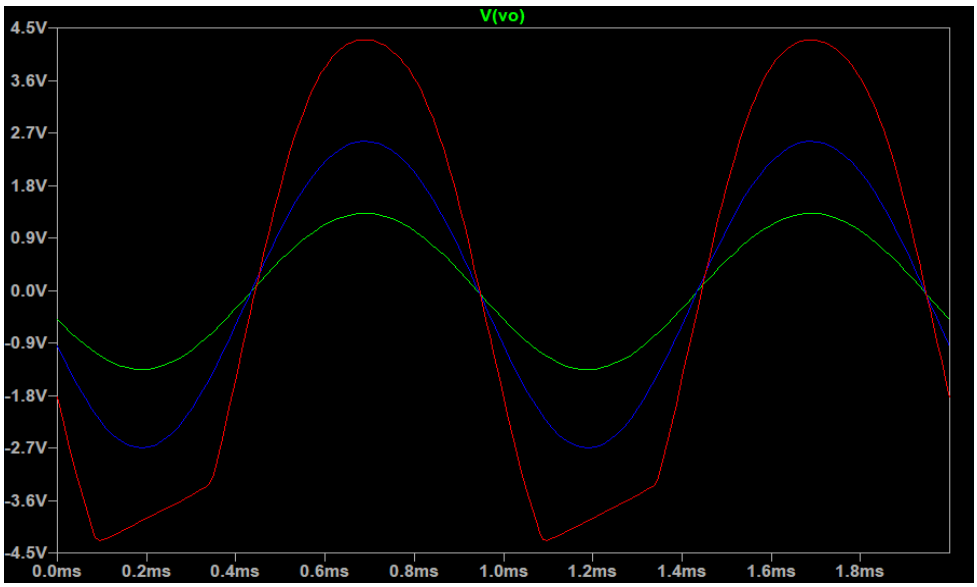

Figure 7: LTSpice Plot of Vo for varying value of V_S (50 mV, 100 mV and 200 mV)

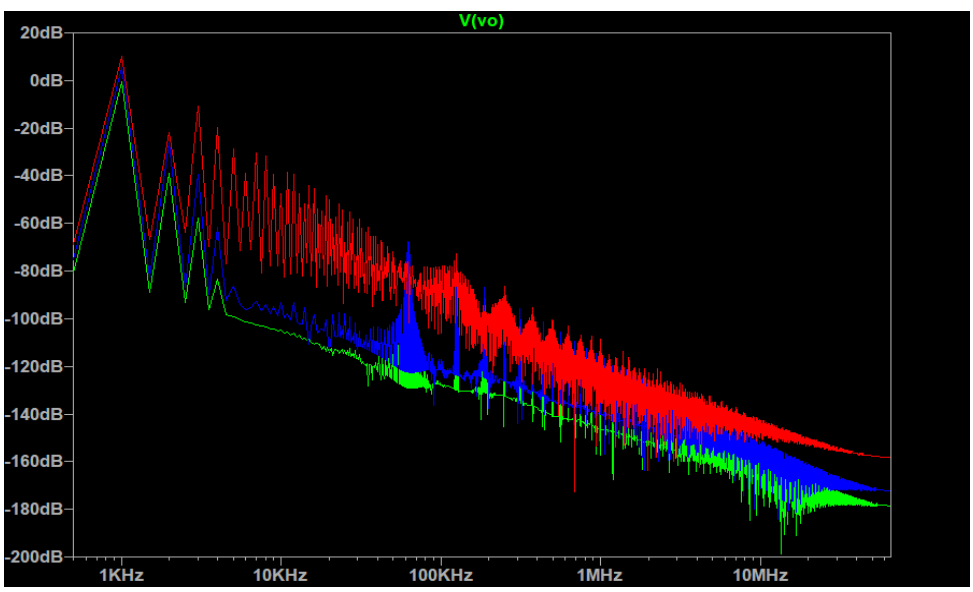

Figure 8: LTSpice FFT Plot for Harmonic Distortion

The total harmonic distortion (THD) was measured to be:

V_S	Harmonic Distortion
50mV	1.228304 %
100mV	2.740419 %
200mV	10.207185 %

Table 3: Calculated Harmonic Distortion for varying V_S

As the input voltage (V_S) increases, the distortion in the output signal becomes more noticeable. A higher V_S leads to stronger and more numerous harmonics appearing in the waveform. This happens because the transistor is pushed outside its linear region of operation, moving into saturation or cutoff. In this state, it can no longer amplify the input signal proportionally, which causes non-linear behavior and visible distortion. The effect can be clearly seen in the FFT spectrum, where additional higher-order harmonics emerge as the input amplitude rises.

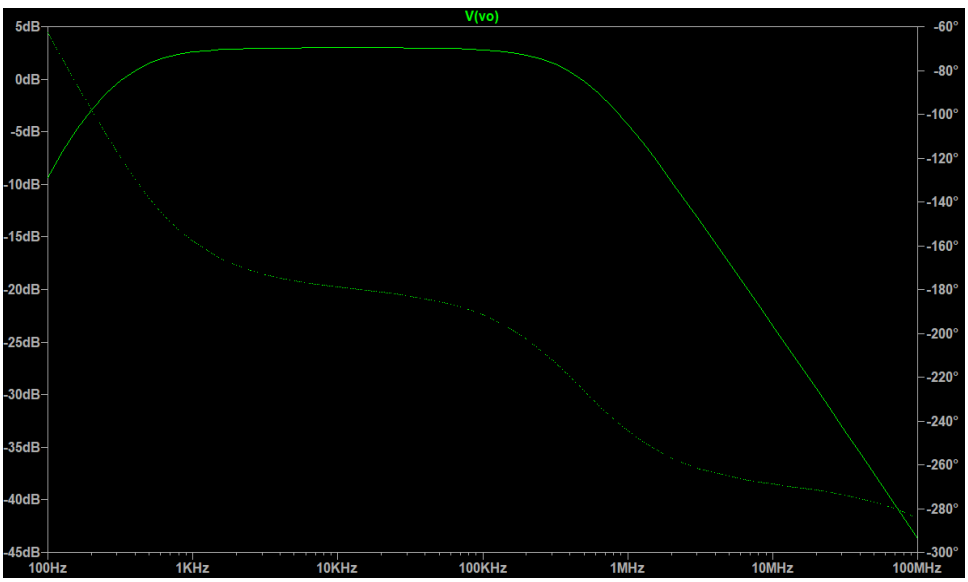

Figure 9: LTSpice Bode Plot of V_o

Finally, by using the .MEASURE command in LTSpice, the bandwidth was determined.

$$f_{low} = 327.546\ Hz$$

$$f_{high} = 478388.603\ Hz$$

$$BW = f_{high} - f_{low} = 478061.057\ Hz$$

2. Execution – Set-up and Results

Tools and Equipment

- 100µF and 2 x 1µF Capacitors
- 50Ω, 470kΩ, 10kΩ, 22kΩ and 1kΩ resistors
- Breadboard
- Oscilloscope for measurement
- Function Signal Generator

2.1 Problem 1 – Determine Type and Pin Assignment of a Bipolar Transistors

This part of the experiment aimed to understand the basic construction of the BJT and to identify its terminals and type, which were later needed for the following experimental steps.

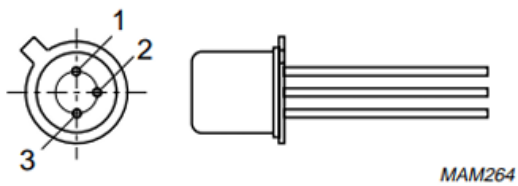

Figure 10: BJT schematics

The BJT used in this part of the experiment was taken from the component kit. Its pin layout was identified as shown in the reference image, and the transistor was then placed on the breadboard for testing. The measurements were taken using a multimeter set to the diode test mode, and all results were recorded and summarized in tables created for this purpose. These tables include the measured voltages between different pin pairs and the determined terminal types.

+ Terminal	Gnd terminal	Reading or .0L
1	2	.0L
2	1	0.7292 V
1	3	.0L
3	1	.0L
2	3	0.7269 V
3	2	.0L

Table 4: Values for every combination of two terminals

To identify the terminals, voltage readings were taken between various pairs of pins. The two pins that showed an overload ("OL") reading for both multimeter polarities were identified as the emitter and collector, while the remaining pin was determined to be the base. The junction with the lower measured voltage corresponded to the base–collector connection, and the higher value to the base–emitter junction.

To determine whether the transistor was NPN or PNP, voltage was applied alternately to the emitter and collector while the base was connected to ground. Because the multimeter displayed "OL" in both cases, indicating reverse-biased junctions, it was concluded that the transistor was of the PNP type.

Transistor type	NPN
Base terminal	2
Emitter terminal	1
Collector terminal	3

Table 5: Terminals of the BJT

2.2 Problem 2 – Operating point pf BJTs

The purpose of this section of the experiment was to verify the operation of the BJT and ensure that its biasing was correct for proper functioning in the active region during the later stages of the experiment.

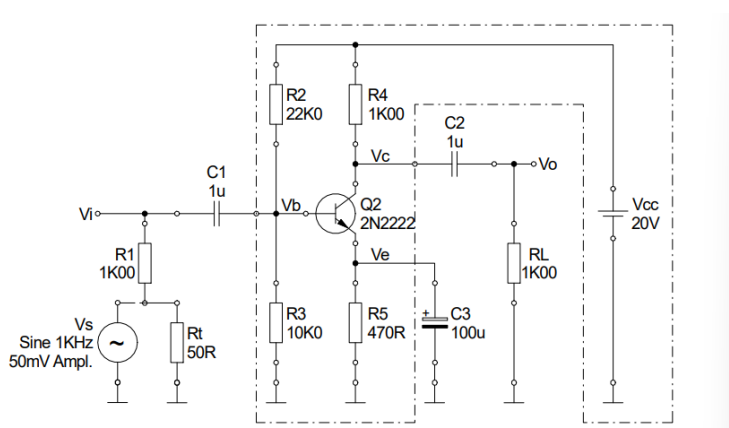

Figure 11: The Circuit for Problem 2

The circuit was assembled as illustrated in the corresponding figure. A supply voltage of 20 V was applied, and a multimeter was used to measure the voltages V_{CC}, V_B, V_{BE}, V_C, V_{CE}, and V_E. All measurements were carefully recorded and organized, and the following table was created to present the obtained results.

Op/Points	Volts(V)
V_CC	20.073
V_B	5.958
V_BE	0.66
V_C	8.85
V_CE	3.533
V_E	5.313

Table 6: Measured Operating pints of the BJT

2.3 Problem 3 – Common emitter Circuit

This part of the experiment demonstrated how the BJT amplifies a small input signal and how the output changes as the input amplitude varies. To better visualize this behavior, the FFT function was used, which clearly showed the appearance of additional harmonics when the input signal was increased.

The circuit used for this part of the experiment was the same as in the previous section, as shown in Figure 11.

Function Generator Settings:

Wave – Sine
Frequency – 1kHz
Amplitude – a) 50 mV, b) 100 mV, c) 200 mV

The circuit was fully assembled, with the generator settings as described earlier. Voltages V_S, V_i, and V_o were measured for input amplitudes of 50 mVpp, 100 mVpp, and 200 mVpp, and the results were recorded with hardcopies taken for documentation.

Next, the magnitudes of the first and second peaks in the FFT spectrum were measured using cursors at a 10 kS/s sampling rate. The input sine signal amplitude was again varied between 50 mVpp, 100 mVpp, and 200 mVpp, with the measurements recorded and hardcopies saved.

To minimize signal fluctuations and avoid triggering issues, the function generator's SYNC output and the oscilloscope's external triggering were used.

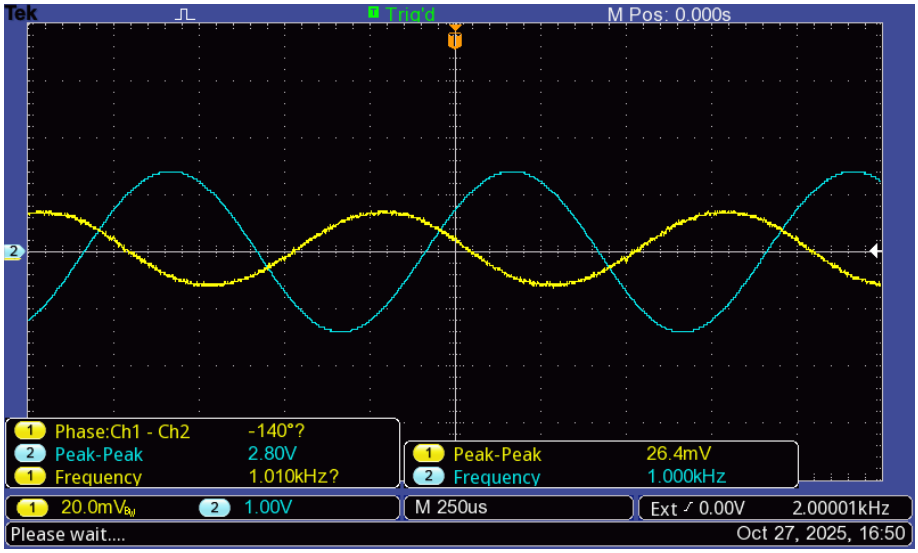

Figure 12: Measured value of f, V_i *and* V_O for V_S = 50 mVpp

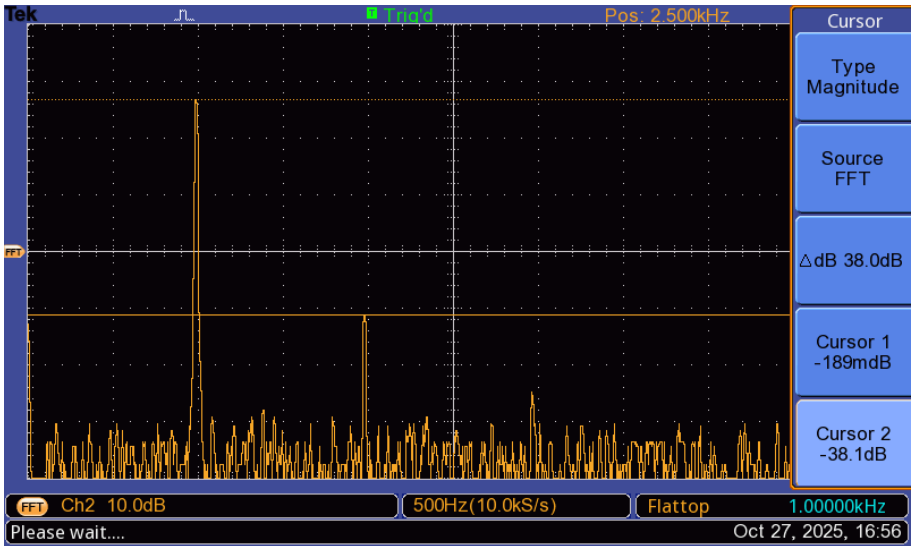

Figure 13: FFT of V_O for V_S = 50 mVpp

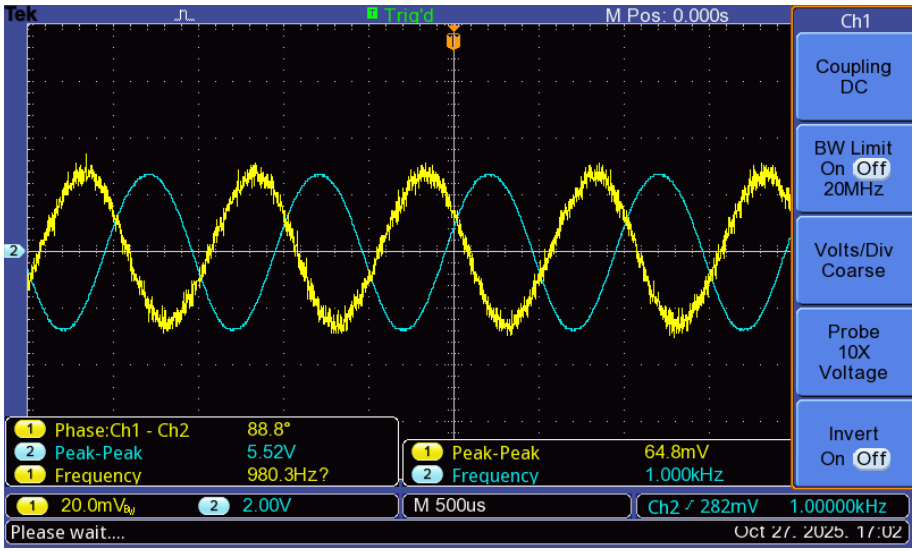

Figure 14: Measured value of f, V_i *and* V_O for V_S = 100 mVpp

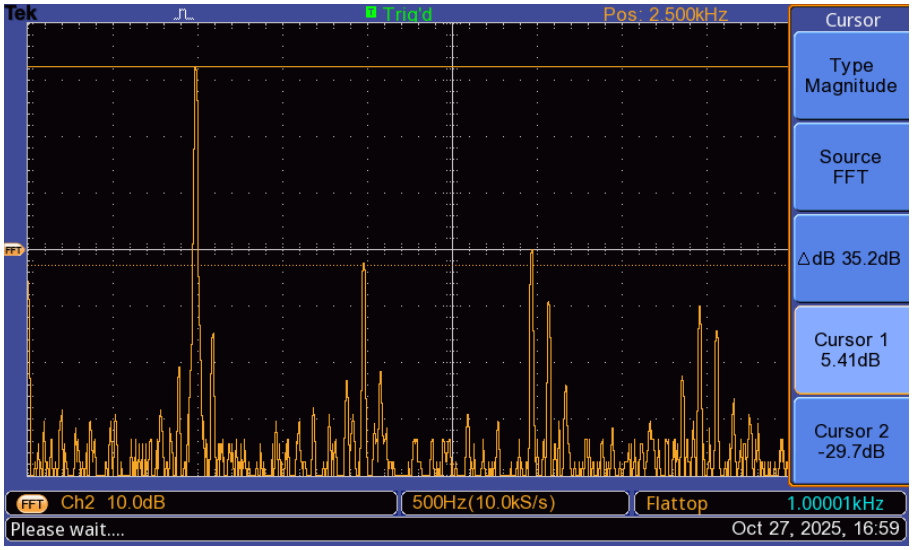

Figure 15: FFT of V_O for V_S = 100 mVpp

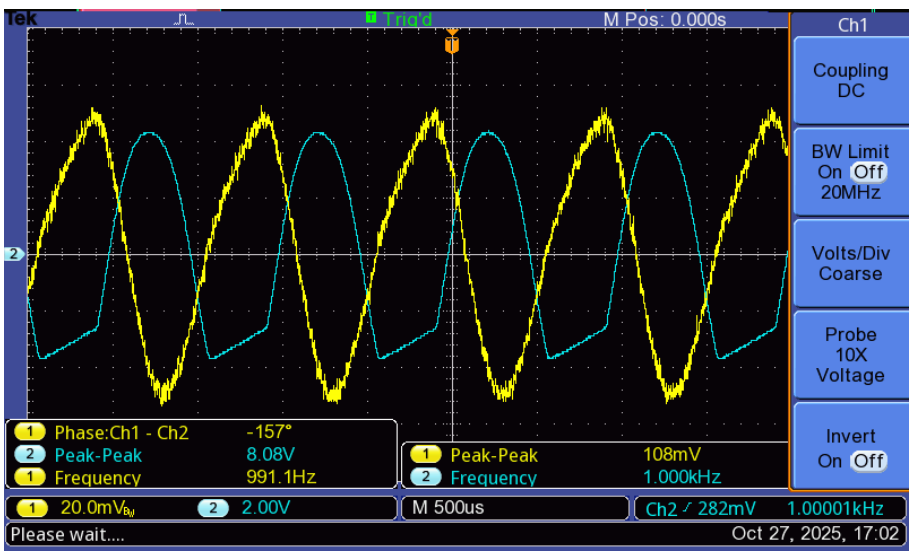

Figure 16: Measured value of f, V_i *and* V_O for V_S = 200 mVpp

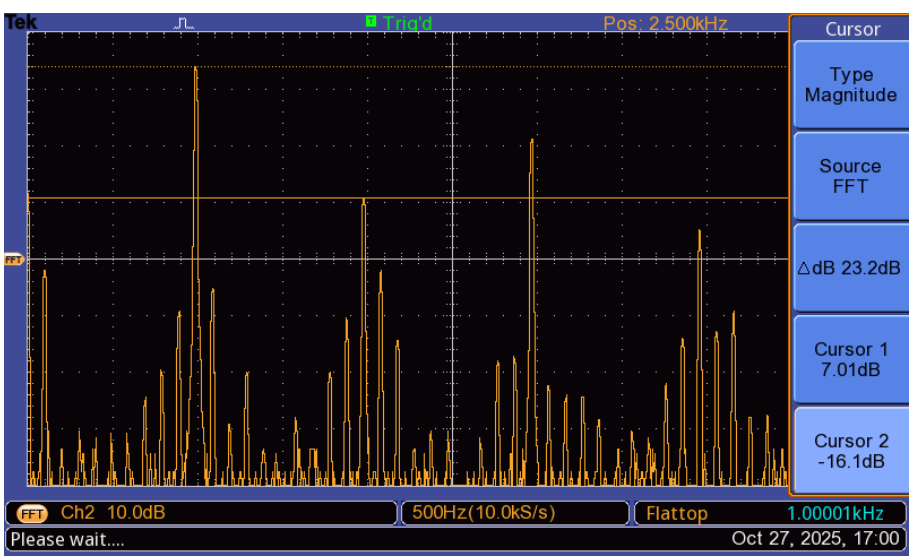

Figure 17: FFT of V_O for V_S = 200 mVpp

2.4 Problem 4 – Bandwidth of amplifier circuit

Part 4 of the experiment focused on examining the bandwidth of the BJT amplifier and observing how changes in the input signal frequency affect its voltage gain.

Function Generator Settings:

Amplitude – 50
START F: 100 Hz
STOP F: 1 MHz
SWP TIME: 500 ms
SWP MODE: Logarithmic

For this part of the experiment, the circuit configuration was kept the same as before. The function generator settings were the same as stated earlier, and its 'SYNC' output was used as the trigger source for the oscilloscope.

The oscilloscope was adjusted to display the full sweep of the output waveform, and a hardcopy of the result was taken. Afterward, the sweep mode on the function generator was turned off, and the frequency was manually varied to determine the lower and upper −3 dB cutoff frequencies.

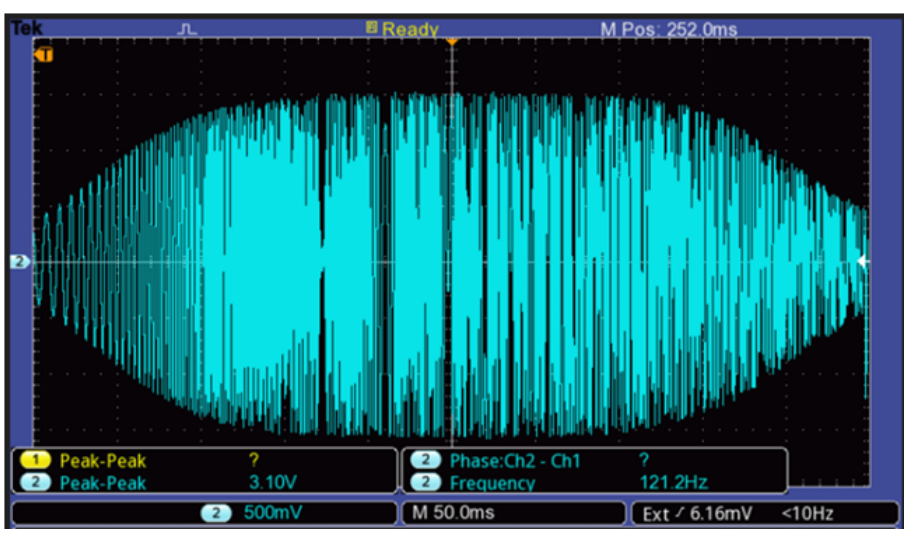

Figure 18: The Full sweep of the output signal

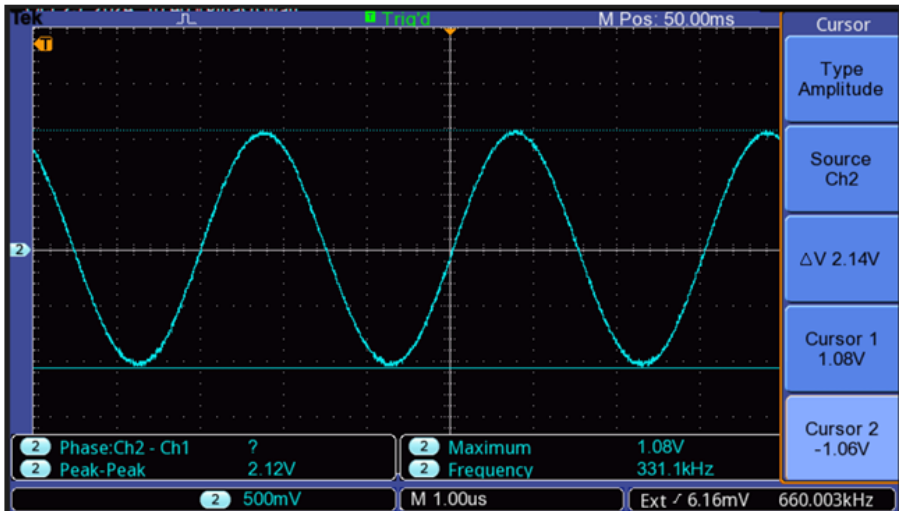

Figure 19: The higher -3dB cut-off frequency

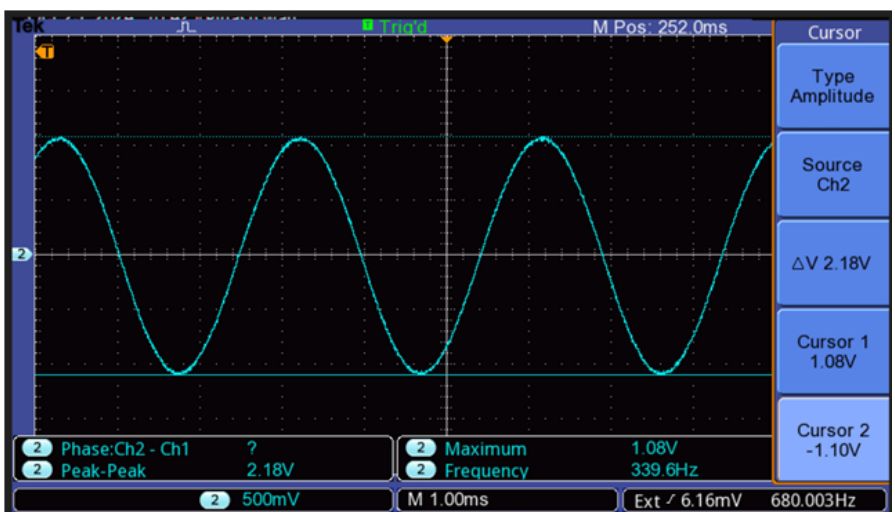

Figure 20: The lower -3dB cut-off frequency

Thus, the lower and upper -3 dB cutoff frequencies were determined to be:

$$The\ lower - 3dB\ cut - off\ frequency = 339.6\ Hz$$

$$The\ higher - 3dB\ cut - off\ frequency = 331.1\ kHz$$

3. Evaluation

3.1 Problem 1 – Determine Type and Pin Assignment of a Bipolar Transistors

A Bipolar Junction Transistor (BJT) can be thought of as two diodes connected back-to-back in opposite directions. When measuring directly between the emitter and collector (p-to-p or n-to-n), the multimeter displays "OL" (overload) for both polarities. This happens because there is no junction directly between these terminals that would allow charge carriers to move, and therefore no voltage is produced.

When measuring between the base and the emitter, or between the base and the collector, the multimeter shows a voltage reading only when the correct polarity is applied—that is, when the positive lead is connected to the p-type material and the negative lead to the n-type material. If the polarity is reversed, the diode becomes reverse-biased, blocking current flow and resulting in an "OL" reading.

For an NPN transistor, the collector and emitter are both n-type regions. Applying a positive voltage across these terminals in reverse polarity causes the base–emitter and base–collector junctions to be reverse-biased, widening their depletion regions and preventing current flow, which appears as an open circuit on the multimeter. In contrast, for a PNP transistor, the same positive voltage forward-biases the p–n junctions, allowing current to flow and producing a measurable forward voltage drop. This difference in behavior makes it possible to identify the transistor's type.

The emitter region in a BJT is the most heavily doped because it must supply charge carriers for the current flow through the device. The collector, on the other hand, is lightly doped to handle higher voltages safely by expanding its depletion region, which increases the breakdown voltage. Due to this difference in doping levels, the forward voltage drop across the base–emitter junction is greater than across the base–collector junction. This property was used to determine the transistor's terminals during the experiment.

3.2 Problem 2 – Operating point pf BJTs

Op/Points	Measured Value (V)	Simulated Value (V)	Calculated Value (V)
V_C	20.073	20	20
V_B	5.958	5.874	5.76
V_BE	0.66	0.7198	0.7
V_C	8.85	9.089	10.7
V_CE	3.533	3.935	4.24
V_E	5.313	5.154	5.06

Table 7: Comparison of Measured, Calculated and Simulated values

From the data presented in the table above, although the measured values fall within the expected range, some noticeable deviations are present. These differences arise from several possible sources of error related to the components, circuit setup, measuring instruments, and even software, as well as from reading or calculation inaccuracies.

Theoretical calculations assume that resistor, capacitor, and transistor parameters are ideal and exact. In practice, however, all components have manufacturing tolerances, which lead to slight variations in their actual performance and therefore in the circuit's output. The TENMA multimeter used in the experiment also has its own accuracy limits, and the input voltage readings were not perfectly precise, further contributing to measurement discrepancies. Additionally, parasitic resistance from wires, connectors, and the breadboard itself can influence the overall readings.

Another important factor is the non-ideal behavior of the transistor. The current gain (β) can differ from one device to another, even among transistors of the same model, which directly affects the measured amplification. BJTs are also temperature-sensitive an increase in temperature causes the base–emitter voltage (V_{BE}) to decrease and leakage currents to rise, both of which can alter the observed results.

$$R_{th} = \frac{R_1 R_2}{R_1 + R_2} = \frac{22 \times 10 \times 10^6}{(22 + 10) \times 10^3} = 6875\ \Omega$$

$$V_{th} = V_{CC} \frac{R_2}{R_1 + R_2} = \frac{20.05 \times 10 \times 10^3}{(22 + 10) \times 10^3} = 6.2656\ V$$

$$V_{th} = I_B R_{th} + V_{BE} + I_E R_E = I_B(R_{th} + (\beta + 1)R_E) + V_{BE}$$

$$V_{CC} = I_C R_C + V_{CE} + I_E R_E = I_C \left(R_C + \frac{R_E}{\alpha}\right) + V_{CE}$$

$$I_C = \beta I_B \rightarrow \quad \beta = \frac{I_C}{I_B}$$

$$I_C = \frac{V_C}{R_4} = \frac{8.85}{1000} = 8.85 \times 10^{-3}\ A$$

$$I_B = \frac{V_{th} - V_{BE} - V_E}{R_{th}} = \frac{6.2656 - 0.66 - 5.313}{6875} = 4.25 \times 10^{-5}\ A$$

$$\beta_{measured} = \frac{I_C}{I_B} = \frac{8.85 \times 10^{-3}}{4.25 \times 10^{-5}} = 208.23$$

$$\beta_{simulated} = \frac{I_C}{I_B} = \frac{10.9113 \times 10^{-3}}{5.47214 \times 10^{-5}} = 199.397$$

$$\frac{\beta_{measured} - \beta_{simulated}}{\beta_{simulated}} \times 100\% = \frac{208.23 - 199.397}{199.397} \times 100\% = 4.429\%$$

According to the 2N2222 transistor datasheet, the current gain (β) typically ranges from 100 to 300. The experimentally measured value and the one obtained from the simulation are quite close, with only a small deviation observed in the measured result. One key reason for this difference, as mentioned earlier, is temperature variation. While simulations generally assume constant conditions, real measurements are affected by temperature changes. As the temperature increases, the forward voltage drop (V_{BE}) decreases, which in turn influences the gain value.

It should also be noted that the BJT is a sensitive component and should not come into contact with other parts of the circuit, as this may affect its behavior. Additional errors may come from the circuit setup itself, including parasitic resistances and component tolerances. Moreover, the measuring instruments, such as the TENMA multimeter used in this experiment, have a limited accuracy range, which introduces another small source of deviation.

3.3 Problem 3 – Common emitter Circuit

When the input signal drives the transistor into saturation, the collector–emitter voltage decreases to a lower level. In this condition, the transistor can no longer increase the collector current, even if the input signal continues to rise. This results in positive amplitude distortion, where the upper peaks of the output waveform become clipped. Conversely, when the input signal is too small, the base–emitter junction becomes reverse-biased, causing the transistor to enter the cutoff region. In this state, the collector current drops to zero, the output voltage moves toward the supply voltage, and negative amplitude distortion occurs as the lower peaks of the waveform are clipped.

From both the theoretical background and the experimental data, it can be concluded that the voltage is clipped at low values when the transistor operates in saturation. This distortion of the positive amplitude can be clearly seen in the recorded output waveform.

The voltage gain, based on the measured values, was calculated as:

$$A_{measured} = \frac{V_o}{V_i} = \frac{2.8}{26.4 \times 10^{-3}} = 106.0606 \ldots$$

$$A_{simulated} = \frac{V_o}{V_i} = \frac{2.6686146}{20.490715 \times 10^{-3}} = 130.235$$

It can be observed that there is a noticeable difference between the measured and simulated values of the voltage gain. Several factors may have contributed to this discrepancy, including parasitic

resistances within the circuit and its components, element tolerances, and the non-ideal behavior of real components. Additional sources of error include inaccuracies in the function generator and oscilloscope, limitations in resolution, reading and calculation errors, as well as variations in the specific BJT used and its characteristics in the experimental setup.

From the captured waveforms, it can be seen that the output voltage is both amplified and inverted relative to the input signal, indicating a 180° phase shift between them. This behavior occurs because the collector current is directly related to the base current, creating a larger voltage drop across the load resistor and producing a negative output voltage.

As the input voltage was increased, additional harmonics appeared in the output signal due to distortion. When the amplifier is driven beyond its linear operating range, it behaves non-linearly, preventing the output from maintaining the same waveform shape as the input. In contrast, smaller input signals were accurately amplified. Therefore, when a higher input amplitude (V_S) was applied, the resulting waveform showed clear distortion and new harmonic components, a trend confirmed by both the simulated FFT and the FFT obtained from oscilloscope measurements.

3.4 Problem 4 – Bandwidth of amplifier circuit

The circuit demonstrates the characteristics of a bandpass filter, as seen from the recorded output waveforms — the amplifier's gain decreases at both low and high frequencies. The reduction in gain at low frequencies occurs mainly due to the coupling and bypass capacitors in the circuit, which restrict low-frequency signals. At higher frequencies, a similar drop in gain happens because of the internal capacitances of the BJT, which are amplified by the transistor's voltage gain. This combination limits the high-frequency response and reduces the overall gain of the amplifier at the extremes of the frequency range.

$$f_{low-measured} = 339.6\ Hz$$

$$f_{high-measured} = 331.1\ kHz$$

$$BW_{measured} = f_{high-measured} - f_{low-measured} = 331.1 \times 10^{-3} - 339.6 = 330760.4\ Hz$$

$$f_{low-simulated} = 327.546\ Hz$$

$$f_{high-simulated} = 478388.603\ Hz$$

$$BW_{simulated} = f_{high-simulated} - f_{low-simulated} = 478388.603 - 327.546 = 478061.057\ Hz$$

Based on the recorded waveforms, it can be concluded that the amplifier circuit exhibits bandpass filter characteristics. From the comparison table, it is evident that while the measured values remain within the expected range, a noticeable deviation exists—particularly at the higher cutoff frequency. The lower cutoff is mainly influenced by the circuit's capacitances, whereas the upper

cutoff frequency is affected by all circuit components and their combined behavior. The transistor's non-ideal characteristics, which are not fully represented in the simulation, also contribute to this difference. Additionally, manual determination of the cutoff frequencies using the oscilloscope introduced possible reading errors. Other contributing factors include parasitic resistance and capacitance, component tolerances, instrument accuracy limits, and the effect of temperature on transistor performance.

4. Conclusion

In this experiment, the characteristics and behavior of the Bipolar Junction Transistor (BJT) were studied through several practical and simulated tests.

The first part focused on understanding the structure of the transistor and identifying its type and terminals. Based on the diode testing results and semiconductor principles, the transistor used was confirmed to be an NPN type, with Base, Emitter, and Collector correctly identified for further use in the experiment.

In the second part, the transistor's biasing was verified to ensure proper operation in the active region. The measured and simulated values were compared, and the current gain was found to be $\beta_{measured} = 208.23$ and $\beta_{simulated} = 199.397$. These values are within the datasheet range of 100–300 for the 2N2222 transistor. The calculated percentage error of 4.429% indicates a good level of accuracy considering various error sources, such as the transistor's non-ideal behavior, temperature sensitivity, and component tolerances, which were discussed in the evaluation section.

The third part investigated the common-emitter amplifier circuit. Both simulation and lab measurements confirmed that when the input signal amplitude was increased, the output waveform exhibited distortion, and additional harmonics appeared in the FFT spectrum. This behavior indicated that the transistor entered saturation. The voltage gain was determined as $Av_{measured} = 106.0606$ and $Av_{simulated} = 130.235$. The deviation between these values was explained by measurement errors, parasitic resistances, and the limitations of the measuring instruments.

In the final part, the amplifier's bandwidth and frequency response were analyzed. The results showed that the circuit acted as a bandpass filter, where the gain decreased at both low and high frequencies. The measured cutoff frequencies were close to the simulated ones, with differences mainly caused by manual frequency adjustment on the oscilloscope, parasitic effects, and component tolerances.

Overall, the experiment provided a solid understanding of the BJT's working principles, including its structure, biasing, amplification, and frequency response. The results confirmed theoretical expectations and highlighted the impact of real-world factors on circuit performance.

5. References

- http://uwp-cu-lab.my-board.org/02.0.adveelab/02.1.signalsys/20240829-co-520b_manual.pdf
- Behzad, Razavi, 2nd edition, Fundamentals of Microelectronics

6. Appendix

Experiment 4 – Properties of the Differential Amplifier Introduction to Operational Amplifier

6.1 Prelab Operational Amplifier

6.1.1 Problem 1 – Simulate a Differential Amplifier

1) Perform a DC operation point analysis of the circuit:
Implemented circuit using LTSpice:

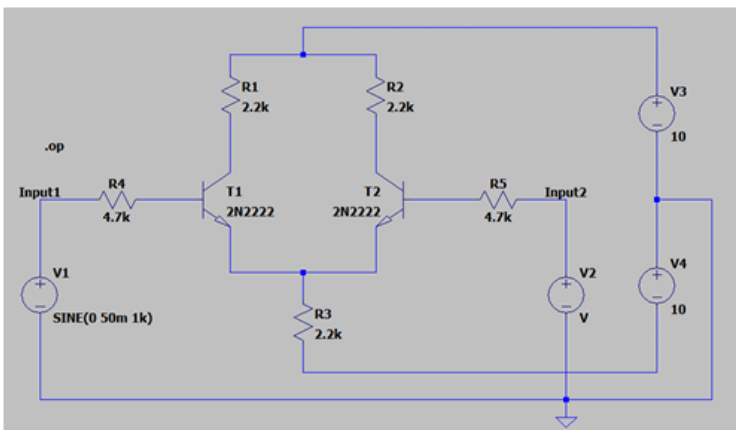


```
       --- Operating Point ---

V(input1):      0              voltage
V(b):           -0.0470949     voltage
V(c):           5.3824         voltage
V(e):           -0.720716      voltage
V(n001):        10             voltage
V(n002):        5.3824         voltage
V(n003):        -0.0470949     voltage
V(input2):      0              voltage
V(n004):        -10            voltage
Ic(T1):         0.00209891     device_current
Ib(T1):         1.00202e-05    device_current
Ie(T1):         -0.00210893    device_current
Ic(T2):         0.00209891     device_current
Ib(T2):         1.00202e-05    device_current
Ie(T2):         -0.00210893    device_current
I(R4):          -1.00202e-05   device_current
I(R1):          0.00209891     device_current
I(R2):          0.00209891     device_current
I(R5):          1.00202e-05    device_current
I(R3):          0.00421786     device_current
I(V1):          -1.00202e-05   device_current
I(V2):          -1.00202e-05   device_current
I(V3):          -0.00419782    device_current
I(V4):          -0.00421786    device_current
```

```
Semiconductor Device Operating Points:
                                --- Bipolar Transistors ---
Name:       qSt1        qSt2
Model:      2n2222      2n2222
Ib:         1.00e-05    1.00e-05
Ic:         2.10e-03    2.10e-03
Vbe:        6.74e-01    6.74e-01
Vbc:       -5.43e+00   -5.43e+00
Vce:        6.10e+00    6.10e+00
BetaDC:     2.09e+02    2.09e+02
Gm:         8.06e-02    8.06e-02
Rpi:        2.58e+03    2.58e+03
Rx:         1.00e+01    1.00e+01
Ro:         5.02e+04    5.02e+04
Cbe:        7.19e-11    7.19e-11
Cbc:        3.99e-12    3.99e-12
Cjs:        0.00e+00    0.00e+00
BetaAC:     2.08e+02    2.08e+02
Cbx:        0.00e+00    0.00e+00
Ft:         1.69e+08    1.69e+08
```

Figure 21: Operating Points Values Simulation

Quantity	Values From Simulation
V_BE(T1, T2), V	0.6736211
V_C(T1, T2), V	5.3824
I_C(T1, T2), A	0.00209891
I_E(T1, T2), A	-0.00210893
I_RE, A	0.00421786

Table 8: Simulation Values for different Quantities

Implemented circuit using LTSpice:

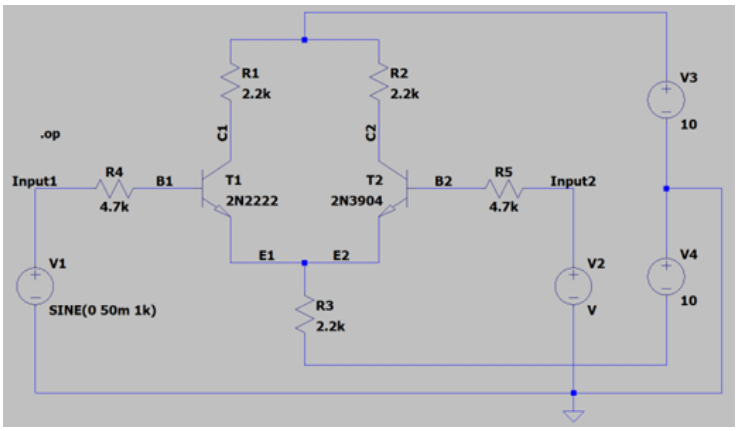


```
       --- Operating Point ---

V(input1):      0              voltage
V(b1):          -0.0414682     voltage
V(c1):          5.91072        voltage
V(e2):          -0.711738      voltage
V(n001):        10             voltage
V(c2):          4.83693        voltage
V(b2):          -0.0352553     voltage
V(input2):      0              voltage
V(n002):        -10            voltage
Ic(T1):         0.00185876     device_current
Ib(T1):         8.82303e-06    device_current
Ie(T1):         -0.00186758    device_current
Ic(T2):         0.00234685     device_current
Ib(T2):         7.50114e-06    device_current
Ie(T2):         -0.00235435    device_current
I(R4):          -8.82303e-06   device_current
I(R1):          0.00185876     device_current
I(R2):          0.00234685     device_current
I(R5):          7.50114e-06    device_current
I(R3):          0.00422194     device_current
I(V1):          -8.82303e-06   device_current
I(V2):          -7.50114e-06   device_current
I(V3):          -0.00420561    device_current
I(V4):          -0.00422194    device_current

Semiconductor Device Operating Points:
                                   --- Bipolar Transistors ---
Name:      q$t1        q$t2
Model:     2n2222      2n3904
Ib:        8.82e-06    7.50e-06
Ic:        1.86e-03    2.35e-03
Vbe:       6.70e-01    6.76e-01
Vbc:      -5.95e+00   -4.87e+00
Vce:       6.62e+00    5.55e+00
BetaDC:    2.11e+02    3.13e+02
Gm:        7.14e-02    9.02e-02
Rpi:       2.93e+03    3.45e+03
Rx:        1.00e+01    2.00e+01
Ro:        5.70e+04    4.47e+04
Cbe:       6.82e-11    4.43e-11
Cbc:       3.88e-12    2.06e-12
Cjs:       0.00e+00    0.00e+00
BetaAC:    2.09e+02    3.11e+02
Cbx:       0.00e+00    0.00e+00
Ft:        1.58e+08    3.10e+08
```

Figure 22: Operating Points Values Simulated

Quantity	Values From Simulation	
	2N2222	2N3904
V_BE, V	0.6702598	0.6764827
V_C, V	5.91072	4.83693
I_C, A	0.00185876	0.00234685
I_E, A	-0.00186758	-0.00235435
I_RE, A	0.00422194	0.00422194

Table 9: Simulation Values for different Quantities

2) Perform a transient analysis. Use single ended input mode.

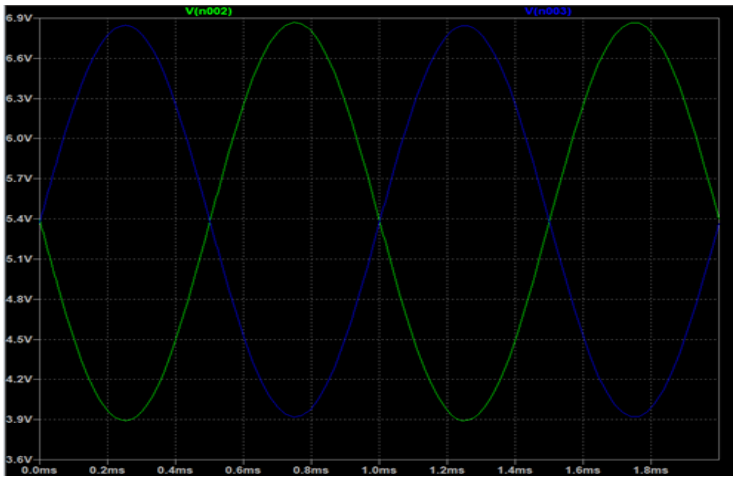

Figure 23: Collector Voltages, V_{T1} = 6.869236 V, V_{T2} = 6.846616 V

$$dBA_{vdiff} = 20log\left(\frac{V_{od-pp}}{V_{id-pp}}\right) = 20log\left(\frac{6.869236 - 3.89268}{2 \times 50 \times 10^{-3}}\right) = 29.474\ dB$$

3) Perform a simulation with common mode input

Implemented circuit using LTSpice:

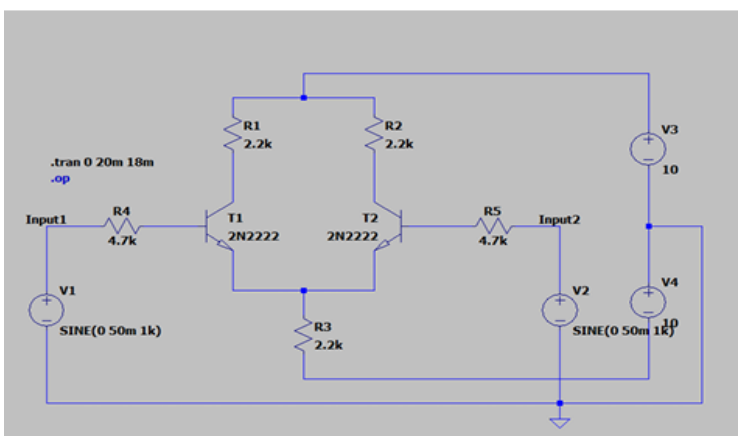

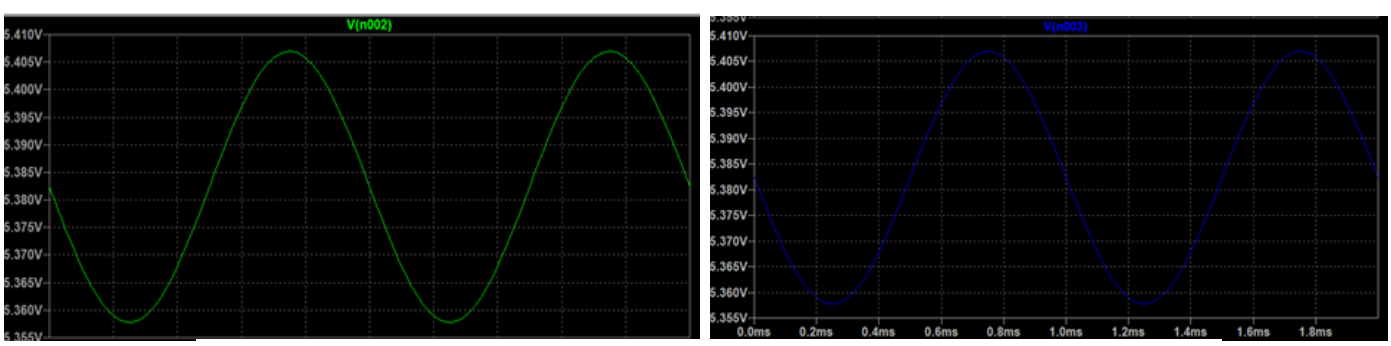

Figure 23: Collector Voltages, V_{T1} = 5.407 V, V_{T2} = 5.407 V

$$dBA_{vcm} = 20log\left(\frac{V_{oc-pp}}{V_{ic-pp}}\right) = 20log\left(\frac{5.4070284 - 5.357777}{2 \times 50 \times 10^{-3}}\right) = -6.15163\ dB$$

4) Calculate the common mode rejection ration in dB

$$CMRR = 20log\left(\frac{V_{vdiff}}{V_{vcm}}\right) = 20log(V_{vdiff}) - 20log(V_{vcm}) = 29.474 + 6.15163 = 35.62563\ dB$$

5) Replace the resistor R_3 by a current source.

a) Perform a DC operation point analysis of the circuit
Implemented circuit using LTSpice:

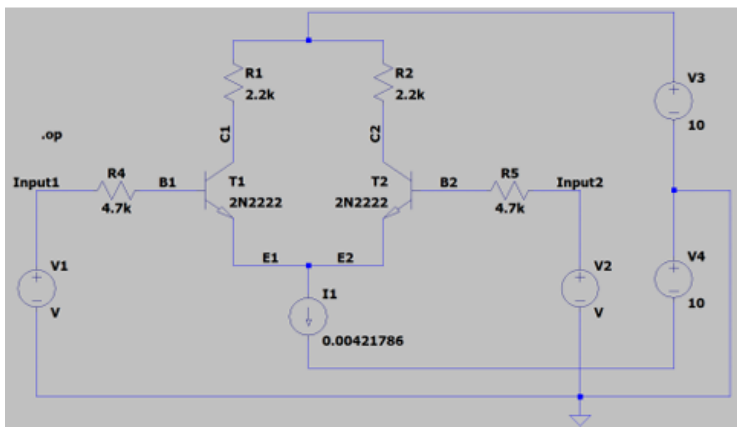


```
        --- Operating Point ---

V(input1):      0              voltage
V(b1):          -0.0470949     voltage
V(c1):          5.3824         voltage
V(e2):          -0.720717      voltage
V(n001):        10             voltage
V(c2):          5.3824         voltage
V(b2):          -0.0470949     voltage
V(input2):      0              voltage
V(n002):        -10            voltage
Ic(T1):         0.00209891     device_current
Ib(T1):         1.00202e-05    device_current
Ie(T1):         -0.00210893    device_current
Ic(T2):         0.00209891     device_current
Ib(T2):         1.00202e-05    device_current
Ie(T2):         -0.00210893    device_current
I(I1):          0.00421786     device_current
I(R4):          -1.00202e-05   device_current
I(R1):          0.00209891     device_current
I(R2):          0.00209891     device_current
I(R5):          1.00202e-05    device_current
I(V1):          -1.00202e-05   device_current
I(V2):          -1.00202e-05   device_current
I(V3):          -0.00419782    device_current
I(V4):          -0.00421786    device_current

Semiconductor Device Operating Points:
                          --- Bipolar Transistors ---
Name:       q$t1        q$t2
Model:      2n2222      2n2222
Ib:         1.00e-05    1.00e-05
Ic:         2.10e-03    2.10e-03
Vbe:        6.74e-01    6.74e-01
Vbc:       -5.43e+00   -5.43e+00
Vce:        6.10e+00    6.10e+00
BetaDC:     2.09e+02    2.09e+02
Gm:         8.06e-02    8.06e-02
Rpi:        2.58e+03    2.58e+03
Rx:         1.00e+01    1.00e+01
Ro:         5.02e+04    5.02e+04
Cbe:        7.19e-11    7.19e-11
Cbc:        3.99e-12    3.99e-12
Cjs:        0.00e+00    0.00e+00
BetaAC:     2.08e+02    2.08e+02
Cbx:        0.00e+00    0.00e+00
Ft:         1.69e+08    1.69e+08
```

Figure 24: Operating Points Values Simulated

Quantity	Values From Simulation
V_BE(T1, T2), V	0.6736211
V_C(T1, T2), V	5.3824
I_C(T1, T2), A	0.00209891
I_E(T1, T2), A	-0.00210893
I_RE, A	0.00421786

Table 10: Simulation Values for different Quantities

b) Perform a transient analysis. Use single ended input mode.
Implemented circuit using LTSpice:

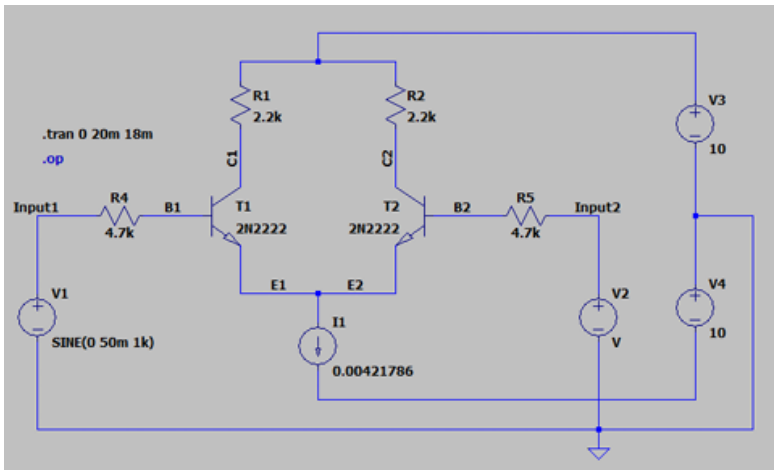

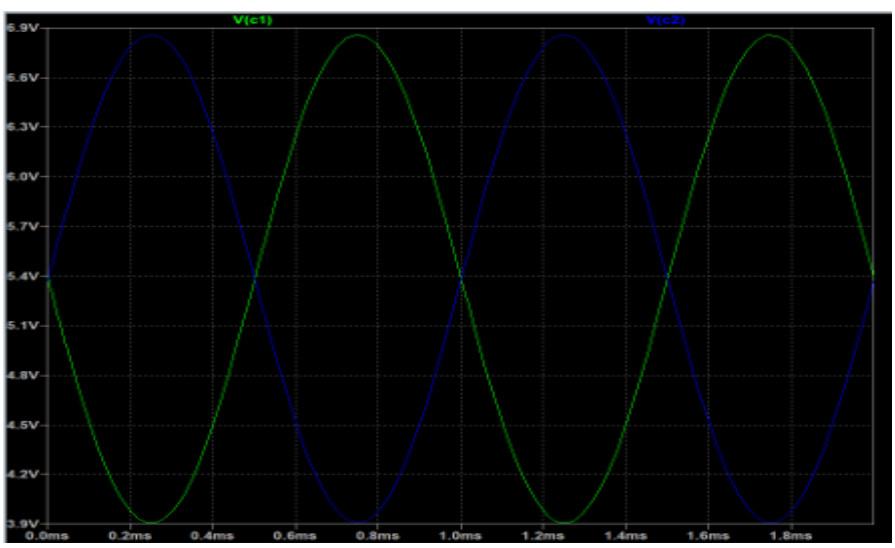

Figure 25: Collector Voltages, V_{T1} = 6.858594 V, V_{T2} = 6.857091 V

$$dBA_{vdiff} = 20log\left(\frac{V_{od-pp}}{V_{id-pp}}\right) = 20log\left(\frac{6.858594 - 3.907957}{2 \times 50 \times 10^{-3}}\right) = 29.398\ dB$$

c) Perform a transient analysis. Use single ended input mode.
Implemented circuit using LTSpice:

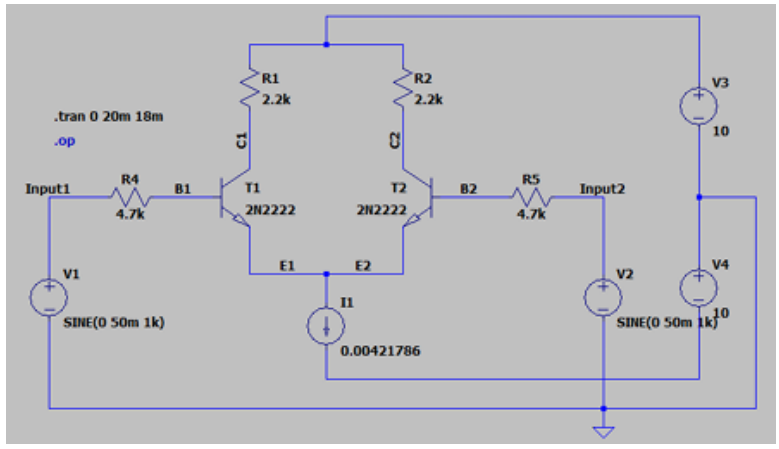

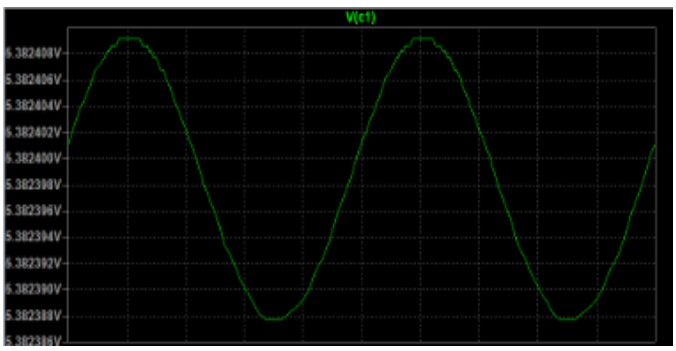

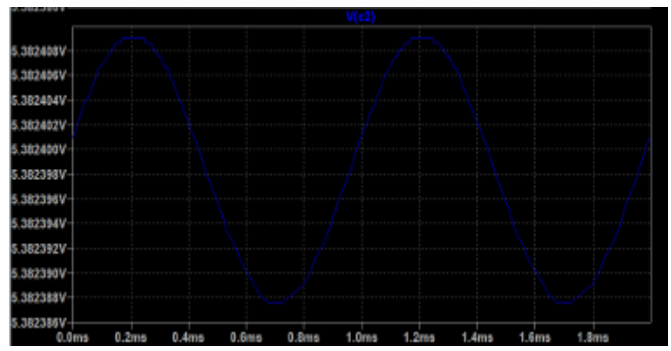

Figure 26: Collector Voltages, V_{T1} = 5.3824 V, V_{T2} = 5.3824 V

$$dBA_{vcm} = 20log\left(\frac{V_{oc-pp}}{V_{ic-pp}}\right) = 20log\left(\frac{5.382409097 - 5.3823876}{2 \times 50 \times 10^{-3}}\right) = -73.35244\ dB$$

d) Calculate the common mode rejection ratio in dB

$$CMRR = 20log\left(\frac{V_{vdiff}}{V_{vcm}}\right) = 20log(V_{vdiff}) - 20log(V_{vcm}) = 29.398 + 73.35244 = 102.75044\ dB$$

6.2 Data Collected from the Experiments

6.2.1 Problem 1 – Differential amplifier using a fixed emitter resistor

Quantity	T_1	T_2
V_C, V	5.842	4.867
V_B, V	0.0628	0.0677
V_BE, V	0.6364	0.6313
I_C, A	0.002655	0.002212
I_RE, A	0.004247	0.004247

Table 11: Values Measured during the experiment

Function Generator Settings:

Wave – sine.
Frequency – 1 kHz.
Amplitude – 50 mVpp.

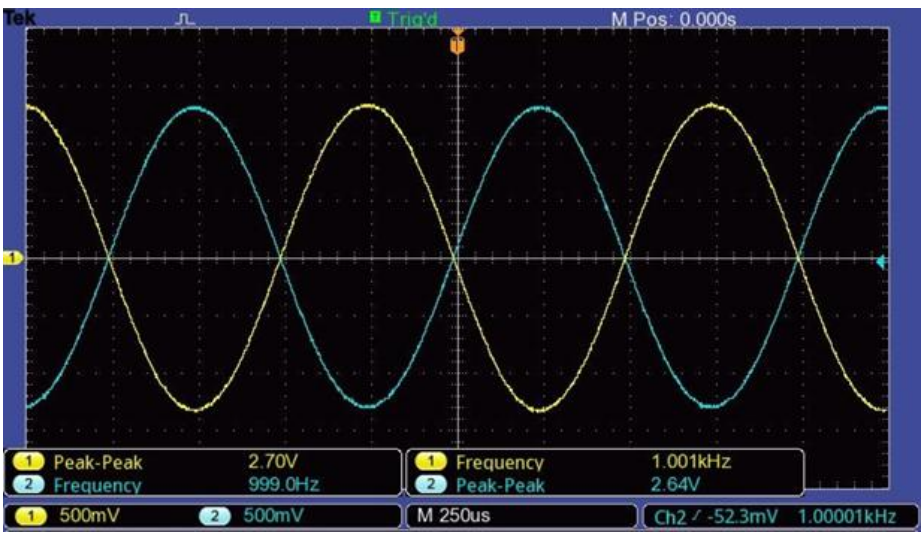

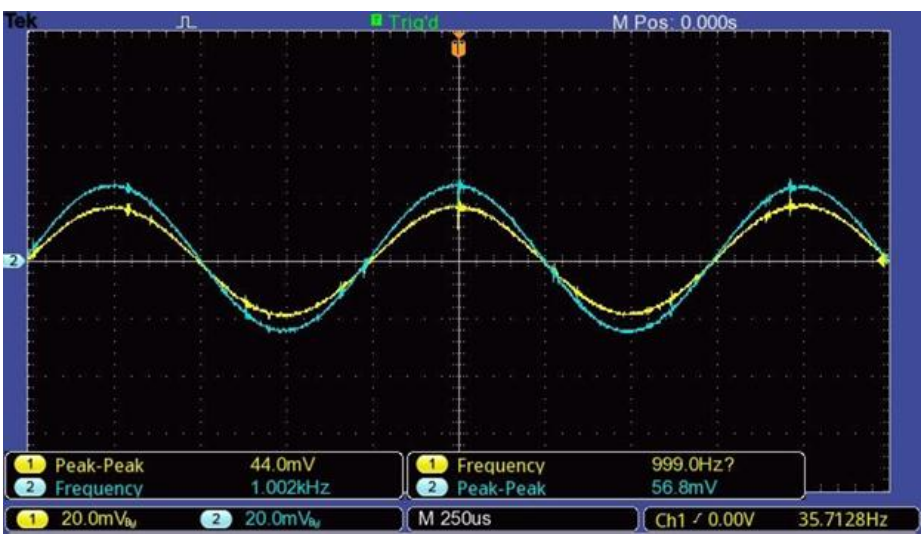

$$dBA_{vdiff} = 20log\left(\frac{2.7}{106 \times 10^{-3}}\right) = 28.121\ dB$$

$$dBA_{vcm} = 20log\left(\frac{44 \times 10^{-3}}{103.5 \times 10^{-3}}\right) = -7.43\ dB$$

$$CMRR = 20log\left(\frac{V_{vdiff}}{V_{vcm}}\right) = 20log(V_{vdiff}) - 20log(V_{vcm}) = 28.121 + 7.42975 = 35.551\ dB$$

6.2.2 Problem 2 – Implement a Current Source

The calculated values of resistors:

$$R_1 = \frac{10 - 4.7}{10 \times 10^{-3}} = 530\ \Omega$$

$$R_2 = \frac{4.7 - 0.7}{4 \times 10^{-3}} = 1000\ \Omega$$

6.2.3 Problem 3 – Differential Amplifier using a Current Source

Quantity	T_1	T_2
V_C, V	6.836	4.659
V_B, V	0.0493	0.0451
V_BE, V	0.6309	0.6349
I_C, A	0.001441	0.002434
I_RE, A	0.003914	0.003914

Table 12: Values Measured during the experiment

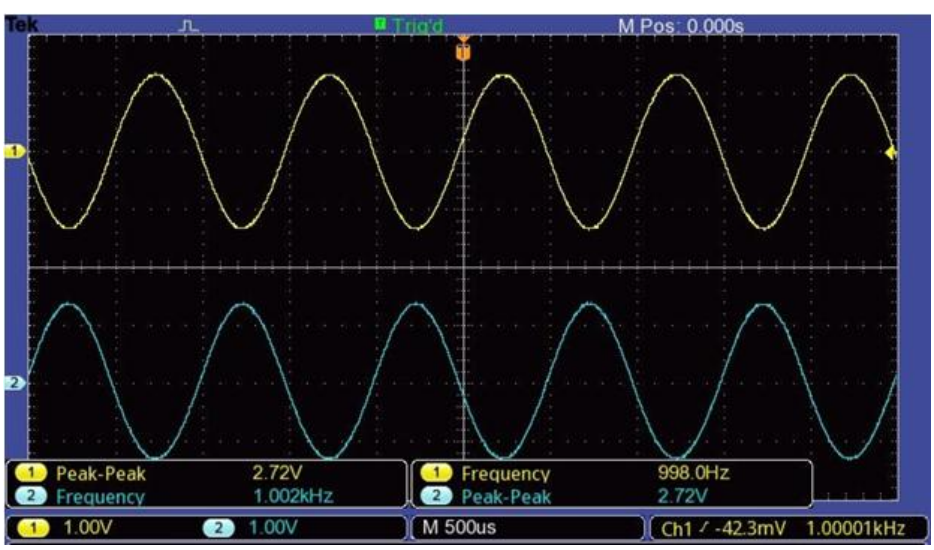

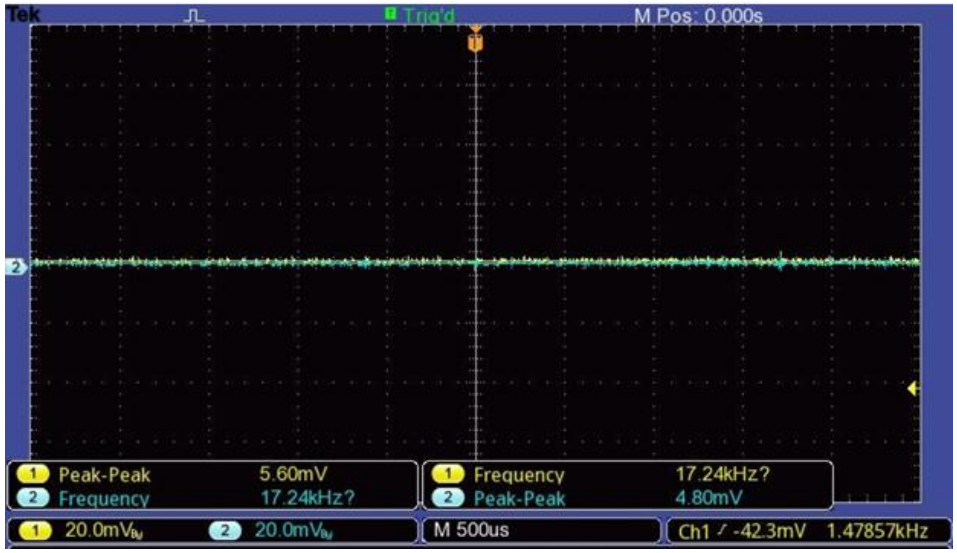

$$dBA_{vdiff} = 20log\left(\frac{2.7}{108 \times 10^{-3}}\right) = 28.023\ dB$$

$$dBA_{vcm} = 20log\left(\frac{5.6 \times 10^{-3}}{103.5 \times 10^{-3}}\right) = -25.335\ dB$$

$$CMRR = 20log\left(\frac{V_{vdiff}}{V_{vcm}}\right) = 20log(V_{vdiff}) - 20log(V_{vcm}) = 28.023 + 25.335 = 53.358\ dB$$