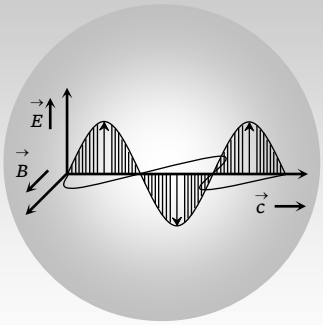


# Electromagnetic Waves

## Maxwell's Contribution

(1) **Ampere's Circuital law**

According to this law the line integral of magnetic field along any closed path or circuit is $\mu_0$ times the total current threading the closed circuit *i.e.*, $\oint \vec{B}.\vec{dl} = \mu_0 i$

(2) **Inconsistency of Ampere's law**

Maxwell explained that Ampere's law is valid only for steady current or when the electric field does not change with time. To see this inconsistency consider a parallel plate capacitor being charged by a battery. During the charging time varying current flows through connecting wires.

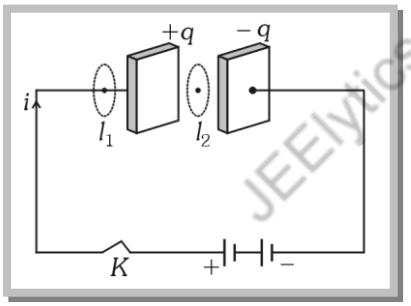


Applying Ampere's law for loop $l_1$ and $l_2$ $\oint_{l_1} \vec{B}.\vec{dl} = \mu_0 i$

But $\oint_{l_2} \vec{B}.\vec{dl} = 0$ (Since no current flows through the region between the plates). But practically it is observed that there is a magnetic field between the plates. Hence Ampere's law fails

*i.e.* $\oint_{l_1} \vec{B}.\vec{dl} \neq \mu_0 i$.

(3) **Modified Ampere's Circuital law or Ampere- Maxwell's Circuital law**

Maxwell assumed that some sort of current must be flowing between the capacitor plates during charging process. He named it displacement current. Hence modified law is as follows

$$\oint \vec{B}.\vec{dl} = \mu_0(i_c + i_d) \quad \text{or} \quad \oint \vec{B}.\vec{dl} = \mu_0(i_c + \varepsilon_0 \frac{d\phi_E}{dt})$$

where $i_c$ = conduction current = current due to flow of charges in a conductor and

$i_d$ = Displacement current = $\varepsilon_0 \frac{d\phi_E}{dt}$ = current due to the changing electric field between the plates of the capacitor

**Note :** ❑ Displacement current ($i_d$) = conduction current ($i_c$).

❑ $i_c$ and $i_d$ in a circuit, may not be continuous but their sum is always continuous.

(4) **Maxwell's equations**

(i) $\oint_s \vec{E}.\vec{ds} = \frac{q}{\varepsilon_0}$ (Gauss's law in electrostatics) (ii) $\oint_s \vec{B}.\vec{ds} = 0$ (Gauss's law in magnetism)

(iii) $\oint \vec{B}.\vec{dl} = -\frac{d\phi_B}{dt}$ (Faraday's law of EMI) (iv) $\oint \vec{B}\,\vec{dl} = \mu_o(i_c + \varepsilon_o \frac{d\phi_E}{dt}$ (Maxwell- Ampere's Circuital law)

## EM Waves

(1) **Definition**

A changing electric field produces a changing magnetic field and vice versa which gives rise to a transverse wave known as electromagnetic wave. The time varying electric and magnetic field are mutually perpendicular to each other and also perpendicular to the direction of propagation of this wave.

The electric vector is responsible for the optical effects of an EM wave and is called

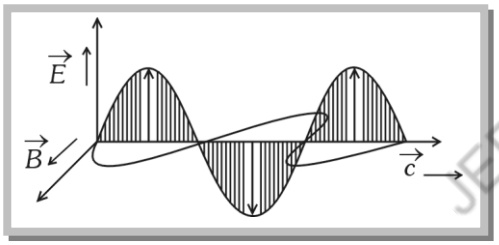


(2) **History of EM waves :**

(i) **Maxwell :** Was the first to predict the EM wave.

(ii) **Hertz :** Produced and detected electromagnetic waves experimentally at wavelengths of 6 $m$.

***Experimental setup***

Hertz experiment based on the fact that a oscillating charge is accelerating continuously, it will radiate electromagnetic waves continuously. In the following figure

- The metallic plates ($P_1$ and $P_2$) acts as a capacitor.
- The wires connecting spheres $S_1$ and $S_2$ to the plates provide a low inductance.

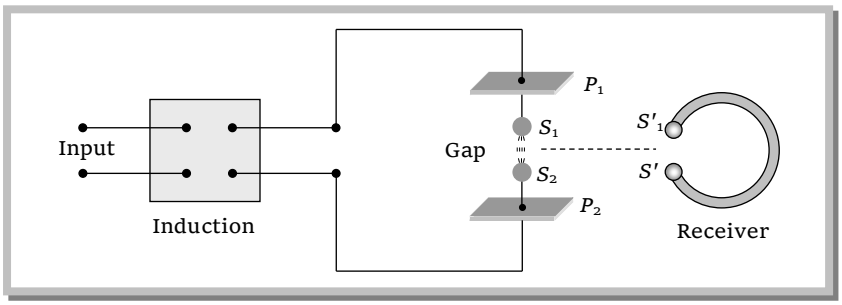

When a high voltage is applied across metallic plates these plates get discharged by sparking across the narrow gap. The spark will give rise to oscillations which in turn send out electromagnetic waves. Frequency of these wave is given by $\nu = \frac{1}{2\pi\sqrt{LC}}$

The succession of sparks send out a train of such waves which are received by the receiver.

(iii) **J.C. Bose :** Produced EM waves of wavelength ranging from 5*mm* to 25 *mm*.

(iv) **Marconi :** Successfully transmitted the EM waves up to a few *kilometer*. Marconi discovered that if one of the spark gap terminals is connected to an antenna and the other terminal is Earthed, the electromagnetic waves radiated could go upto several kilometers.

(3) **Source of EM waves**

A charge oscillating harmonically is a source of EM waves of same frequency.

(4) **Production of EM waves**

A simple *LC* oscillator and energy source can produce waves of desired frequency.

Frequency of oscillating discharge in *LC* circuit = Frequency of EM waves $= \frac{1}{2\pi\sqrt{LC}}$

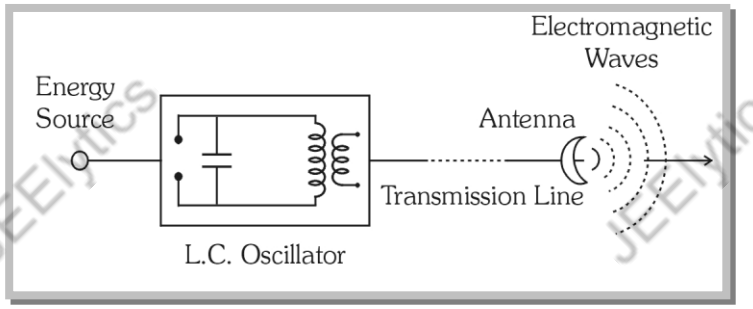


***Note :***
- In an atom an electron circulating around the nucleus in a stable orbit, although accelerating does not emit electromagnetic waves; it does so only when it jumps from a higher energy orbit to a lower energy orbit.
- Electromagnetic waves (*X*-rays) are also produced when fast moving electrons are suddenly stopped by a metal target of high atomic number.
- Most efficient antennas are those which have a size comparable to the wavelength of the of electromagnetic wave they emit or receive.

(5) **Nature of EM waves**

The EM Waves are transverse in nature. They do not require any material medium for their propagation.

(6) **Properties of EM waves**

(i) Speed : In free space it's speed $c = \frac{1}{\sqrt{\mu_0 \varepsilon_0}} = \frac{E_0}{B_0} = 3 \times 10^8 \, m/s.$

In medium $v = \frac{1}{\sqrt{\mu\varepsilon}}$; where $\mu_0$ = Absolute permeability, $\varepsilon_0$ = Absolute permittivity

$E_0$ and $B_0$ = Amplitudes of electric field and magnetic field vectors.

(ii) Energy : The energy in an EM waves is divided equally between the electric and magnetic fields.

Energy density of electric field $u_e = \frac{1}{2}\varepsilon_0 E^2$, Energy density of magnetic field $u_B = \frac{1}{2}\frac{B^2}{\mu_0}$

It is found that $u_e = u_B$. Also $u_{av} = u_e + u_B = 2u_e = 2u_B = \varepsilon_0 E^2 = \frac{B^2}{\mu_0}$

(iii) Intensity ($I$) : The energy crossing per unit area per unit time, perpendicular to the direction of propagation of EM wave is called intensity. $I = u_{av} \times c = \frac{1}{2}\varepsilon_0 E^2 c = \frac{1}{2}\frac{B^2}{\mu_0}.c$

(iv) Momentum : EM waves also carries momentum, if a portion of EM wave of energy $u$ propagating with speed $c$, then linear momentum $= \frac{\text{Energy } (u)}{\text{Speed } (c)}$

**Note :** ❑ When the incident EM wave is completely absorbed by a surface, it delivers energy $u$ and momentum $u$ / c to the surface.

❑ When a wave of energy $u$ is totally reflected from the surface, the momentum delivered to surface is $2u/c$.

(v) Poynting vector $(\vec{S})$. : In EM waves, the rate of flow of energy crossing a unit area is described by the poynting vector. It's unit is $watt/m^2$ and $\vec{S} = \frac{1}{\mu_o}(\vec{E} \times \vec{B}) = c^2\varepsilon_0(\vec{E} \times \vec{B})$. Because in EM waves $\vec{E}$ and $\vec{B}$ are perpendicular to each other, the magnitude of $\vec{S}$ is $|\vec{S}| = \frac{1}{\mu_0} E\,B \sin 90^o = \frac{EB}{\mu_0} = \frac{E^2}{\mu C}$.

**Note :** ❑ The direction of the poynting vector $\vec{S}$ at any point gives the wave's direction of travel and direction of energy transport the point.

(vi) Radiation pressure : Is the momentum imparted per second pre unit area. On which the light falls.

For a perfectly reflecting surface $P_r = \frac{2S}{c}$ ; $S$ = Poynting vector; $c$ = Speed of light

For a perfectly absorbing surface $P_a = \frac{S}{c}$.

**Note :** ❑ The radiation pressure is real that's why tails of comet point away from the sun.

## EM Spectrum

The whole orderly range of frequencies/wavelengths of the EM waves is known as the EM spectrum.

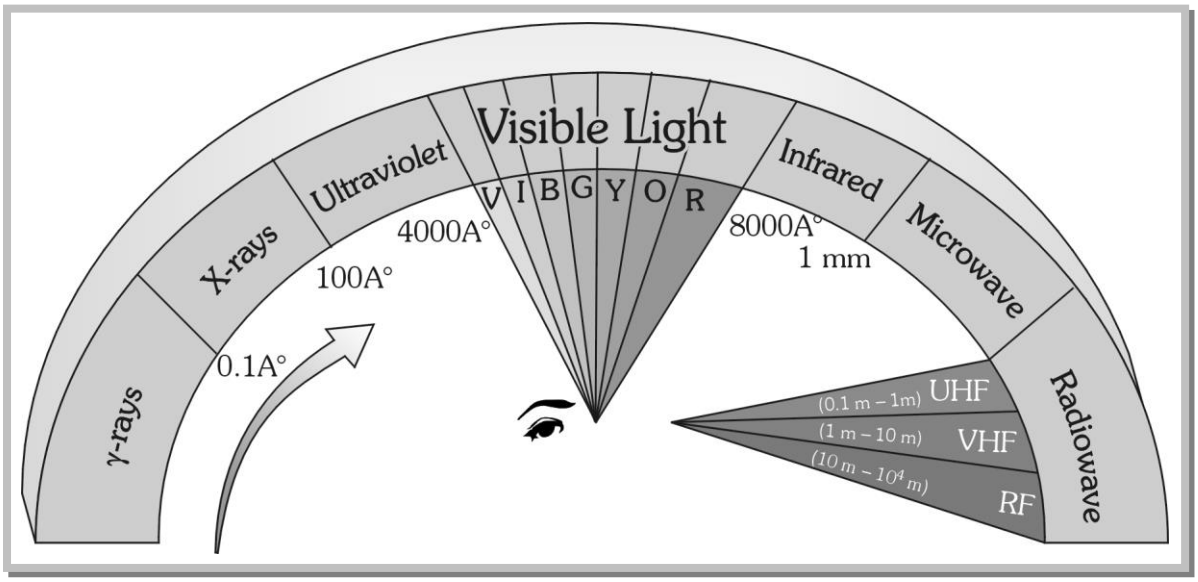


### *Uses of EM spectrum*

| Radiation | Uses |
|---|---|
| $\gamma$-rays | Gives informations on nuclear structure, medical treatment *etc.* |
| *X*-rays | Medical diagnosis and treatment study of crystal structure, industrial radiograph. |
| *UV*- rays | Preserve food, sterilizing the surgical instruments, detecting the invisible writings, finger prints etc. |
| Visible light | To see objects |
| Infrared rays | To treat, muscular strain for taking photography during the fog, haze etc. |
| Micro wave and radio wave | In radar and telecommunication. |

## Earth's Atmosphere

The gaseous envelope surrounding the earth is called it's atmosphere. The atmosphere contains 78% $N_2$, 21% $O_2$, and traces of other gases (like helium, krypton, $CO_2$ etc.)

(1) **Division of earth's atmosphere**

Earth atmosphere has been divided into regions as shown.

(i) *Troposphere* : In this region, the temperature decreases with height from 290 *K* to 220 *K*.

(ii) *Stratosphere* : The temperature of stratosphere varies from 220 *K* to 200 *K*.

(iii) *Mesosphere* : In this region, the temperature falls to 180 *K*.

(iv) *Ionosphere* : Ionosphere is partly composed of charged particles, ions and electrons, while the rest of the atmosphere contains neutral molecules.

(v) Ozone layer absorbs most of the ultraviolet rays emitted by the sun.

(vi) Kennelly heaviside layer lies at about 110*km* from the earth's surface. In this layer concentration of electron is very high.

(vii) The ionosphere plays a vital role in the radio communication.

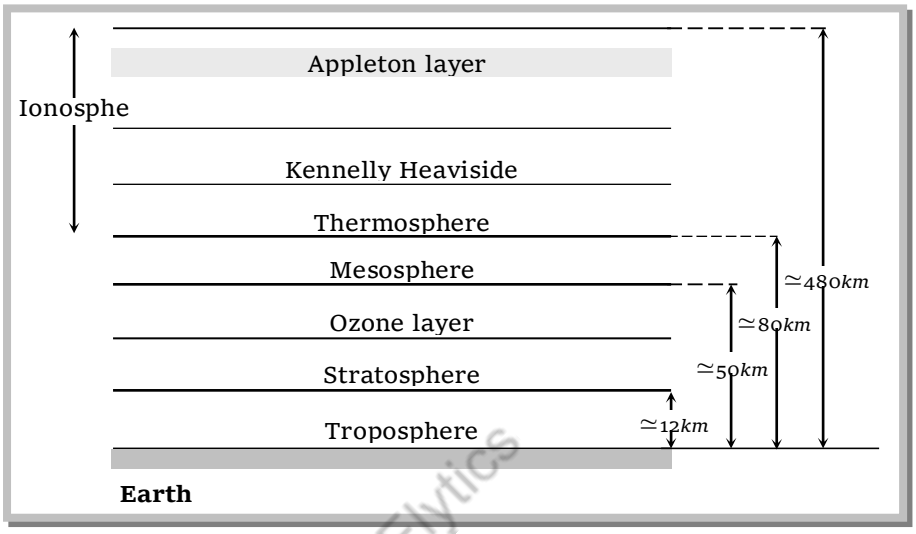


(2) **Green house effect**

The warming of earth's atmosphere due to the infrared radiations reflected by low lying clouds and carbon dioxide in the atmosphere of earth is called green house effect.

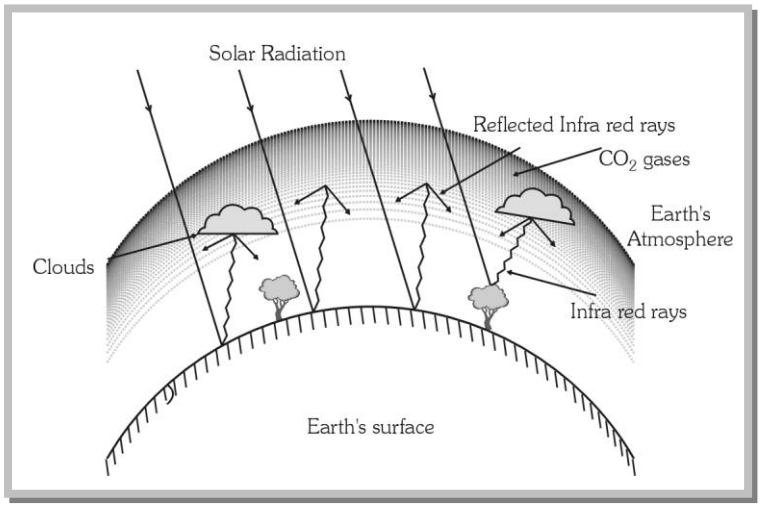


(3) **Modulation and demodulation**

The audio waves can be heard only over short distances. To overcomes this difficulty, an audio wave (low frequency) to be transmitted is superimposed on the carrier wave (high frequency). This process of superimposing is called modulation.

The process of separating the audio frequency wave from the carrier wave is called demodulation.

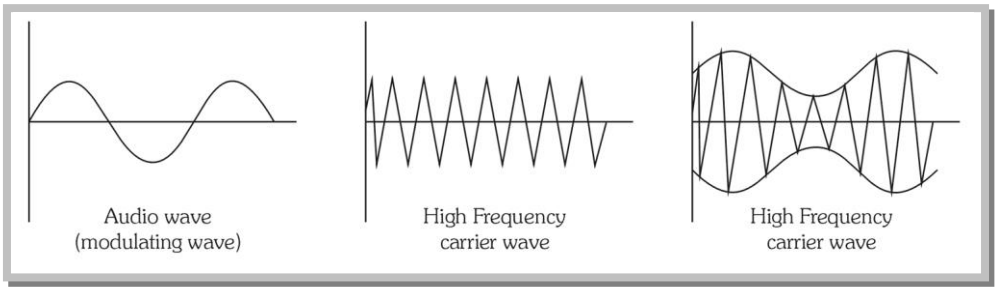


Amplitude modulation (Amplitude of carrier wave modifies in accordance with the amplitude of modulating wave)

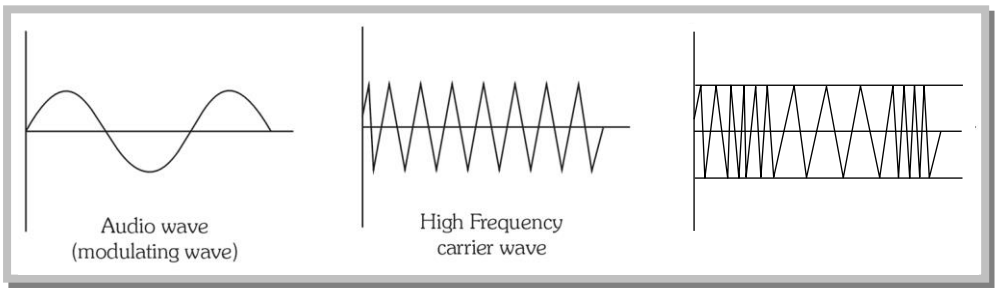


Frequency modulation (frequency of carrier wave changes in accordance with the amplitude of modulating wave)

(4) **Role of earth's atmosphere in propagation of radio waves**

(i) **Radio waves classification :**

(a) Very low frequency (VLF) $\rightarrow$ 10 *KHz* to 30 *KHz*

(b) Low frequency (LF) $\rightarrow$ 30 *KHz* to 300 *KHz*

(c) Medium frequency (MF) or medium wave (MW) $\rightarrow$ 300 *KHz* to 3000 *KHz*

(d) High frequency (HF) or short wave (SW) $\rightarrow$ 3 *MHz* to 30 *MHz*

(e) Very high frequency (VHF) $\rightarrow$ 30 *MHz* to 300 *MHz*

(f) Ultra high frequency (UHF) $\rightarrow$ 300 *MHz* to 3000 *MHz*

(g) Super high frequency or micro waves $\rightarrow$ 3000 *MHz* to 300, 000 *MHz*

(ii) **Amplitude modulated transmission :** Radio waves having frequency less than or equal to 30 MHz form an amplitude modulation band (or AM band). The signals can be transmitted from one place to another place on earth's surface in two ways

(a) Ground wave propagation : The radio waves following the surface of the earth are called ground waves.

(b) Sky wave propagation : The amplitude modulated radio waves which are reflected back by the ionosphere are called sky waves.

(iii) **Frequency modulated (FM) transmission :** Radio waves having frequencies between 80 MHz and 200 MHz form a frequency modulated bond. T.V. signals are normally frequency modulated.

**Note :** ❑ Ionosphere cannot reflect back the waves of frequencies greater than 40 *MHz* as these waves easily penetrate through the ionosphere.

(5) **T.V. Signals :**

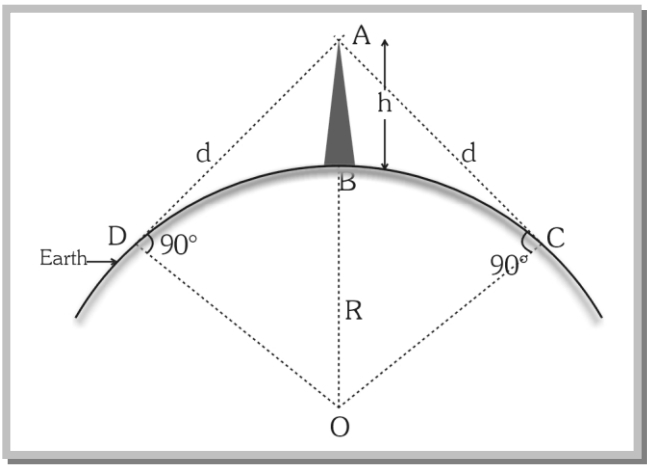


(i) T.V. signals are normally frequency modulated. So T.V. signals can be transmitted by using tall antennas.

(ii) Distance covered by the T.V. signals $d = \sqrt{2hR}$

($h$ = Height of the antenna, $R$ = Radius of earth)

(iii) Area covered $A = \pi d^2 = 2\pi hR$

(iv) Population covered = area × population density.

## Example

**Example: 1** A flash light is covered with a filter that transmits red light. The electric field of the emerging beam is represented by a sinusoidal plane wave $E_x = 36\sin(1.20\times10^7 z - 3.6\times10^{15} t)\, V/m$. The average intensity of the beam will be

(a) $0.86\ W/m^2$ (b) $1.72\ W/m^2$ (c) $3.44\ W/m^2$ (d) $6.88\ W/m^2$

*Solution* : (b) $I_{av} = \frac{c\varepsilon_0 E_0^2}{2} = \frac{3\times10^8 \times 8.85\times10^{-15}\times36^2}{2} = 1.72\ W/m^2$

**Example: 2** What should be the height of transmitting antenna if the T.V. telecast is to cover a radius of 128 *Km*

(a) 1560 *m* (b) 1280 *m* (c) 1050 *m* (d) 79 *m*

*Solution* : (b) Height of transmitting antenna $h = \frac{d^2}{2\,\mathrm{Re}} = \frac{(128\times10^3)^2}{2\times6.4\times10^6} = 1280\ m$

**Example: 3** A T.V. tower has a height of 100 *m*. How much population is covered by T.V. broadcast, if the average population density around the tower is $1000\ /Km^2$

(a) $39.5\times10^5$ (b) $19.5\times10^6$ (c) $29.5\times10^7$ (d) $9\times10^4$

*Solution* : (a) Radius of the area covered by T.V. telecast $d = \sqrt{2hR_e}$

Total population covered $= \pi d^2 \times$ population density $= 2\pi hR_e \times$ Population density

$$= 2\times3.14\times100\times6.4\times10^6\times\frac{1000}{10^6} = 39.503\times10^5$$

**Example: 4** An electromagnetic radiation has an energy 14.4 *KeV*. To which region of electromagnetic spectrum does it belong

(a) Infra red region (b) Visible region (c) $X$-rays region (d) $\gamma$ -ray region

*Solution* : (c) $\lambda = \frac{hc}{E} = \frac{6.6 \times 10^{-34} \times 3 \times 10^{8}}{14.4 \times 10^{3} \times 1.6 \times 10^{-19}} = 0.8 \times 10^{-10} m = 0.8 \mathring{A}$. This wavelength belongs to $X$-ray region.

***Example*: 5** A point source of electromagnetic radiation has an average power output of 800$W$. The maximum value of electric field at a distance 3.5 $m$ form the source will be

(a) 56.7 $V/m$ (b) 62.6 $V/m$ (c) 39.3 $V/m$ (d) 47.5 $V/m$

*Solution* : (b) Intensity of electromagnetic wave given is by $I = \frac{P_{av}}{4\pi r^2} = \frac{E_m^2}{2\mu_0 c}$

$$E_m = \sqrt{\frac{\mu_0 c P_{av}}{2\pi r^2}} = \sqrt{\frac{(4\pi \times 10^{-7}) \times (3 \times 10^{8}) \times 800}{2\pi \times 3.5^2}} = 62.6 \ V/m$$

***Example*: 6** In the above problem, the maximum value of magnetic field will be

(a) $2.09 \times 10^{-5} T$ (b) $2.09 \times 10^{-6} T$ (c) $2.09 \times 10^{-7} T$ (d) $2.09 \times 10^{-8} T$

*Solution* : (c) The maximum value of magnetic field is given by $B_m = \frac{E_m}{c} = \frac{62.6}{3 \times 10^{8}} = 2.09 \times 10^{-7} T$

***Example*: 7** A plane electromagnetic wave of wave intensity $6 W/m^2$ strikes a small mirror area $40 cm^2$, held perpendicular to the approaching wave. The momentum transferred by the wave to the mirror each second will be

(a) $6.4 \times 10^{-7} kg-m/s^2$ (b) $4.8 \times 10^{-8} kg-m/s^2$ (c) $3.2 \times 10^{-9} kg-m/s^2$ (d) $1.6 \times 10^{-10} kg-m/s^2$

*Solution* : (d) In one second $p = \frac{2U}{c} = \frac{2S_{av}A}{c} = \frac{2 \times 6 \times 40 \times 10^{-4}}{3 \times 10^{8}} = 1.6 \times 10^{-10} kg-m/s^2$

***Example*: 8** The charge on a parallel plate capacitor is varying as $q = q_0 \sin 2\pi nt$. The plates are very large and close together. Neglecting the edge effects, the displacement current through the capacitor is

(a) $\frac{q}{\varepsilon_0 A}$ (b) $\frac{q_0}{\varepsilon_0} \sin 2\pi nt$ (c) $2\pi n q_0 \cos 2\pi nt$ (d) $\frac{2\pi n q_0}{\varepsilon_0} \cos 2\pi nt$

*Solution* : (c) $I_D = \frac{dq}{dt} = \frac{d}{dt} q_0 \sin 2\pi nt = 2\pi n q_0 \cos 2\pi nt$

***Example*: 9** The value of magnetic field between plates of capacitor, at distance of 1$m$ from centre where electric field varies by $10^{10} V/m/s$ will be

(a) $5.56 T$ (b) $5.56 \mu T$ (c) $5.56 mT$ (d) $5.56 nT$

*Solution* : (d) $B = \frac{\mu_0 \varepsilon_0 r}{2} \frac{dE}{dt} = \frac{1}{2 \times 9 \times 10^{16}} \times 10^{10} = 5.56 \times 10^{-8} T$ $\left( \because e = \frac{1}{\sqrt{\mu_0 \varepsilon_0}} \right)$