Leveraging Rationality Labels for Explainable Claim Check-Worthiness

Megha Sundriyal, Md Shad Akhtar, and Tanmoy Chakraborty, *Senior Member, IEEE*

***Abstract*—Determining the check-worthiness of claims is an integral process in fact-checking. Despite ongoing advancements in claim check-worthiness detection, there remains a notable gap of transparency in elucidating why a claim is deemed check-worthy. Addressing this gap, we introduce an explainable approach to claim check-worthiness by incorporating "*rationality labels*." Closely mirroring the complex decision-making process of human cognition, these labels evaluate claims on multiple aspects, including factual verifiability, societal impact, and the likelihood of causing public unrest. Unlike existing systems that provide simplistic binary judgments on check-worthiness, our framework, `CheckMate`, delves into the nuanced human-like reasoning behind the assessment of claim check-worthiness for fact-checking. We also introduce `CheckIt`, the first claim check-worthiness dataset of 5920 tweets with rationality labels. This multidimensional approach offers a significant advancement over traditional binary evaluation systems. We compare our proposed approach with several baseline systems and comprehensively analyze the results, including quantitative and qualitative comparisons. Our data and code can be found here.**

***Impact Statement*—In today's vast social media world, fact-checking struggles to keep up with the sheer volume of social media information. As a solution, check-worthiness identification systems have been implemented. However, a significant shortcoming of these existing systems is the absence of transparency and explainability. This deficiency necessitates fact-checkers to spend more time comprehending the reasoning behind each assessment. To address this, we present a robust AI framework that emulates human-like decision-making to identify what's worth fact-checking. We consider factors like factual verifiability, the potential impact on society, the likelihood of causing public unrest, and so on. This will enhance transparency and explainability, enabling fact-checkers to choose what to fact-check wisely. It will ultimately strengthen the integrity and effectiveness of the fact-checking process in the digital age.**

***Index Terms*—Check-worthiness, claims, misinformation, online social media.**

Received 12 September 2024; revised 2 December 2024 and 2 February 2025; accepted 11 May 2025. Date of publication 26 May 2025; date of current version 31 December 2025. This article was recommended for publication by Associate Editor Alexandros Iosifidis upon evaluation of the reviewers' comments. *(Corresponding author: Megha Sundriyal.)*

Megha Sundriyal and Md Shad Akhtar are with the IIIT-Delhi, Delhi 110020, India (e-mail: meghas@iiitd.ac.in).

Tanmoy Chakraborty is with the IIT-Delhi, Delhi 110016, India.

This article has supplementary downloadable material available at https://doi.org/10.1109/TAI.2025.3571707, provided by the authors.

Digital Object Identifier 10.1109/TAI.2025.3571707

I. Introduction

THE rapid evolution of online social media, driven by human communication needs and technological advancements, has transformed it from a mere leisure activity into a thriving business sector. The freedom of speech and expression provided by these platforms has resulted in a tremendous increase in social media users. However, this unrestricted freedom comes at a high cost of factuality and accountability, allowing the dissemination of misinformation to pose a profound threat to public discourse, democratic processes, and societal cohesion. False claims might emanate accidentally, but in most cases, they are actively spread by those who seek to benefit from them. One such instance is the $45th$ Presidential election in the United States. The entire world witnessed the developing influence of fake news and false claims. It was reported that about 25% of Americans visited a fake news website, possibly impacting the election's outcome [1]. Another prominent example is the global COVID-19 pandemic. When the entire world experienced a lockdown, the virtual world drew closer, turning social media into the primary channel for information consumption and distribution. At roughly the same time, massive social media posts containing unsubstantiated false information about the pandemic started to appear, often leading to potentially fatal cures. Such claims had an unprecedented impact, resulting in monetary damage and the loss of priceless human lives. A study revealed that at least 800 individuals died worldwide in the first quarter of 2020 due to misinformation about COVID-19 [2].

In response to such events, various initiatives have been taken for fact-checking [3], [4], [5], [6]. Unfortunately, the daily publication of millions of blog articles and social media posts makes manual as well as automated fact-checking nearly absurd, necessitating a more refined strategic approach to first pinpoint the most heinous claims. For example, consider a post that reads "*Alcohol cures all kinds of illness, including coronavirus*." can lead to massive resharing and consequential unrest. On the other hand, a claim stating, "*I like eating oranges, it contains Vitamin-C*." is not a check-worthy claim. In such cases, automated filtration of crucial claims for immediate fact-checking could be of utmost importance. Hence, a crucial element within a fact-checking pipeline, including claim detection and claim verification, is the system that detects claims worthy of fact-checking, which aids in prioritizing claims for verification [7].

2691-4581 © 2025 IEEE. All rights reserved, including rights for text and data mining, and training of artificial intelligence and similar technologies. Personal use is permitted, but republication/redistribution requires IEEE permission. See https://www.ieee.org/publications/rights/index.html for more information.

Authorized licensed use limited to: Indraprastha Institute of Information Technology. Downloaded on March 06,2026 at 07:25:29 UTC from IEEE Xplore. Restrictions apply.

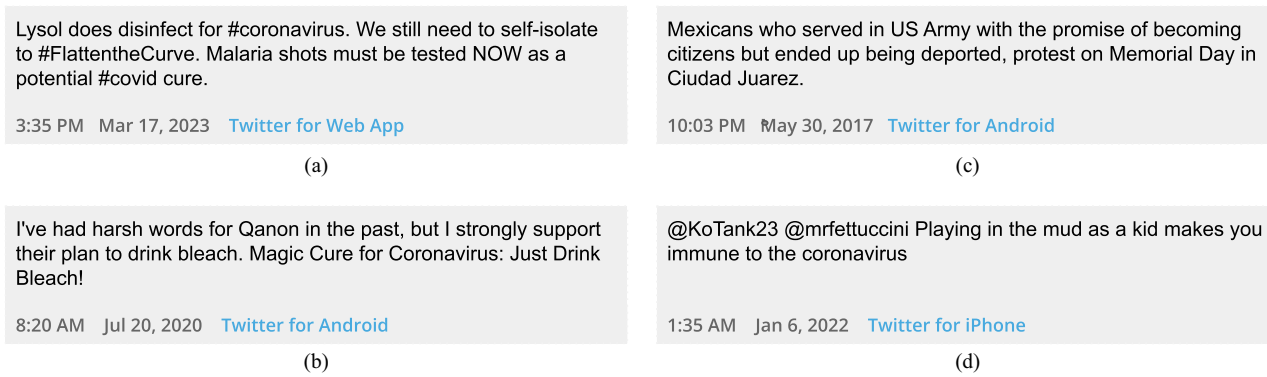

Fig. 1. Examples of check-worthy tweets, with various rationales justifying their check-worthiness. (a) Verifiable information, public interest, needs government's attention. (b) Public interest, harmful, needs fact-checker's attention. (c) Verifiable information, needs government's attention. (d) Public interest, false information.

Over the past few years, research efforts have been devoted to crafting systems that assess the check-worthiness of claims [8], [9], [10]. Numerous studies have pitted these systems, engaging in multiple shared tasks organized by CheckThat! lab [7], [11], [12], [13]. Although these systems have demonstrated remarkable prowess in identifying check-worthy claims, they lack explanations about the decisions made. This absence of explanatory insight often necessitates additional time and effort from fact-checkers, making it challenging to understand why a claim is deemed check-worthy. To address this issue, we introduce "*rationality labels*" in claim check-worthiness estimation for enhanced explainability and more informed decisions. These rationality labels focus on three key aspects: 1) information; 2) social impact; and 3) actionable items. These facets are distilled into a set of six nondisjoint labels—*verifiable information, false information, public interest, harm to society, requiring fact-checker's attention,* and *necessitating government's attention.*

Fig. 1 demonstrates the varying rationality labels associated with the check-worthiness of claims, influencing their prioritization for fact-checking. Example 1(a) presents a claim, "*Lysol does disinfect for #coronavirus. We still need to self-isolate to #FlattentheCurve. Malaria shots must be tested NOW as a potential #covid cure*," which is worth fact-checking; on closer inspection, we find the underpinning reasons as verifiable information, public interest, needs government attention. In contrast, the check-worthy claim in Example 1(b) is harmful to society, as it propagates a false cure for COVID-19. Leveraging these rationality labels in claim check-worthiness determination fosters several benefits for various stakeholders, including the general public, fact-checkers, and policymakers. Fact-checking resources are often limited. By determining these rationality labels, fact-checkers can better allocate resources, focusing on claims that have a greater impact or pose a risk to the public. For content moderators using automated tools, these labels can enhance efficiency by offering a deeper understanding of check-worthy labels. This fine-grained assessment can also enable social media platforms to act appropriately toward these claims, promoting transparency.

A. Task Formulation

The objective is to develop a unified classification system tasked to identify check-worthy claims. Additionally, we seek to identify the underlying rationale behind the decision. We strive to enhance the claim check-worthiness objectives with additional fine-grained rationality labels that would aid in defining the plausible reasons for the check-worthiness determination. Inspired by Alam et al. [14], we devise six rationality labels that align most with the final claim check-worthy decision, keeping in sight the viewpoints of policymakers, society, and manual fact-checkers. Let us consider $D = \{(x_1, y_1, R_1), (x_2, y_2, R_2), ..., (x_n, y_n, R_n)\}$ be the set of n labeled instances. Each instance in the dataset is a triplet where $x_i = \{w_1, w_2, ..., w_m\}$ denotes the input claim comprising of m words, $y_i \in \{$*check-worthy, noncheck-worthy*$\}$ denotes the check-worthiness label. Accompanying the check-worthiness label, $R_i = \{$*verifiable information, false information, public interest, harmful, need fact-checkers' attention, government's attention*$\}$ signifies the set of k rationality labels of claim x_i. For $y_i =$ *noncheck-worthy*, we do not consider rationality labels and hence $R_i = \phi$. These rationality labels are not mutually exclusive and can overlap, reflecting the multifaceted and often interrelated reasoning factors that inform the assessment of a claim's check-worthiness. The objective is to build a multilabel classifier F that maps an input text instance x_i to the set of rationality labels R_i and discerning the overall check-worthy label y_i.

B. Our Contributions

Our contributions through this work.

a) We propose a novel task of explainable claim check-worthiness and curate a large manually annotated dataset comprising over $5.9k$ claims, with check-worthiness and rationality labels.

b) We propose `CheckMate`, a unified framework for explainable claim check-worthiness detection. This unified approach not only produces a claim check-worthiness

Authorized licensed use limited to: Indraprastha Institute of Information Technology. Downloaded on March 06,2026 at 07:25:29 UTC from IEEE Xplore. Restrictions apply.

label but also furnishes accompanying rationality labels, enhancing the depth and transparency of the assessment.

c) We present an extensive comparison and error analysis to quantify the efficacy of our proposed approach to the state-of-the-art baseline systems.

II. Related Work

Through rapid information release and consumption, social media has greatly aided the democratization of information distribution. Simultaneously, the lag in information verification has become rampant and flooded, severely affecting people's lives, social stability, and even national security.

Over 200 fact-checking organizations worldwide, including PolitiFact, Snopes, and Full Fact, have launched initiatives to perform manual fact-verification.[1] Unfortunately, these efforts are inadequate, given the magnitude of misinformation disseminated through multiple online communication channels. To combat this deluge of misinformation, several studies have addressed this issue of fact-checking through several automated downstream tasks [5], [15], [16]. Recent studies have focused on various subtasks around fact-checking, ranging from automatic identification of claims to extracting evidence to establish claim veracity. It is not easy, not only for humans but also for automated systems, to fact-check every claim, which necessitates segregation of check-worthy content online, saving the valuable time and resources of manual fact-checkers and automated systems. Thus, the first and most significant step in fact-checking is to determine whether a piece of text is worth fact-checking. The task of identifying check-worthy claims has drawn the attention of numerous researchers [10], [17], [18]. Until now, these studies have primarily been divided into the following two categories.

A. Check-Worthy Claims in Political Discourse and Debates

The first category focuses on identifying check-worthy claims in debates or political speeches. With a pioneering attempt by Hassan et al. [19], claim check-worthiness detection has emerged as a major research area in recent years. They developed ClaimBuster, the first-of-its-kind system to target a claim's check-worthiness in a debate. It was trained on a massive manually annotated dataset of US election debates from 1960 to 2012, totaling 30 debates and $28,029$ transcribed sentences. Each statement made during a political discussion was categorized into one of three categories: nonfactual, unimportant factual, or check-worthy factual. Focusing on the 2016 US Presidential debates, Gencheva et al. [17] obtained binary annotations for check-worthiness from various fact-checking organizations. Later, they developed ClaimRank, which was trained on additional data, including Arabic content. Vasileva et al. [10] used a multitask learning neural network. The task was to predict whether a sentence would be selected for fact-checking by each of the nine different fact-checking organizations, namely CNN, The Washington Post, PolitiFact, FactCheck, ABC, NPR, NYT, Chicago Tribune, and The Guardian. The CheckThat! Lab has organized similar shared tasks since 2018, focusing on political debates and speeches [7], [12], [13]. Recently, Ivanov et al. [8] investigated the use of the audio modality as an extra input for detecting check-worthy claims in political discourse.

Research on estimating claim-worthiness in debates and political speeches has been thoroughly studied and made substantial progress. Due to the lack of structure and proper linguistic properties, these approaches do not work well for noisy social media texts.

B. Check-Worthy Claims in Social Media Posts

The social media expansion has boosted the preponderance of false and misleading claims; as a result, current research has turned to identifying claim check-worthiness in social media. To address this, in their recent editions, CheckThat! Labs organized shared tasks on identifying check-worthy claims with a primary focus on social media texts [7], [11], [12], [13]. These shared tasks attracted multiple systems modeled to handle noisy text from social media platforms. The 2020 edition featured three central tasks: detecting previously fact-checked claims, evidence retrieval, and actual fact-checking of claims. Along with English, they offered the tasks in Arabic and Spanish. For Arabic, several teams improved pretrained models, such as AraBERT and multilingual BERT. In the case of the English task, multiple systems harnessed the strength of pretrained Transformers, specifically BERT and RoBERTa. Other methods extracted tweet embeddings from tweets using pretrained models such as GloVe and Word2Vec, which were then fed into a neural network or an SVM. The top-ranked system in the 2021 edition also leveraged transformer-based models [7]. The first shared task in the 2022 edition was anticipating which Twitter posts should be fact-checked, emphasizing COVID-19 and politics. It was put forth in Arabic, Bulgarian, Dutch, English, Spanish, and Turkish [13]. A total of 19 teams competed, with the majority of submissions achieving significant improvements over baselines using Transformer-based models such as BERT and GPT-3. Alam et al. [14] created a multiquestion annotation schema of COVID-19 tweets structured around seven claim check-worthiness questions.

While better models for detecting claim check-worthiness are constantly being developed, there is a lack of literature on the explainability aspects of these binary decisions. Inspired by the annotation schema proposed by Alam et al. [14], we take it a step further and attempt to back the binary label decision with rationality labels, forging a new task of fine-grained claim check-worthiness. We define these rationality labels in the following section.

III. Dataset

Several check-worthy claim detection datasets have been released in recent years [7], [13], [18]. Previous datasets commonly categorize complete sentences or documents as check-worthy, but they frequently lack the detailed criteria needed to measure and support the reasons why a claim should be deemed check-worthy. Consequently, this complicates the task for fact-checkers in comprehending the reasons behind the need

[1] www.politifact.com, www.snopes.com, www.fullfact.in

Authorized licensed use limited to: Indraprastha Institute of Information Technology. Downloaded on March 06,2026 at 07:25:29 UTC from IEEE Xplore. Restrictions apply.

TABLE I
COMPREHENSIVE TAXONOMY FOR RATIONALITY LABELS IN THE EXPLAINABLE CHECK-WORTHINESS TASK, INCLUDING DEFINITIONS AND EXAMPLES

	Rationality Label	Definition	Example
Information	R_1. **Verifiable information**	Containing verifiable factual details, such as definitions, statistics, or law references.	*Approximately 40% of the global population uses Twitter.*
	R_2. **False information**	Statements or claims that are subject to scrutiny to determine if they contain inaccuracies.	*Drinking bleach can cure COVID-19.*
Social Impact	R_3. **Public interest**	Information relevant to the broad public, encompassing topics such as health, safety, and government measures.	*Forty-one laborers trapped in a tunnel in Uttarakhand for 17 days have been rescued.*
	R_4. **Harmful**	Claims that could potentially cause harm to individuals, communities, or society at large.	*Skipping vaccines is the key to natural immunity. Say no to vaccines!*
Actionable	R_5. **Needs fact-checker's attention**	Claims demanding the expertise of a qualified fact-checker for the verification.	*COVID-19 is the same as the common cold or the seasonal flu.*
	R_6. **Needs government's attention**	Statements that merit attention from authorities who can address or manage the potential consequences at a larger scale.	*Critical health crisis ignored by government officials! They're hiding the truth.*

to verify a claim and determining the order of importance for conducting the final verification and making a judgment. To fill this void, we propose `CheckIt`, a large-scale manually annotated Twitter corpus with check-worthiness and rationality labels. we provide a brief overview of our proposed taxonomy for rationality labels, followed by a detailed description of the annotation process.

A. Rationality Labels

We develop the initial version of a taxonomy designed to categorize rationality labels for the task of explainable claim check-worthiness. Drawing inspiration from the well-founded literature provided by Alam et al. [14], we structure our taxonomy to align with their established theoretical framework. We present a detailed overview of the proposed rationality labels along with their definitions and examples in Table I.

We focus on identifying various rationality labels that offer insights into the different dimensions and reasoning factors behind a check-worthy label. These labels serve as indicators of the multifaceted aspects that contribute to the overall evaluation of a claim's check-worthiness and relevance in fact-checking. We formally define these labels as follows:

▷ R_1. *Verifiable Information:* This label is affixed to claims containing factual details that can be verified, such as definitions, statistics, and law references, prompting a closer inspection of their accuracy. ▷ R_2. *False Information:* Statements falling under this category are scrutinized to ascertain whether they seem to present inaccuracies, contributing to determining their check-worthiness. ▷ R_3. *Public Interest:* Claims under this label encompass information of broad public concern, including details about potential COVID-19 cures, updates on case numbers, government measures, and discussions involving rumors or conspiracy theories. ▷ R_4. *Harmful:* This label is applied to claims that could potentially cause harm to society, prompting a focused investigation. ▷ R_5. *Needs Fact-Checker's Attention:* Statements in this category demand the expertise of a qualified fact-checker for verification, signifying a nuanced level of complexity beyond the purview of novice verification. ▷ R_6. *Needs Government's Attention:* Claims designated under this label trigger deliberation on whether the target text warrants bringing to the attention of government entities, underscoring their potential impact on a larger scale.

In essence, our proposed rationality labels are a comprehensive exploration into the specific attributes that render a claim check-worthy, providing an in-depth understanding of its rationale. These rationality labels encapsulate varied dimensions; hence, they are not mutually exclusive. Additionally, while designed for social media claims, these labels are flexible enough for use in various other domains such as medical, political, and general contexts. Following domain-specific nuances, the labels can be easily adapted without complex manual effort. For example, in politics, claims with significant government attention might warrant a higher label weight.

B. Dataset Selection and Annotation

We source the tweets from a recently released Twitter dataset by Sundriyal et al. [15], which provides tweets marked with claim spans. A *claim span* is the specific phrase that makes an assertion. For ease, we will use *claim* to denote these *claim span* within the tweets. According to our observations, each claim within a tweet has a different relevance and must be validated separately. Thus, we annotate each claim rather than the entire tweet for our task. We progressed through three iterations of refinements to attune the dataset better. Three annotators carried out the annotations. The annotators included two master's students and one PhD student, aged 21 to 25, all with linguistic expertise. During the first iteration, each annotator assesses a batch of 50 randomly selected claims and labels them for rationality and check-worthiness labels. Following that, in the second iteration, they first discuss and resolve ambiguous cases—instances where at least one annotator's labels differ from those given by the other two annotators. After resolving

Authorized licensed use limited to: Indraprastha Institute of Information Technology. Downloaded on March 06,2026 at 07:25:29 UTC from IEEE Xplore. Restrictions apply.

TABLE II
DATASET STATISTICS OF CHECKIT

Dataset	Check-Worthy	Noncheck-Worthy
Training	2677	1467
Validation	574	314
Testing	573	315
Total	3824	2096

TABLE III
STATISTICS ON SIX RATIONALITY LABELS. FC DENOTES FACT-CHECKER

Rationality Label	Training		Validation		Testing	
	Yes	No	Yes	No	Yes	No
Verifiable information	2336	1808	509	379	516	372
False information	2535	1609	602	286	662	226
Public interest	2910	1234	609	279	630	258
Harmful	1690	2454	358	530	438	450
Needs FC's attention	2076	2068	380	508	443	445
Needs govt's attention	1711	2433	368	520	416	472

Note: These rationality labels are not mutually exclusive.

these cases, they repeat the same process with an additional set of 50 samples. Finally, in the third iteration, they annotate 100 claims and obtain an average inter-annotator agreement score of 0.73 (Cohen Kappa).

C. Dataset Statistics and Analysis

We annotated 5920 claims in total. We split `CheckIt` into three sections—training set, validation set, and test set—with a 70:15:15 split. The summary of dataset statistics is shown in Table II. The statistics of six rationality labels are depicted in Table III. Each rationality label has a broadly consistent distribution, except for *harmful* and *needs government's attention* R_6, where the distribution is slightly skewed toward *No*. The slightly skewed distribution toward *No* label in *harmful* indicates that most online claims may not seen as directly harmful. This implies that a significant portion of the questionable claims may not be flagged immediately by content moderators and require more nuanced analysis besides the harmfulness. The label *needs government's attention* examines whether a claim requires government intervention. It is critical to recognize that most of the misinformation on the internet targets the general public rather than necessitating direct government intervention. Thus, the distributions seen in these two labels reflect these inherent biases observed in the context of social media platforms. More details on the dataset samples and other existing datasets can be found in the Supplementary.

IV. METHODOLOGY

Previously, the narrative on claim check-worthiness detection was primarily contextual or linguistic. To achieve our goal of utilizing both, we propose an integrated model, `CheckMate`. It combines linguistic features obtained from part-of-speech (POS) tags and dependency parsing with contextual factors extracted from the transformer-based model, BERT. The goal is to leverage structure-specific linguistic features in a joint-learning framework to enhance the accuracy and interpretability of claim check-worthiness detection. Interpretability stems from assigning rationality labels based on predefined, domain-informed criteria, ensuring the model's decisions are transparent and explainable. While the primary focus is optimizing the performance of check-worthiness labels, rationality labeling ensures logical consistency and interpretability.

A high-level architecture of our proposed model is shown in Fig. 2. It has two main components—CoNet, consisting of the BERT framework, a module to optimize six attention heads of BERT (one attention head per rationality label) and obtain the contextual features, and LiNet to incorporate linguistic features emanating from POS tags and dependency trees (Dep). Following, we provide the intricate details of the aforementioned modules of the proposed model. Fig. 2 depicts the high-level architecture of our proposed model, `CheckMate`, for explainable claim check-worthiness. The model consists of two primary modules: a contextual network (CoNet) and a linguistic network (LiNet). CoNet is a transformer-based architecture intended to extract contextual elements of the text while also optimizing the six attention heads of BERT corresponding to the six rationality labels. LiNet considers linguistic features retrieved from POS tags and Dep.

A. CoNet

The CoNet module includes a BERT model to extract the contextual features of the input claim. We use the BERT model with six attention heads and fine-tune the entire model during training. We hypothesize that assigning one attention head to each rationality label will assist the model in catering to each label specifically.

To begin with, we tokenize every i^{th} input text $x_i = \{w_1, w_2, ..., w_m\}$. x_i is transformed into a high-dimensional vector through an embedding function E, where $E(x_i) \in \mathbb{R}^d$ and d represents the embedding dimension. The embedding function E uses BERT to capture the semantic nuances of the input text. To preserve the language's sequential nature, we incorporate positional encodings P into these embeddings, effectively allowing the model to maintain awareness of the tokens' positions within the sequence. CoNet's multiheaded attention mechanism uses learned projection matrices W^Q, W^K, and W^V for each head j to create interaction between queries Q, keys K, and values V. The attention function for head j is computed as follows:

$$\text{Att}_j(Q, K, V) = \text{softmax}\left(\frac{QW_j^Q \cdot (KW_j^K)^T}{\sqrt{d_k}}\right) VW_j^V \quad (1)$$

where d_k is the dimensionality of the key vectors. The outputs from each attention head are concatenated to generate a unified contextual representation C for the entire sequence.

B. LiNet

Building upon the utilization of linguistic features for better-comprehending claims, as shown by Gupta et al. [20], we

Authorized licensed use limited to: Indraprastha Institute of Information Technology. Downloaded on March 06,2026 at 07:25:29 UTC from IEEE Xplore. Restrictions apply.

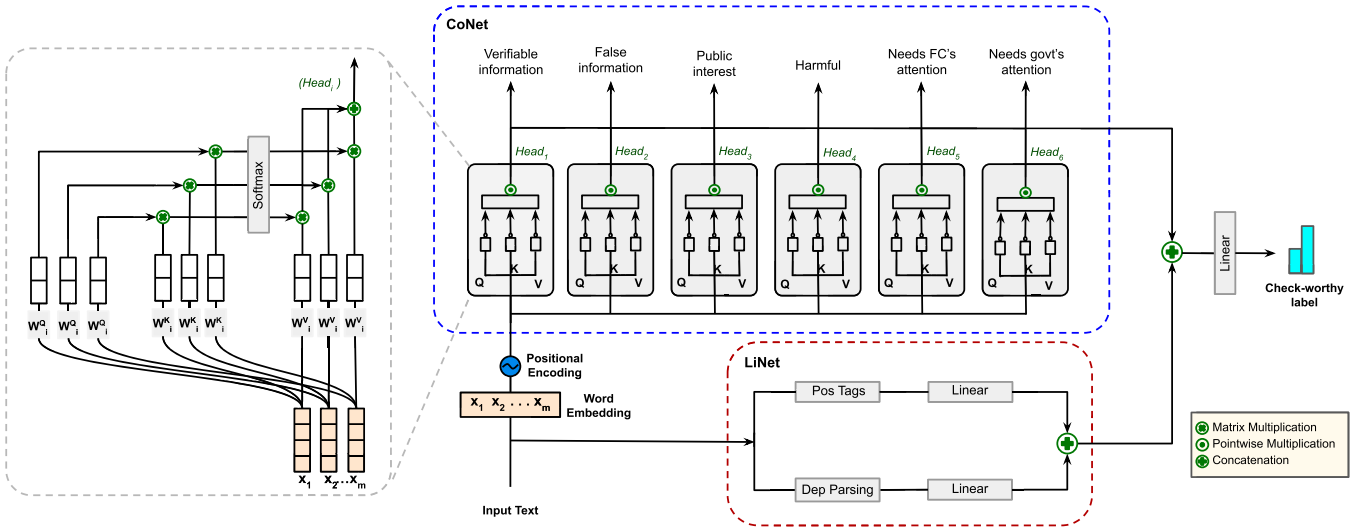

Fig. 2. Architecture of our proposed model, `CheckMate`, for detecting fine-grained claim check-worthiness. The model is divided into two modules: CoNet and LiNet. CoNet aims to capture contextual features of the input text, whereas LiNet seeks linguistic features.

also incorporate linguistic features into our model. The LiNet module seeks to extract linguistic information from the input text by employing two critical linguistic constructs: POS tags and dependency parse trees. For each ith input text $x_i = \{w_1, w_2, ..., w_m\}$, we acquire a series of associated POS tags, yielding the set $\{p_1, p_2, ..., p_m\}$. We employ a pretrained POS tagger from the SpaCy library. In POS tagging, the grammatical and syntactic analysis is facilitated by the assignment of identifiers to each word, such as determiner, noun, verb, and so on. For instance, the POS tag list for the sentence "*the vaccine is effective*," would be {*determiner, verb, adjective*}. These identifiers aid in the identification of the function of each word in the sentence and provide essential information for subsequent processing. After that, dependency parsing is used to abstract the input text's grammatical structure. It discovers the related words and derives a directed relation, $d(w_j, w_k)$, between any two tokens w_j and w_k, in which w_j is the head and w_k is the dependent. It is represented as triple $(w_k, w_j, d(w_j, w_k))$. For the sentence "*the vaccine is effective*," the dependency relations are represented as {*(the, vaccine, det), (vaccine, is, nsubj), (is, ROOT, root), (effective, is, acomp)*}. From these triples, we derive the head list {*vaccine, is, ROOT, is*}, which provides a flattened view of the keywords and their syntactic roles. We utilize Python's SpaCy library to obtain these dependency relations. To capture contextualized representations of the words, we embed vectors resulting from the POS tagging and dependency parsing stages using BERT.

Let $\mathbf{h}_{\text{CoNet}}$ and $\mathbf{h}_{\text{LiNet}}$ represent the embeddings produced by CoNet and LiNet, respectively. These are combined as follows:

$$\mathbf{h}_{\text{combined}} = concat(\mathbf{h}_{\text{CoNet}}, \mathbf{h}_{\text{LiNet}}) \tag{2}$$

The final check-worthiness label $\hat{y}$ is then predicted using:

$$\hat{y} = \text{softmax}(W \cdot \mathbf{h}_{\text{combined}} + b) \tag{3}$$

where W is the weight matrix and b is the bias.

The training process minimizes the loss function $\mathcal{L}$ that measures the discrepancy between the predicted labels $\hat{y}$ and the true labels y.

$$\mathcal{L} = -\sum_i y_i \log(\hat{y}_i) \tag{4}$$

where y_i is the true label and $\hat{y}_i$ is the predicted probability for class i. The gradients of this loss function with respect to the parameters of CoNet and LiNet are computed, and optimization is performed to update the parameters to minimize $\mathcal{L}$. This ensures that both modules are trained jointly to improve the final prediction accuracy.

V. Experiments and Results

A. Baseline Systems

To assess and contrast the performance of our proposed system, `CheckMate`, we compare its performance through two distinct setups. In the first setup (coarse-grained), we compare the results for binary claim check-worthiness labels against existing state-of-the-art claim check-worthiness systems models. For the second setup, six rationality labels (R_1–R_6) are deemed independent tasks compared with several traditional classification models. We use the following baseline systems:

1) *AI Rational* [21]: The first rank at CLEF-2022 was bagged by the team AI Rational. They refined several pretrained transformer models, including BERT, DistilBERT, and RoBERTa. Their best model, however, made use of RoBERTa-large.
2) *PoliMi FlatEarthers* [22]: The authors used a pretrained GPT-3 model and fine-tuned it for the CLEF-2022 challenge; they ranked third for the shared task of claim check-worthiness.
3) *NLPIR@UNED* [23]: The authors proposed a transformer-based approach that ranked first in task 1 at CLEF-2021. They reported BERTweet as their best submission.

Authorized licensed use limited to: Indraprastha Institute of Information Technology. Downloaded on March 06,2026 at 07:25:29 UTC from IEEE Xplore. Restrictions apply.

4) *Fight for 4230* [24]: The runner-up of the CLEF-2021 challenge utilized various preprocessing techniques, including normalizing punctuation to English, removing all links and non-ASCII, and so on. Their best submission leveraged BERTweet architecture along with a dropout and a classifier layer.
5) *Accenture* [25]: Team Accenture bagged the first position in the shared task 1 in CLEF-2020. The best model of the three models they suggested (BERT, BERTweet, and RoBERTa) was RoBERTa with additional pooling and classification layer.
6) *Team Alex* [26]: The system placed second in the CLEF-2020 challenge by using preprocessing techniques such as splitting hashtags into separate words, unifying COVID-19 hashtags, replacing "@" with "user," and so on. Furthermore, two additional methods were tested: Corona Preprocessing and SW+C Preprocessing.
7) *BERT*: We fine-tune BERT, a bidirectional transformer-inspired auto-encoder language model, for our task of check-worthiness detection.
8) *RoBERTa*: RoBERTa is a robustly optimized variant of BERT with an improved training methodology. Such as BERT, we also fine-tune RoBERTa for our downstream task of claim check-worthiness.
9) *XLNet*: XLNet is also a bidirectional transformer-inspired language model such as BERT, the only difference being that the latter is an auto-regressive language model.
10) *BERTweet*: BERTweet is a large-scale language model pretrained for English Tweets. It is trained based on the RoBERTa pretraining methodology and uses a huge corpus of 850M English Tweets.

Apart from the existing state-of-the-art systems, we also explore several traditional machine learning models, such as logistic regression (LR), multinomial Naive bayes (MNB), random forest (RF), and support vector machine (SVM). We leverage the pretrained model of Word2Vec to obtain embeddings for the tweets, which we feed into these models. The experimental setup is detailed in the Supplementary.

B. Experimental Setup and Evaluation Measures

We set the maximum length of input posts to 128 tokens. We optimize the performance of `CheckMate` on the validation set by adjusting certain hyperparameters. After careful consideration, we select the optimum configuration for all hyperparameters. This configuration includes a dropout rate of 0.25, a learning rate of 0.001, and a batch size of 8. The model is trained for a maximum of 20 epochs, using early stopping with a patience of 5. We utilize *Adam* as the optimizer, employing a decay rate of 0.001, and a linear scheduler with warm-up. For baseline systems, we maintain consistency by keeping most of the hyperparameters the same as mentioned in the original papers. For evaluating claim check-worthiness, we select F1-scores as the primary metric because they offer a balanced assessment of a model's precision and recall. To better comprehend the performance of the systems to detect check-worthy claims, we also report accuracy and classwise F1-scores. We hinge on the macro F1-score corresponding to each rationality label.

C. Experimental Results

Even for humans, let alone automated systems, it can be challenging to discern check-worthy claims due to the high degree of subjectivity. We summarize the aggregated results on the test set in Table IV. Evidently, `CheckMate` effectively outperforms all existing baseline systems. When considering binary check-worthiness labels, `CheckMate` achieves the highest macro F1-score of 78.02% compared to other baseline systems. Most of the baseline systems have low F1-scores for noncheck-worthy claims. However, our model receives an F1-score of 70.45% for the noncheck-worthy class, indicating strong performance in the minority class as well. `CheckMate` accounts for a 0.38% boost in macro F1-score over the second-best performer, XLNet. There is also a considerable gain in accuracy—our model has an accuracy of 80.63%, which is 0.56% higher than the second-best performer, XLNet. It is important to note that XLNet requires training and maintaining seven separate models—one for check-worthiness and six for rationality labels—adding significant complexity. Additionally, we tested a multilabel version of XLNet, which achieved a macro-F1 score of 76.51%, compared to 77.78% for the separate seven-model configuration in the earlier setup. A palpable gain of about $5-10\%$ across all metrics is ascertained from the classical machine learning architectures to the transformer-based models of BERT, RoBERTa, and so on This, in turn, emphasizes the significance of employing contextual word embeddings and transformer-based architectures for the task at hand.

1) Effectiveness of Joint Learning: To further assess the performance of our model on rationality labels, we compare it with several traditional classification baselines. For this evaluation, we treat the six rationality labels as individual classification tasks within the baseline model. The results of this comparison are provided in the last six columns of Table IV. Upon examining the results, it is evident that there is no single model that consistently outperforms all six rationality labels; however, our model performs well for the majority of them. It is worth noting that our model, `CheckMate`, achieves the highest scores on three rationality labels (R_1, R_4, and R_5) and also has competitive results on R_2 and R_3. The label R_2 measures the accuracy of our model in identifying false information. Although our model does not attain the highest F1-score for this label, it performs competitively by obtaining the second-highest value. This modest variation can be ascribed to the intrinsic challenge of discerning false information, which is frequently contingent on the context and necessitates a nuanced understanding of real-world knowledge. Similarly, the F1-score for R_3 demonstrates the efficacy of our approach in detecting statements that are of significant public interest. Despite the potential uncertainty in classifying public interest issues, our model achieves a high F1-score in this category, showcasing its ability to identify such assertions accurately. The label R_6, mentioning "Needs Government's Attention," is most intricate

Authorized licensed use limited to: Indraprastha Institute of Information Technology. Downloaded on March 06,2026 at 07:25:29 UTC from IEEE Xplore. Restrictions apply.

TABLE IV
PERFORMANCE COMPARISON OF CHECKMATE AGAINST BASELINE SYSTEMS USING OUR DATASET, CHECKIT

Model	Check-Worthiness Label				Rationality Labels					
	Acc	***m*-F1**	***cw*-F1**	***ncw*-F1**	R_1	R_2	R_3	R_4	R_5	R_6
AI Rational [21]	0.7905	0.7606	0.8453	0.6760	-	-	-	-	-	-
PoliMi FlatEarthers [22]	0.7579	0.7292	0.8173	0.6411	-	-	-	-	-	-
NLP&IR@UNED [23]	0.7905	0.7674	0.8408	0.6941	-	-	-	-	-	-
Fight for 4230 [24]	0.7860	0.7585	0.8401	0.6769	-	-	-	-	-	-
Accenture [25]	0.7939	0.7647	0.8476	0.6817	-	-	-	-	-	-
Team Alex [26]	0.7872	0.7653	0.8369	0.6937	-	-	-	-	-	-
LR	0.7570	0.7055	0.8287	0.5823	0.7313	0.6816	0.7640	0.7362	0.6913	0.7296
MNB	0.7620	0.6960	0.8376	0.5544	0.7183	0.6499	0.7624	0.7136	0.6968	0.7293
RF	0.7430	0.6981	0.8145	0.5817	0.7109	0.6743	0.7689	0.6863	0.6606	0.7110
SVM	0.7699	0.7347	0.8314	0.6053	0.7359	0.7010	0.7743	0.7277	0.6862	0.7247
BERT	0.7714	0.7443	0.8275	0.6611	0.7346	0.6933	0.7857	0.5379	0.7021	0.7208
RoBERTa	0.7838	0.7572	0.8376	0.6768	0.7723	**0.7855**	0.7984	0.7866	0.7497	0.7182
XLNet	0.8018	0.7778	0.8508	**0.7047**	0.7782	0.7631	**0.8050**	0.7527	0.7444	0.7501
BERTweet	0.7894	0.7681	0.8384	0.6979	0.7700	0.7684	0.7845	0.7740	0.7556	**0.7666**
GPT-3	0.7568	0.7205	0.8212	0.6197	0.3503	0.4885	0.5772	0.4341	0.6545	0.5337
`CheckMate` (ours)	**0.8063**	**0.7802**	**0.8559**	0.7045	**0.7858**	0.7733	0.7985	**0.8095**	**0.7658**	0.7421

Note: For binary classification, we report accuracy (Acc), macro F1 (*m*-F1), and class-wise F1-scores for check-worthy (*cw*) and noncheck-worthy (*ncw*) classes. For rationality labels, we report F1-scores for each label (R_1–R_6). The bold type indicates the best performance, while underlined numbers represent the second-best results for each metric. - indicates that the system is specific to binary check-worthiness labeling.

since it entails evaluating whether a claim should be escalated to government authorities. The lower F1-score in this category is a result of the model's cautious approach to identifying claims under this label. It demands a high level of certainty due to the potential implications of misclassifying them. Since claims labeled as needing government attention can have significant implications, the model must achieve a high level of certainty before classifying a claim under this label. The design philosophy of our model emphasizes care in critical areas to prevent excessive escalation, which leads to a slightly lower F1-score in this case. Moreover, while other models may excel at one specific rationality label, our model, `CheckMate`, demonstrates strong performance across the majority of them (R_1, R_2, R_3, R_4, and R_5). This balance ensures that our model can handle a wide variety of claims effectively, making it more versatile and reliable compared to other models that specialize in only one aspect of rationality. This indicates that our model effectively balances various rationality labels together within a single joint learning.

2) Evaluating Large Language Model: We investigate the check-worthiness of social media posts in a fine-grained manner using a robust large language model, specifically GPT-3, via the OpenAI API. We task the model to determine whether *the provided post is worth fact-checking or not*. In the event of an affirmative response, we further seek plausible rationales from the set of suggested rationality labels. The goal of this comprehensive approach is to leverage the language model's capabilities to assess the credibility of social media posts and provide insightful justifications for the determination. However, our findings reveal a substantial performance gap between GPT-3 and our model. GPT-3 produces a macro F1-score of 72.05% for claim check-worthiness, our model outperforms it with a huge margin, scoring 78.02%. Furthermore, for all rationality labels, GPT-3 performs poorly. It struggles most with label R_1, which represents verifiable information and records a macro F1-score of 35.03%, the lowest of any baseline. These stark disparities highlight the limitations of using large language models for subjective and nuanced tasks like check-worthiness estimation. These findings highlight the need for sophisticated dedicated models designed specifically for tasks of this nature.

D. Ablation Study on Rationality Labels

We perform an ablation study to ascertain the impact of the absence of each rationality label on our model's performance in categorizing claims into check-worthy and noncheck-worthy classes. Table V presents the results of the ablation study when one of the six rationality labels (R_1 through R_6) is excluded from `CheckMate`. The scores clearly demonstrate that each label has a significant influence on the overall performance of the final check-worthiness estimation. Removing these labels negatively affects the systems. By excluding R_1, which assesses the verifiability of claims, the model achieves an accuracy of 78.27%, and the macro F1-score 76%. The influence is moderate, suggesting that R_1 plays a balanced yet significant role in the model. However, the elimination of R_2, which specifically targets "*false information*," significantly impairs the model's performance. The accuracy decreases to 59.80%, while the macro F1-score reduces to 57.19%. This suggests that the presence of R_2 is crucial for detecting erroneous information, and its absence greatly weakens the model's capacity to categorize and handle check-worthy claims appropriately. Other labels also have a substantial impact on the model's efficacy. This emphasizes the essential importance of each rationality label

Authorized licensed use limited to: Indraprastha Institute of Information Technology. Downloaded on March 06,2026 at 07:25:29 UTC from IEEE Xplore. Restrictions apply.

TABLE V
ABLATION RESULT FOR CHECKMATE ON OUR DATASET

	Acc	***m*-F1**	***cw*-F1**	***ncw*-F1**
CheckMate	0.8063	0.7802	0.8559	0.7045
$-R_1$	0.7827	0.7600	0.8338	0.6862
$-R_2$	0.5980	0.5719	0.6775	0.4664
$-R_3$	0.7444	0.6964	0.8171	0.5757
$-R_4$	0.6273	0.6179	0.6777	0.5581
$-R_5$	0.7162	0.7064	0.7600	0.6529
$-R_6$	0.6700	0.6699	0.6777	0.6621

Note: The symbol $(-)$ signifies the absence of the respective rationality label from the main model. Accuracy (Acc), macro F1 (*m*-F1), and class-wise F1-scores for check-worthy (*cw*) and noncheck-worthy (*ncw*) classes are reported.

and offers useful suggestions for improving and strengthening the model's capacity.

VI. ERROR ANALYSIS

Due to the highly subjective nature of claims, detecting check-worthy claims over social media platforms poses a difficult challenge. To dive deep into the errors encountered by the models, we perform a qualitative analysis of the error cases. Table VI shows a few randomly selected error instances from the test dataset along with their ground labels and output labels as predicted by CheckMate. To compare, we also examine predictions from the best-performing baseline, XLNet. Both XLNet and CheckMate struggle to identify check-worthy claims in some cases, but CheckMate performs exceptionally well in the majority. In example x_1, which states *Methanol, Ethanol, and Bleach are poisons and drinking them can lead to disability and death*, we see that both systems classify the check-worthiness label correctly but partially misclassify the rationality labels. CheckMate adeptly identifies the information as verifiable; however, erroneously assigns the label necessitating fact-checker attention to the post, potentially influenced by the presence of impactful terms such as "*death*" and "*disability*." It is noteworthy that XLNet also encounters challenges in correctly discerning all the rationales in this instance. While correctly identifying the content of interest to the general public, it overlooks categorizing it as verifiable information, which may mislead fact-checkers into prioritizing other claims for verification. This oversight can potentially lead to inefficiencies in fact-checking efforts and delay the identification and correction of misinformation.

Example x_2, asserts that *virus will die from cow-dung cakes and agarbatti*, which is definitely a check-worthy claim as it contains false information and can harm society. Both models proficiently identify several rationales but falter in pinpointing the need for fact-checkers' attention, a divergence in their approaches becomes apparent. XLNet introduces an additional rationale—*needs government's attention*. This raises intriguing questions about the model's interpretative lens, prompting consideration of whether this expansion aligns with a broader understanding of the content or introduces a spurious element. Conversely, CheckMate adopts a more cautious stance, offering a partially correct classification and refraining from making further inferences. This prudent approach opens avenues for discussing the tradeoff between assertiveness and precision in model predictions. It prompts consideration of whether a more conservative model, avoiding unwarranted inferences, may yield a more reliable and nuanced decision-making process. This nuanced understanding lays the groundwork for refining the models and advancing the discourse on the complexities of rationality label prediction in fine-grained setups. We witness similar behavior in the next example, where our model correctly identifies all the rationality labels while XLNet generates extra rationality labels.

Example x_4 and x_5 are noncheck-worthy claims. In x_4, the claim asserts that *No single VIRUS can ever wipe out the entire human race from this earth.* CheckMate correctly labels this claim as *noncheck-worthy*. On the other hand, XLNet marks the claim as *check-worthy*, which contradicts the ground truth. The claim contains the phrase "*wipe out the entire human race*" is open to interpretation regarding the severity or scope of the event. This possibly demonstrates the inability of the model to understand the broader context or implications of the claim. It might not recognize the rhetorical nature of the statement or consider the relevant scientific or historical context. We witness similar behavior from our model in example x_5, which states *if we all stop breathing, the spread would stop.* It follows that our system has difficulty dealing with real-world knowledge and sarcastic statements. The phrase "*spread would stop*" causes the system to pay attention to it and incorrectly predicts it as a check-worthy claim. Given that it discusses one of the life-threatening COVID-19 cures, CheckMate indicates that the claim is check-worthy, as it might interest the general public. However, the rambling writing style can confuse both systems and yield inaccurate predictions.

Examples x_6 and x_7 pose two rhetorical questions with indirect claims. In x_6, uncertainty is introduced by how the rhetorical question is phrased. The term "*real truth*" may mislead models into treating this claim as opinion, hence not requiring factual validation. However, our model correctly labels it as *check-worthy* and suggests the need for government intervention. On the other hand, XLNet fails to identify it as check-worthy. In contrast, x_7 states a rhetorical question that challenges vaccine efficacy, a widely discussed topic of public interest. While both the models correctly classify it as *check-worthy*, they partially get the correct rationality labels. The phrase "*vaccinated people still get sick*" likely caused confusion, as it blends factual elements with misleading intent.

Examining these error cases shows that the fine-grained rationality labels add complexity compared to the simpler coarse-grained check-worthiness labels. However, our model maintains strong accuracy, often making at least one correct prediction for rationality labels.

VII. DISCUSSION

The intricacies surrounding claim check-worthiness underscore several challenges for both human evaluators and

Authorized licensed use limited to: Indraprastha Institute of Information Technology. Downloaded on March 06,2026 at 07:25:29 UTC from IEEE Xplore. Restrictions apply.

TABLE VI
ERROR ANALYSIS OF THE CHECK-WORTHY LABELS OF CHECKMATE

	Claim	**Ground Truth**	**Predictions**	
			CheckMate	**XLNet**
x_1	Methanol, Ethanol, and Bleach are poisons and drinking them can lead to disability and death.	Check-worthy *(verifiable information, public interest)*	Check-worthy *(verifiable information, needs fact-checker's attention)*	Check-worthy *(public interest)*
x_2	Put cow products like cow-dung cakes and agarbatti made from that. Upon using these, the virus will die immediately.	Check-worthy *(verifiable information, false information, public interest, harmful, needs fact-checker's attention)*	Check-worthy *(verifiable information, false information, public interest, harmful)*	Check-worthy *(verifiable information, false information, public interest, needs governments' attention)*
x_3	The virus blocks red blood cells from absorbing and distributing oxygen.	Check-worthy *(verifiable information, public interest, needs fact-checkers' attention)*	Check-worthy *(verifiable information, public interest, needs fact-checker's attention)*	Check-worthy *(false information, needs fact-checker's attention)*
x_4	No single VIRUS can ever wipe out the entire human race from this earth.	Noncheck-worthy	Noncheck-worthy	Check-worthy *(needs fact-checkers' attention)*
x_5	If we all stop breathing, the spread would stop.	Noncheck-worthy	Check-worthy *(public interest)*	Noncheck-worthy
x_6	How many more lives will be lost before the government acknowledges the real truth about vaccines?	Check-worthy *(public interest, needs governments' attention)*	Check-worthy *(needs governments' attention)*	Noncheck-worthy
x_7	If vaccines work, why vaccinated people still get sick? Think about it!	Check-worthy *(verifiable information, public interest, needs fact-checkers' attention)*	Check-worthy *(false information, public interest)*	Check-worthy *(public interest)*

Note: Rationality labels for check-worthy claims are given in brackets and italics. For comparison, we also present the predictions of the best-performing baseline system, XLNet. Errors are highlighted in red.

automated systems. The inherent subjectivity of such claims is exacerbated by the frequent lack of linguistic soundness in these texts, presenting a formidable obstacle. This challenge is further amplified in the context of web-based short texts. By addressing this fundamental problem, our work sets the stage for a nuanced analysis that not only seeks to improve model performance but also sheds light on the underlying rationales of determining claim check-worthiness. The detailed discussion is given in Supplementary.

VIII. CONCLUSION

In this work, we introduced a pioneering task of explainable claim check-worthiness, leveraging rationality labels. The dearth of an adequately annotated dataset has posed a major challenge in explainable claim check-worthiness detection within online social media platforms. To address this limitation, we curated an extensive Twitter corpus comprising over $5k$ manually annotated claims for precise identification of rationality label and check-worthiness label. We benchmarked our dataset with a unified architecture, `CheckMate` that outperformed existing state-of-the-art check-worthiness systems and illustrated how the abetting rationale factors through rationality labels could be used to comprehend more reliable claim check-worthy systems. The results bestowed that our suggested model outperformed the best-performing baselines by $\geq 0.31\%$ in macro F1-score. We illustrated how leveraging different determining factors can lead to more informed decisions about check-worthy labels. Moreover, the incorporation of rationales has the potential to assist manual fact-checkers in prioritizing fact-checking efforts more efficiently. While our current focus has been on English, future endeavors will extend to developing fine-grained claim check-worthiness detection models for other languages, with a particular emphasis on low-resource languages. In our subsequent work, our emphasis will also be on expanding the dataset and broadening the scope by incorporating multimodal elements into the detection framework.

REFERENCES

[1] C. Georgacopoulos and G. Mores, "How fake news affected the 2016 presidential election," Louisiana State University Website, Jul 2020. [Online]. Available: https://faculty.lsu.edu/fakenews/elections/sixteen.php
[2] M. S. Islam et al., "COVID-19–Related infodemic and its impact on public health: A global social media analysis," *Amer. J. Trop. Med. Hyg.*, vol. 103, no. 4, p. 1621, 2020.
[3] P. Atanasova, "Generating fact checking explanations," in *Proc. 58th Annu. Meeting Assoc. Comput. Linguistics*, Jul. 2020.
[4] M. Glockner, I. Staliūnaitė, J. Thorne, G. Vallejo, A. Vlachos, and I. Gurevych, "AmbiFC: Fact-checking ambiguous claims with evidence," *Trans. Assoc. Comput. Linguistics*, vol. 12, pp. 1–18, 2024.

Authorized licensed use limited to: Indraprastha Institute of Information Technology. Downloaded on March 06,2026 at 07:25:29 UTC from IEEE Xplore. Restrictions apply.

[5] J. Thorne, A. Vlachos, C. Christodoulopoulos, and A. Mittal, "Fever: A large-scale dataset for fact extraction and verification," in *Proc. NAACL, HLT*, 2018, pp. 809–819.

[6] I. Augenstein et al., "Multifc: A real-world multi-domain dataset for evidence-based fact checking of claims," in *Proc. EMNLP-IJCNLP*, 2019, pp. 4685–4697.

[7] P. Nakov et al., "Overview of the CLEF–2021 CheckThat! lab on detecting check-worthy claims, previously fact-checked claims, and fake news," in *Proc. CLEF (Work. Notes)*, 2021, pp. 639–649.

[8] P. Ivanov, I. Koychev, M. Hardalov, and P. Nakov, "Detecting check-worthy claims in political debates, speeches, and interviews using audio data," in *Proc. ICASSP*, 2024, pp. 12011–12015.

[9] Y. S. Kartal, M. Kutlu, and B. Güvenen, "Too many claims to fact-check: Prioritizing political claims based on check-worthiness," in *CEUR Workshop Proc.*, 2020.

[10] S. Vasileva, P. Atanasova, L. Màrquez, A. Barrón-Cedeño, and P. Nakov, "It takes nine to smell a rat: Neural multi-task learning for check-worthiness prediction," in *Proc. RANLP*, 2019, pp. 1229–1239.

[11] A. Barrón-Cedeño et al., "The CLEF-2024 CheckThat! Lab: Check-worthiness, subjectivity, persuasion, roles, authorities, and adversarial robustness," in *Proc. ECIR*, 2024, pp. 1–17.

[12] F. Alam et al., "Overview of the CLEF-2023 CheckThat! Lab task 1 on check-worthiness in multimodal and multigenre content," in *Proc. Work. Notes CLEF*, 2023, pp. 219–235.

[13] P. Nakov et al., "Overview of the CLEF–2022 CheckThat! Lab on fighting the COVID-19 infodemic and fake news detection," in *Proc. Work. Notes CLEF*, 2022, pp. 416–428.

[14] F. Alam et al., "Fighting the COVID-19 infodemic in social media: A holistic perspective and a call to arms," in *Proc. ICWSM*, 2021, pp. 913–922.

[15] M. Sundriyal, A. Kulkarni, V. Pulastya, M. S. Akhtar, and T. Chakraborty, "Empowering the fact-checkers! Automatic identification of claim spans on twitter," in *Proc. EMNLP*, 2022, pp. 7701–7715.

[16] M. Sundriyal, T. Chakraborty, and P. Nakov, "From chaos to clarity: Claim normalization to empower fact-checking," in *Proc. Findings EMNLP*, 2023, pp. 6594–6609.

[17] P. Gencheva, P. Nakov, L. Màrquez, A. Barrón-Cedeño, and I. Koychev, "A context-aware approach for detecting worth-checking claims in political debates," in *Proc. RANLP*, 2017, pp. 267–276.

[18] I. Jaradat, P. Gencheva, A. Barrón-Cedeño, L. Màrquez, and P. Nakov, "Claimrank: Detecting check-worthy claims in Arabic and English," in *Proc. NAACL, Demonstrations*, 2018, pp. 26–30.

[19] N. Hassan et al., "Claimbuster: The first-ever end-to-end fact-checking system," in *Proc. VLDB Endowment*, 2017, pp. 1945–1948.

[20] S. Gupta, P. Singh, M. Sundriyal, M. S. Akhtar, and T. Chakraborty, "LESA: Linguistic encapsulation and semantic amalgamation based generalised claim detection from online content," in *Proc. EACL*, 2021, pp. 3178–3188.

[21] A. Savchev, "Ai rational at CheckThat! 2022: Using transformer models for tweet classification," in *Proc. CLEF (Work. Notes)*, 2022, pp. 656–659.

[22] S. Agrestia, A. Hashemianb, and M. Carmanc, "Polimi-flatearthers at CheckThat! 2022: GPT-3 applied to claim detection," in *Proc. CLEF (Work. Notes)*, 2022, pp. 422–427.

[23] J. R. Martinez-Rico, J. Martínez-Romo, and L. Araujo, "Nlp&ir@ uned at CheckThat! 2021: Check-worthiness estimation and fake news detection using transformer models," in *Proc. CLEF (Work. Notes)*, 2021, pp. 545–557.

[24] X. Zhou, B. Wu, and P. Fung, "Fight for 4230 at CheckThat! 2021: Domain-specific preprocessing and pretrained model for ranking claims by check-worthiness," in *Proc. CLEF (Work. Notes)*, 2021, pp. 681–692.

[25] E. Williams, P. Rodrigues, and V. Novak, "Accenture at CheckThat! 2020: If you say so: Post-hoc fact-checking of claims using transformer-based models," 2020, *arXiv:2009.02431*.

[26] A. Nikolov, G. D. S. Martino, I. Koychev, and P. Nakov, "Team Alex at CLEF CheckThat! 2020: Identifying check-worthy tweets with transformer models," 2020, *arXiv:2009.02931*.

Authorized licensed use limited to: Indraprastha Institute of Information Technology. Downloaded on March 06,2026 at 07:25:29 UTC from IEEE Xplore. Restrictions apply.