GEAR SPECIFICATION	
Tool Module	2.0
Tool Pressure Angle	20°
Tool Tip Radius	0.6
Tool Addendum	2.60
No of teeth	17
Center Distance	48.500+0.03
Pitch Diameter(REF)	34.000
Tip Diameter	$40.000^{0}_{-0.1}$
Root Diameter	$30.400^{0}_{-0.1}$
Base circle diameter	31.950
Addendum Modification Coeff.	0.4
Dia of Start of Active Profile	32.656
Root form Diameter	32.131
No of teeth for span	3
Span Measurement	$15.784^{-0.02}_{-0.04}$
Ball Diameter	3.6
Measurement over Balls	$40.243^{-0.040}_{-0.081}$
DIN Class	9
Profile DIN 3972	Profile I
Preferred Final Process	FINISH HOBBED
PCD run out post hobbing	0.030
Radial run out (Fr)	0.045
Composite error (master) Fi	0.030
Composite error (Pair) Fi	0.040
Adjacent pitch error(Fp)	0.018
Cumulative Pitch error (Fp)	0.050
Total Profile error (Fa)	0.022
Total alignment error	0.028
Mating Gear No of teeth	30

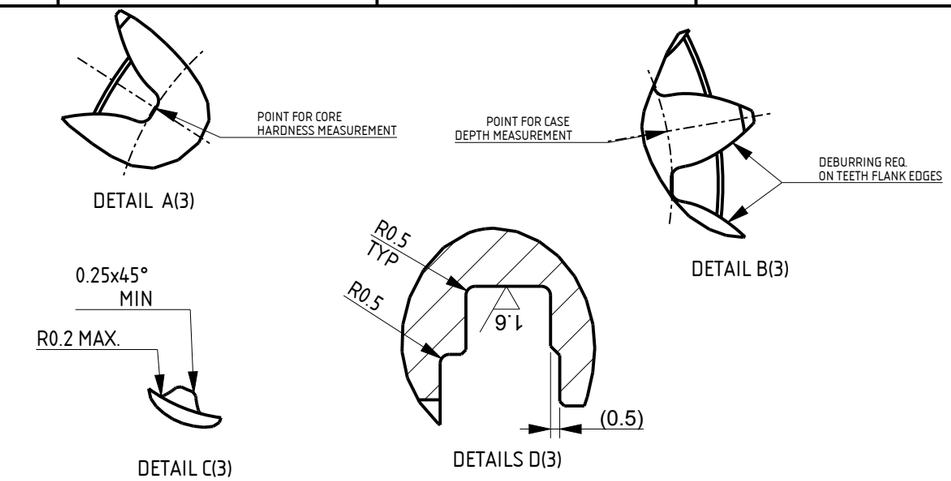

INVOLUTE SPLINE SPEC	
NO OF TEETH	15
PRESSURE ANGLE	20°
MODULE	1.00
MAJOR DIA	$17.000^{+0.100}_{-0}$
MINOR DIA	$15.000^{+0.100}_{-0}$
PROFILE SHIFT COEFF.	-0.790
PIN DIA	2.0
MEASURED BTW PINS	$13^{0}_{-0.070}$

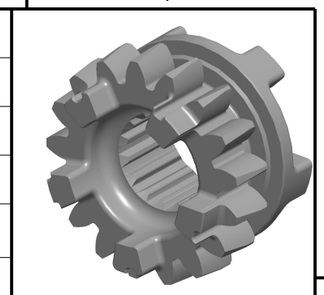

SCALE 1.0

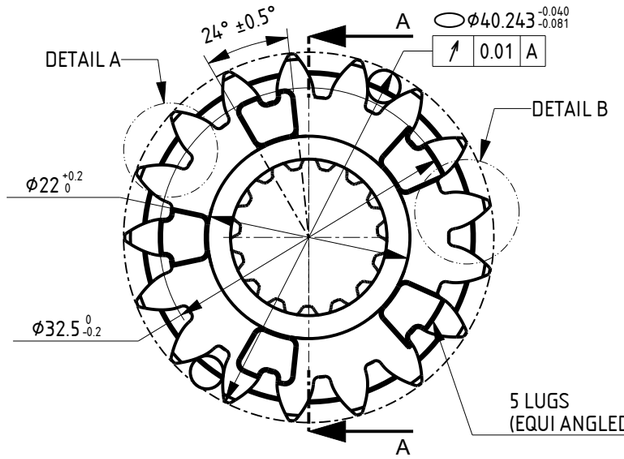

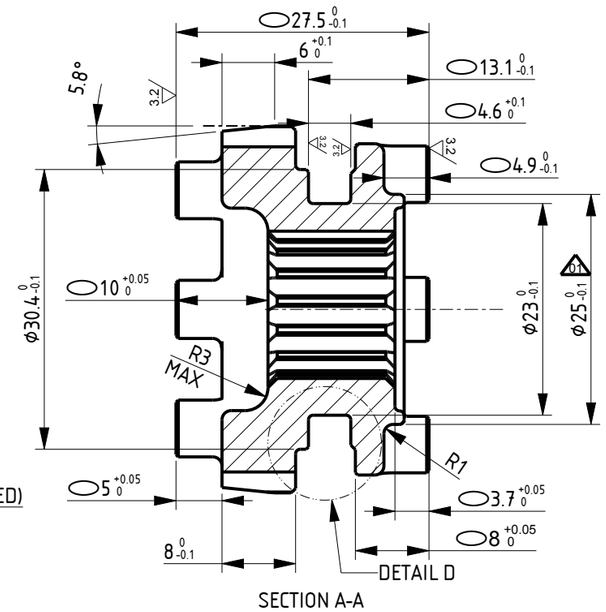

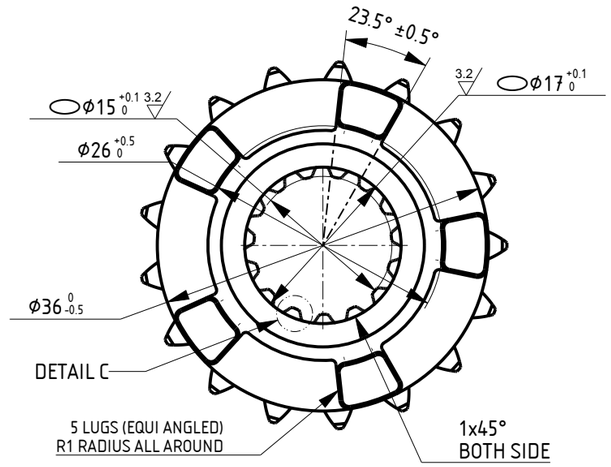

1.6 (3.2,)

Material & Heat treatment	
Material	SCM420H AS PER MaMS 01-01-008
HeatTreatment	CASE CARBURISING AS PER MaMS 02-01-005
Core Hardness	29 to 43 HRC
Measurement Method	For Core Hardness: At The Centre of the tooth at root dia as shown in "DETAIL A"
Surface Hardness	62 to 66 HRC
Case Depth at Tooth Root	At 700VPN: 0.4 mm min. At 550VPN: 0.4 to 0.6 mm min
Microstructure	Fine Tempered Martensite up to 0.4mm depth.Max Allowable Grain Boundry Oxidation is 15micron at Fillet. Retained Austanite: Max. 10% for Wetallographic Method Core Microstructure: Fine Low Carbon Tempred Mertensite.Ne Free Ferrite is Acceptable
Criteria For the Case Depth:	Measured at Gear Tooth Root As Indicated In "DETAIL B". Inspection Method should be As per IS 6416-1971

NOTES: -
1) UNSPECIFIED CHAMFER IS 0.5x45° mm
2) UNSPECIFIED FILLET RADIUS IS 0.5 mm
3) UNSPECIFIED DRAFT ANGLE IS 1°
4) PART SHOULD BE FREE FROM BURRS AND SHARP EDGES.
5) FOR FURTHER DETAIL REFER 3D MODEL.
6) SUPPLY WITH RUST PREVENTIVE OIL.
7). DENOTES CTRITICAL TO(CTQ) QUALITY DIMENSIONS

REV	ZONE	ECN NO	DESCRIPTION OF CHANGES	DES	CHK	APD	DATE
03	-	M1_VE 0050	MATERIAL STANDARDS ADDED IN TABLE				10-05-2023
02	C7	-	DIN CLASS CHANGED FROM 7 TO 9 & GEAR ERROR SPEC UPDATED ACCORDINGLY				05-05-2023
01	D3	-	Φ26 CHANGED TO Φ25 MM, FINAL PROCESS AS SHAPING ADDED				22-04-2023

MATTER

UNSPECIFIED TOLERANCE AS PER MMW STANDARD.

MATERIAL: REFER TABLE		ALL DIMENSIONS ARE IN MM.
SURFACE TREATMENT: REFER TABLE		REFER 3D DATA FILE FOR ADDITIONAL INFORMATION.
HEAT TREATMENT: REFER TABLE		REF STANDARD:
DESIGNER :	DATE: 26-03-2023	VOLUME:11784.465 MM^3
CHKD :	DATE: 26-03-2023	WEIGHT: 0.092 KG
APD :	DATE: 26-03-2023	SCALE: 1.500
PART NO: 01080212-03		REVISION:03
TITLE: GEAR DRIVE 2ND T17 GB2		SHEET: 1 of 1
		SHEET: A3

THIS DRAWING IS SOLE PROPERTYOF MATTER MOTOR WORKS. IT SHOULD NOT BE COPIED OR DISCLOSED TO ANY PERSON OR ORGANIZATION WITHOUT WRITTEN APPROVAL OF MATTER MOTOR WORKS.