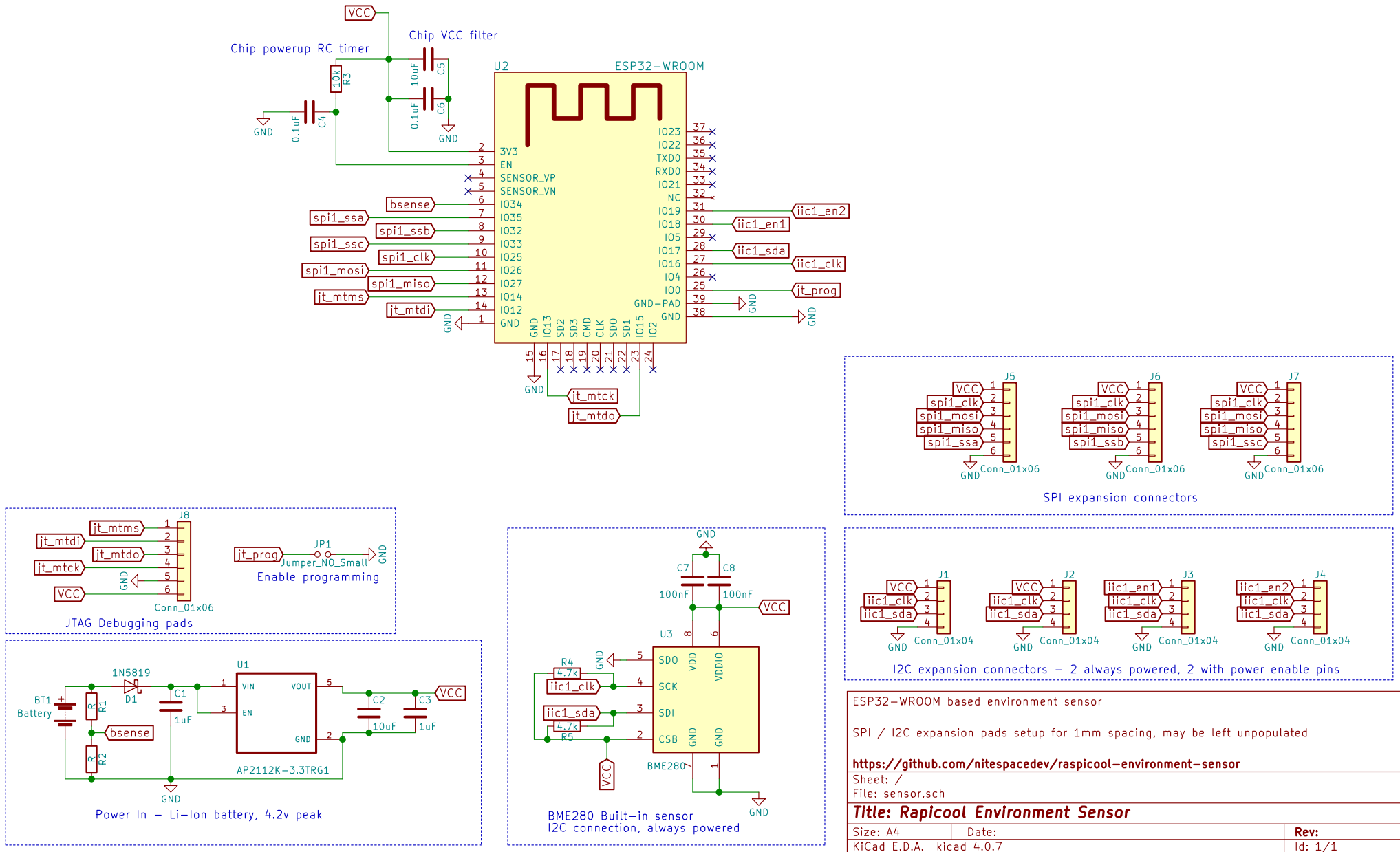

ESP32-WROOM based environment sensor

SPI / I2C expansion pads setup for 1mm spacing, may be left unpopulated

https://github.com/nitespacedev/raspicool-environment-sensor

Sheet: /
File: sensor.sch

Title: Rapicool Environment Sensor

Size: A4	Date:	Rev:
KiCad E.D.A. kicad 4.0.7		Id: 1/1