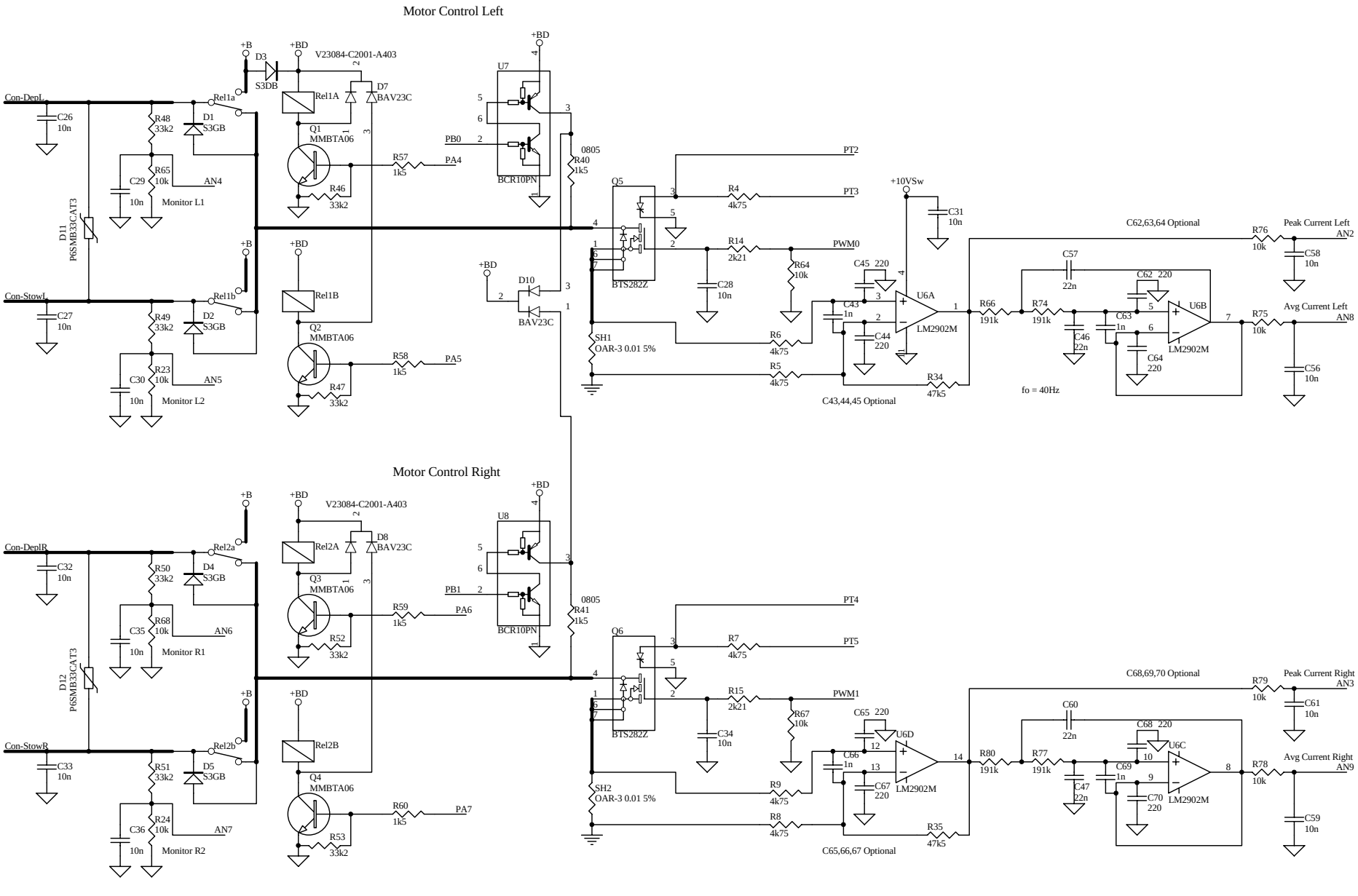

Title	DRB module GM K2XX
Number	Motors
Revision	X1
Designed by	Z. Piotrowski
Drawn by	Z. Piotrowski
Date	16-Aug-2011
Sheet	4 of 5
File	D:\PROJECTS\GM\K2XX\SC\MOTORS.SCH

DECOMA MYTOX
251 Aviva Park Dr.
Woodbridge, ON
L4L 9C1
CANADA