IOP Conference Series:
Earth and
Environmental Science

PURPOSE-LED
PUBLISHING™

PAPER • **OPEN ACCESS**

Automated E-Waste Disposal System Using Convolutional Neural Networks for Classification and Sorting

To cite this article: Sree Devi Kondaveeti *et al* 2025 *IOP Conf. Ser.: Earth Environ. Sci.* **1529** 012032

View the article online for updates and enhancements.

You may also like

- Physicochemical Analysis of Spent Hen Chicken Sausages with Jelly Mushroom *(Auricularia auricula)* Powder Inclusion as a Substitute for *Sodium Tripolyphosphate*
M M Dewi, F H Barido, Puruhita et al.

- Tsunami model of the 2021 Flores earthquake and its impact on Labuan Bajo, East Nusa Tenggara
E H Sudjono, F Novico, S Karima et al.

- Ecological analysis of tree-strata plants in the Pandumaan Sipituhuta Customary Forest Area
M Saraan, Rahmawaty, R H Harahap et al.

This content was downloaded from IP address 49.47.140.188 on 21/02/2026 at 16:51

Automated E-Waste Disposal System Using Convolutional Neural Networks for Classification and Sorting

Sree Devi Kondaveeti[1*], Dr. A. Rama Devi[1], Jagadeesh Kalisetti[1] RamaKoteswara Rao Baratam[1], Bala Adithya Nukala[1]

[1*]Electrical and Electronics Engineering, Velagapudi Ramakrishna Siddhartha Engineering College, Vijayawada, India - 520007

*E-mail: sreedevikondaveeti2004@gmail.com

Abstract. E-waste management in India faces a lot of challenges due to improper disposal that results in environmental hazards. An automated e-waste disposal system is proposed which uses Convolutional Neural Network (CNN) for classification. The system consists of a Raspberry Pi, a camera module, a servo motor and an ultrasonic sensor. This CNN model classifies images of e-waste items, which the camera takes, in recognizing different classes of e-waste with a very high degree of accuracy. The system automatically sorts items into appropriate bins based on the result of classification for efficient recycling. Machine learning algorithms are implemented in the estimation of the recyclability of materials, which improves sorting and reduces the need for human labor. The system attains a 95% accuracy rate in the classification of ewaste and improves resource recovery, reducing the environmental impact due to inappropriate disposal.

1. Introduction

The rapid advancement of technology has increased e-waste, including discarded electronic devices with hazardous materials. Improper disposal poses severe environmental and health risks [1-5]. Traditional e-waste management methods, including manual sorting and recycling, are inefficient and unsustainable [2].Machine learning (ML) provides a highly promising solution in automating and optimizing e-waste sorting, classification, and recycling procedures with high accuracy [6-10]. ML algorithms can find and classify e-waste by material components, increasing efficiency while reducing the environmental burden [7]. Further, in waste estimation, ML-driven prediction models help to carry out strategic methods of disposal [11-15]. Automation and processing involved in real-time e-waste management are further improved using Raspberry Pi 4.This paper presents an ML-based automatic E-waste disposal system for efficient sorting and classification, which provides a sustainable solution to the global crisis of ewaste.

2. Methods and materials

2.1 Dataset size

The e-waste dataset used in this study has been divided into three subsets: a training set, a validation set, and a test set. The training set consists of 2,400 images equally distributed into the 10 different classes of e-waste. Both validation and test sets are used in the evaluation of the model during and after training, respectively. The exact size of these subsets depends on the strategy in use for dataset splitting, where the validation and test sets will include proportional

Content from this work may be used under the terms of the Creative Commons Attribution 4.0 licence. Any further distribution of this work must maintain attribution to the author(s) and the title of the work, journal citation and DOI.
Published under licence by IOP Publishing Ltd

representations of all classes. All images are saved in subdirectories corresponding to their categories, which helps to automatically label the data when it is loaded.

2.2 E-Waste Categories

The dataset contains images from 10 classes of e-waste that are common categories of electronic waste one could find at any recycling or dumping site. These include: Battery, Keyboard, Microwave, Mobile, Mouse, PCB (Printed Circuit Board), Player, Printer, Television, and Washing Machine. The dataset includes both small and large electronic devices, hence it provides variety for training the model. This diversity helps the model learn to recognize different types of e-waste often seen in recycling processes.

2.3 Data preprocessing techniques

The dataset is resized to 180 × 180 pixels and batched with 32 images for efficiency. Shuffling is performed on the training and validation sets to reduce bias. Normalization of pixel values is performed from [0, 255] to [0, 1] using Rescaling(1./255). Images are arranged in subfolders by class label. Preprocessing steps like these help improve the accuracy of a model and generalization. The data augmentation techniques are applied during training to make the model more generalized and less prone to overfitting: random flipping (horizontal and vertical), random rotation within ±20°, random zooming, random contrast adjustment, and random translation (horizontal/vertical shifts). This will introduce variability into the dataset so that your model can learn invariant features and recognize objects at different orientations, scales, and lighting conditions without extra data collection.

2.4 CNN algorithm

CNN is another deep learning algorithm; rather, it is more suitable for image recognition and processing. This model has several layers in the format of convolutional, pooling, and fully connected layers as shown in Figure 1. Its architecture is a mimic of how the human brain processes images. It is an apt model to capture hierarchical patterns as well as spatial dependencies in images. Convolutional neural networks are the most powerful versions of artificial neural networks, and are highly apt for jobs of image recognition and processing. CNNs have been experimentally proven very effective in every type of application from image classification and object detection, image segmentation to even generation from images.

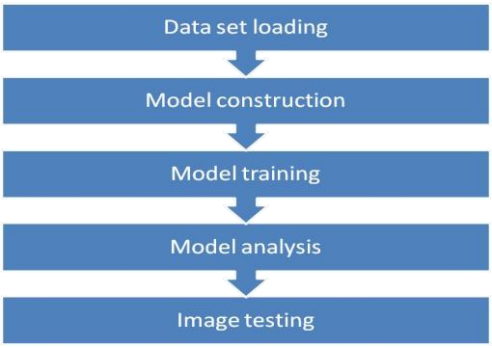

Figure 1. Convolution Neural Network Model

2.5 CNN Model

The CNN takes input images resized to 180 × 180 pixels. It consists of convolutional layers with 16, 32, and 64 filters, each followed by ReLU activation, along with max pooling layers to reduce

spatial dimensions. After flattening the output from convolutional layers, there is a dense, fully connected layer with 128 units and a dropout at a rate of 0.2 to prevent overfitting; it has the final layer, with 10 units—each representing e-waste categories—attached with softmax activation to produce class probabilities. The model is trained with the Adam optimizer, which provides efficient training, and sparse categorical cross-entropy as the loss function for multiclass classification. It is trained with a batch size of 32 images for 10 epochs. ReLU activation in the hidden layers and softmax in the output layer are used in classifying the images into the 10 classes of e-waste. All these design choices ensure effective classification performance. Block diagram of proposed system is shown in Figure 2.

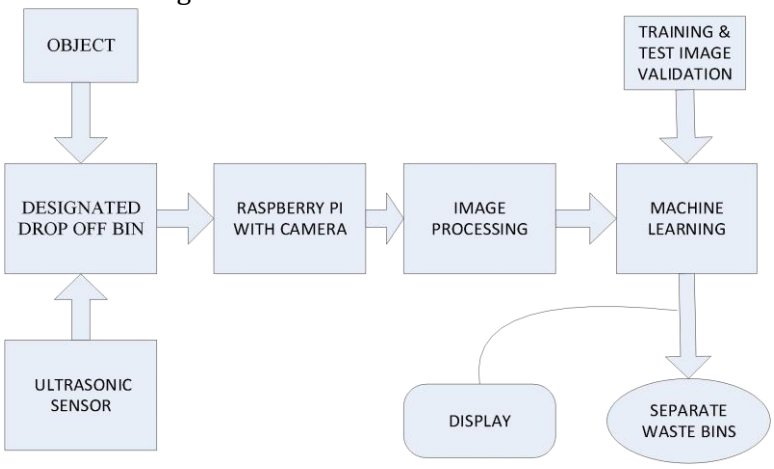

Figure 2. Block diagram of Proposed System

2.6 Raspberry Pi-4

The Raspberry Pi 4 is a Cost-effective single-board computer as shown in Figure 3. The Raspberry Pi 4 serves as the CPU for an automated e-waste management system, where machine learning models are run for classification and sorting. It processes data from ultrasonic sensors and cameras to identify e-waste types and controls actuators like servo motors for sorting. It features a Broadcom BCM2711 Cortex-A72 quad-core processor, supporting up to 8GB LPDDR4 RAM and microSD storage. Featuring Gigabit Ethernet, dual-band Wi-Fi, Bluetooth 5.0, and 40 GPIO pins, it allows for flawless integration with external components. With its power provided through a 5V USB-C supply, Raspberry Pi 4 makes the management of e-waste more efficient and sustainable.

2.7 Servo Motor

Servo motors help move robotic arms and sorting gates to separate e-waste. A servo motor controller connects with the Raspberry Pi, sending signals to control movement. The Raspberry Pi uses GPIO pins to send sorting commands based on machine learning. These motors have 1.5–30 kg· cm torque, 0.15–0.2 sec/60° speed, and need 4.8V–6V power. They can turn 0°–180°, making e-waste sorting more accurate and efficient.

2.8 Ultra Sonic Sensor & Camera

An ultrasonic sensor detects the presence of an object in the bin and sends a signal to the Raspberry Pi. In case an object is detected, the camera turns on, and thus, the image processing system gets triggered. Finally, a pre-trained CNN model classifies it as e-waste or non-e-waste.

Based on this classification, the Raspberry Pi controls a servo motor that separates and sorts the waste into designated bins in order to maintain an automated and efficient sorting process. The ultrasonic sensor works at 5V DC with a 2–400 cm detection range and ±1 cm accuracy, which is quite suitable for precise waste detection and sorting.

Figure 3. Raspberry pi 4 board

2.9 Prototype

A picture of the prototype in operation is shown in Figure 4 seeing the system in operation as it separates e-waste from non-e-waste. The picture shows the automated separation process , as well as the bins for waste materials.

Figure 4. Prototype showing the segregation of e-waste and non e-waste

3. Proposed Solution

3.1 Sorting Mechanism

This system automatically sorts e-waste using a machine learning model. The system is built with a Raspberry Pi for processing, an ultrasonic sensor for object detection, a servo motor for control of the sorting mechanism, and two bins for waste separation. When an object is placed on the

platform, the ultrasonic sensor detects the object, and a camera takes a picture. The Raspberry Pi hosts a trained machine learning model that classifies the waste into recyclable or non-recyclable. Based on this classification, the servo motor moves the waste into the respective bin for efficient and automated e-waste management. Figure 5 shows the Schematic diagram of an automated e-waste sorting system .

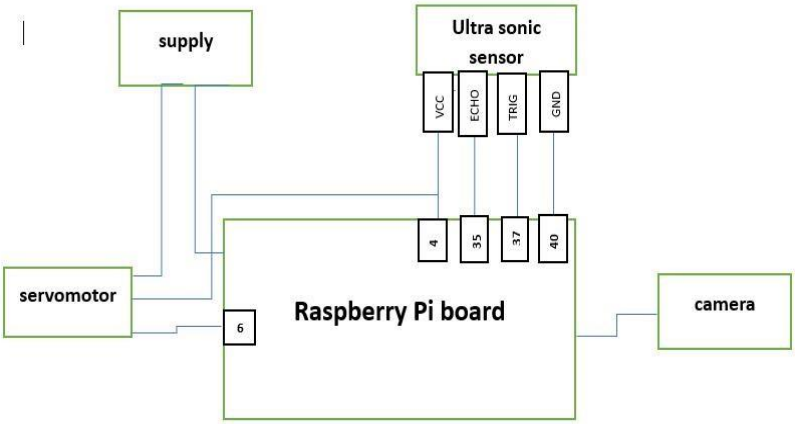

Figure 5. Schematic diagram of an automated e-waste sorting system

3.2 Data Management

Data management of the e-waste disposal system is done locally using Raspberry Pi OS installed on a Raspberry Pi with memory cards as the main storage medium. The Raspberry Pi will act as the central processing unit for performing tasks like data collection and model inference. The memory card will store the operating system along with the processed data, hence enabling efficient local management of data. This setup eliminates the need for cloud storage, making the system autonomous. The Raspberry Pi does all data processing and storage directly, which keeps the entire system self-contained and independent of any external resources.

4. Results and Discussion

4.1 Training Accuracy

The performance of the CNN model was evaluated on both the training and validation datasets. The metrics used to measure performance were accuracy and loss. The model could achieve a training accuracy of 95%, which indicates it did manage to recognize and classify most of the images of e-waste correctly during training.

4.2 Validation Accuracy

It reached a validation accuracy of 93% on the validation set. This was an indication that the model had generalized well and could apply the learned features to unseen data since there was a negligible difference between the training and validation results. Figure 6 illustrates the curves of training and validation accuracy.

4.3 Training Loss

The training loss continued to decrease, which means the model keeps improving on minimizing errors and enhancing its prediction accuracy. Training and Validation loss curves is shown in Figure 7.

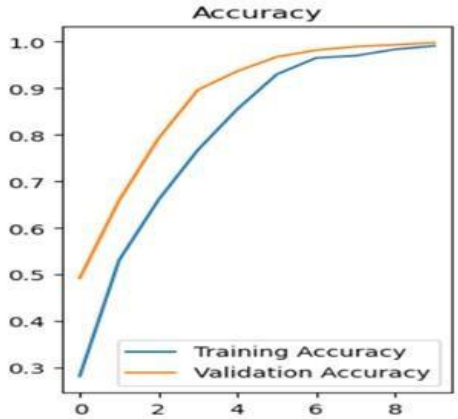

Figure 6. Accuracy Curves of Training and Validation

4.4 Validation Loss

The validation loss also follows a downward trend. This is an indication that the model was able to generalize well to new, unseen data and that it kept improving its predictions throughout the training process.

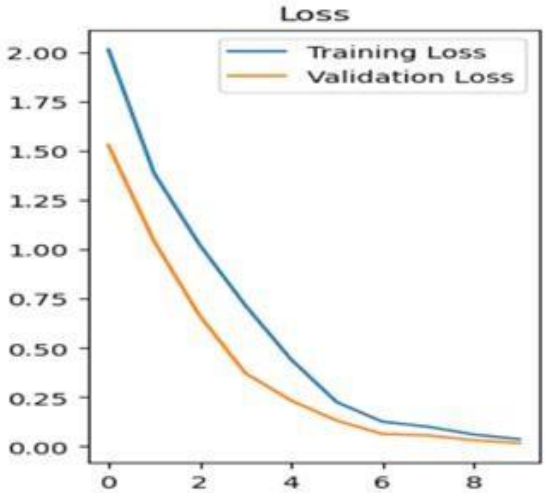

Figure 7. Training and Validation Loss Curves

4.5 Confusion Matrix

The confusion Matrix is shown in Figure 8. The confusion matrix is used to evaluate the performance of the e-waste classification model by comparing actual and predicted labels over ten categories. It highlights true positives (TP), false positives (FP), false negatives (FN), and true negatives (TN), thus showing the accuracy of classification. A cumulative confusion matrix revealed 171 TP, 129 FP, 129 FN, and 2331 TN, demonstrating high overall accuracy.

4.6 Prototype Performance

The prototype achieved 93% sorting accuracy in recognizing and separating e-waste. It took 2 to 3 seconds per item for processing, including detection, classification, and sorting. Challenges faced during testing included lighting changes, object position, and sensor precision, which sometimes affected the results. It also had a very minor effect on the system's performance due to hardware limitations such as camera quality and processing speed. Nevertheless, the system worked correctly and sorted e-waste with very few mistakes.

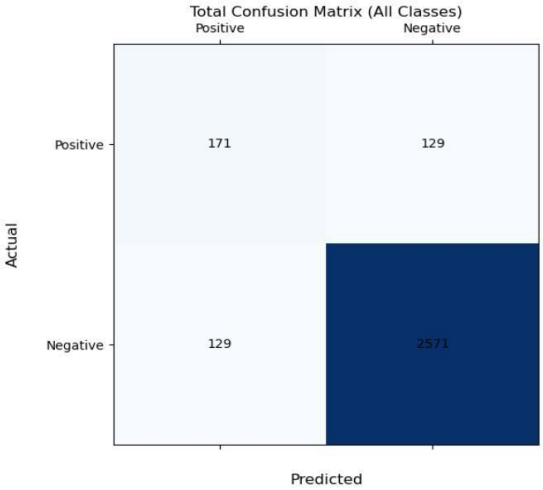

Figure 8. Confusion Matrix of E-waste Categories

4.7 Scalability

The automated e-waste sorting system can be scaled up for larger applications by increasing its processing power, adopting better machine-learning models, and upgrading hardware. With high-resolution cameras and faster processors, better accuracy and higher speed can be achieved. The addition of a conveyor belt can sort waste in a continuous manner. The data can be stored on the cloud, while real-time monitoring is used to track performance and make improvements. Training the model on more data can help it recognize more types of e-waste. These upgrades will make the system useful for large recycling centers and industrial waste management.

5. Conclusion

In conclusion, an image database of ten different categories of e-waste was created, and a machine learning-based CNN model was developed for efficient classification of such images. The developed functional prototype had proved that the system is able to recognize and sort ewaste based on its classification. The model was trained over 2400 images and validated with 300 images, resulting in a high training accuracy of 95% and validation accuracy of 93%. The system also includes an e-waste drop-off bin equipped with ultrasonic sensors that can detect objects entering the e-waste box. When the sensors sense an object, a photo of the item is taken and then processed by the pre-trained machine-learning model running on a Raspberry Pi. Based on this classification, the servo motor is actuated by a signal from the Raspberry Pi, and the sorting mechanism is operated; then, the useful e-waste is dropped into the specific bin for recycling, while the non-useful ones are dropped outside. It also displays the type of e-waste for user awareness. This work shows the potential of the combination of machine learning with

automation for better management of e-waste. The integration of sensors, image processing, and machine learning brings an effective solution for e-waste sorting and recycling; hence, it could scale up to meet the increasing problem of e-waste and provide support for sustainable recycling practices.

6. Future Work

Future improvements include integrating a conveyor belt system for better efficiency in sorting and automating continuous waste processing. Expanding the image database with more diverse classes of e-waste would increase model accuracy and robustness. Additionally, scaling up the prototype for industrial deployment would enable large-scale e-waste sorting and recycling in support of sustainable waste management practices.

References

[1] Ali, L., Sivaramakrishnan, K., Kuttiyathil, M. S., Chandrasekaran, V., Ahmed, O. H., Al-Harahsheh, M., & Altarawneh, M. (2023). Prediction of thermogravimetric data in bromine captured from brominated flame retardants (BFRs) in e-waste treatment using machine learning approaches. Journal of Chemical Information and Modeling, 63(8), 2305-2320.

[2] Ramya, P., & Ramya, V. (2023). E-waste management using hybrid optimization-enabled deep learning in IoTcloud platform. Advances in Engineering Software, 176, 103353.

[3] Ramya, P., Ramya, V., & Babu Rao, M. (2023). Optimized deep learning-based e-waste management in IoT application via energy-aware routing. Cybernetics and Systems, 1-30.

[4] Selvakanmani, S., Rajeswari, P., Krishna, B. V., & Manikandan, J. (2024). Optimizing E-waste management: Deep learning classifiers for effective planning. Journal of Cleaner Production, 443, 141021.

[5] Raghavendra, T. S., Nagaraja, S. R., & Mohan, K. G. (2023). Convergence of real-time analytical framework with ewaste disposal using machine learning-centered hybrid neural networks. Journal of The Institution of Engineers (India): Series C, 1-11.

[6] Khatiwada, B., Jariyaboon, R., & Techato, K. (2023). E-waste management in Nepal: A case study overcoming challenges and opportunities. e-Prime-Advances in Electrical Engineering, Electronics and Energy, 4, 100155.

[7] Voskergian, D., & Ishaq, I. (2023). Smart e-waste management system utilizing Internet of Things and Deep Learning approaches. Journal of Smart Cities and Society, (Preprint), 1-22.

[8] Li, H., Jin, Z., & Krishnamoorthy, S. (2021, May). E-waste management using machine learning. In Proceedings of the 6th International Conference on Big Data and Computing (pp..30-35).

[9] Selvakanmani, S., Rajeswari, P., Krishna, B. V., & Manikandan, J. (2024). Optimizing E-waste management: Deep learning classifiers for effective planning. Journal of Cleaner Production, 443, 141021.

[10] Ali, Z., Jamil, Y., Anwar, H., & Sarfraz, R. A. (2024). Classification of e-waste using machine learning-assisted laserinduced breakdown spectroscopy. Waste Management & Research, 0734242X241248730.

[11] Sharma, A., Swami, N. K., Mittal, R., & Hiran, K. K. (2024, March). Smart Trash Management: IoT and Machine Learning Solutions for Effective E-Waste Management. In 2024 International Conference on Trends in Quantum Computing and Emerging Business Technologies (pp. 1-6). IEEE.

[12] Oise, G., & Konyeha, S. (2024). E-Waste Management Through Deep Learning: A Sequential Neural Network Approach. Fudma Journal Of Sciences, 8(4), 17-24.

[13] Yang, L., Zhang, T., Gao, Y., Li, D., Cui, R., Gu, C & Sun, H. (2024). Quantitative identification of the co-exposure effects of e-waste pollutants on human oxidative stress by explainable machine learning. Journal of Hazardous Materials, 466, 133560.

[14] Debnath, B., Chattopadhyay, A. K., & Kumar, T. K. (2024). An economic optimization model of an e-Waste supply chain network: Machine learned kinetic modelling for sustainable production. Sustainability, 16(15), 6491.

[15] Ueda, T., Koyanaka, S., & Oki, T. (2024). In-line sorting system with battery detection capabilities in e-waste using combination of X-ray transmission scanning and deep learning. Resources, Conservation and Recycling, 201, 107345.