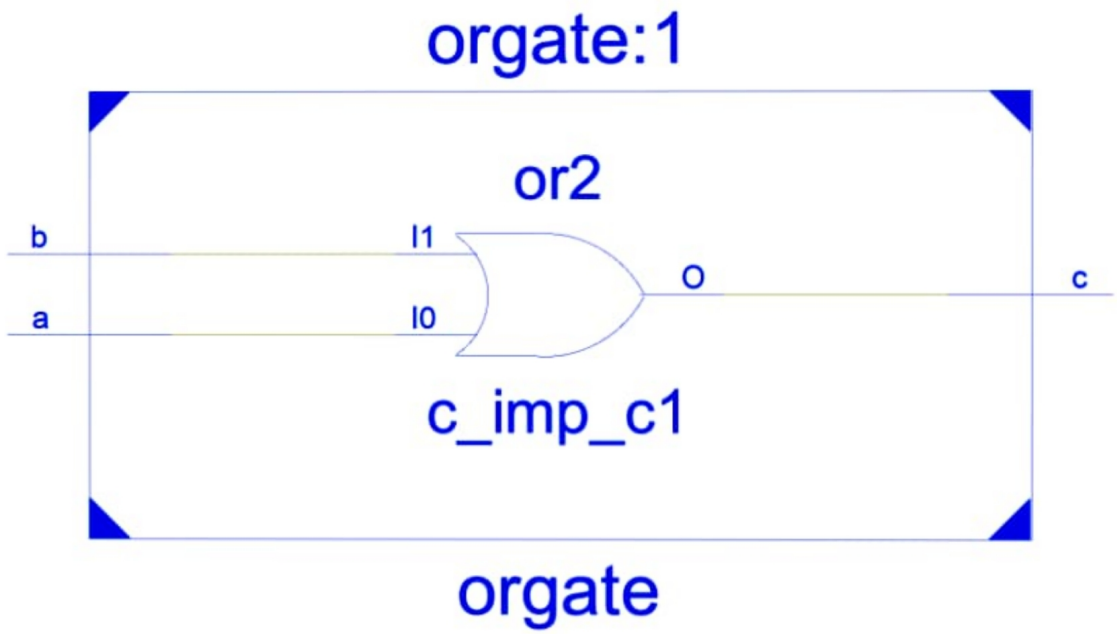
orgate:1
or2
b
a
I1
I0
O
c
c_imp_c1
orgate

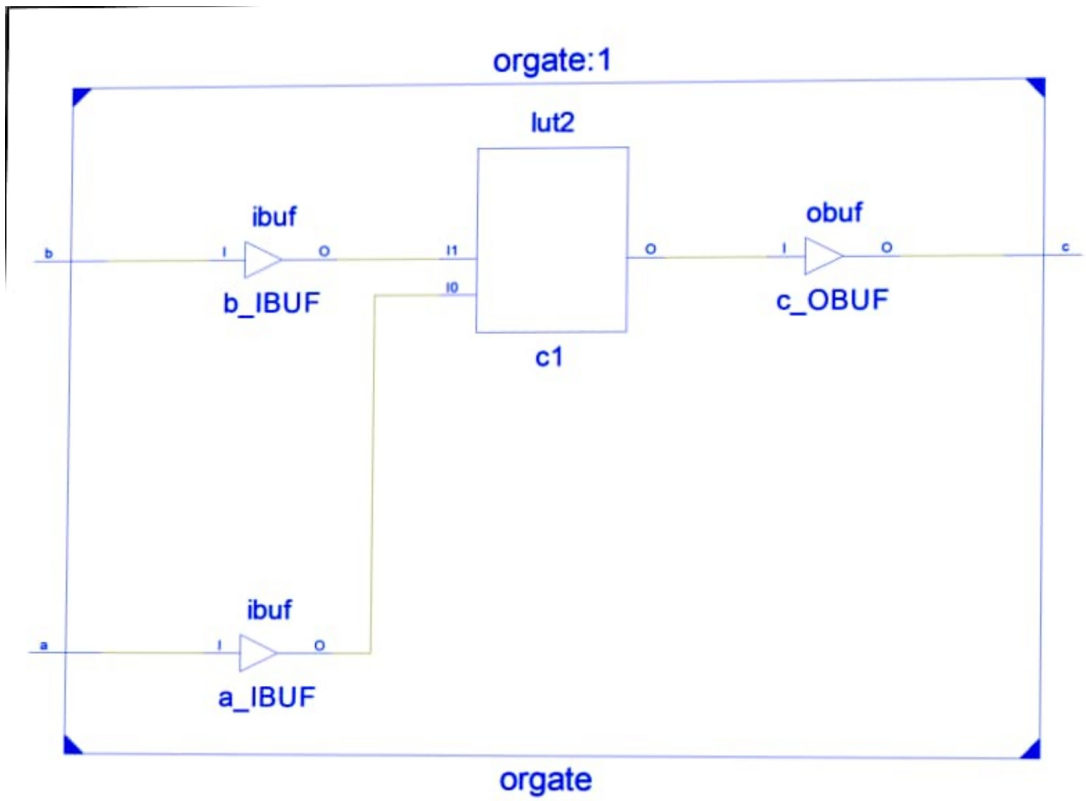
orgate:1
lut2
ibuf
b
I
O
I1
I0
b_IBUF
O
obuf
I
O
c
c_OBUF
c1
ibuf
a
I
O
a_IBUF
orgate

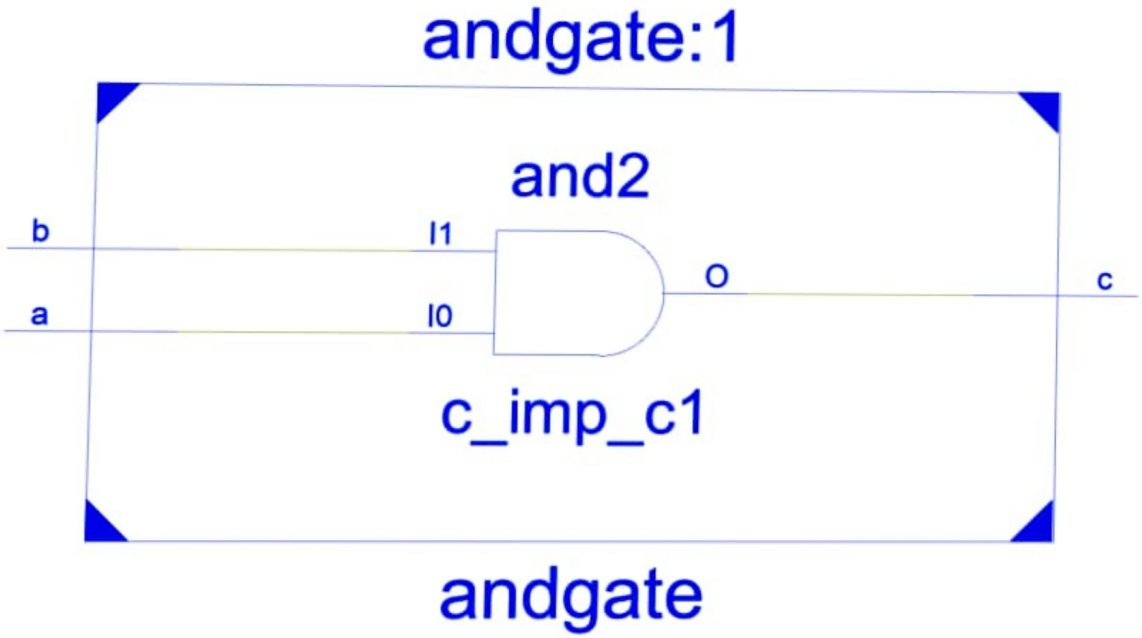
andgate:1
and2
b
I1
O
c
a
I0
c_imp_c1
andgate

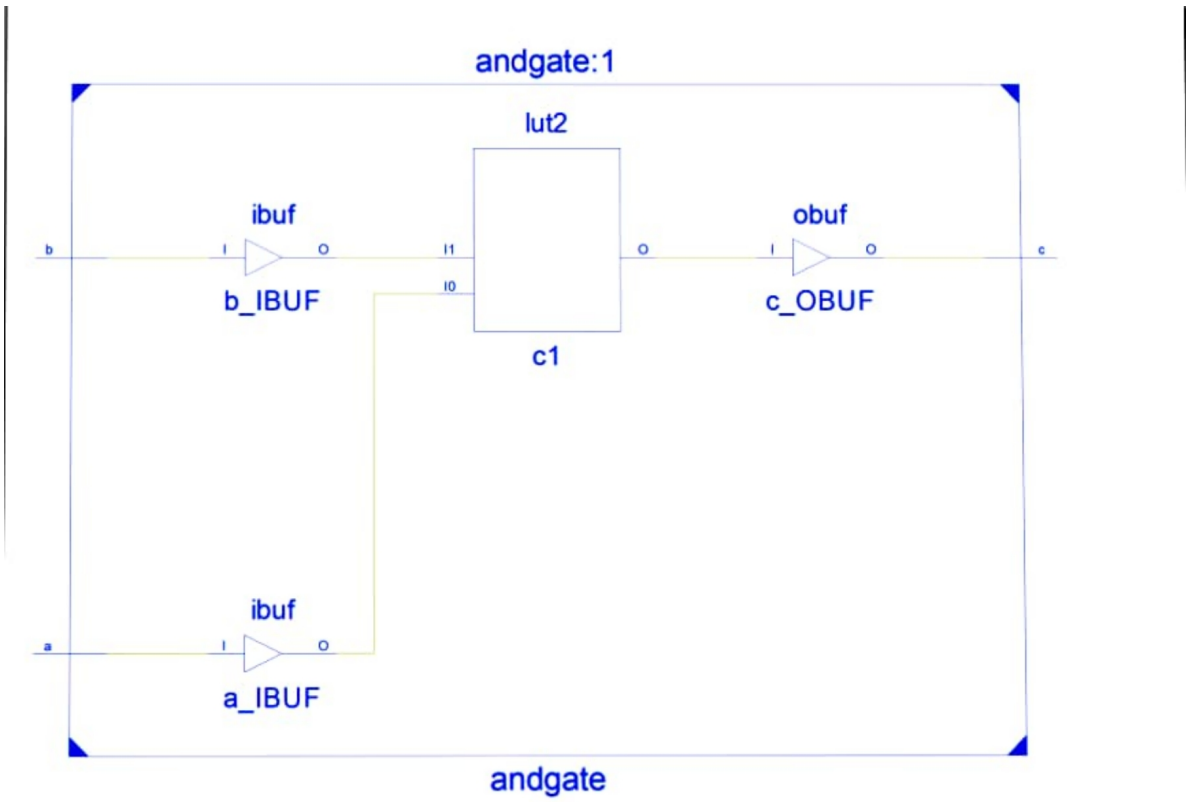
andgate:1
lut2
ibuf
obuf
b
I
O
I1
O
I
O
c
I0
b_IBUF
c_OBUF
c1
ibuf
a
I
O
a_IBUF
andgate

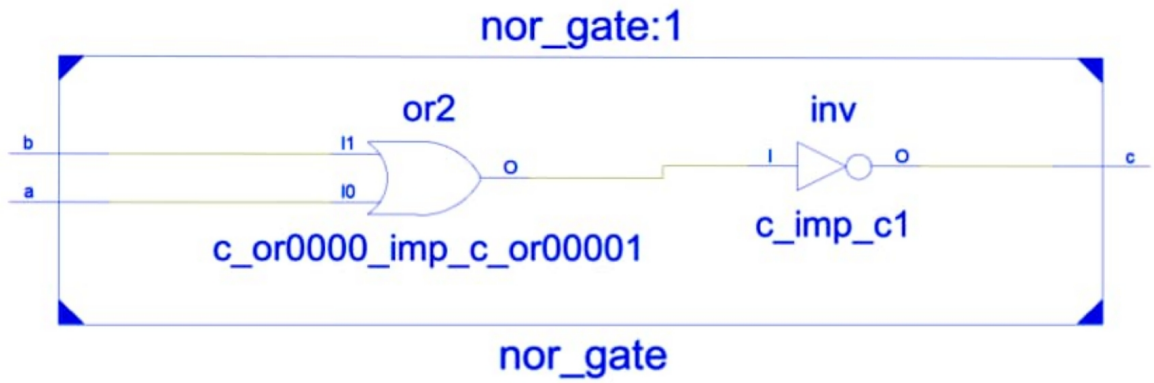
nor_gate:1
or2
inv
b
a
I1
I0
O
I
O
c
c_or0000_imp_c_or00001
c_imp_c1
nor_gate

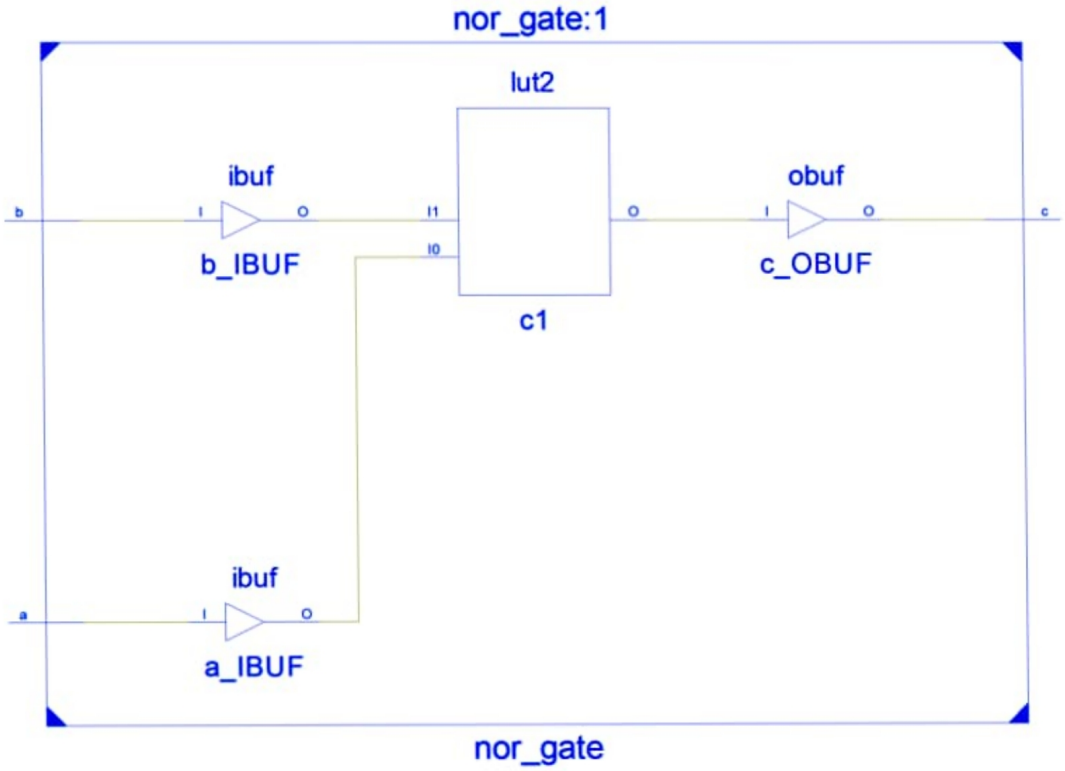
nor_gate:1
lut2
ibuf
obuf
b
I
O
I1
I0
O
I
O
c
b_IBUF
c_OBUF
c1
ibuf
a
I
O
a_IBUF
nor_gate

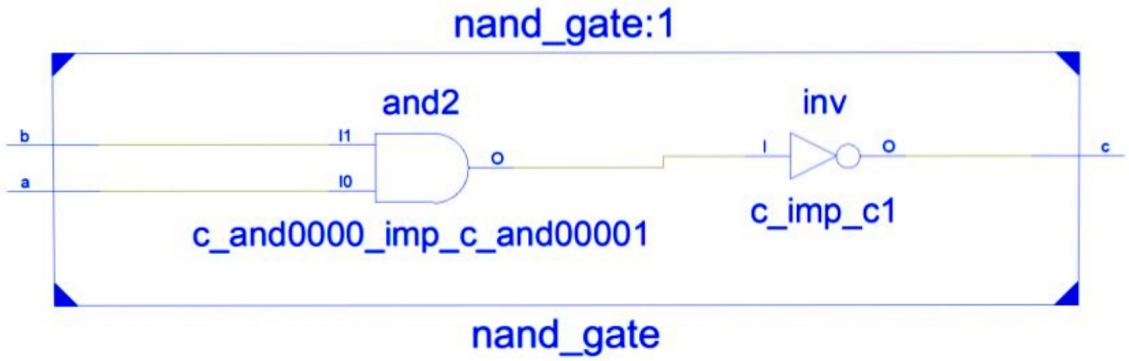
nand_gate:1
and2
inv
b
a
I1
I0
O
I
O
c
c_and0000_imp_c_and00001
c_imp_c1
nand_gate

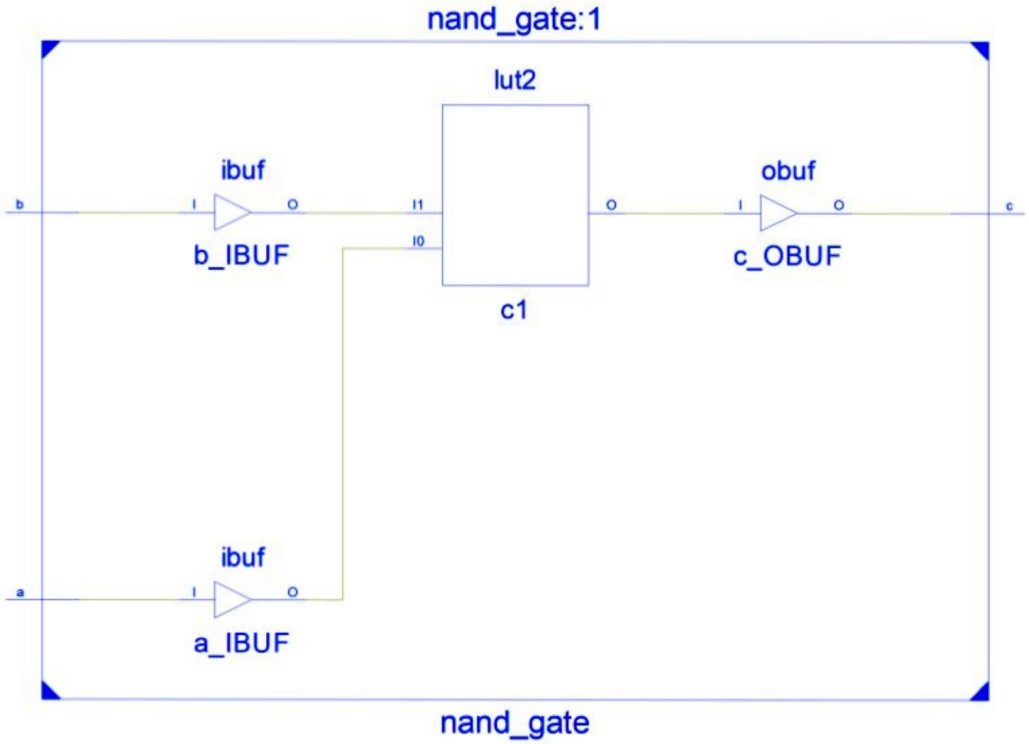
nand_gate:1
lut2
ibuf
obuf
b
I
O
I1
I0
O
I
O
c
b_IBUF
c_OBUF
c1
ibuf
a
I
O
a_IBUF
nand_gate

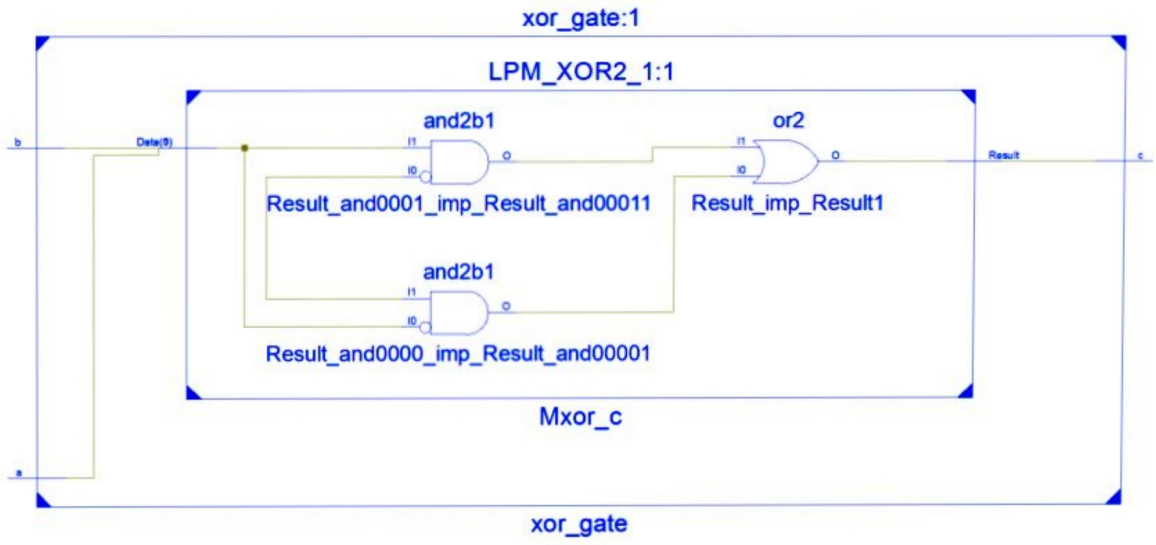
xor_gate:1
LPM_XOR2_1:1
and2b1
or2
b
Data(0)
I1
I0
O
Result
c
Result_and0001_imp_Result_and00011
Result_imp_Result1
and2b1
Result_and0000_imp_Result_and00001
Mxor_c
a
xor_gate

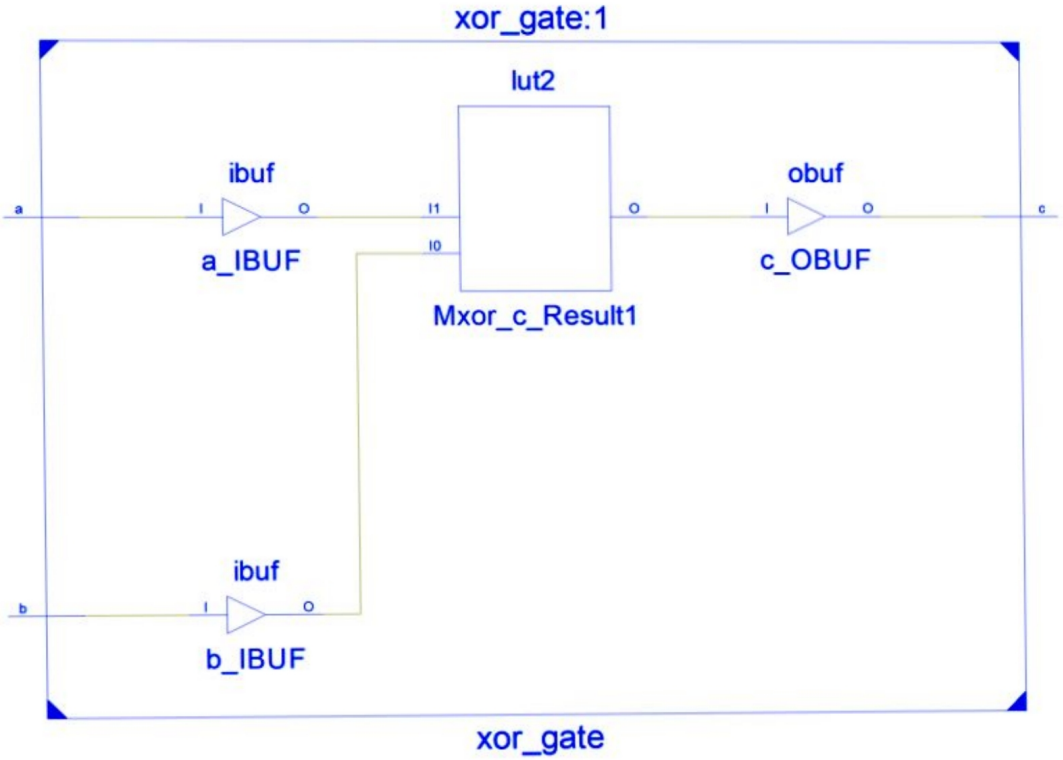
xor_gate:1
lut2
ibuf
obuf
a
I
O
I1
I0
c
a_IBUF
Mxor_c_Result1
c_OBUF
ibuf
b
b_IBUF
xor_gate

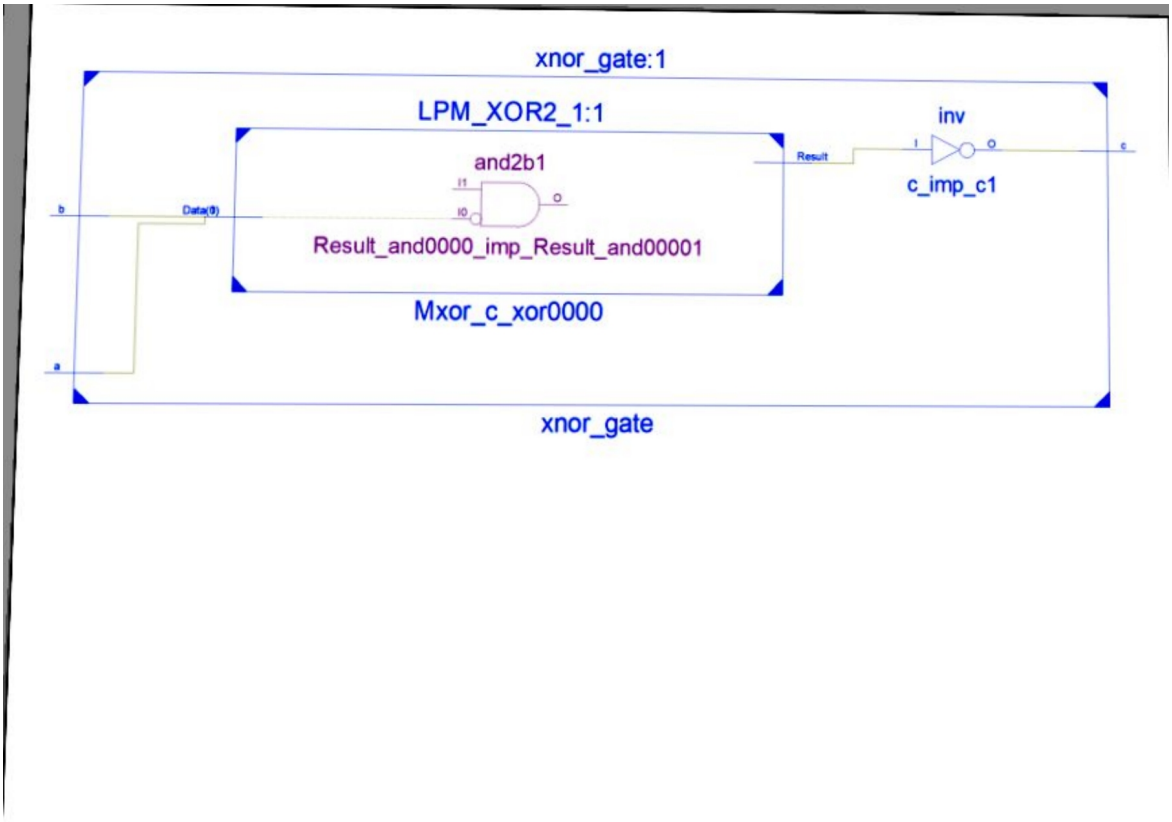
xnor_gate:1
LPM_XOR2_1:1
and2b1
I1
I0
O
Result_and0000_imp_Result_and00001
Mxor_c_xor0000
Result
inv
I
O
c_imp_c1
b
Data(0)
a
c
xnor_gate

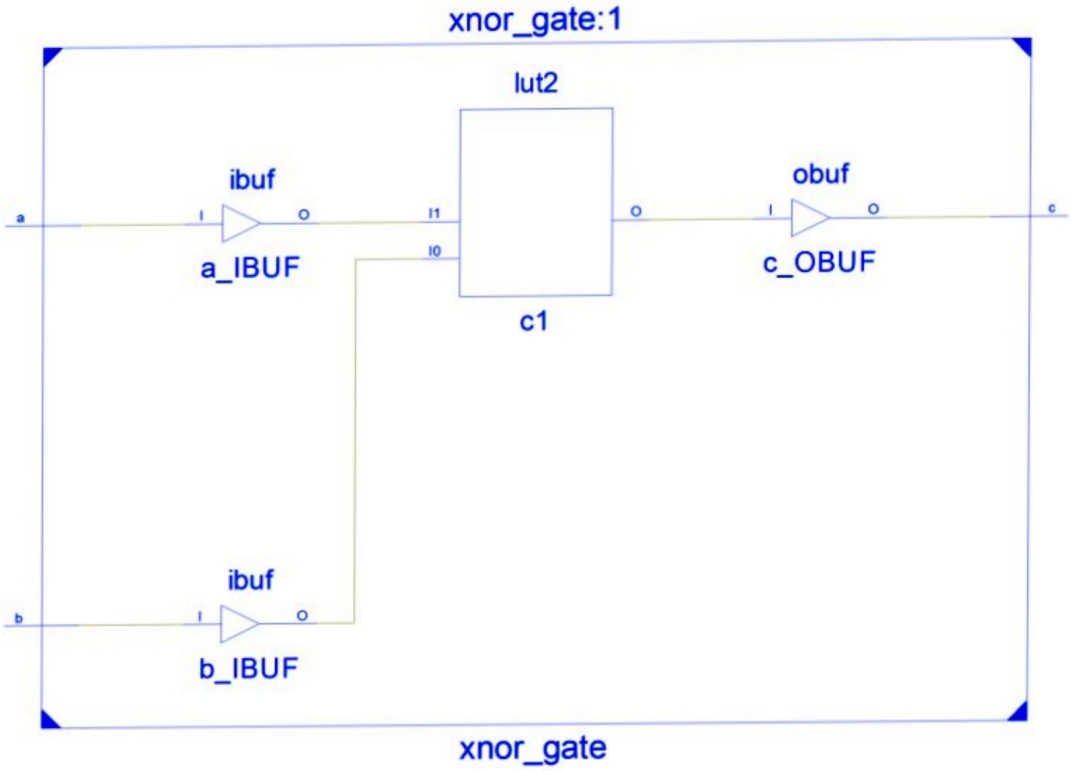
xnor_gate:1
lut2
ibuf
I
O
a_IBUF
I1
I0
O
c1
obuf
I
O
c_OBUF
a
c
ibuf
I
O
b_IBUF
b
xnor_gate

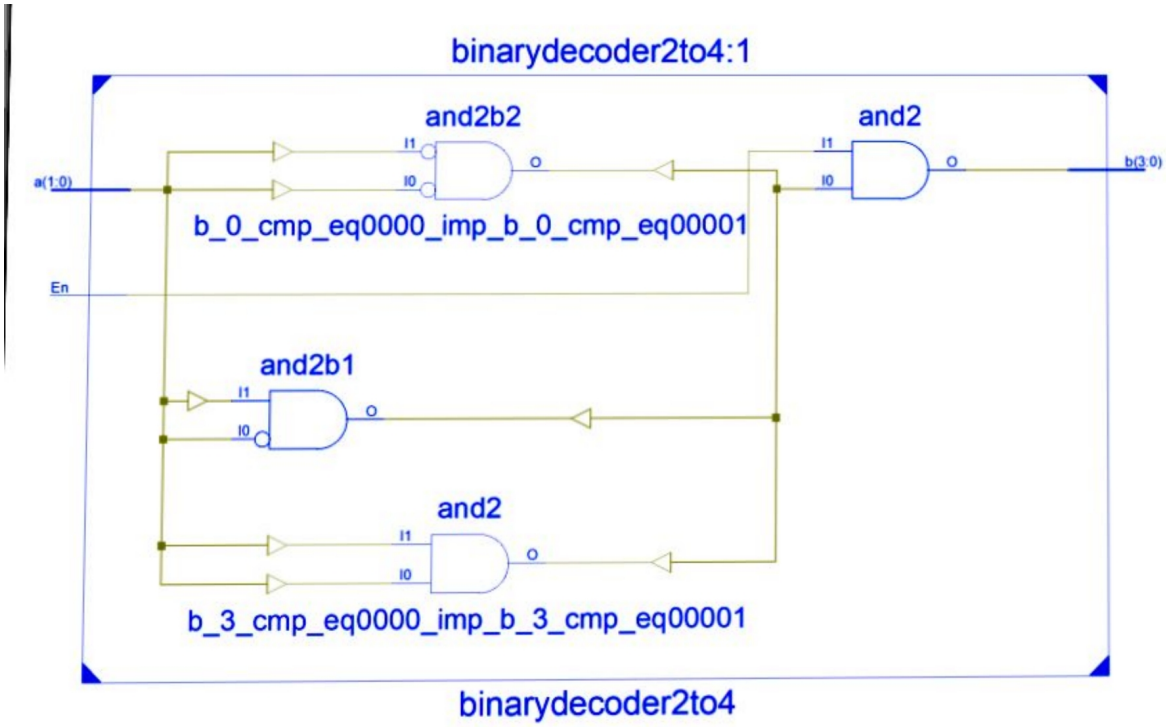
binarydecoder2to4:1
and2b2
and2
a(1:0)
b(3:0)
I1
I0
O
b_0_cmp_eq0000_imp_b_0_cmp_eq00001
En
and2b1
and2
b_3_cmp_eq0000_imp_b_3_cmp_eq00001
binarydecoder2to4

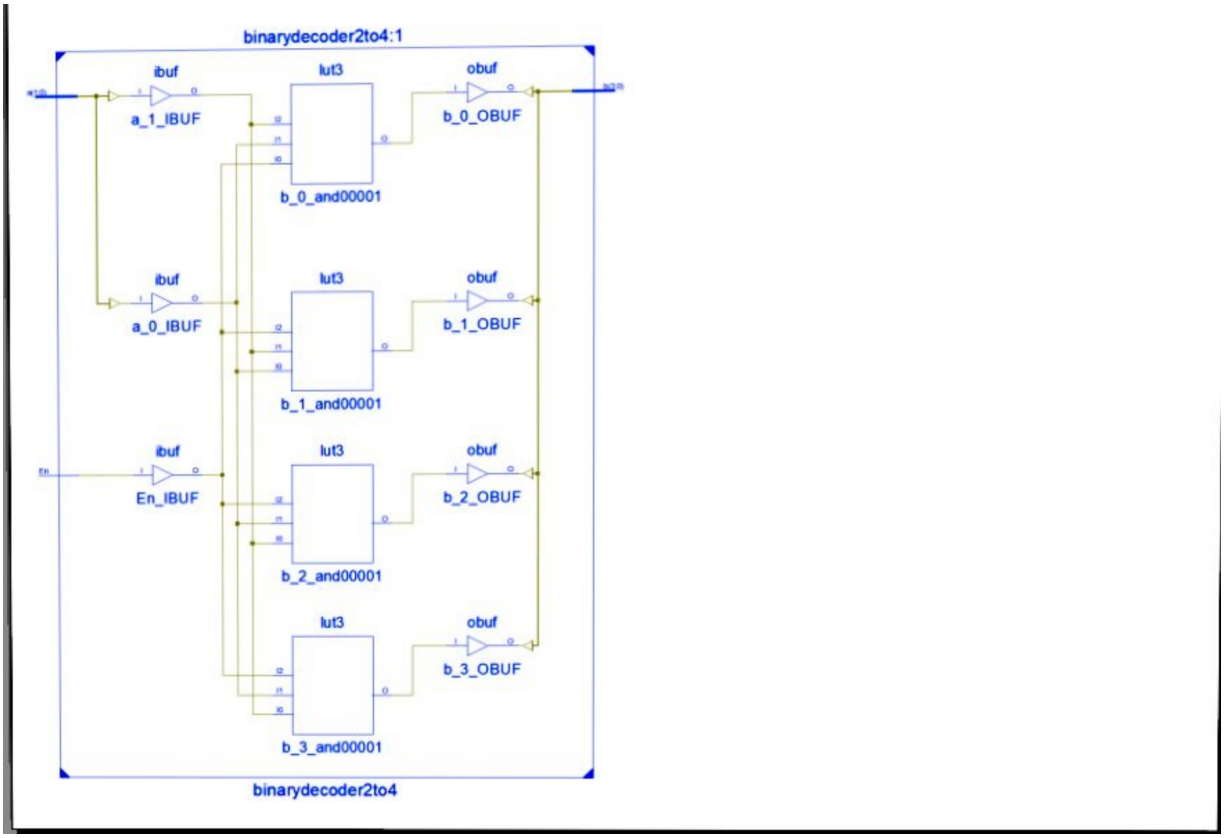
binarydecoder2to4:1
ibuf
lut3
obuf
a_1_IBUF
b_0_OBUF
b_0_and00001
a_0_IBUF
b_1_OBUF
b_1_and00001
En_IBUF
b_2_OBUF
b_2_and00001
b_3_OBUF
b_3_and00001
binarydecoder2to4

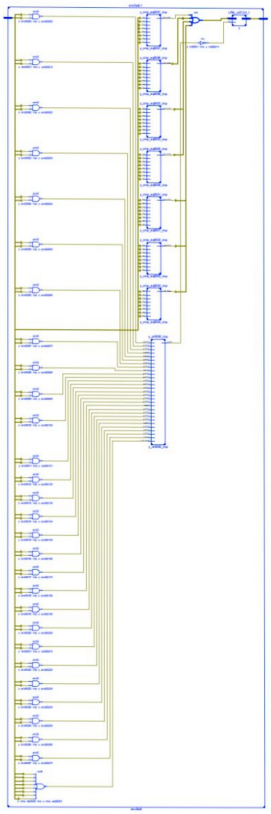

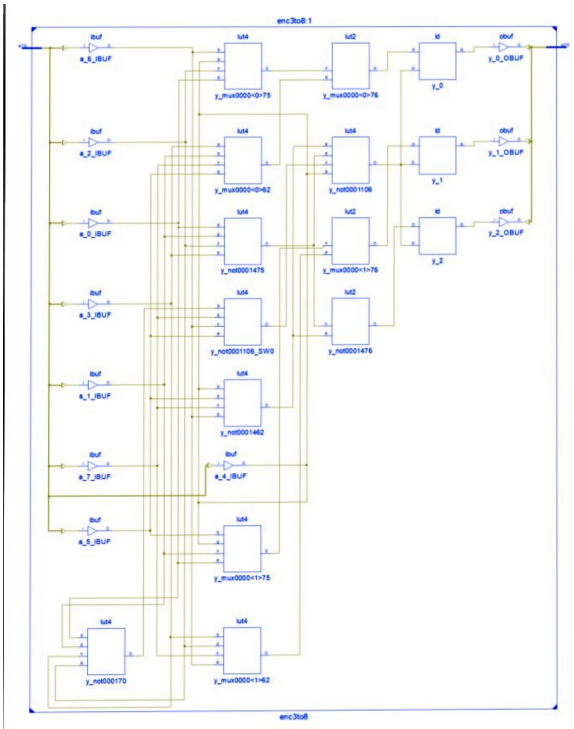
enc3to8:1
ibuf
a_6_IBUF
ibuf
a_2_IBUF
ibuf
a_0_IBUF
ibuf
a_3_IBUF
ibuf
a_1_IBUF
ibuf
a_7_IBUF
ibuf
a_5_IBUF
lut4
y_mux0000<0>75
lut4
y_mux0000<0>62
lut4
y_not0001475
lut4
y_not0001106_SW0
lut4
y_not0001462
lut4
y_mux0000<1>75
lut4
y_not000170
lut4
y_mux0000<1>62
lut2
y_mux0000<0>76
lut4
y_not0001106
lut2
y_mux0000<1>76
lut2
y_not0001476
ibuf
a_4_IBUF
ld
y_0
ld
y_1
ld
y_2
obuf
y_0_OBUF
obuf
y_1_OBUF
obuf
y_2_OBUF
enc3to8

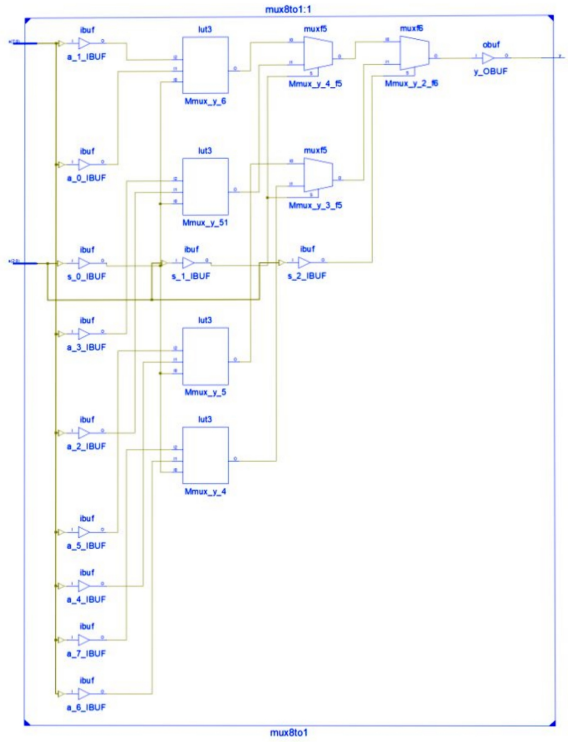
mux8to1:1
ibuf
a_1_IBUF
lut3
Mmux_y_6
muxf5
Mmux_y_4_f5
muxf6
Mmux_y_2_f6
obuf
y_OBUF
ibuf
a_0_IBUF
lut3
Mmux_y_51
muxf5
Mmux_y_3_f5
ibuf
s_0_IBUF
ibuf
s_1_IBUF
ibuf
s_2_IBUF
ibuf
a_3_IBUF
lut3
Mmux_y_5
ibuf
a_2_IBUF
lut3
Mmux_y_4
ibuf
a_5_IBUF
ibuf
a_4_IBUF
ibuf
a_7_IBUF
ibuf
a_6_IBUF
mux8to1

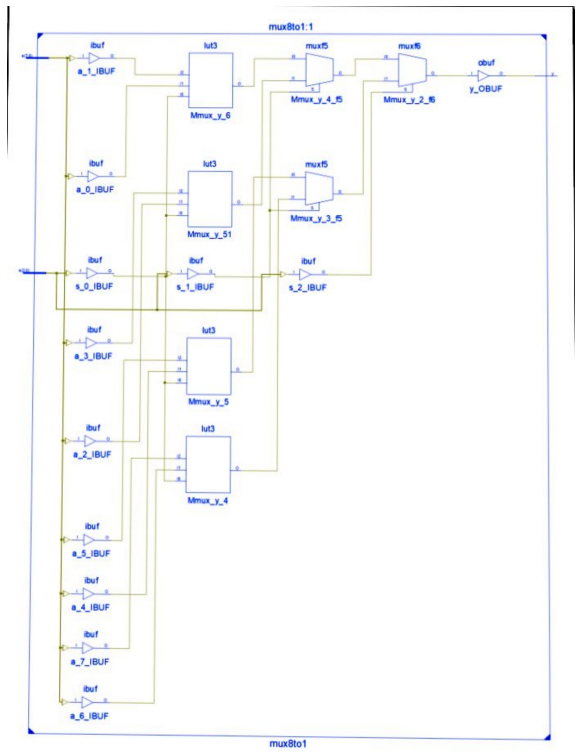
mux8to1:1
ibuf
a_1_IBUF
lut3
Mmux_y_6
muxf5
Mmux_y_4_f5
muxf6
Mmux_y_2_f6
obuf
y_OBUF
ibuf
a_0_IBUF
lut3
Mmux_y_51
muxf5
Mmux_y_3_f5
ibuf
s_0_IBUF
ibuf
s_1_IBUF
ibuf
s_2_IBUF
ibuf
a_3_IBUF
lut3
Mmux_y_5
ibuf
a_2_IBUF
lut3
Mmux_y_4
ibuf
a_5_IBUF
ibuf
a_4_IBUF
ibuf
a_7_IBUF
ibuf
a_6_IBUF
mux8to1

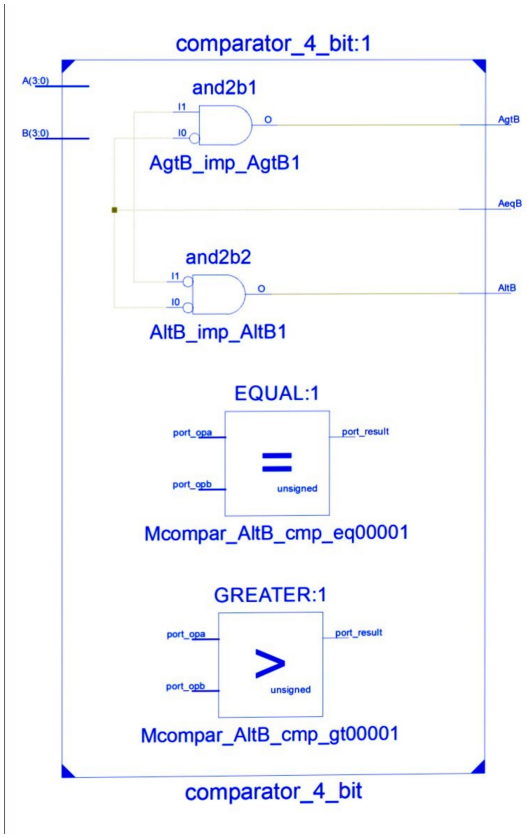
comparator_4_bit:1
A(3:0)
B(3:0)
and2b1
I1
I0
O
AgtB_imp_AgtB1
AgtB
AeqB
and2b2
I1
I0
O
AltB_imp_AltB1
AltB
EQUAL:1
port_opa
port_opb
port_result
=
unsigned
Mcompar_AltB_cmp_eq00001
GREATER:1
port_opa
port_opb
port_result
>
unsigned
Mcompar_AltB_cmp_gt00001
comparator_4_bit

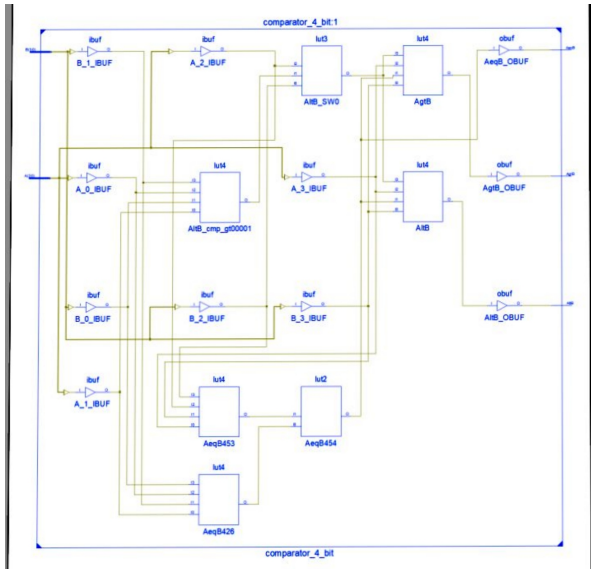
comparator_4_bit:1
ibuf
B_1_IBUF
ibuf
A_2_IBUF
lut3
AltB_SW0
lut4
AgtB
obuf
AeqB_OBUF
ibuf
A_0_IBUF
lut4
AltB_cmp_gt00001
ibuf
A_3_IBUF
lut4
AltB
obuf
AgtB_OBUF
ibuf
B_0_IBUF
ibuf
B_2_IBUF
ibuf
B_3_IBUF
obuf
AltB_OBUF
ibuf
A_1_IBUF
lut4
AeqB453
lut2
AeqB454
lut4
AeqB426
comparator_4_bit

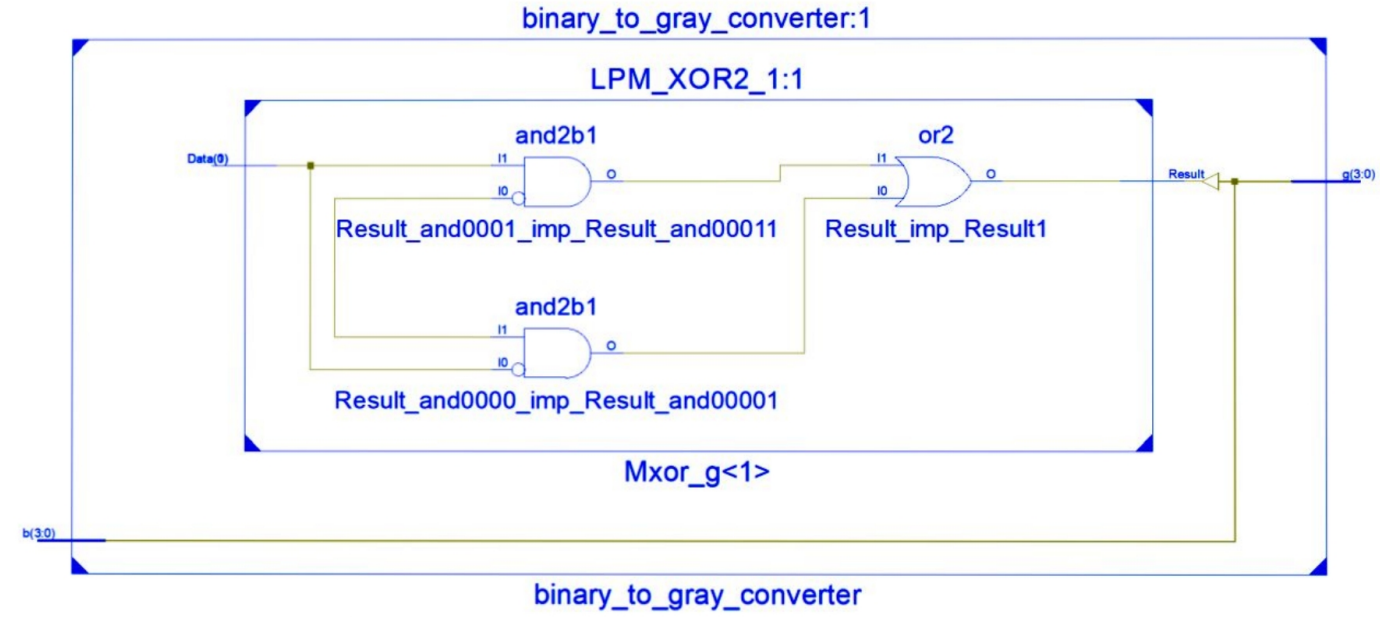
binary_to_gray_converter:1
LPM_XOR2_1:1
and2b1
or2
Data(0)
I1
I0
O
Result
g(3:0)
Result_and0001_imp_Result_and00011
Result_imp_Result1
and2b1
Result_and0000_imp_Result_and00001
Mxor_g<1>
b(3:0)
binary_to_gray_converter

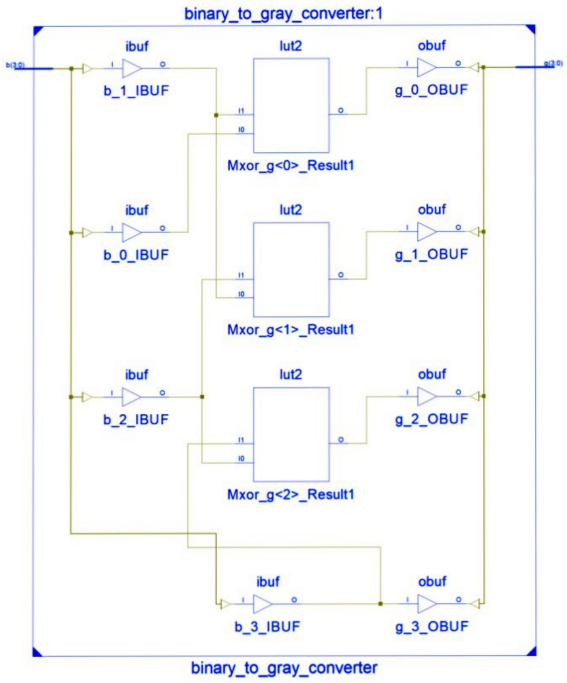
binary_to_gray_converter:1
ibuf
lut2
obuf
b(3:0)
g(3:0)
b_1_IBUF
g_0_OBUF
Mxor_g<0>_Result1
b_0_IBUF
g_1_OBUF
Mxor_g<1>_Result1
b_2_IBUF
g_2_OBUF
Mxor_g<2>_Result1
b_3_IBUF
g_3_OBUF
binary_to_gray_converter

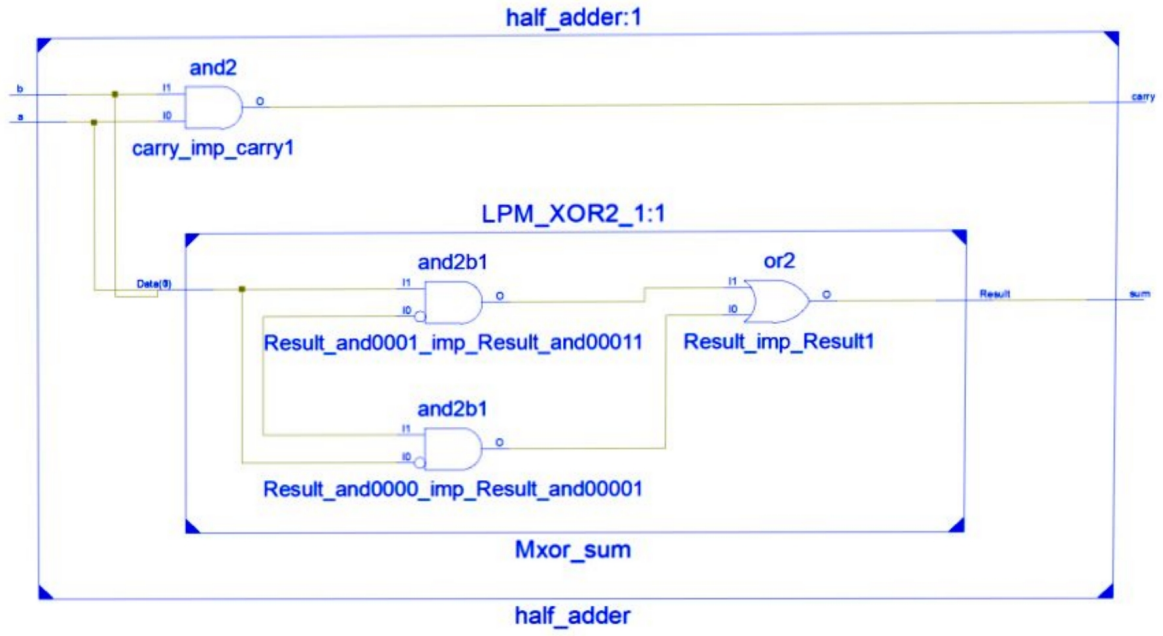
half_adder:1
and2
b
a
I1
I0
O
carry
carry_imp_carry1
LPM_XOR2_1:1
and2b1
or2
Data(9)
Result
sum
Result_and0001_imp_Result_and00011
Result_imp_Result1
and2b1
Result_and0000_imp_Result_and00001
Mxor_sum
half_adder

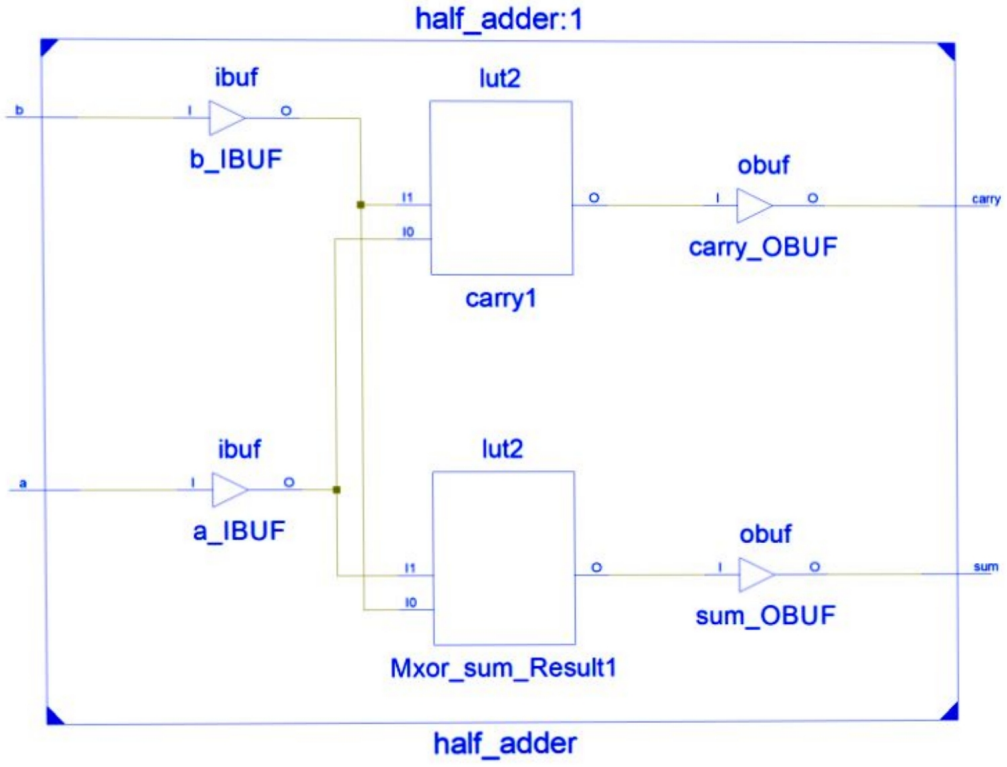
half_adder:1
ibuf
lut2
b
I
O
b_IBUF
I1
I0
obuf
carry
carry_OBUF
carry1
ibuf
lut2
a
a_IBUF
obuf
sum
sum_OBUF
Mxor_sum_Result1
half_adder

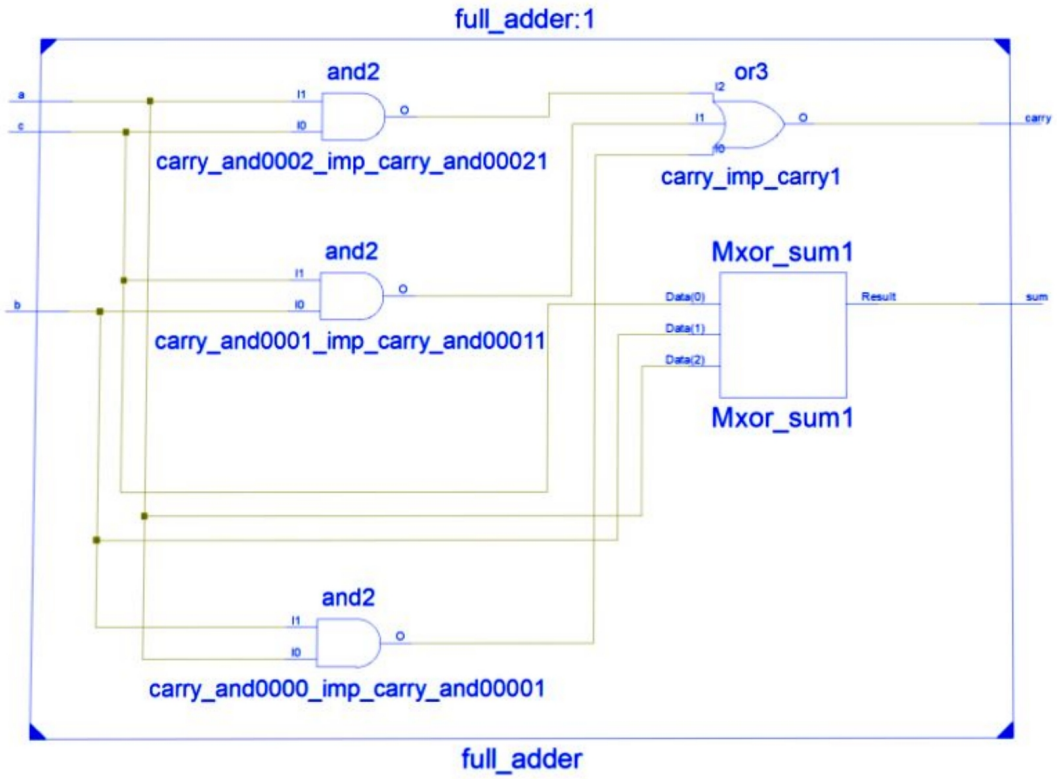
full_adder:1
and2
or3
carry_and0002_imp_carry_and00021
carry_imp_carry1
and2
Mxor_sum1
carry_and0001_imp_carry_and00011
Mxor_sum1
and2
carry_and0000_imp_carry_and00001
full_adder

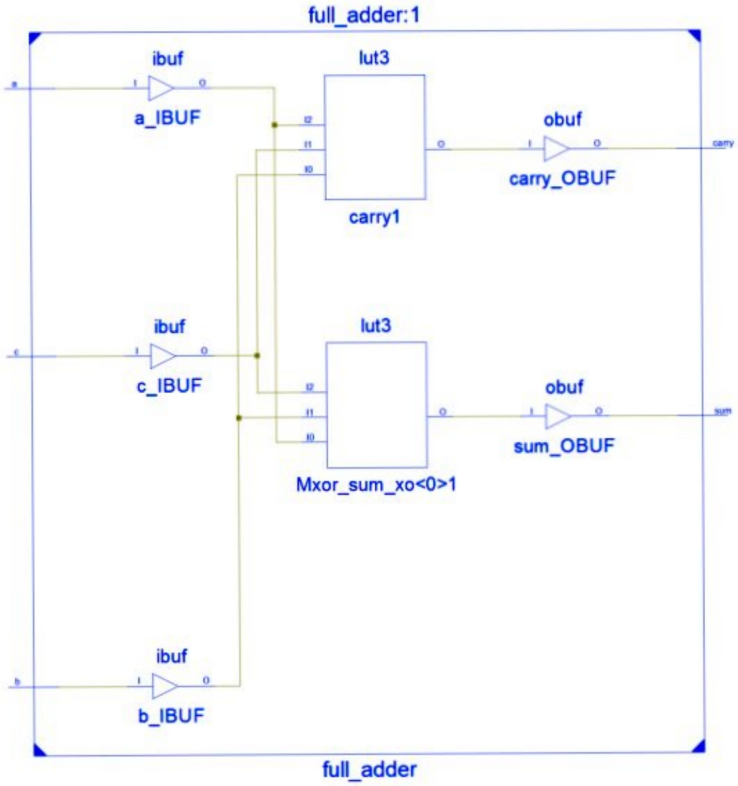
full_adder:1
ibuf
lut3
a_IBUF
obuf
carry_OBUF
carry1
ibuf
lut3
c_IBUF
obuf
sum_OBUF
Mxor_sum_xo<0>1
ibuf
b_IBUF
full_adder

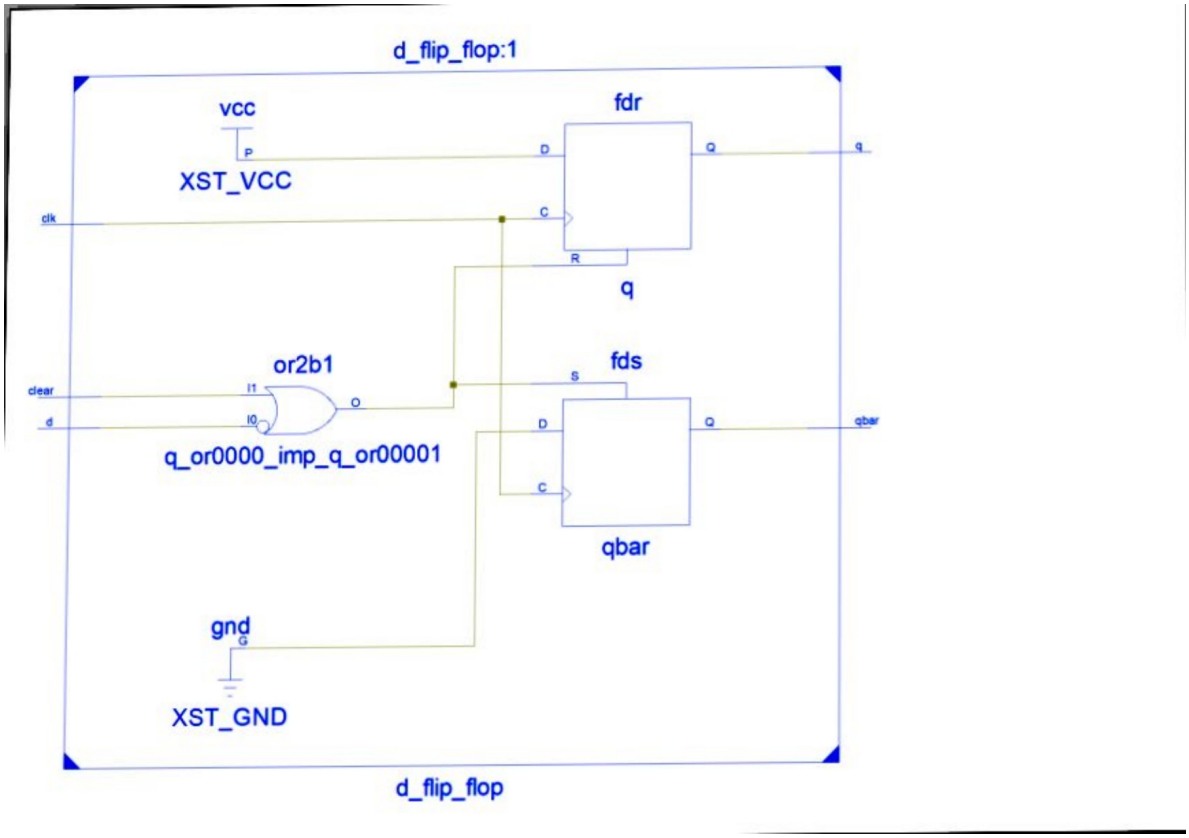
d_flip_flop:1
vcc
P
XST_VCC
fdr
D
Q
q
clk
C
R
q
or2b1
clear
I1
O
d
I0
q_or0000_imp_q_or00001
fds
S
D
Q
qbar
C
qbar
gnd
G
XST_GND
d_flip_flop

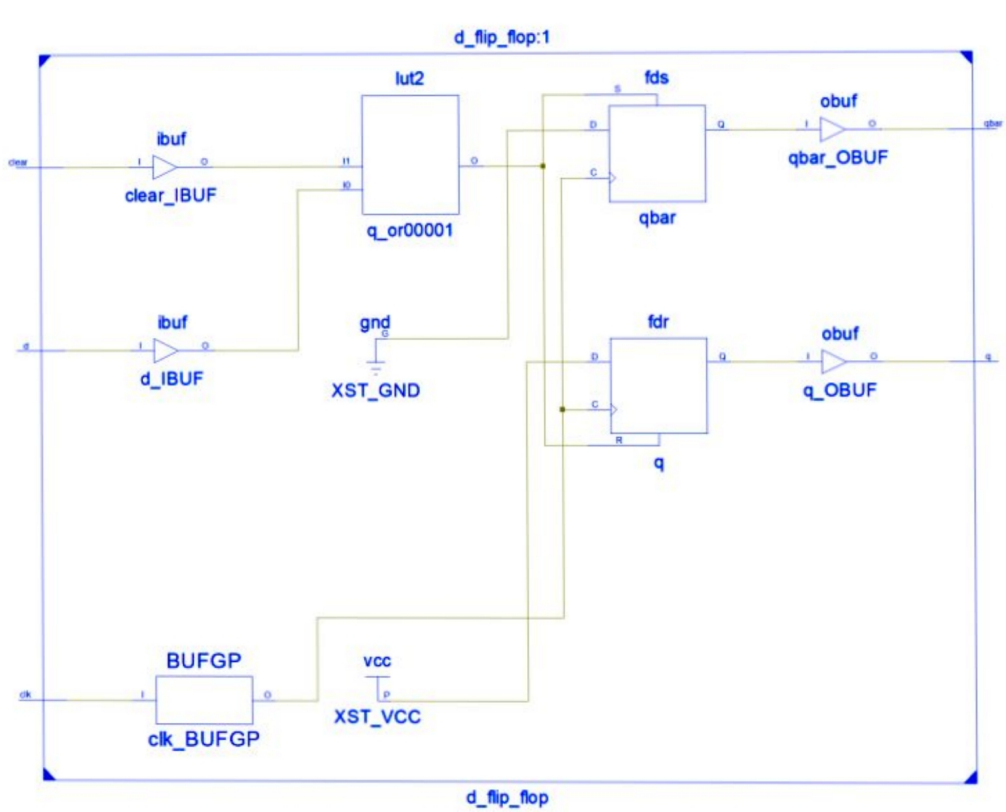
d_flip_flop:1
lut2
fds
obuf
ibuf
clear
I
O
clear_IBUF
I1
I0
O
q_or00001
S
D
Q
C
qbar
I
O
qbar_OBUF
qbar
ibuf
d
I
O
d_IBUF
gnd
G
XST_GND
fdr
D
Q
C
R
q
obuf
I
O
q_OBUF
q
BUFGP
clk
I
O
clk_BUFGP
vcc
P
XST_VCC
d_flip_flop

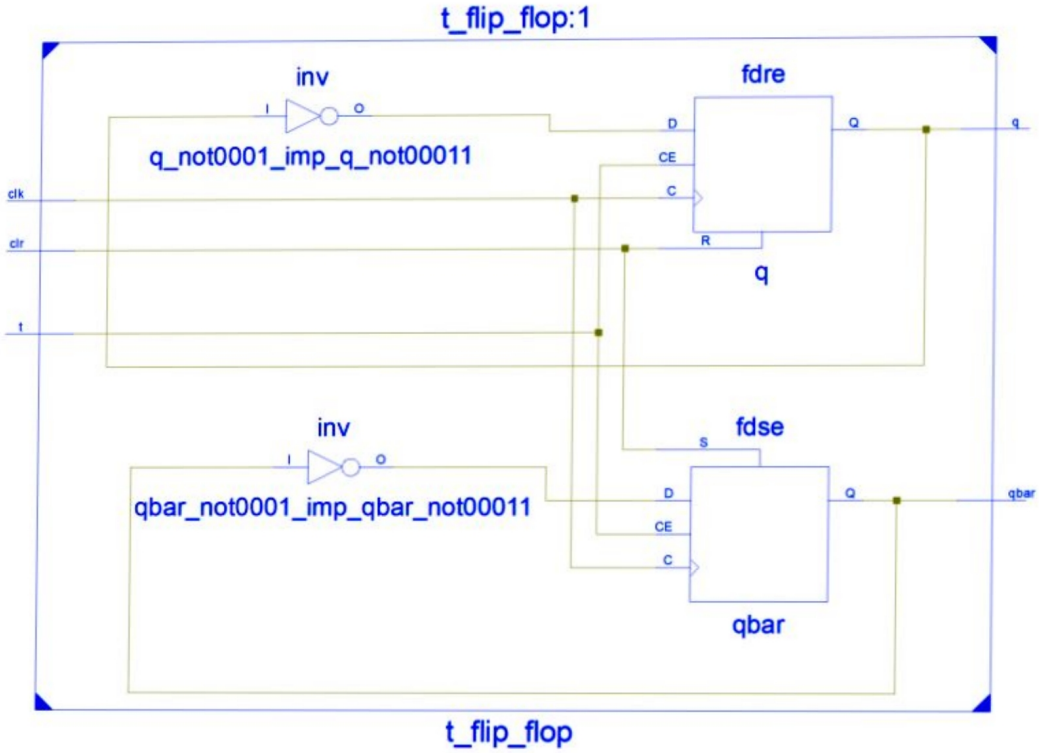
t_flip_flop:1
inv
fdre
q_not0001_imp_q_not00011
clk
clr
t
q
inv
fdse
qbar_not0001_imp_qbar_not00011
qbar
t_flip_flop

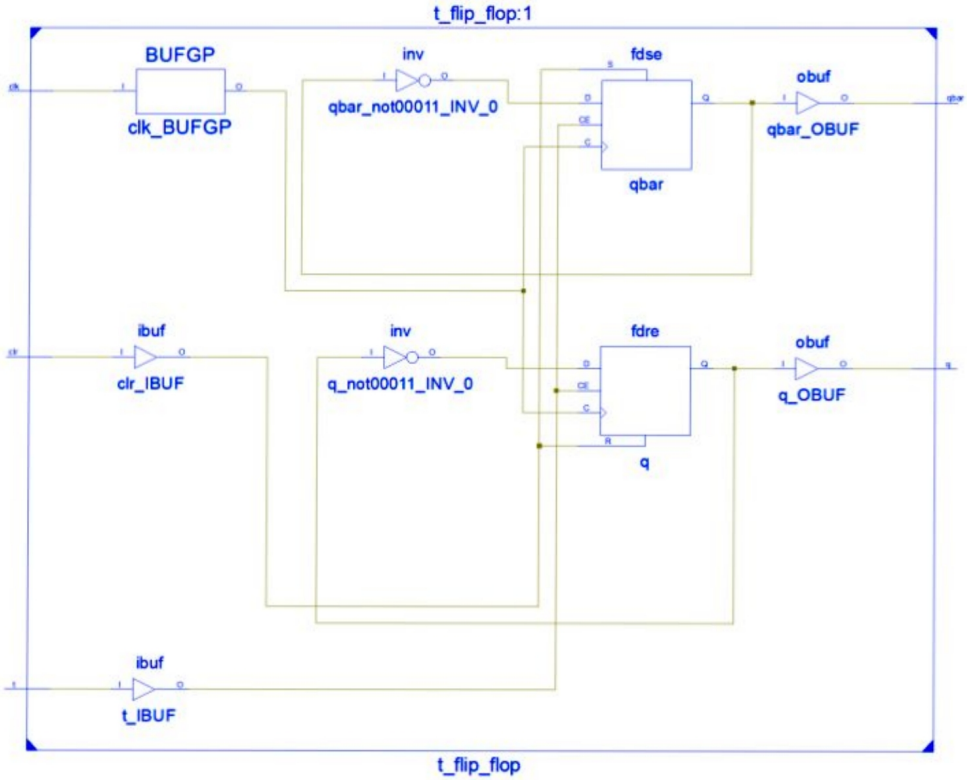
t_flip_flop:1
BUFGP
clk_BUFGP
inv
qbar_not00011_INV_0
fdse
qbar
obuf
qbar_OBUF
ibuf
clr_IBUF
inv
q_not00011_INV_0
fdre
q
obuf
q_OBUF
ibuf
t_IBUF
t_flip_flop

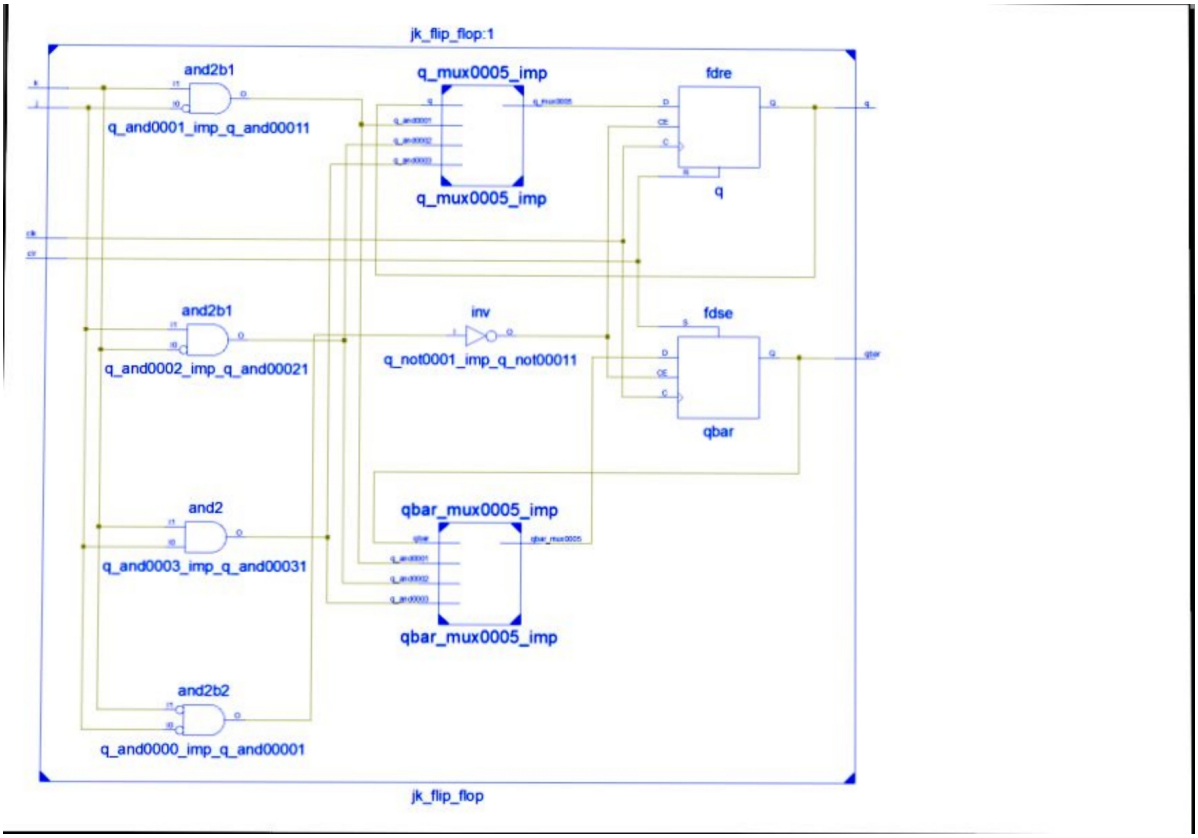
jk_flip_flop:1
and2b1
q_and0001_imp_q_and00011
q_mux0005_imp
q_mux0005_imp
fdre
q
and2b1
q_and0002_imp_q_and00021
inv
q_not0001_imp_q_not00011
fdse
qbar
and2
q_and0003_imp_q_and00031
qbar_mux0005_imp
qbar_mux0005_imp
and2b2
q_and0000_imp_q_and00001
jk_flip_flop

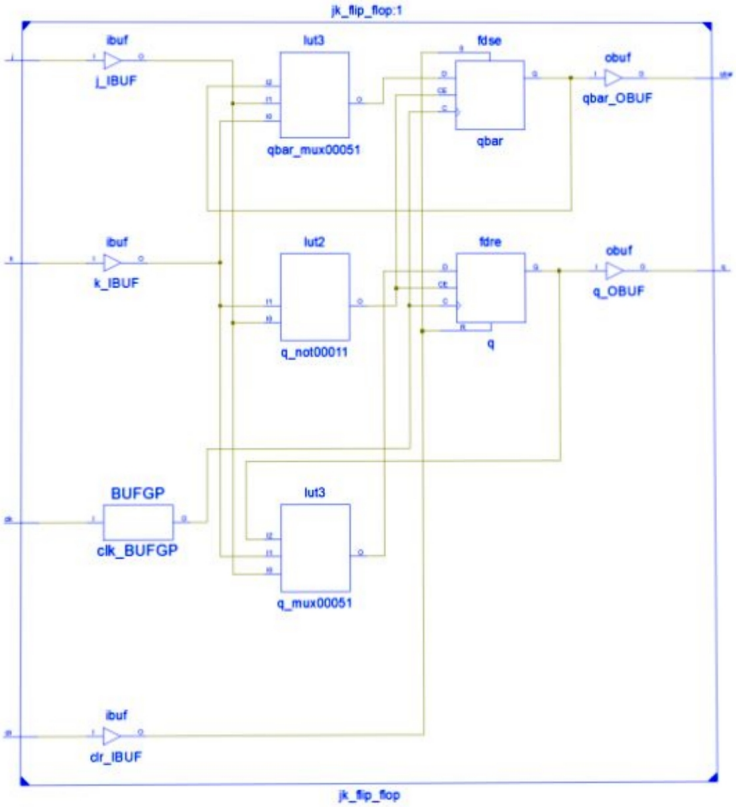
jk_flip_flop:1
ibuf
j_IBUF
lut3
qbar_mux00051
fdse
qbar
obuf
qbar_OBUF
ibuf
k_IBUF
lut2
q_not00011
fdre
q
obuf
q_OBUF
BUFGP
clk_BUFGP
lut3
q_mux00051
ibuf
clr_IBUF
jk_flip_flop