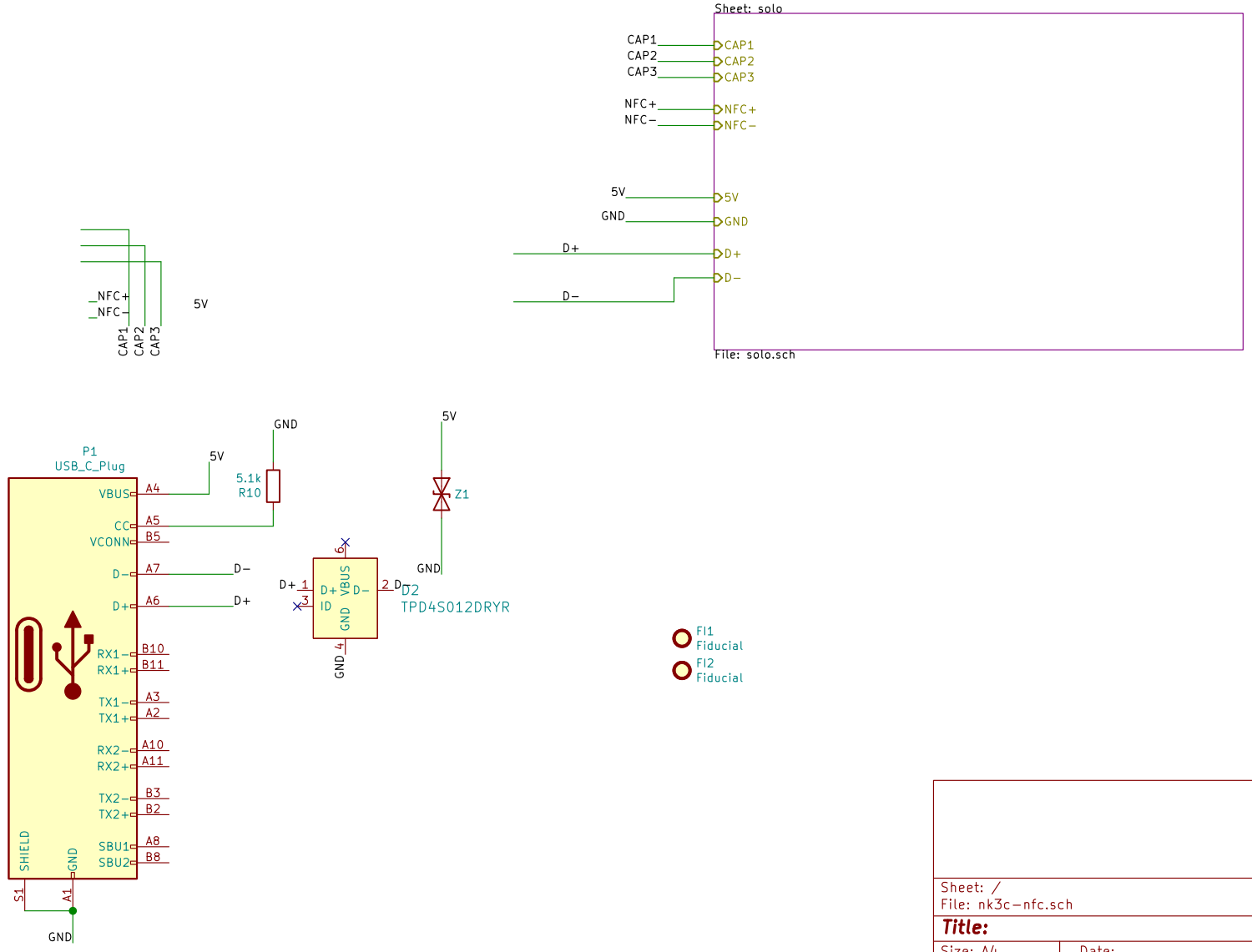

Sheet: /
File: nk3c−nfc.sch

Title:

Size: A4	Date:	Rev:
KiCad E.D.A. kicad 5.1.12−84ad8e8a8692ubuntu21.04.1		Id: 1/3

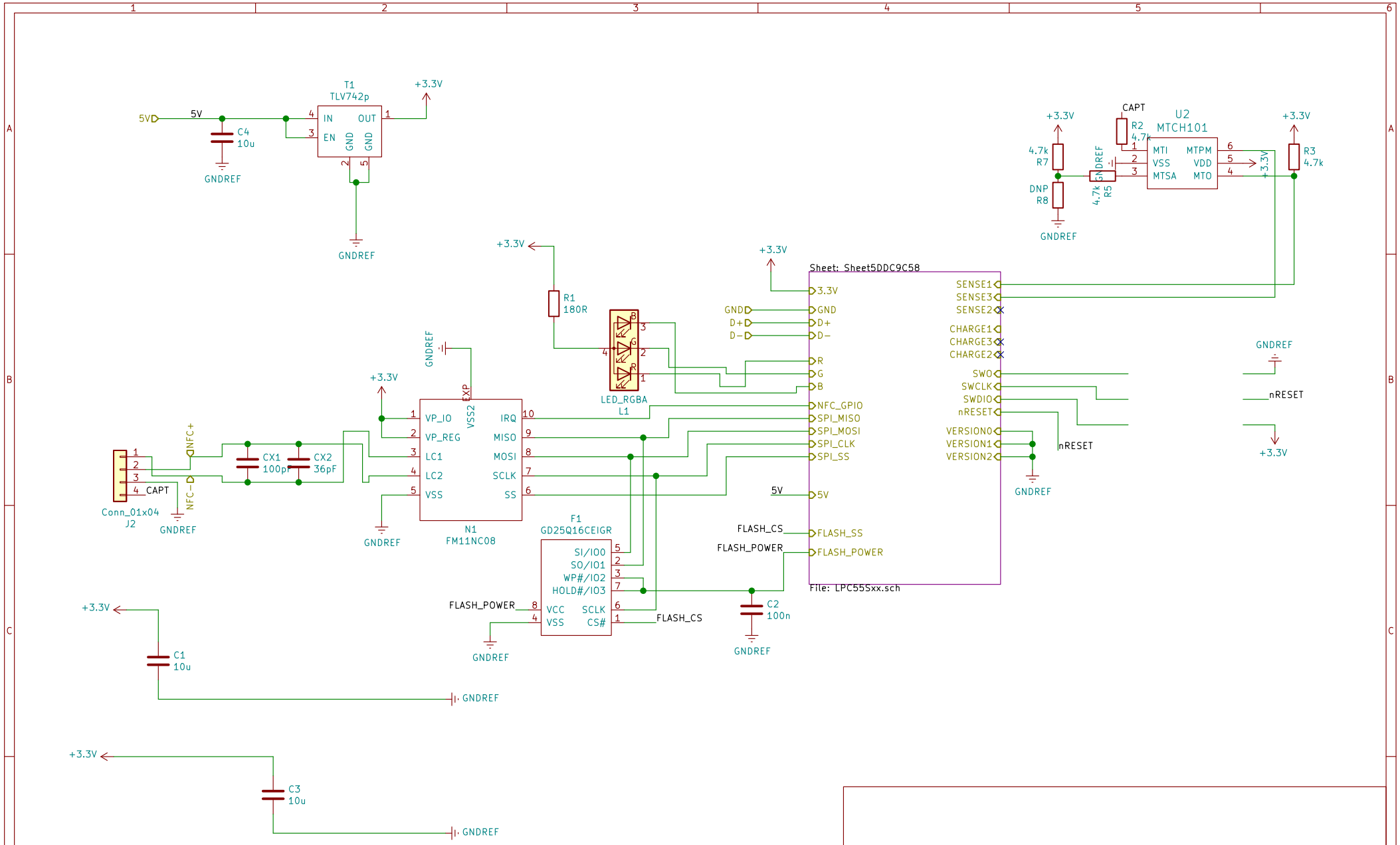

Sheet: /solo/
File: solo.sch

Title:

Size: A4	Date:	Rev:
KiCad E.D.A. kicad 5.1.12-84ad8e8a8692ubuntu21.04.1		Id: 2/3

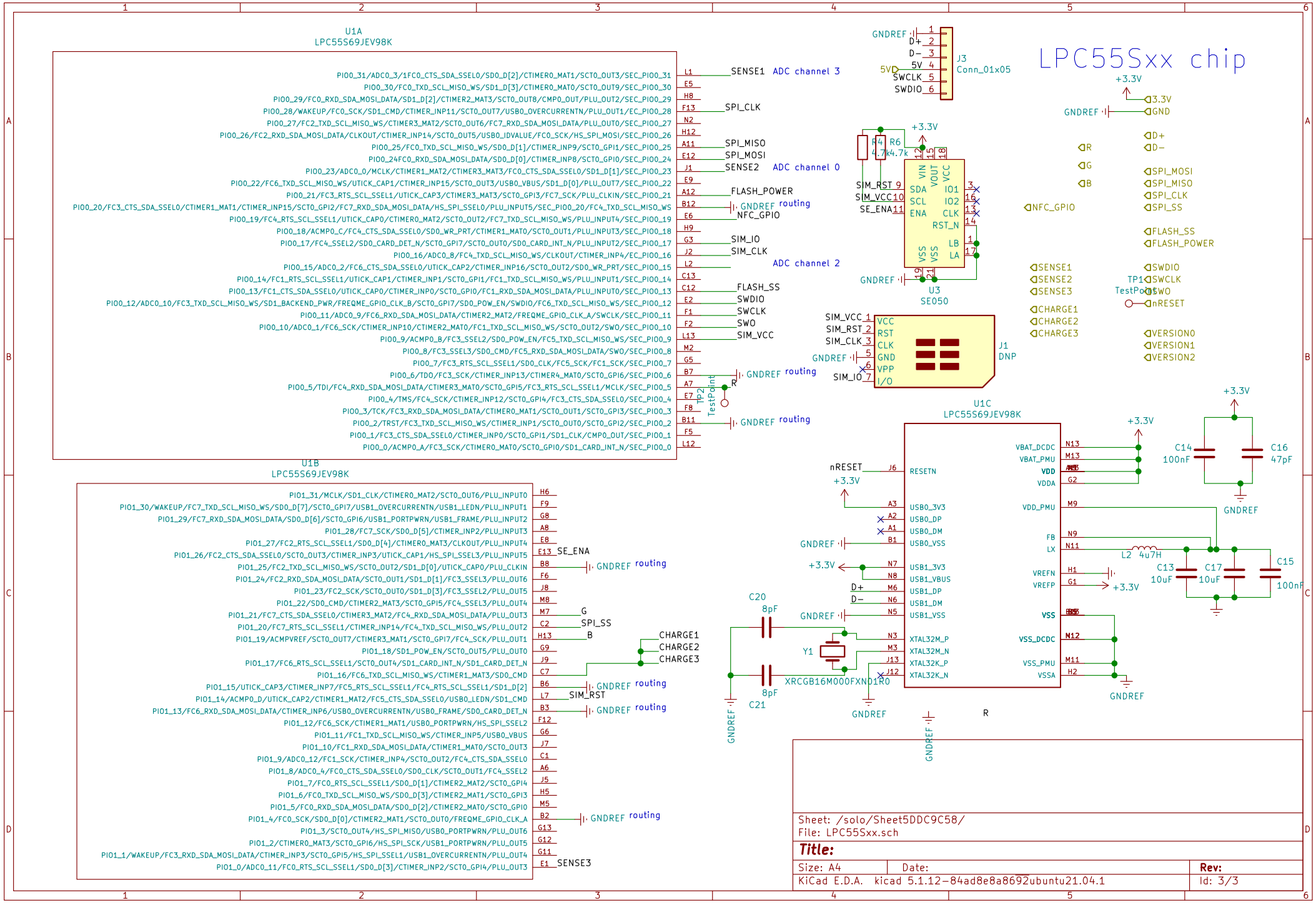
LPC55Sxx chip
U1A
LPC55S69JEV98K
U1B
LPC55S69JEV98K
U1C
LPC55S69JEV98K
J3
Conn_01x05
U3
SE050
J1
DNP
TP2
TestPoint
Y1
XRCGB16M000FXN01R0
C20
8pF
C21
8pF
C13
10uF
C14
100nF
C15
100nF
C16
47pF
C17
10uF
L2
4u7H
R4
4.7k
R6
4.7k
SENSE1
ADC channel 3
SPI_CLK
SPI_MISO
SPI_MOSI
SENSE2
ADC channel 0
FLASH_POWER
GNDREF routing
NFC_GPIO
SIM_IO
SIM_CLK
ADC channel 2
FLASH_SS
SWDIO
SWCLK
SWO
SIM_VCC
SE_ENA
G
SPI_SS
B
CHARGE1
CHARGE2
CHARGE3
SIM_RST
SENSE3
nRESET
+3.3V
GNDREF
D+
D−
5V
SWCLK
SWDIO
SENSE1
SENSE2
SENSE3
CHARGE1
CHARGE2
CHARGE3
VERSION0
VERSION1
VERSION2
Sheet: /solo/Sheet5DDC9C58/
File: LPC55Sxx.sch
Title:
Size: A4
Date:
Rev:
KiCad E.D.A. kicad 5.1.12-84ad8e8a8692ubuntu21.04.1
Id: 3/3