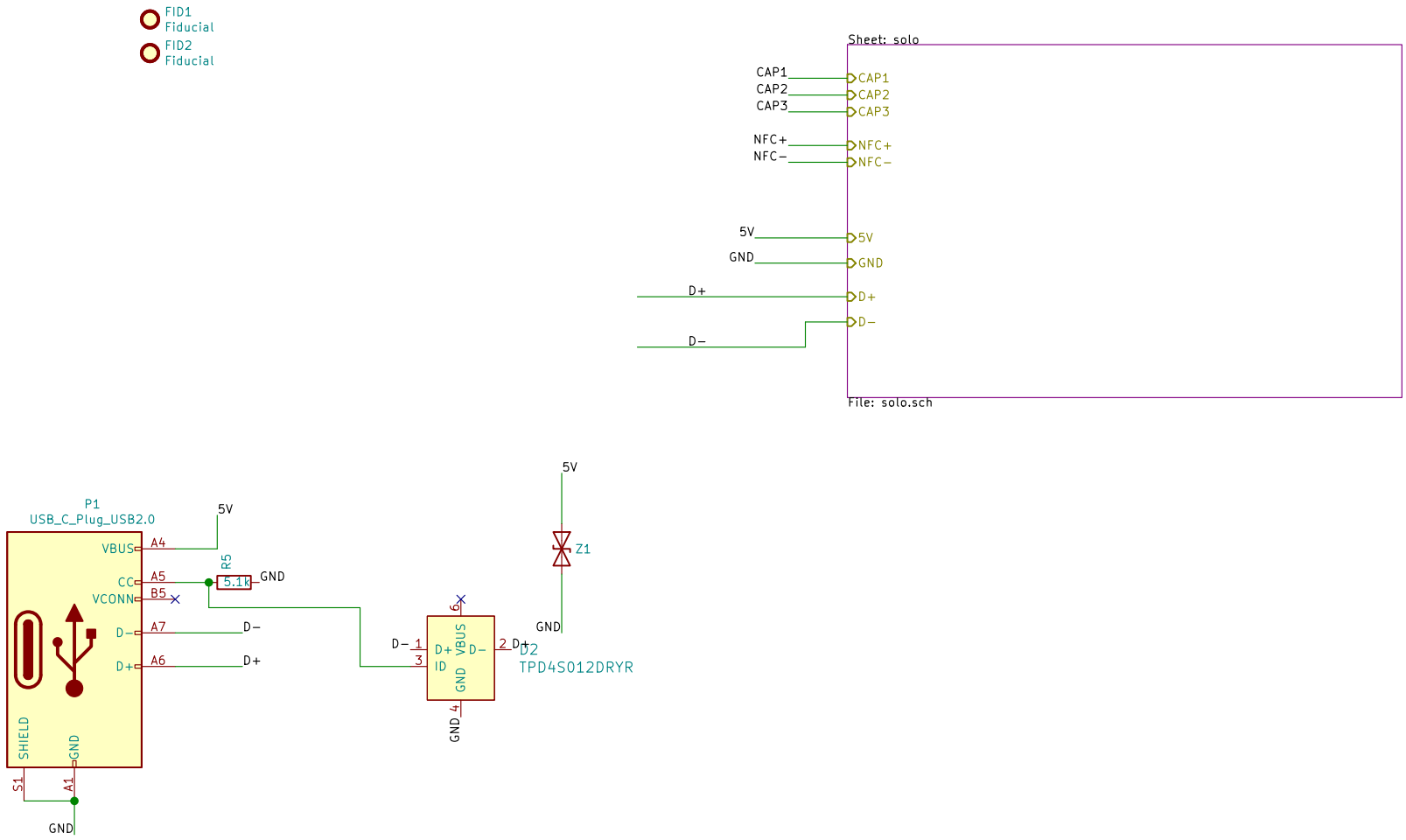

Sheet: /
File: nk3cn−zeus.sch

Title:

Size: A4	Date:	Rev:
KiCad E.D.A. kicad 5.1.12−84ad8e8a8692ubuntu21.10.1		Id: 1/3

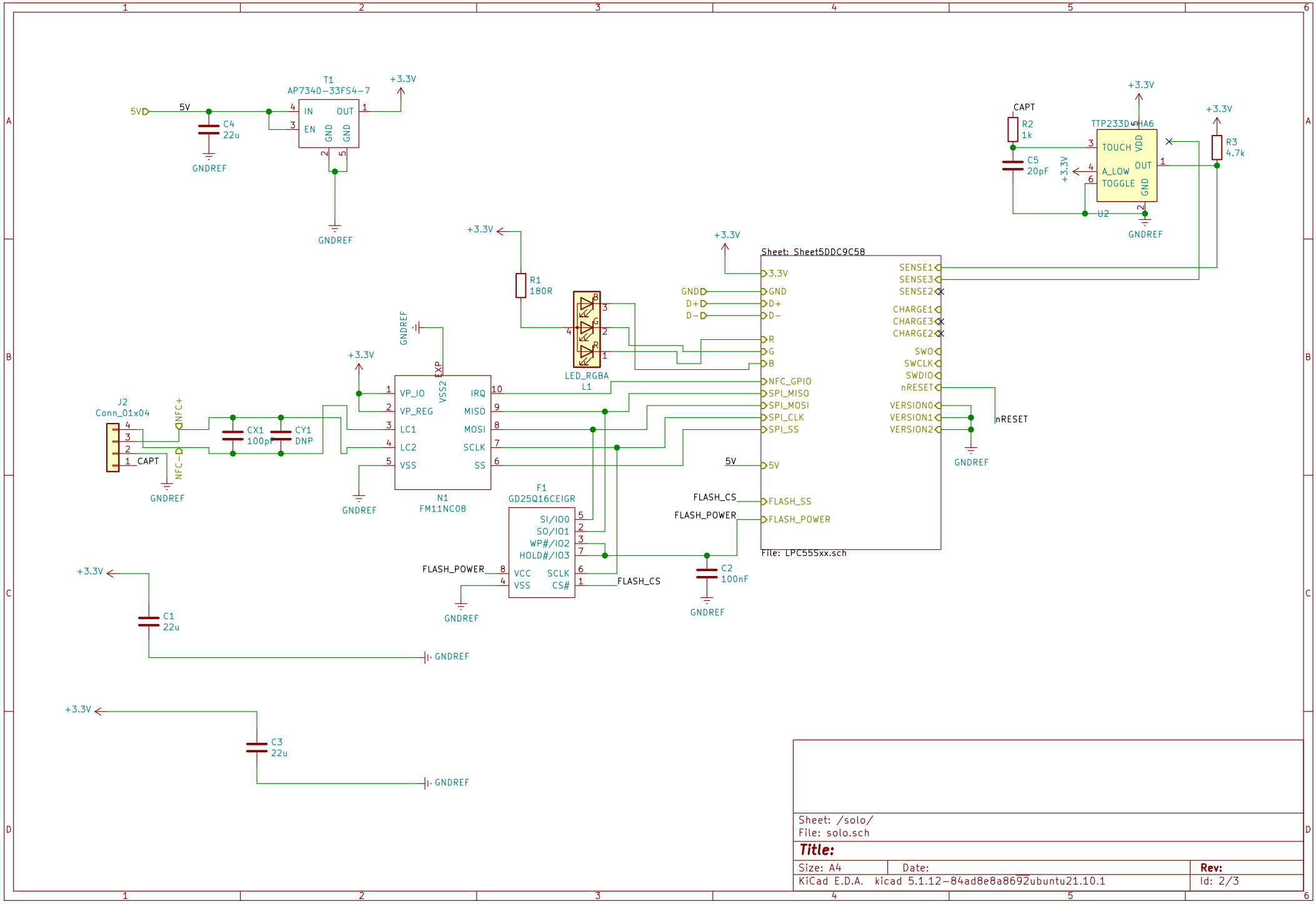

Sheet: /solo/
File: solo.sch

Title:

Size: A4	Date:	Rev:
KiCad E.D.A. kicad 5.1.12-84ad8e8a8692ubuntu21.10.1		Id: 2/3

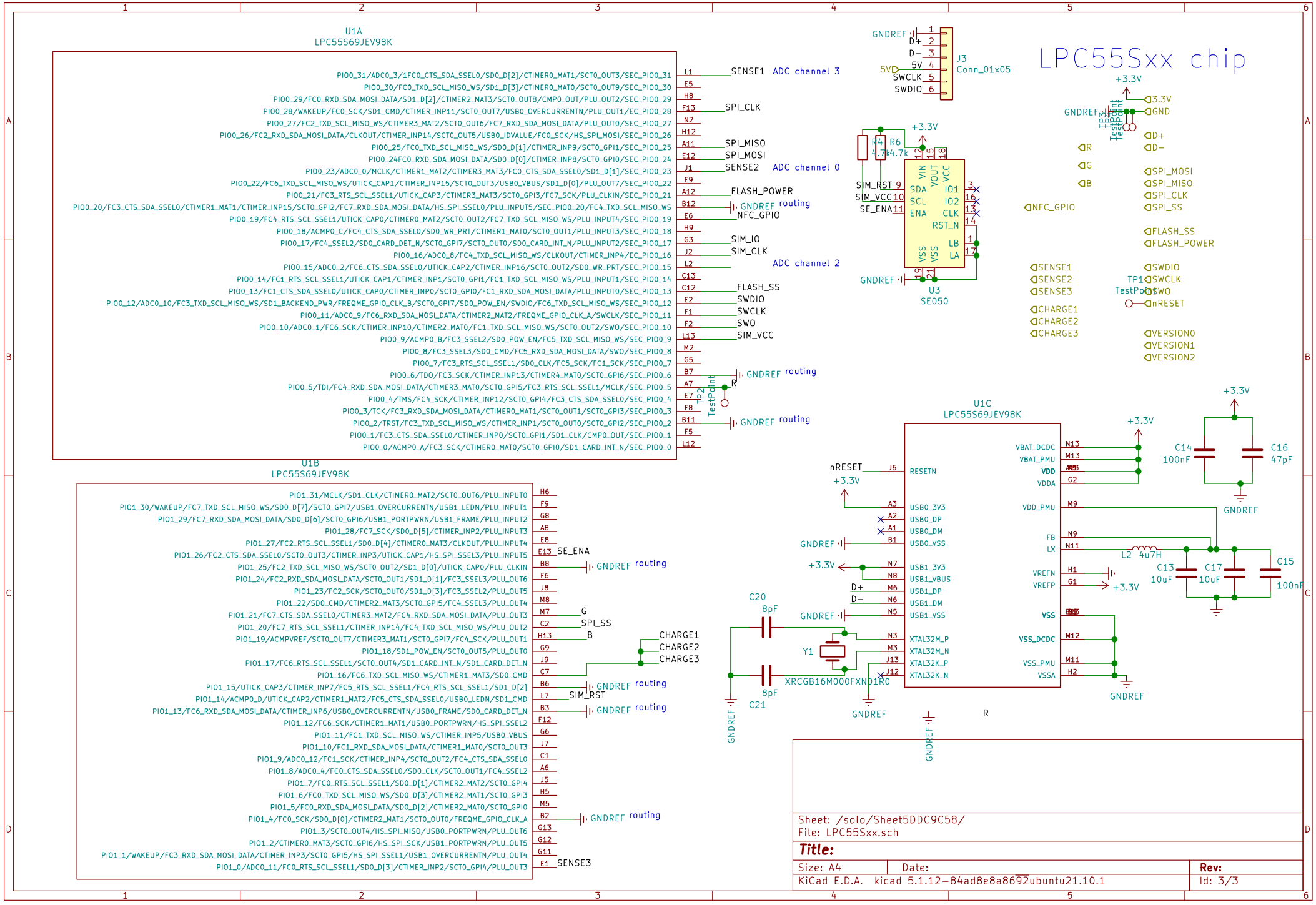
LPC55Sxx chip
U1A
LPC55S69JEV98K
U1B
LPC55S69JEV98K
U1C
LPC55S69JEV98K
U3
SE050
J3
Conn_01x05
SENSE1 ADC channel 3
SPI_CLK
SPI_MISO
SPI_MOSI
SENSE2 ADC channel 0
FLASH_POWER
GNDREF routing
NFC_GPIO
SIM_IO
SIM_CLK
ADC channel 2
FLASH_SS
SWDIO
SWCLK
SWO
SIM_VCC
SE_ENA
SIM_RST
CHARGE1
CHARGE2
CHARGE3
SENSE3
nRESET
XRCGB16M000FXN01R0
Sheet: /solo/Sheet5DDC9C58/
File: LPC55Sxx.sch
Title:
Size: A4
Date:
Rev:
KiCad E.D.A. kicad 5.1.12-84ad8e8a8692ubuntu21.10.1
Id: 3/3