Research Paper 1

TOPIC :- Study of Lathe Machine Operations and Applications

With the development of modern industrial systems, lathe machines enhance the practical application of machining processes in manufacturing industries, meet the needs of current production requirements, and better promote the development and progress of related engineering fields. The application of lathe machines is to remove material from rotating workpieces using cutting tools, so that the shape, size, and surface finish of the original material can be improved to form a finished component. This machining process provides better accuracy and performance than raw materials and can meet deeper applications in manufacturing industries. In this paper, the study of lathe machine operations will focus on the analysis of machining processes and their performance. It is hoped that the research in this paper can provide some references and suggestions for the development of machining technologies.

[Keywords] Lathe Machine; Machining Operations; Manufacturing Process; Performance Analysis

Introduction

In terms of the development of machining processes, lathe machines have been widely used in automobile, aerospace, and machinery manufacturing industries. With the development of modern industrial technology, the application of lathe machines in related industries has become more and more extensive. Improving the efficiency and accuracy of lathe machining has certain positive significance for enhancing the progress of manufacturing industries. The advancement of science and technology has laid a solid foundation for improving the performance and capability of lathe machines.

Further improving the performance of lathe machines can better promote the development of manufacturing industries and meet the actual needs of precision machining. Lathe machines play a crucial role in producing high-quality components with required dimensions and surface finish.

Therefore, research on improving machining efficiency and using advanced lathe operations has become an important topic in modern manufacturing technology. In this paper, the study of lathe machine operations mainly analyzes different machining processes such as turning, facing, drilling, and threading, and explains their advantages in industrial applications, in order to better promote the performance and application of lathe machines.

1. **Study of Machining Effect in Lathe Machine Operations**

In this paper, the machining effect in lathe machine operations mainly discusses the influence of various machining processes such as turning, facing, and drilling on the performance of the workpiece. The application of lathe machine operations improves the dimensional accuracy, surface finish, and overall quality of the machined components. By selecting appropriate cutting tools and machining conditions, the material properties of the workpiece can be effectively enhanced, resulting in better performance in practical applications.

1.1 Analysis of Machining Process and Material Removal

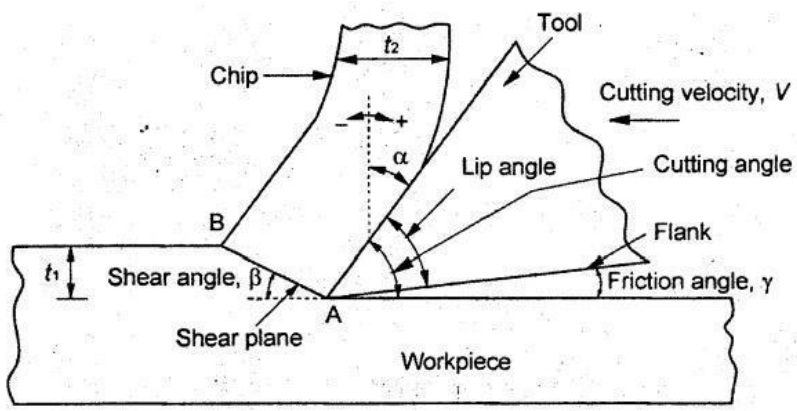

Figure 1.10 Mechanism of metal cutting

Lathe machine operations are widely used for removing excess material from a rotating workpiece to achieve the desired shape and size. The machining process involves the interaction between the cutting tool and the workpiece, where material is removed in the form of chips. The efficiency of material removal depends on factors such as cutting speed, feed rate, and depth of cut. During machining, proper control of these parameters ensures stable cutting conditions and improves the quality of the final product. The machining effect also depends on the type of material being processed and the tool material used for cutting operations.

1.2 Analysis of Machining Effect on Workpiece Performance

The machining effect of lathe operations significantly influences the mechanical and surface properties of the workpiece. Proper machining conditions result in improved surface finish, reduced roughness, and enhanced dimensional accuracy. According to experimental observations, optimized machining parameters lead to better performance and longer service life of components. The distribution of cutting forces during machining also affects the stability of the process and the quality of the machined surface.

Furthermore, it has been observed that controlled machining conditions reduce tool wear and improve efficiency in production. Compared to improper machining processes, optimized lathe operations produce components with higher precision and better mechanical properties. This demonstrates that the machining effect plays a crucial role in determining the overall performance of lathe machine operations in industrial applications.

2. Analysis of Cutting Parameters and Machining Conditions in Lathe Machine

Cutting speed, feed rate, and depth of cut are the primary parameters that affect lathe machining operations. Cutting speed refers to the speed at which the workpiece rotates, while feed rate indicates the movement of the cutting tool along the workpiece, and depth of cut represents the thickness of material removed in a single pass. These parameters must be properly balanced to achieve efficient machining. Higher cutting speeds increase productivity but may lead to higher tool wear, whereas lower speeds improve tool life but reduce production rate. Similarly, increasing feed rate and depth of cut improves material removal rate but may negatively affect surface finish.

2.1 Analysis of Machining Conditions and Their Effect on Performance

Machining conditions such as tool material, lubrication, cooling, and workpiece material significantly influence the performance of lathe operations. Proper lubrication and cooling reduce friction and heat generation during machining, thereby improving tool life and surface quality. According to experimental observations, optimized machining conditions lead to reduced tool wear and improved dimensional accuracy. The stability of the machining process also depends on maintaining proper cutting conditions, which helps in minimizing vibrations and improving surface finish.

Furthermore, it has been observed that improper selection of machining parameters can lead to poor surface quality, excessive tool wear, and reduced efficiency. In contrast, optimized cutting parameters and controlled machining conditions result in better performance, higher productivity, and improved quality of machined components. This highlights the importance of selecting suitable cutting parameters in lathe machine operations.

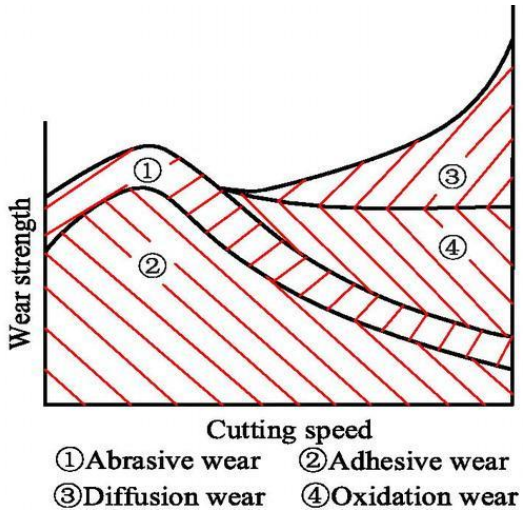

3. Analysis of Machining Performance in Lathe Operations

The analysis of machining performance in lathe operations mainly discusses the effectiveness of machining processes in terms of productivity, accuracy, and surface quality. The performance of lathe machining depends on various factors such as cutting parameters, tool condition, and material properties. By optimizing these factors, the machining process can achieve higher efficiency and improved quality of finished components. Proper control of machining performance ensures better utilization of resources and enhances industrial productivity.

3.1 Analysis of Productivity and Efficiency in Lathe Machining

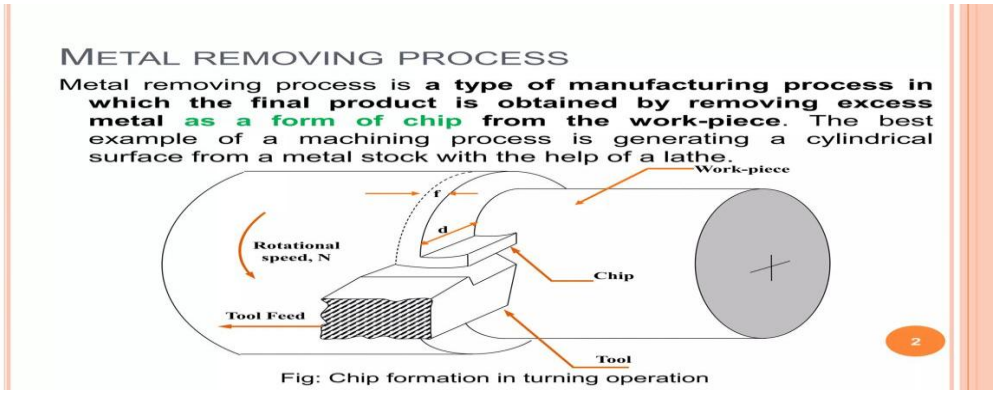

Productivity and efficiency are important aspects of machining performance in lathe operations. The rate of material removal and the time required to complete a machining operation directly affect production efficiency. Higher material removal rates increase productivity but must be balanced with tool life and surface quality. Efficient machining reduces production time and cost while maintaining the required quality standards. The use of advanced machining techniques and proper parameter selection contributes to improved performance in lathe operations.

3.2 Analysis of Surface Quality and Dimensional Accuracy

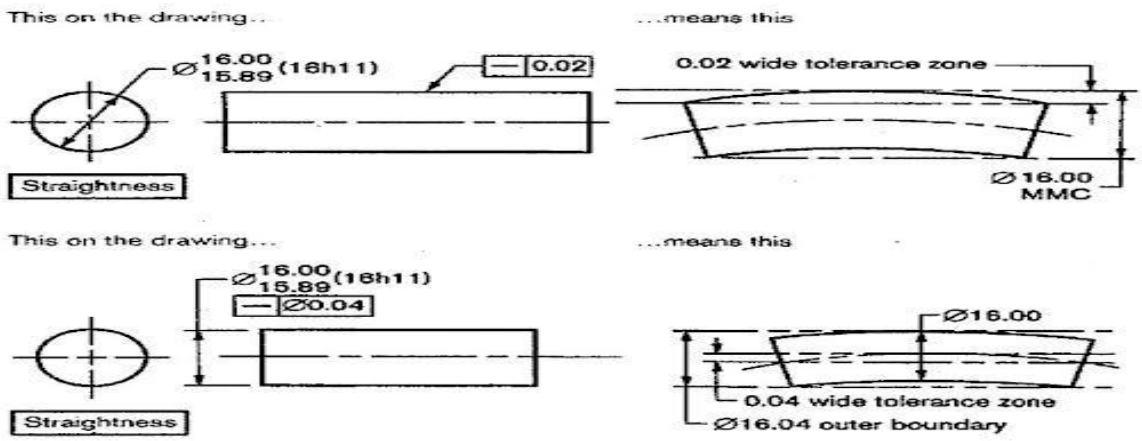

The machining performance also depends on the surface quality and dimensional accuracy of the finished component. Proper machining conditions result in smooth surface finish and precise dimensions. According to experimental observations, optimized machining parameters reduce surface roughness and improve accuracy. The interaction between the cutting tool and workpiece plays a significant role in determining the final surface characteristics. Maintaining stability during machining helps in achieving consistent quality in production.

Furthermore, it has been observed that improper machining conditions can lead to defects such as rough surfaces, dimensional errors, and reduced component life. In contrast, optimized lathe operations produce components with high precision and better mechanical properties. This demonstrates that machining performance is a key factor in ensuring the quality and reliability of manufactured components in industrial applications.

4. Application Analysis of Lathe Machine in Industrial Manufacturing

The use of lathe machines in industrial manufacturing provides several benefits, including improved productivity, reduced production time, and enhanced product quality. The introduction of CNC lathe machines has further improved the efficiency and accuracy of machining operations. According to industrial observations, automated lathe machines reduce human errors and ensure consistent production quality. The use of modern machining techniques also helps in minimizing material wastage and improving cost efficiency.

Furthermore, it has been observed that proper utilization of lathe machines leads to better performance and reliability of manufactured components. Compared to traditional machining methods, advanced lathe operations provide higher precision and better surface finish. This demonstrates that lathe machines play a crucial role in modern industrial manufacturing and contribute significantly to the development of engineering industries.

5. Analysis of Surface Finish in Lathe Machining Operations

The analysis of surface finish in lathe machining operations mainly discusses the quality of the machined surface produced during cutting processes. Surface finish is an important factor that affects the performance, appearance, and durability of mechanical components. The quality of surface finish depends on various factors such as cutting parameters, tool condition, and material properties. By controlling these factors effectively, it is possible to achieve smooth and high-quality surfaces in lathe machining operations.

The surface quality of machined components has a direct impact on their performance and service life. Smooth surfaces reduce friction, wear, and corrosion, thereby improving the efficiency and durability of components. According to experimental observations, optimized machining conditions significantly reduce surface roughness and enhance the overall quality of the product. Proper lubrication and cooling during machining also contribute to improved surface finish.

Furthermore, it has been observed that poor surface finish can lead to mechanical failures and reduced performance of components. In contrast, high-quality surface finish ensures better contact between mating parts and increases the reliability of the system. This highlights the importance of controlling surface finish in lathe machining operations for achieving superior performance in industrial applications.

6. Conclusion

In summary, it can be observed that lathe machine operations play a significant role in improving the performance and quality of machined components. The proper selection of cutting parameters, machining conditions, and tool materials greatly influences the efficiency, surface finish, and dimensional accuracy of the workpiece. Lathe machining processes are essential for modern manufacturing industries, as they provide high precision and reliability in production.

The improvement in machining performance is necessary to meet the increasing demands of industrial applications such as automobile, aerospace, and general manufacturing sectors. By adopting optimized machining techniques and advanced lathe technologies, industries can achieve better productivity and cost efficiency. At the same time, attention must be given to factors such as tool wear, surface finish, and machining stability to ensure consistent performance.

For example, proper control of cutting speed, feed rate, and depth of cut is required to maintain the balance between productivity and quality. The development of CNC lathe machines and modern machining practices has further enhanced the capabilities of lathe operations. Only by adopting suitable machining strategies and continuous technological improvements can the manufacturing industry achieve better growth and development.

7. References

- Engineering Toolbox – Lathe Machine Basics https://www.engineeringtoolbox.com/lathe-machine-d_1286.html
- ScienceDirect – Lathe Machine Overview https://www.sciencedirect.com/topics/engineering/lathe-machine
- Mech4Study – Lathe Machine: Definition, Parts, Types, Operations https://www.mech4study.com/2016/02/lathe-machine-definition-parts-types-operations.html
- Technology Student – Lathe Machine Introduction https://www.technologystudent.com/equip1/lathe1.htm

Overall Summary of Research Paper

1. Introduction

- The paper discusses how lathe machine operations are used to improve the performance and quality of machined components in manufacturing industries.
- By applying different machining operations such as turning, facing, drilling, and threading, components with higher accuracy, better surface finish, and improved mechanical properties are produced.
- These improved machining processes are important for industries such as automobile, aerospace, and machinery manufacturing.

2. Study of Machining Effect in Lathe Machine Operations

2.1 Machining Process

- Lathe operations involve the removal of material from a rotating workpiece using cutting tools.
- The machining process improves dimensional accuracy and surface quality of components.
- Proper selection of machining conditions enhances overall performance.

3. Analysis of Cutting Parameters and Machining Conditions

3.1 Cutting Parameters

- Cutting speed, feed rate, and depth of cut are important parameters in lathe machining.
- These parameters directly affect surface finish, tool life, and machining efficiency.
- Proper selection of parameters ensures better productivity and quality.

4. **Analysis of Machining Performance in Lathe Operations**

4.1 Performance Improvements

- Optimized machining conditions increase productivity and reduce machining time.
- Surface roughness decreases with proper parameter selection.
- Machined components show improved dimensional accuracy and longer service life.

5. **Application Analysis of Lathe Machine in Industrial Manufacturing**

5.1 Industrial Applications

- Lathe machines are used in manufacturing engine shafts, bolts, nuts, pistons, and other components.
- They are widely used in automobile, aerospace, and general manufacturing industries
- Advanced CNC lathe machines improve automation and production efficiency.

6. Analysis of Surface Finish in Lathe Machining Operations

6.1 Surface Quality

- Surface finish improves with proper cutting conditions and sharp cutting tools.
- Smooth surfaces reduce friction and increase component life.
- Lubrication and cooling also improve surface quality.

7. **Conclusion**

- Lathe machine operations significantly improve the quality and performance of machined components.
- Proper selection of machining parameters and conditions is essential for achieving high productivity and accuracy.
- Modern machining techniques and CNC technology play an important role in industrial development and ensure better performance in manufacturing processes.

Research Paper 2

TOPIC :- Modern Trends in Casting Processes

With the development of modern industrial technology, casting processes have significantly improved the manufacturing of complex components, meet the needs of current production requirements, and promote the advancement of engineering industries. The application of modern casting techniques involves the use of advanced materials, automation, and precision control methods to enhance the properties of cast components. These processes provide better dimensional accuracy, improved surface finish, and higher mechanical strength compared to traditional casting methods. In this paper, the study of modern trends in casting processes focuses on the analysis of advanced casting techniques and their performance. It is hoped that this research can provide useful references and suggestions for the development of casting technologies.

[Keywords] Casting Processes; Die Casting; Investment Casting; Automation; Performance Analysis

1. Introduction

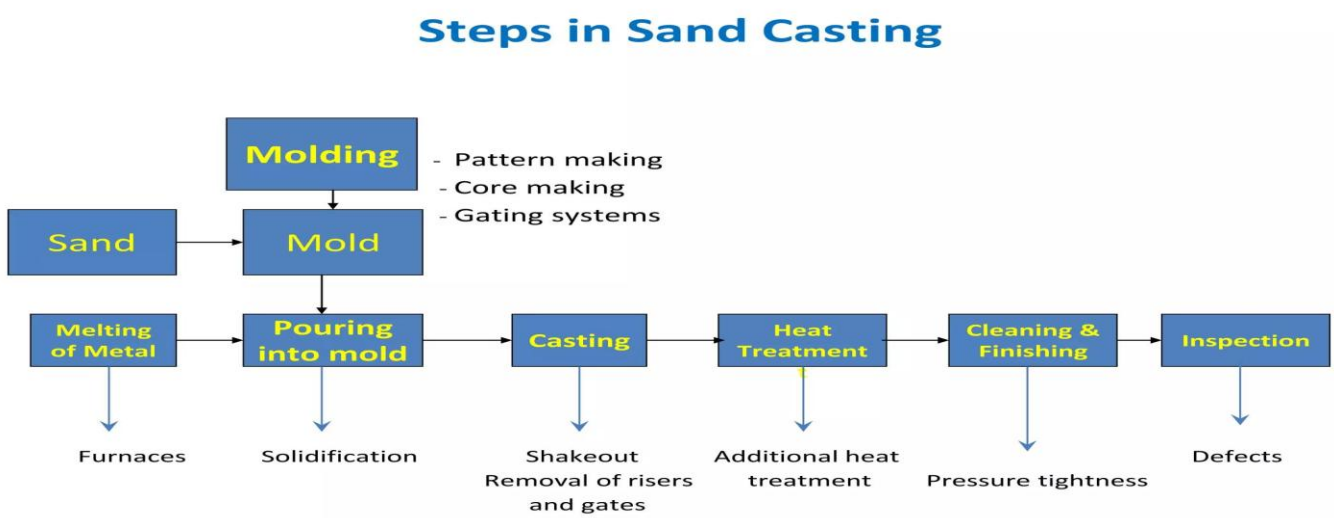

In terms of the development of casting processes, it has been widely used in automobile, aerospace, and heavy machinery industries. With the advancement of modern technology, the application of casting techniques in industrial production has become more efficient and precise. Improving the quality and performance of cast components has significant importance in enhancing industrial productivity. The progress in science and engineering has laid a strong foundation for the development of advanced casting methods.

Further improvement in casting processes helps in producing complex shapes with better mechanical properties and reduced material wastage. Modern casting techniques also reduce production time and improve cost efficiency in manufacturing industries.

Therefore, research on modern casting processes and their applications has become an important topic in manufacturing engineering. In this paper, the study of casting processes mainly analyzes modern techniques such as die casting, investment casting, and additive manufacturing-based casting, and explains their advantages in industrial applications, in order to promote the performance and efficiency of casting technologies.

2. Study of Modern Casting Techniques

In this paper, modern casting techniques mainly discuss advanced methods such as die casting, investment casting, and improved sand casting processes. These techniques enhance the quality of cast components by improving surface finish, dimensional accuracy, and mechanical strength. The use of automation and computer-controlled systems further improves the efficiency of casting processes.

Traditional casting methods have limitations in terms of accuracy and defect control, whereas modern techniques overcome these issues by implementing precise control mechanisms. The integration of digital technologies has also enabled better monitoring and optimization of casting processes.

3. Analysis of Advanced Casting Methods

Modern casting processes include several advanced methods that improve production quality and efficiency.

3.1Die Casting:

In this process, molten metal is injected into a mold under high pressure, resulting in components with high precision and excellent surface finish. It is widely used in automotive and electronics industries.

3.2Investment Casting:

This method uses a wax pattern to create molds, allowing the production of complex shapes with superior surface quality and minimal finishing requirements.

3.3Additive Manufacturing-Based Casting:

The use of 3D printing technology in casting allows rapid production of molds and patterns. This method reduces lead time and enables the production of complex geometries that are difficult to achieve using conventional techniques.These advanced methods help in reducing defects and improving the overall quality and consistency of cast components.

4. Analysis of Casting Parameters and Process Control

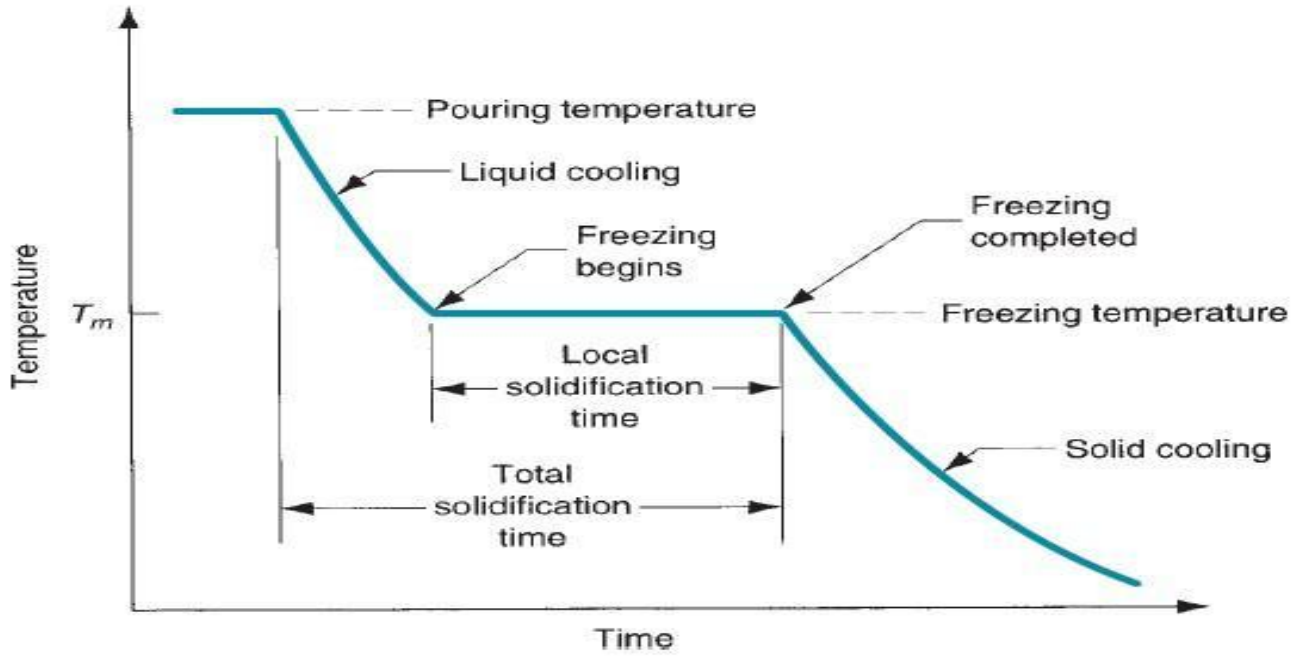

Casting performance depends on various parameters such as pouring temperature, cooling rate, and mold design. Proper control of these parameters is essential to achieve desired mechanical properties and minimize defects.

Higher pouring temperatures improve the fluidity of molten metal, allowing it to fill complex mold cavities. However, excessive temperatures may lead to defects such as gas porosity and oxidation. Cooling rate plays a significant role in determining the microstructure of the cast material. Faster cooling generally produces finer grain structures, which enhance strength and hardness.

Mold design is another critical factor that affects the quality of casting. Proper design ensures uniform solidification and reduces the occurrence of shrinkage defects. Optimization of these parameters leads to improved casting performance and reliability.

5.Application Analysis of Casting in Industrial Manufacturing

Casting processes are widely used in various industries such as automobile, aerospace, construction, and heavy machinery manufacturing.

In the automobile industry, casting is used to produce engine blocks, cylinder heads, and transmission components. In aerospace applications, casting is used to manufacture turbine blades and structural components that require high strength and precision.

In heavy machinery and construction industries, casting is used to produce large components such as machine frames and equipment parts. The versatility of casting processes makes them suitable for both small-scale and large-scale production.

Modern casting techniques have further enhanced industrial applications by improving efficiency, reducing costs, and ensuring consistent quality.

6. Analysis of Surface Finish in Casting Processes

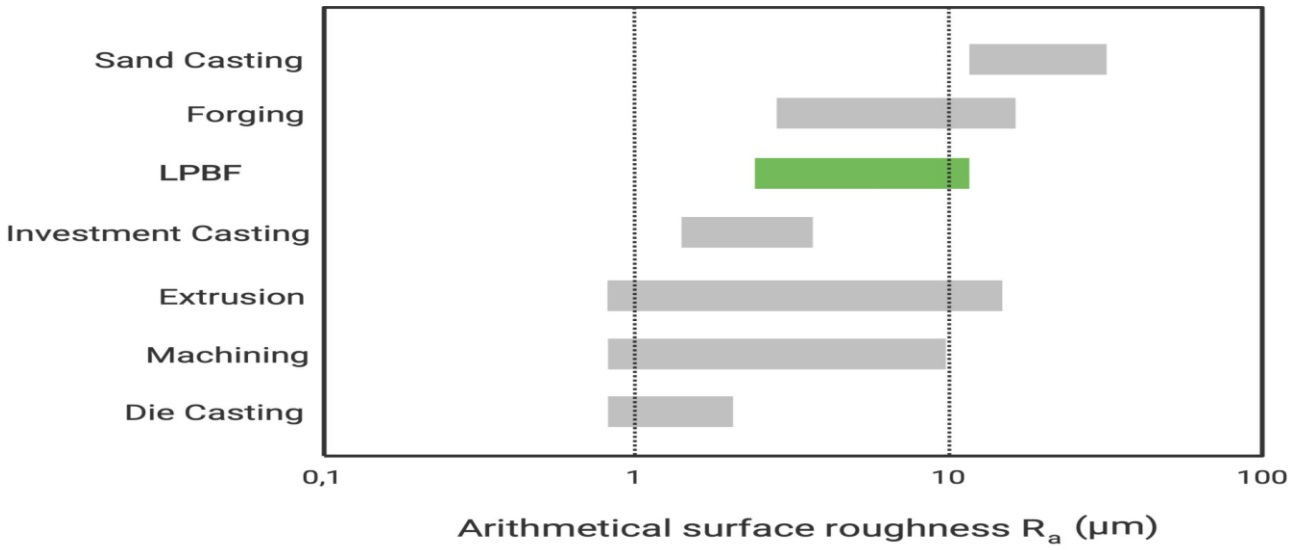

Surface finish is an important factor in determining the quality and performance of cast components. Advanced casting techniques improve surface smoothness and reduce the need for additional machining processes.

Factors affecting surface finish include mold material, pouring temperature, and solidification rate. High-quality molds produce smoother surfaces, while proper control of process parameters minimizes surface defects.

Improved surface finish reduces friction and wear, enhances aesthetic appearance, and increases the overall performance of the component. Modern casting methods focus on achieving better surface quality to meet industrial standards.

7. Analysis of Defects and Their Prevention

Casting defects such as porosity, shrinkage, cracks, and inclusions can affect the performance and reliability of components. These defects are caused by improper process parameters, poor mold design, and uncontrolled cooling conditions.

Porosity occurs due to trapped gases in the molten metal, while shrinkage defects are caused by uneven solidification. Cracks may develop due to thermal stresses during cooling.

These defects can be minimized by maintaining proper temperature control, improving mold design, and ensuring uniform cooling rates. Modern casting techniques use simulation and monitoring tools to predict and prevent defects, thereby improving product quality.

8. Conclusion

In summary, modern casting processes have significantly improved the quality and performance of manufactured components. The use of advanced techniques such as die casting, investment casting, and additive manufacturing has enhanced precision, reduced defects, and increased production efficiency.

The improvement in casting technology is essential to meet the increasing demands of industries such as automobile, aerospace, and machinery manufacturing. Proper control of casting parameters and the use of automation ensure better productivity and cost efficiency.

Modern casting processes continue to evolve with technological advancements, contributing to industrial growth and innovation. Only by adopting advanced casting methods and improving process control can industries achieve better performance and sustainability.

9.Refrences

1. ScienceDirect – Casting Process Overview
   https://www.sciencedirect.com/topics/engineering/casting-process
2. Engineering Toolbox – Casting Processes
   https://www.engineeringtoolbox.com/casting-processes-d_1287.html
3. Mech4Study – Types of Casting Process
   https://www.mech4study.com/2017/01/types-of-casting-process.html
4. Technology Student – Casting Introduction
   https://www.technologystudent.com/joints/cast1.html

Overall Summary of Research Paper

1. Introduction

- The paper discusses how modern casting processes are used to improve the performance and quality of manufactured components in various industries.
- By using advanced casting techniques such as die casting, investment casting, and additive manufacturing, components with higher accuracy, better surface finish, and improved mechanical properties are produced.
- These improved casting processes are important for industries such as automobile, aerospace, and heavy machinery manufacturing.

2. Study of Modern Casting Techniques

2.1 Casting Techniques

- Modern casting processes include techniques such as die casting, investment casting, and improved sand casting.
- These methods help in producing complex shapes with high precision and better surface quality.
- Automation and computer-controlled systems further improve efficiency and consistency.

3. Analysis of Advanced Casting Methods

3.1 Casting Methods

- Die casting produces components with high accuracy and smooth surface finish.
- Investment casting allows the production of complex shapes with minimal finishing.
- Additive manufacturing-based casting reduces production time and enables advanced design capabilities.

4. Analysis of Casting Parameters and Process Control

4.1 Process Parameters

- Casting performance depends on parameters such as pouring temperature, cooling rate, and mold design.
- Proper control of these parameters reduces defects and improves mechanical properties.
- Optimized process control ensures better quality and reliability of cast components.

5. Application Analysis of Casting in Industrial Manufacturing

5.1 Industrial Applications

- Casting processes are widely used in manufacturing engine components, turbine blades, and heavy machinery parts.
- They are essential in automobile, aerospace, and construction industries.
- Modern casting techniques improve productivity and reduce manufacturing cost.

6. Analysis of Surface Finish in Casting Processes

6.1 Surface Quality

- Surface finish improves with proper mold design and controlled casting conditions.
- Smooth surfaces reduce friction and improve component performance.
- Advanced casting techniques minimize the need for additional machining.

7. Analysis of Defects and Their Prevention

7.1 Defect Control

- Common defects include porosity, shrinkage, and cracks.
- Proper temperature control and mold design help in reducing these defects.
- Modern techniques use simulation tools to prevent defects and improve quality.

- ## Conclusion

  Modern casting processes significantly improve the strength, quality, and performance of manufactured components.
- Advanced techniques and proper process control are essential for achieving high productivity and efficiency.
- Continuous development in casting technology plays an important role in industrial growth and innovation.

Research Paper 3

TOPIC :- Study of Tool Wear in Machining Operations

With the advancement of modern manufacturing processes, machining operations have become more precise and efficient. However, tool wear remains a major concern that affects the performance and quality of machining processes. Tool wear occurs due to friction, heat, and mechanical stresses between the cutting tool and workpiece. It directly influences surface finish, dimensional accuracy, and tool life. In this paper, the study of tool wear in machining operations focuses on analyzing different types of tool wear, their causes, and methods to reduce wear. It is expected that this study will provide useful insights for improving machining efficiency and tool performance.

[Keywords] Tool Wear; Machining Operations; Cutting Tools; Surface Finish; Performance Analysis

1. Introduction

In terms of machining operations, cutting tools are widely used in industries such as automobile, aerospace, and manufacturing. With the increasing demand for precision and productivity, the performance of cutting tools has become highly important. Tool wear is

one of the major factors that affect machining quality and efficiency. The development of advanced machining technologies has provided better control over cutting conditions, but tool wear still remains unavoidable.

Further understanding of tool wear mechanisms helps in improving machining performance and reducing production costs. By analyzing tool wear behavior, manufacturers can optimize machining parameters and increase tool life.

Therefore, research on tool wear in machining operations has become an important topic in manufacturing engineering. In this paper, the study mainly focuses on different types of tool wear, their causes, and their impact on machining performance.

2. Study of Tool Wear in Machining Operations

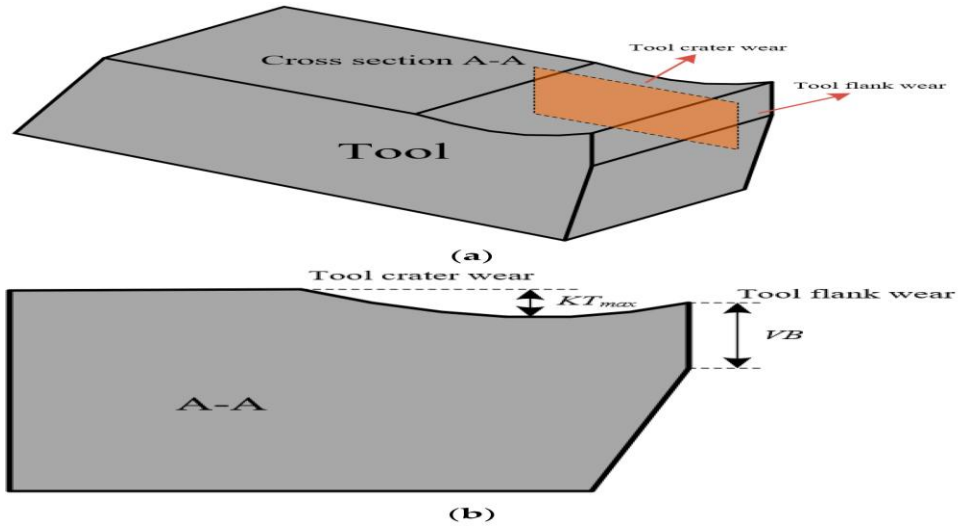

In this paper, tool wear in machining operations mainly refers to the gradual removal of material from the cutting tool during machining. This wear affects the cutting ability of the

tool and reduces machining efficiency. Tool wear is influenced by factors such as cutting speed, feed rate, temperature, and material properties.

Different machining operations such as turning, milling, and drilling experience varying levels of tool wear depending on the operating conditions. Proper understanding of tool wear helps in maintaining machining quality and performance.

3. Analysis of Types of Tool Wear

Tool wear can be classified into different types based on its location and cause.

- **Flank Wear:** Occurs on the tool surface that comes in contact with the finished workpiece. It affects surface finish and dimensional accuracy.

- **Crater Wear:** Occurs on the rake face of the tool due to high temperature and friction. It weakens the cutting edge.

- **Notch Wear:** Occurs at the boundary of the cutting area due to irregular stresses.

Each type of wear affects machining performance differently and must be controlled for better results.

4. Analysis of Causes of Tool Wear

Tool wear is caused by several factors such as friction, high temperature, and chemical reactions between the tool and workpiece material. During machining, the continuous contact between the cutting tool and workpiece generates heat, which leads to tool degradation.

Higher cutting speeds increase temperature, which accelerates wear. Similarly, improper lubrication increases friction, resulting in faster tool wear. The material properties of both tool and workpiece also play a significant role in determining wear rate.

Proper selection of machining conditions helps in minimizing tool wear and improving performance.

5. Analysis of Tool Wear Effect on Machining Performance

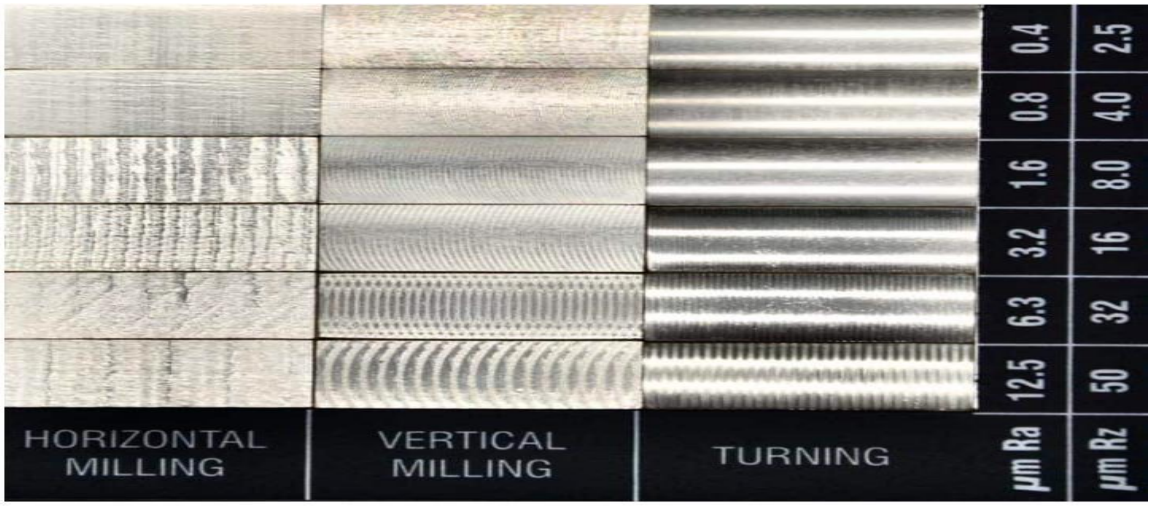

Surface roughness for CNC milling and turning compared

Tool wear has a direct impact on machining performance. As the tool wears out, cutting efficiency decreases, leading to poor surface finish and reduced dimensional accuracy. Excessive tool wear may also cause tool failure and damage to the workpiece.

According to industrial observations, worn tools increase cutting forces and vibration, which negatively affect machining stability. Tool wear also increases production time and cost due to frequent tool replacement.

Optimizing machining parameters helps in reducing the negative effects of tool wear.

6. Analysis of Methods to Reduce Tool Wear

Several methods can be used to reduce tool wear in machining operations.

Proper selection of cutting parameters such as speed, feed, and depth of cut helps in minimizing wear. The use of cutting fluids reduces heat and friction, thereby improving tool life.

Advanced tool materials such as carbide and coated tools provide better resistance to wear. Regular monitoring of tool condition also helps in timely replacement and prevents damage.

Modern machining techniques focus on improving tool performance and reducing wear for better productivity.

7. Application Analysis in Industrial Manufacturing

Tool wear analysis is widely used in industries to improve machining efficiency and product quality. In automobile industries, controlling tool wear ensures the production of high-precision components. In aerospace industries, tool wear management is critical due to the need for high accuracy and reliability.

Advanced monitoring systems are used to detect tool wear in real time, allowing timely adjustments in machining processes. This improves productivity and reduces downtime.

8. Conclusion

In summary, tool wear is an important factor that affects machining operations and overall manufacturing performance. Understanding the types, causes, and effects of tool wear helps in improving machining efficiency and reducing production costs.

Proper selection of machining parameters, use of advanced tool materials, and effective cooling techniques play a significant role in minimizing tool wear. With the advancement of technology, modern machining processes are becoming more efficient and capable of handling tool wear effectively.Continuous research and development in tool wear analysis will further improve machining performance and contribute to industrial growth.

9.Refrences

- ScienceDirect – Tool Wear in Machining
  https://www.sciencedirect.com/topics/engineering/tool-wear
- Engineering Toolbox – Cutting Tool Wear
  https://www.engineeringtoolbox.com/cutting-tools-wear-d_1445.html

- Mech4Study – Types of Tool Wear
  https://www.mech4study.com/2017/02/types-of-tool-wear.html
- Technology Student – Cutting Tools and Wear
  https://www.technologystudent.com/equip1/tool1.htm

Overall Summary of Research Paper

1. Introduction

- The paper discusses how tool wear affects the performance and efficiency of machining operations in manufacturing industries.
- Tool wear occurs due to friction, heat, and mechanical stresses between the cutting tool and the workpiece.
- Understanding tool wear is important for improving machining quality, reducing production cost, and increasing tool life.

2. Study of Tool Wear in Machining Operations

2.1 Tool Wear Process

- Tool wear refers to the gradual removal of material from the cutting tool during machining operations.
- It reduces the cutting efficiency and affects the quality of the machined component.
- Different machining processes experience different levels of tool wear depending on operating conditions.

3. Analysis of Types of Tool Wear

3.1 Types of Wear

- Flank wear occurs on the surface in contact with the finished workpiece.
- Crater wear occurs on the rake face due to high temperature and friction.
- Notch wear occurs at the boundary of the cutting zone due to irregular stresses.

4. Analysis of Causes of Tool Wear

4. Causes

- Tool wear is caused by friction, high temperature, and chemical reactions during machining.

- Higher cutting speeds and improper lubrication increase tool wear.
- Material properties of the tool and workpiece also influence wear rate.

5. Analysis of Tool Wear Effect on Machining Performance

5.1 Performance Impact

- Tool wear reduces machining efficiency and surface finish quality.
- It increases cutting forces and vibrations, leading to poor accuracy.
- Excessive wear may cause tool failure and increase production cost.

6. Analysis of Methods to Reduce Tool Wear

6.1 Wear Reduction

- Proper selection of cutting parameters reduces tool wear.
- Use of cutting fluids helps in reducing heat and friction.
- Advanced tool materials such as carbide and coated tools improve tool life.

7. Application Analysis in Industrial Manufacturing

7.1 Industrial Use

- Tool wear analysis is important in automobile, aerospace, and manufacturing industries.
- Monitoring tool wear improves production efficiency and reduces downtime.
- Advanced systems are used to detect wear and optimize machining processes.

Conclusion

Tool wear is a critical factor in machining operations that affects performance and quality.

- Proper control of machining conditions and use of advanced tools helps in reducing wear.

- Continuous improvement in machining technology ensures better efficiency and industrial growth.

Research Paper 4

TOPIC :- Analysis of Surface Finish in Grinding Process

With the advancement of precision manufacturing, grinding processes have become essential for achieving high-quality surface finish and dimensional accuracy in components. Grinding is a finishing process that removes a small amount of material using an abrasive wheel to produce smooth surfaces. The surface finish obtained in grinding operations plays a critical role in determining the performance, durability, and appearance of the component. In this paper, the study focuses on analyzing the factors affecting surface finish in grinding processes and methods to improve it. It is expected that this research will provide useful insights into enhancing grinding performance and product quality.

[Keywords] Grinding Process; Surface Finish; Abrasive Wheel; Precision Machining; Performance Analysis

1. Introduction

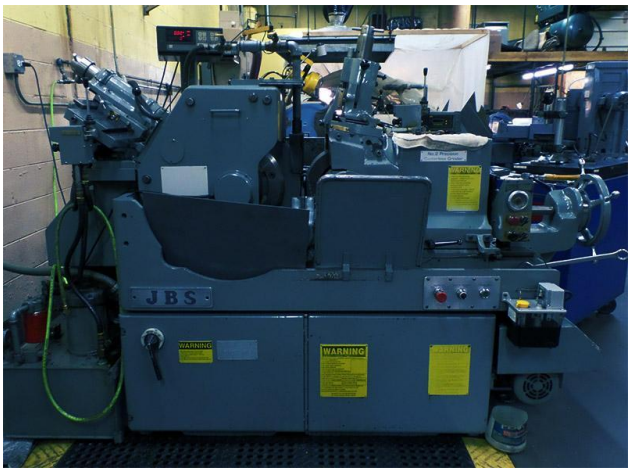

In modern manufacturing industries, grinding processes are widely used for finishing operations in automobile, aerospace, and tool-making industries. The demand for high precision and smooth surface finish has increased significantly, making grinding an important machining process. Surface finish is one of the most critical factors that determines the functionality and life of components.

With the development of advanced grinding machines and abrasive materials, it has become possible to achieve superior surface quality and tight dimensional tolerances. However, achieving the desired surface finish requires proper control of grinding parameters and operating conditions.

Therefore, research on surface finish in grinding processes is essential for improving product quality and manufacturing efficiency. In this paper, the study mainly focuses on analyzing the factors affecting surface finish and methods to optimize grinding performance.

2. Study of Grinding Process and Surface Finish

Grinding is a machining process that uses an abrasive wheel as the cutting tool to remove material from the workpiece. The abrasive particles act as small cutting edges that produce a fine surface finish.

The surface finish in grinding depends on various factors such as wheel characteristics, cutting conditions, and workpiece material. Proper grinding conditions result in smooth and high-quality surfaces, while improper conditions may lead to defects and poor surface finish.

Understanding the grinding process is important for controlling surface quality and improving machining performance.

3. Analysis of Factors Affecting Surface Finish

Process	Diagram of resulting surface	Height of micro irregularity (μm)
Precision Turning		1.25-12.50
Grinding	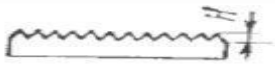	0.90-5.00
Honing		0.13-1.25
Lapping	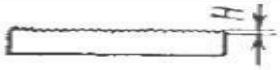	0.08-0.25
Super Finishing	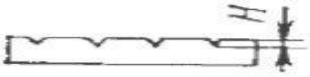	0.01-0.25

Surface finish in grinding operations is influenced by several factors including grinding speed, feed rate, depth of cut, and abrasive grain size.

Higher grinding speeds generally produce smoother surfaces, while higher feed rates may increase surface roughness. The size and type of abrasive grains also affect the surface finish, as finer grains produce smoother surfaces compared to coarse grains.

The condition of the grinding wheel also plays an important role. A properly dressed wheel ensures better cutting action and improved surface finish. Proper selection of grinding parameters is necessary to achieve desired results.

4. Analysis of Grinding Wheel Characteristics

The characteristics of the grinding wheel significantly affect the surface finish of the workpiece. Important factors include abrasive material, grain size, bond type, and wheel hardness.

Different abrasive materials such as aluminum oxide and silicon carbide are used for grinding different materials. Fine grain wheels are used for finishing operations, while coarse grain wheels are used for rough grinding.

The bonding material holds the abrasive grains together and determines the strength and wear resistance of the wheel. Proper selection of grinding wheel characteristics helps in achieving better surface quality.

5. Analysis of Surface Defects in Grinding

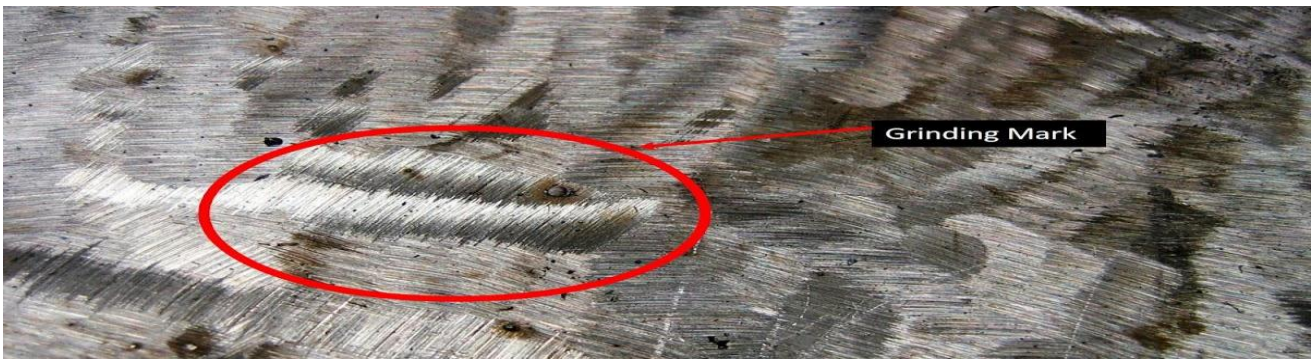

Surface defects such as burns, cracks, and irregular marks can occur during grinding operations. These defects are mainly caused by excessive heat, improper grinding conditions, and wheel wear.

Grinding burns occur due to high temperature, which affects the material properties of the workpiece. Cracks may develop due to thermal stress, while uneven grinding may lead to poor surface finish.

These defects can be minimized by controlling grinding parameters, using proper cooling methods, and maintaining the grinding wheel condition.

6. Analysis of Methods to Improve Surface Finish

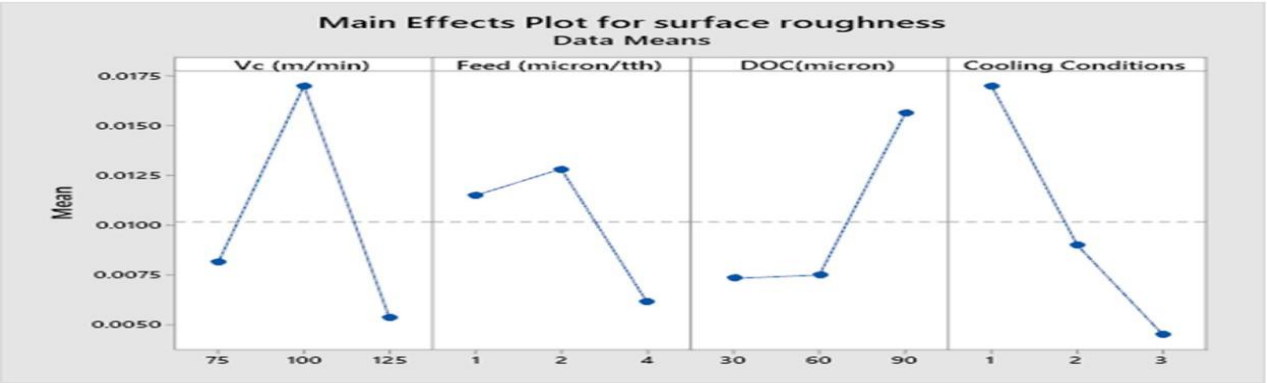

Several methods can be used to improve surface finish in grinding processes.

Proper selection of grinding parameters such as speed, feed, and depth of cut helps in achieving better results. The use of coolant reduces heat generation and improves surface quality.

Regular dressing of the grinding wheel ensures sharp cutting edges and consistent performance. Advanced grinding techniques and precision machines also contribute to improved surface finish.

7. Application Analysis in Industrial Manufacturing

Grinding processes are widely used in industries for finishing operations of components such as shafts, gears, and bearings. High-quality surface finish is essential for reducing friction, improving wear resistance, and increasing component life.

In automobile and aerospace industries, grinding is used to achieve precise dimensions and smooth surfaces required for critical components. The use of advanced grinding technologies has improved productivity and product quality.

8. Conclusion

In summary, surface finish is a critical factor in grinding processes that directly affects the performance and durability of components. Proper selection of grinding parameters, wheel characteristics, and operating conditions is essential for achieving high-quality surfaces.

The use of advanced grinding techniques and cooling methods helps in reducing defects and improving machining performance. Continuous research and development in grinding processes will further enhance manufacturing efficiency and product quality.

References

1. ScienceDirect – Grinding Process
   https://www.sciencedirect.com/topics/engineering/grinding-process
2. Engineering Toolbox – Surface Finish
   https://www.engineeringtoolbox.com/surface-roughness-d_1780.html
3. Mech4Study – Grinding Machine and Process
   https://www.mech4study.com/2017/01/grinding-machine.html
4. Technology Student – Grinding Introduction
   https://www.technologystudent.com/equip1/grind1.htm

Overall Summary of Research Paper

1. Introduction

- The paper discusses how grinding processes are used to achieve high surface finish and dimensional accuracy in manufacturing industries.
- Grinding is a finishing process that removes small amounts of material using abrasive wheels to produce smooth surfaces.
- High-quality surface finish is important for improving performance, durability, and appearance of components.

2. Study of Grinding Process and Surface Finish

2.1 Grinding Process

- Grinding involves the use of abrasive particles that act as cutting edges to remove material from the workpiece.
- The process produces fine surface finish and precise dimensions.
- Proper grinding conditions improve machining performance and product quality.

3. Analysis of Factors Affecting Surface Finish

3.1 Influencing Factors

- Surface finish depends on grinding speed, feed rate, depth of cut, and abrasive grain size.
- Higher speed improves surface finish, while higher feed rate increases roughness.
- Grinding wheel condition also affects the quality of the surface.

4. Analysis of Grinding Wheel Characteristics

4.1 Wheel Properties

- Grinding wheel characteristics such as abrasive material, grain size, and bonding type influence surface finish.
- Fine grains produce smoother surfaces, while coarse grains are used for rough grinding.
- Proper selection of wheel improves performance and efficiency.

5. Analysis of Surface Defects in Grinding

5.1 Surface Defects

- Common defects include burns, cracks, and irregular surface marks.
- These defects occur due to excessive heat, improper parameters, and wheel wear.
- Proper control of grinding conditions helps in reducing these defects.

6. Analysis of Methods to Improve Surface Finish

6.1 Improvement Methods

- Proper selection of grinding parameters improves surface finish.
- Use of coolant reduces heat and enhances surface quality.
- Regular dressing of grinding wheel ensures consistent performance.

7. Application Analysis in Industrial Manufacturing

7.1 Industrial Applications

- Grinding is widely used in automobile, aerospace, and tool manufacturing industries.
- It is used for finishing components such as shafts, gears, and bearings.
- Advanced grinding techniques improve productivity and quality.

- # Conclusion

  Surface finish is a critical factor in grinding processes that affects performance and durability of components.
- Proper control of parameters and use of advanced techniques improves machining efficiency.
- Continuous development in grinding technology supports industrial growth and innovation.

Research Paper 5

TOPIC :- Optimization of Drilling Parameters in Metal Cutting

With the advancement of modern manufacturing processes, drilling operations have become essential for producing precise holes in metal components. The performance of drilling processes depends on various parameters such as cutting speed, feed rate, and drill material. Optimization of these parameters is necessary to improve surface finish, reduce tool wear, and increase productivity. Improper drilling conditions may lead to poor hole quality, increased tool wear, and higher production cost. In this paper, the study focuses on analyzing drilling parameters and their optimization to achieve better machining performance. It is expected that this research will provide useful insights into improving drilling efficiency and quality.

[Keywords] Drilling Process; Cutting Parameters; Optimization; Tool Wear; Surface Finish

1. Introduction

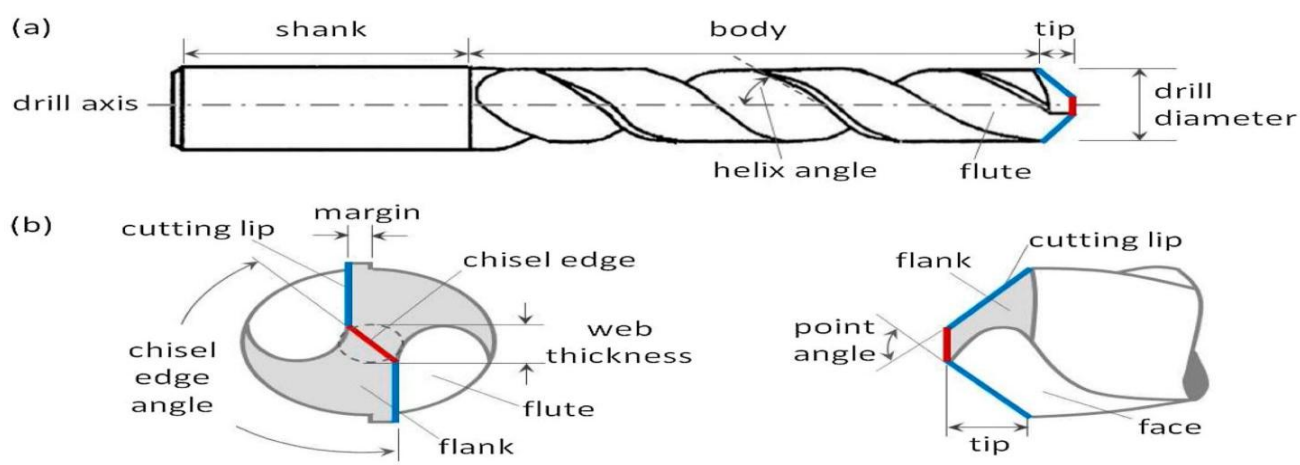

Drilling is one of the most commonly used machining processes in manufacturing industries such as automobile, aerospace, and construction. It is used to produce holes in metal components with required size and accuracy. The quality of drilled holes depends on proper selection of drilling parameters.

With increasing demand for precision and productivity, optimization of drilling parameters has become important. Improper selection of parameters can lead to defects such as poor surface finish, burr formation, and dimensional errors.

Therefore, research on optimization of drilling parameters is essential for improving machining performance and reducing production cost. This paper focuses on analyzing the effect of drilling parameters and methods to optimize them.

2. Study of Drilling Process in Metal Cutting

Drilling is a machining process in which a rotating drill bit is used to create holes in a workpiece. The cutting action occurs at the cutting edges of the drill, which remove material in the form of chips.

The drilling process depends on factors such as drill geometry, cutting speed, feed rate, and material properties. Proper control of these factors ensures efficient drilling and high-quality hole production.

3. Analysis of Drilling Parameters

① Calculation of cutting speed

$$VC = \frac{n \times DC \times n}{1{,}000}$$

② Calculation of rotational speed

$$n = \frac{1{,}000 \times VC}{n \times DC}$$

③ Calculation of feed speed per minute (1)

$$Vf = n \times f$$

④ Calculation of feed rate per revolution

$$f = \frac{Vf}{n}$$

⑤ Calculation of drilling time

$$T = \frac{H}{Vf}$$

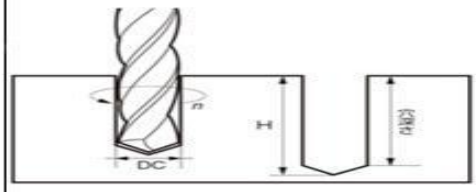

Drilling performance is mainly influenced by three parameters: cutting speed, feed rate, and depth of cut.

Cutting speed determines the rate at which the drill rotates. Higher cutting speeds increase productivity but may cause excessive heat and tool wear. Feed rate controls the movement of the drill into the workpiece and affects chip formation and surface finish.

Depth of cut determines the amount of material removed in one pass. Proper selection of these parameters is essential for achieving optimal performance.

4. Analysis of Effect of Parameters on Performance

Drilling parameters have a direct impact on machining performance. Higher cutting speeds may reduce machining time but can increase tool wear and temperature. Higher feed rates increase material removal rate but may reduce surface quality.

According to experimental observations, optimized parameters improve surface finish, reduce tool wear, and increase productivity. Proper balance between speed and feed is necessary to achieve the best results.

5. Analysis of Tool Wear and Hole Quality

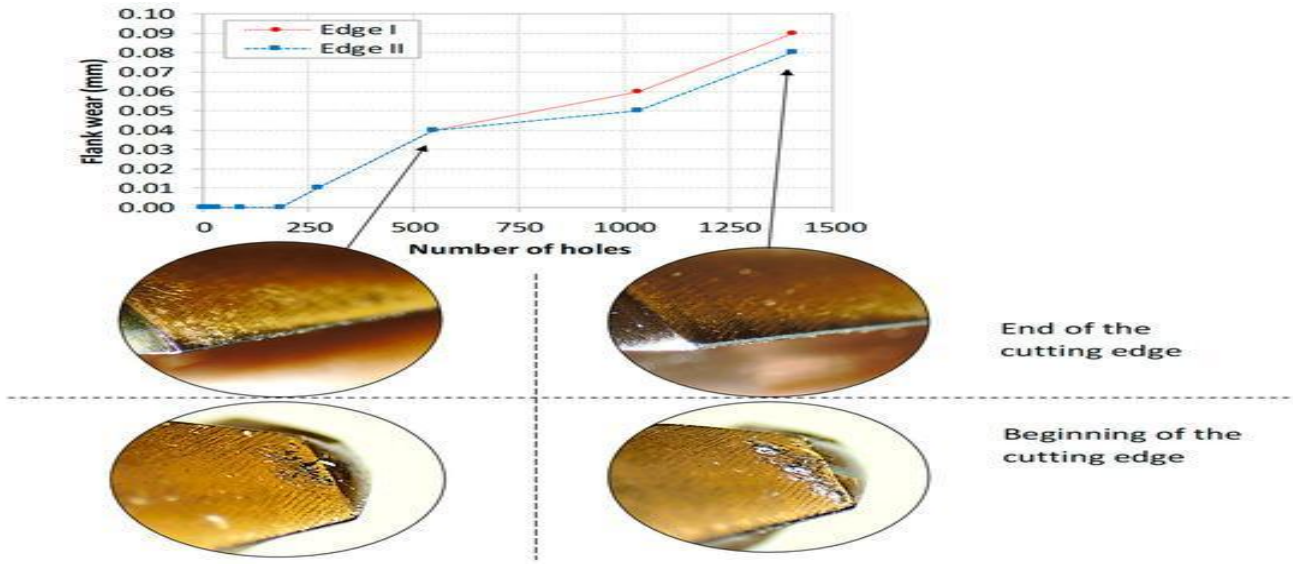

Tool wear is an important factor in drilling operations. Excessive tool wear leads to poor hole quality, increased roughness, and dimensional errors.

Hole quality is affected by factors such as vibration, cutting conditions, and tool condition. Proper selection of parameters and use of suitable drill materials help in maintaining hole quality and reducing wear.

6. Analysis of Optimization Techniques

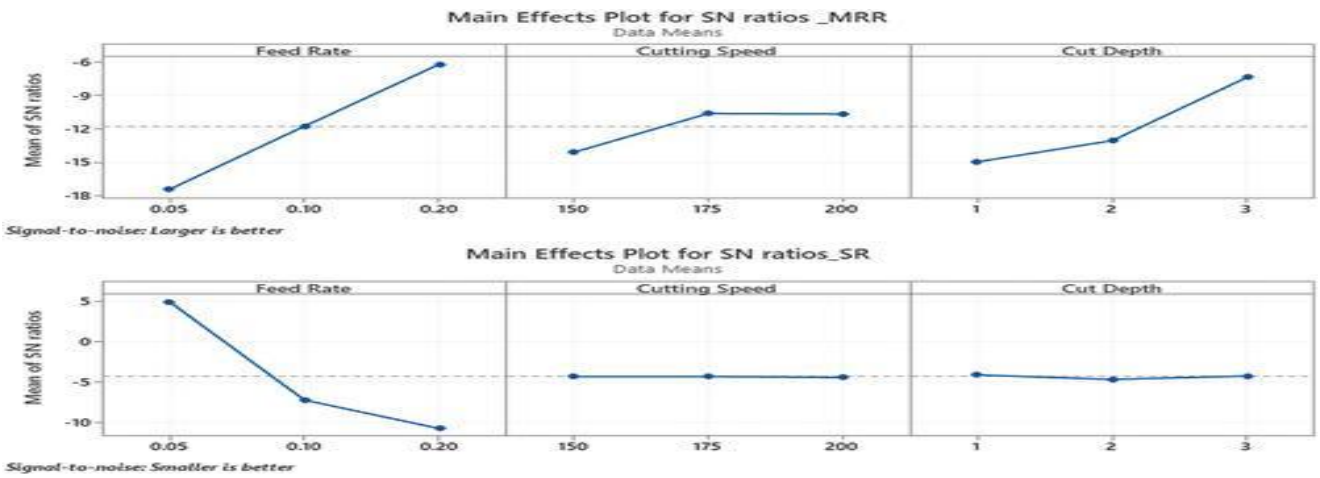

Optimization of drilling parameters can be achieved using various techniques such as trial and error, statistical methods, and computer-based simulations.

Modern methods such as Taguchi method and response surface methodology are used to determine the optimal combination of parameters. These methods help in improving efficiency and reducing experimentation time.

7. Application Analysis in Industrial Manufacturing

Drilling operations are widely used in industries for manufacturing components such as engine parts, structural components, and machine elements.

Optimized drilling parameters improve productivity, reduce tool wear, and ensure consistent quality. In industries such as aerospace and automobile, high precision drilling is essential for maintaining safety and performance standards.

8. Conclusion

In summary, optimization of drilling parameters is essential for improving machining performance and product quality. Proper selection of cutting speed, feed rate, and depth of cut helps in achieving better surface finish and reducing tool wear.

The use of advanced optimization techniques and modern machining tools further enhances efficiency and productivity. Continuous research in drilling processes will contribute to improved manufacturing performance and industrial growth.

References

1. ScienceDirect – Drilling Process in Machining
   https://www.sciencedirect.com/topics/engineering/drilling
2. Engineering Toolbox – Metal Cutting Parameters
   https://www.engineeringtoolbox.com/metal-cutting-d_949.html
3. Mech4Study – Drilling Machine and Process
   https://www.mech4study.com/2017/01/drilling-machine.html
4. Technology Student – Drilling Introduction
   https://www.technologystudent.com/equip1/drill1.htm

Overall Summary of Research Paper

1. Introduction

- The paper discusses how drilling parameters affect the performance and quality of machining operations in metal cutting industries.
- Drilling is widely used to produce holes in components with required accuracy and surface finish.
- Optimization of drilling parameters is important for improving productivity and reducing tool wear.

2. Study of Drilling Process in Metal Cutting

2.1 Drilling Process

- Drilling involves the use of a rotating drill bit to remove material from the workpiece.
- The cutting action produces chips and creates holes with required dimensions.
- Proper control of drilling conditions improves efficiency and accuracy.

3. Analysis of Drilling Parameters

3.1 Parameters

- Cutting speed, feed rate, and depth of cut are the main parameters affecting drilling performance.
- These parameters influence surface finish, tool wear, and machining efficiency.
- Proper selection of parameters ensures better machining quality.

4. Analysis of Effect of Parameters on Performance

4.1 Performance Impact

- Higher cutting speed increases productivity but may increase tool wear and temperature.
- Higher feed rate increases material removal but reduces surface quality.
- Optimized parameters improve performance and reduce machining defects.

5. Analysis of Tool Wear and Hole Quality

5.1 Tool Wear

- Tool wear affects the accuracy and surface finish of drilled holes.
- Excessive wear leads to poor hole quality and dimensional errors.

- Proper machining conditions help in maintaining tool life and performance.

6. Analysis of Optimization Techniques

6.1 Optimization Methods

- Techniques such as Taguchi method and response surface methodology are used to optimize drilling parameters.
- These methods help in determining the best combination of parameters.
- Optimization improves efficiency and reduces experimentation time.

7. Application Analysis in Industrial Manufacturing

7.1 Industrial Applications

- Drilling is widely used in automobile, aerospace, and manufacturing industries.
- Optimized drilling improves productivity and ensures consistent quality.
- Advanced CNC drilling machines enhance precision and efficiency.

Conclusion

Optimization of drilling parameters significantly improves machining performance and product quality.

- Proper control of cutting conditions helps in reducing tool wear and improving efficiency.
- Continuous improvement in drilling technology supports industrial development and innovation.