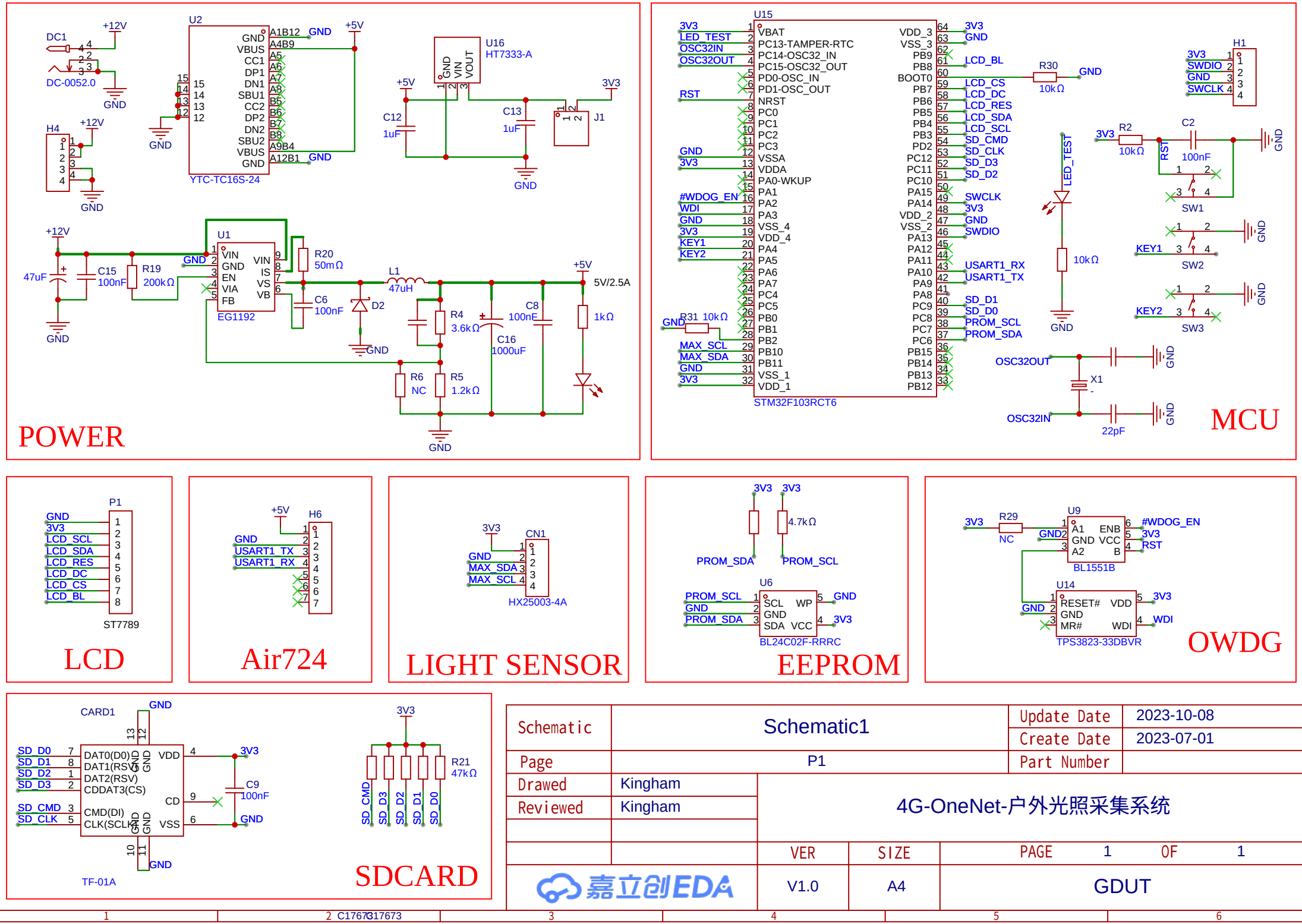
POWER
DC1
DC-0052.0
+12V
GND
H4
U2
YTC-TC16S-24
A1B12
A4B9
A9B4
A12B1
VBUS
CC1
DP1
DN1
SBU1
CC2
DP2
DN2
SBU2
+5V
U16
HT7333-A
VIN
VOUT
C12
1uF
C13
1uF
3V3
J1
U1
EG1192
VIN
EN
VIA
FB
IS
VS
VB
47uF
C15
100nF
R19
200kΩ
R20
50mΩ
C6
100nF
D2
L1
47uH
R4
3.6kΩ
C16
1000uF
C8
100nF
1kΩ
5V/2.5A
R6
NC
R5
1.2kΩ
MCU
U15
STM32F103RCT6
VBAT
PC13-TAMPER-RTC
PC14-OSC32_IN
PC15-OSC32_OUT
PD0-OSC_IN
PD1-OSC_OUT
NRST
PC0
PC1
PC2
PC3
VSSA
VDDA
PA0-WKUP
PA1
PA2
PA3
VSS_4
VDD_4
PA4
PA5
PA6
PA7
PC4
PC5
PB0
PB1
PB2
PB10
PB11
VSS_1
VDD_1
VDD_3
VSS_3
PB9
PB8
BOOT0
PB7
PB6
PB5
PB4
PB3
PD2
PC12
PC11
PC10
PA15
PA14
VDD_2
VSS_2
PA13
PA12
PA11
PA10
PA9
PA8
PC9
PC8
PC7
PC6
PB15
PB14
PB13
PB12
3V3
LED_TEST
OSC32IN
OSC32OUT
RST
GND
#WDOG_EN
WDI
KEY1
KEY2
MAX_SCL
MAX_SDA
LCD_BL
LCD_CS
LCD_DC
LCD_RES
LCD_SDA
LCD_SCL
SD_CMD
SD_CLK
SD_D3
SD_D2
SWCLK
SWDIO
USART1_RX
USART1_TX
SD_D1
SD_D0
PROM_SCL
PROM_SDA
R30
10kΩ
R31
10kΩ
H1
R2
10kΩ
C2
100nF
SW1
SW2
SW3
X1
22pF
LCD
P1
ST7789
Air724
H6
CN1
HX25003-4A
LIGHT SENSOR
EEPROM
U6
BL24C02F-RRRC
4.7kΩ
OWDG
U9
BL1551B
R29
NC
U14
TPS3823-33DBVR
RESET#
MR#
SDCARD
CARD1
TF-01A
DAT0(D0)
DAT1(RSV)
DAT2(RSV)
CDDAT3(CS)
CMD(DI)
CLK(SCLK)
VDD
VSS
CD
C9
100nF
R21
47kΩ
Schematic
Schematic1
Update Date
2023-10-08
Create Date
2023-07-01
Page
P1
Part Number
Drawed
Kingham
Reviewed
Kingham
4G-OneNet-户外光照采集系统
VER
SIZE
PAGE 1 OF 1
V1.0
A4
GDUT
嘉立创EDA
C17673
C28323