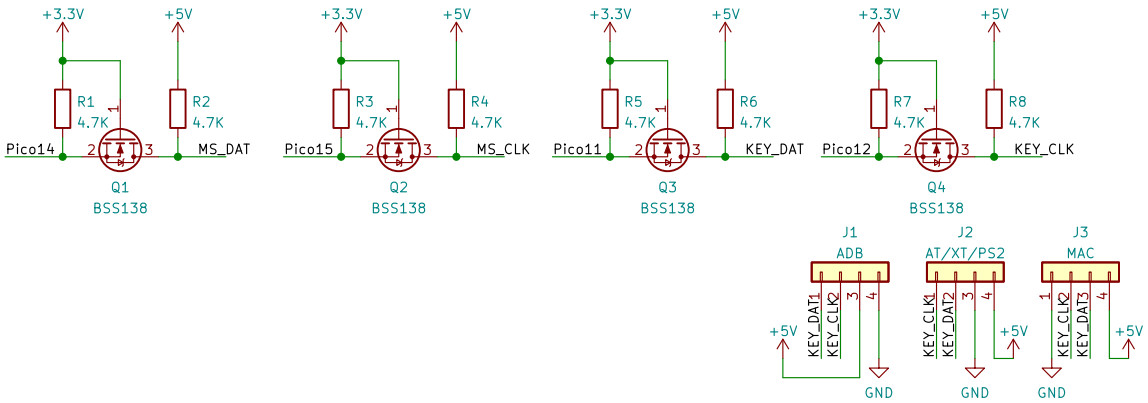

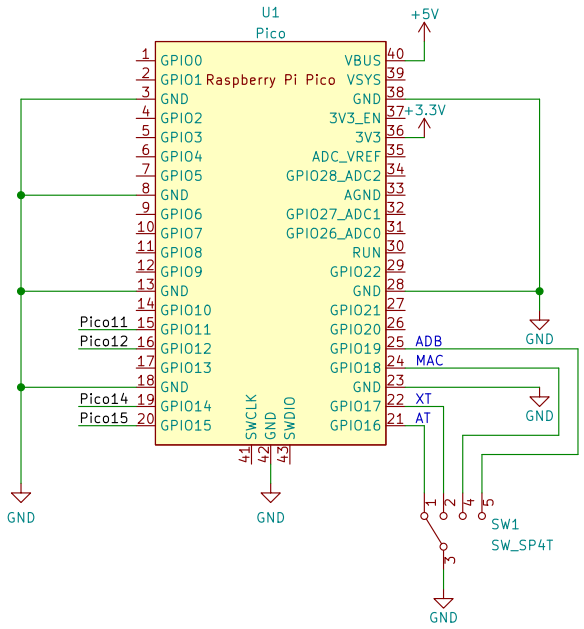

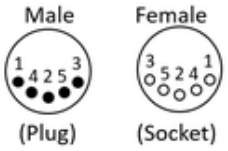

5-pin DIN (AT/XT):

1 – Clock
2 – Data
3 – Not Implemented
4 – Ground
5 – Vcc (+5V)

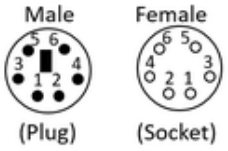

5-pin Mini-DIN (PS/2):

1 – Data
2 – Not Implemented
3 – Ground
4 – Vcc (+5V)
5 – Clock
6 – Not Implemented

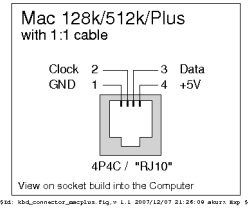

ADB CONNECTOR PINS

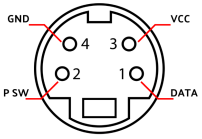

Sheet: /
File: AT2XTKB.kicad_sch

Title:

Size: A4	Date:	Rev:
KiCad E.D.A. kicad (6.0.1)		Id: 1/1