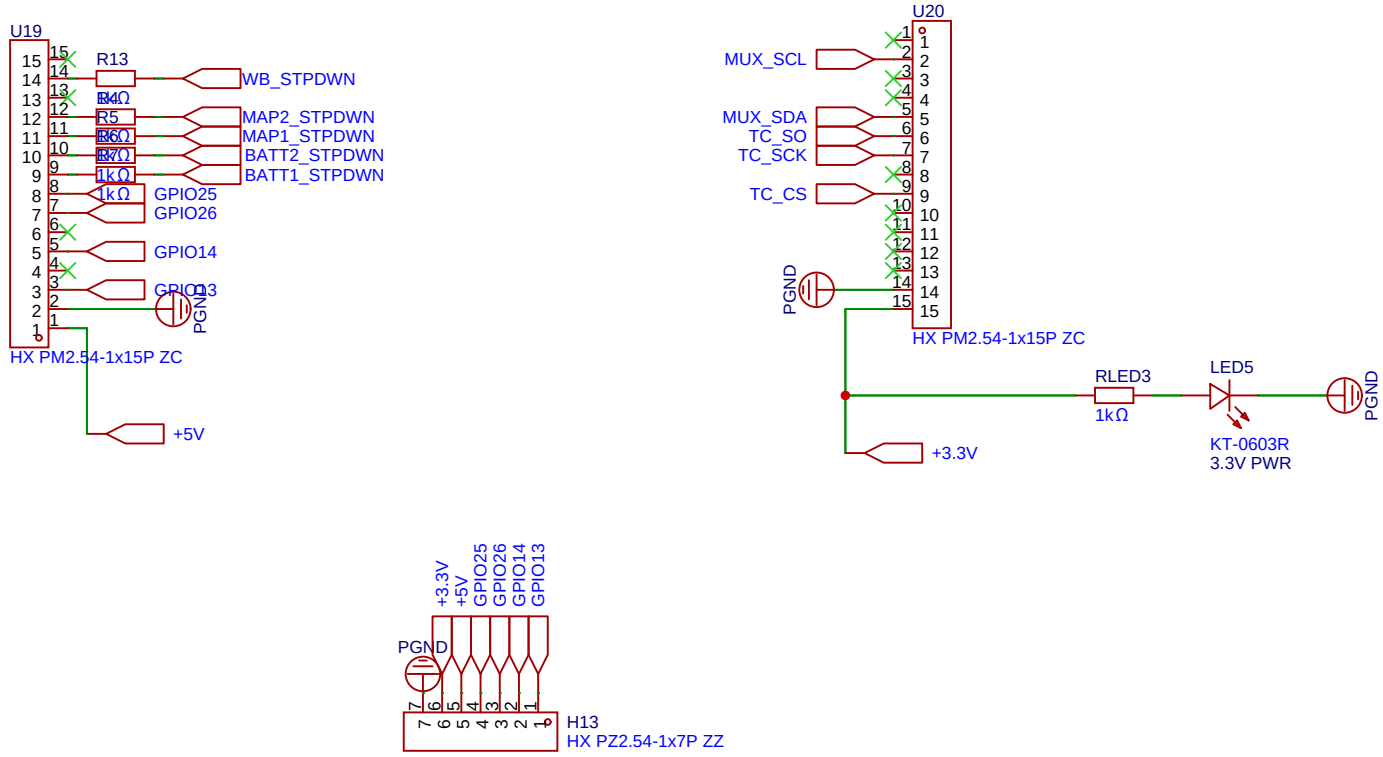

Schematic	Schematic2	Create at	2026-03-27
		Update at	2026-03-30
Board	Updated_PCB	Page	ESP32 + Headers
Drawn		Pajero Gauges Current V2	
Reviewed			
		Version	Size	Page 1 Total 7
EasyEDA		V1.0	A4	EasyEDA.com

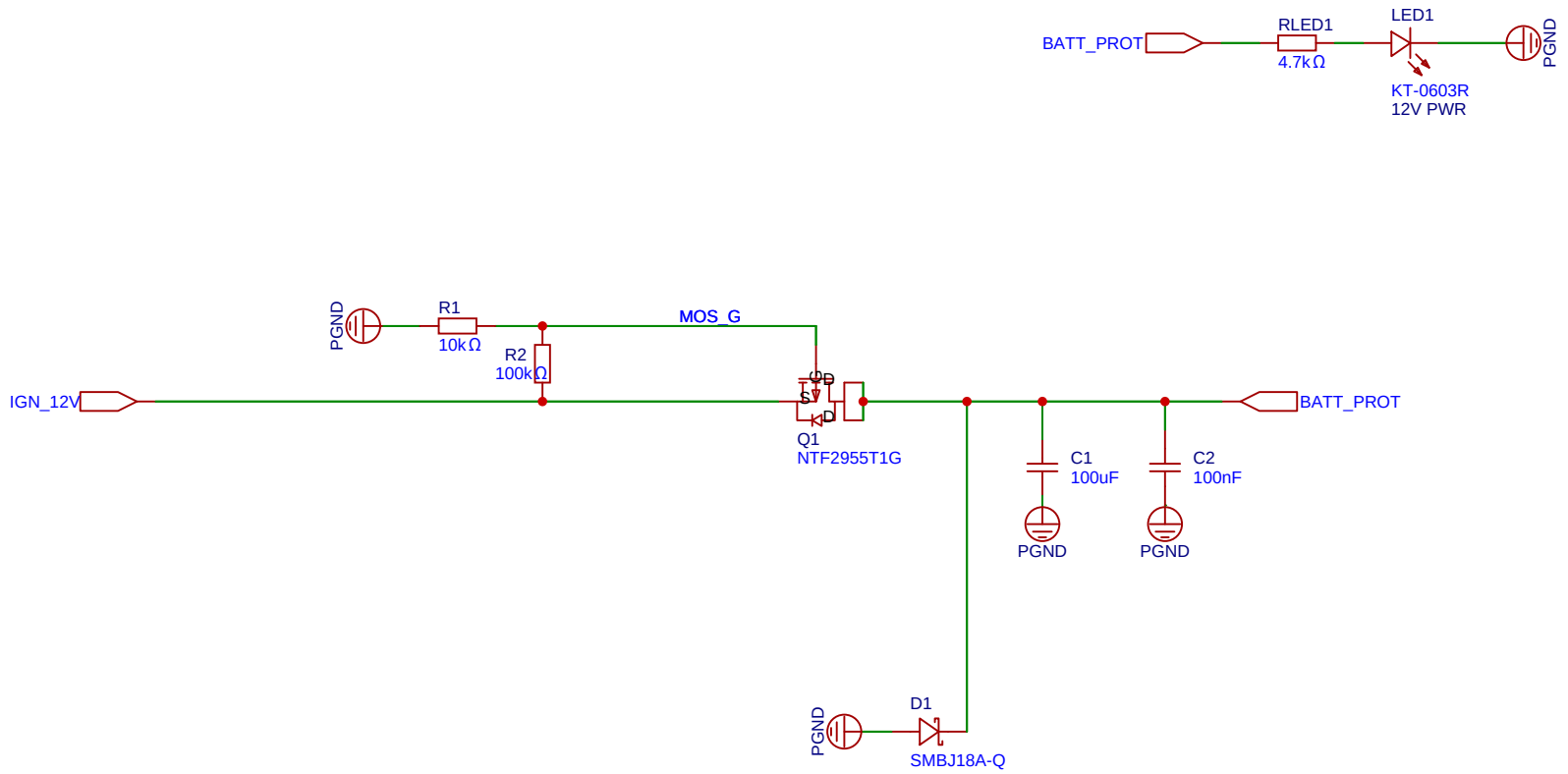

Schematic	Schematic2	Create at	2026-03-27
		Update at	2026-03-29
Board	Updated_PCB	Page	12V Input
Drawn		Pajero Gauges Current V2	
Reviewed			
		Version	Size	Page 2 Total 7
EasyEDA		V1.0	A4	EasyEDA.com

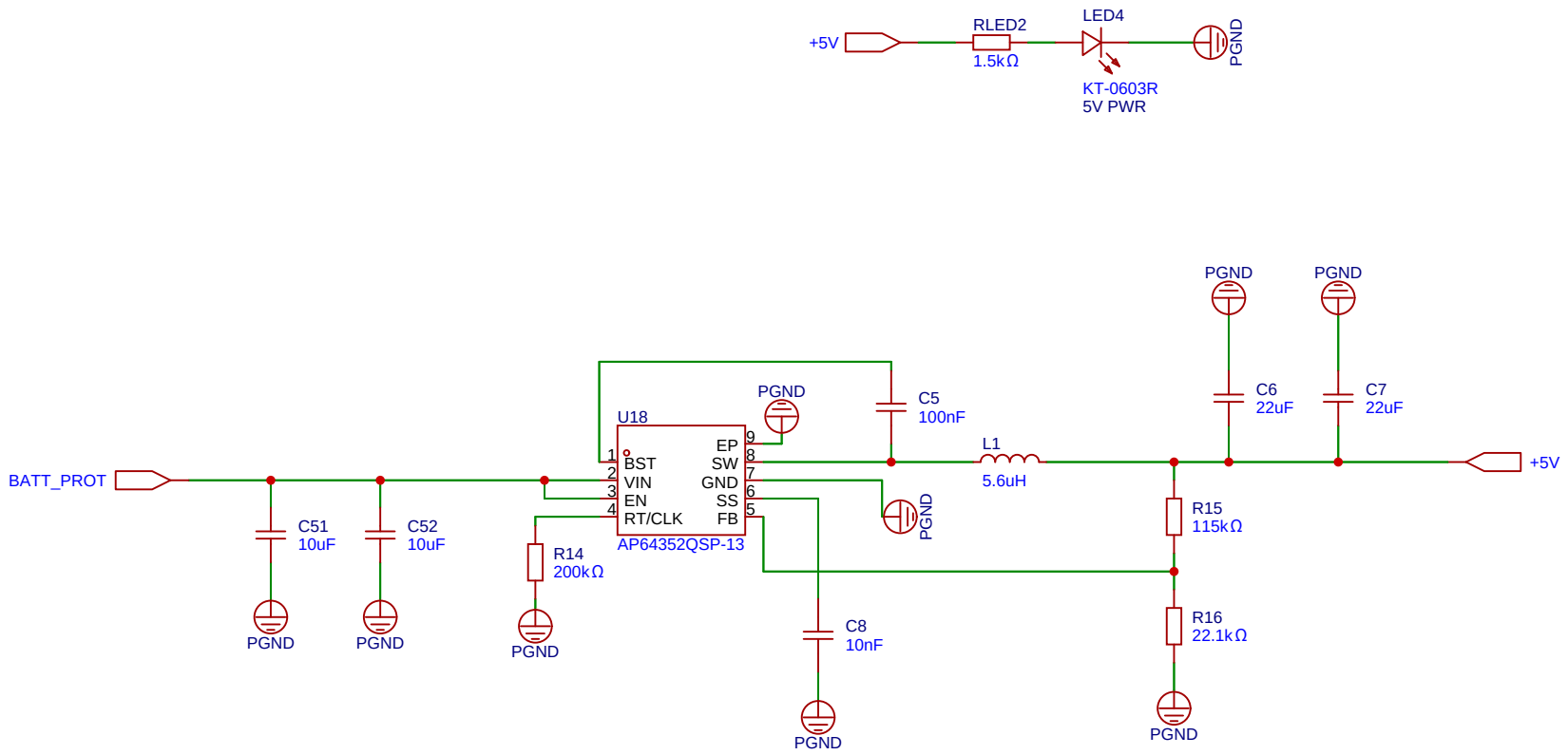

Schematic	Schematic2	Create at	2026-03-27
		Update at	2026-03-29
Board	Updated_PCB	Page	5V Buck
Drawn		Pajero Gauges Current V2	
Reviewed			
		Version	Size	Page 3 Total 7
EasyEDA		V1.0	A4	EasyEDA.com

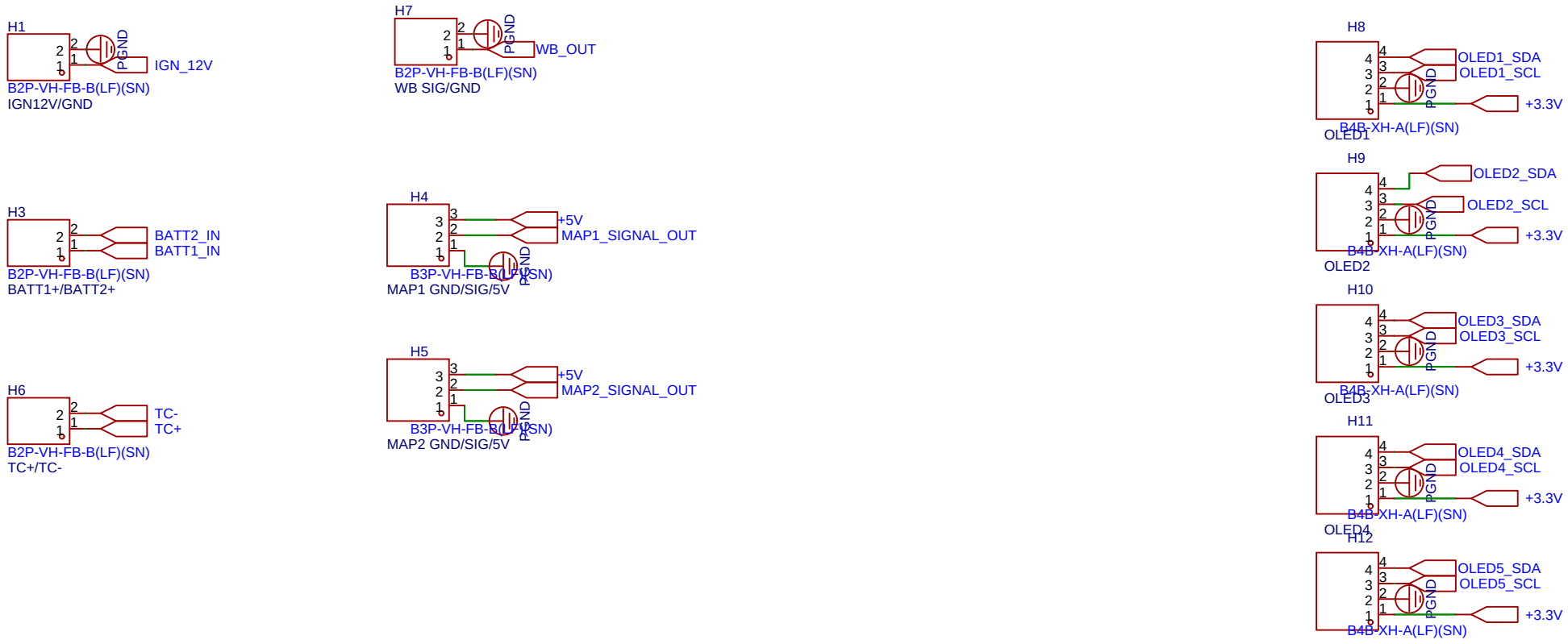

Schematic	Schematic2	Create at	2026-03-27
		Update at	2026-03-29
Board	Updated_PCB	Page	Board Connections
Drawn		Pajero Gauges Current V2	
Reviewed			
		Version	Size	Page 4 Total 7
EasyEDA		V1.0	A4	EasyEDA.com

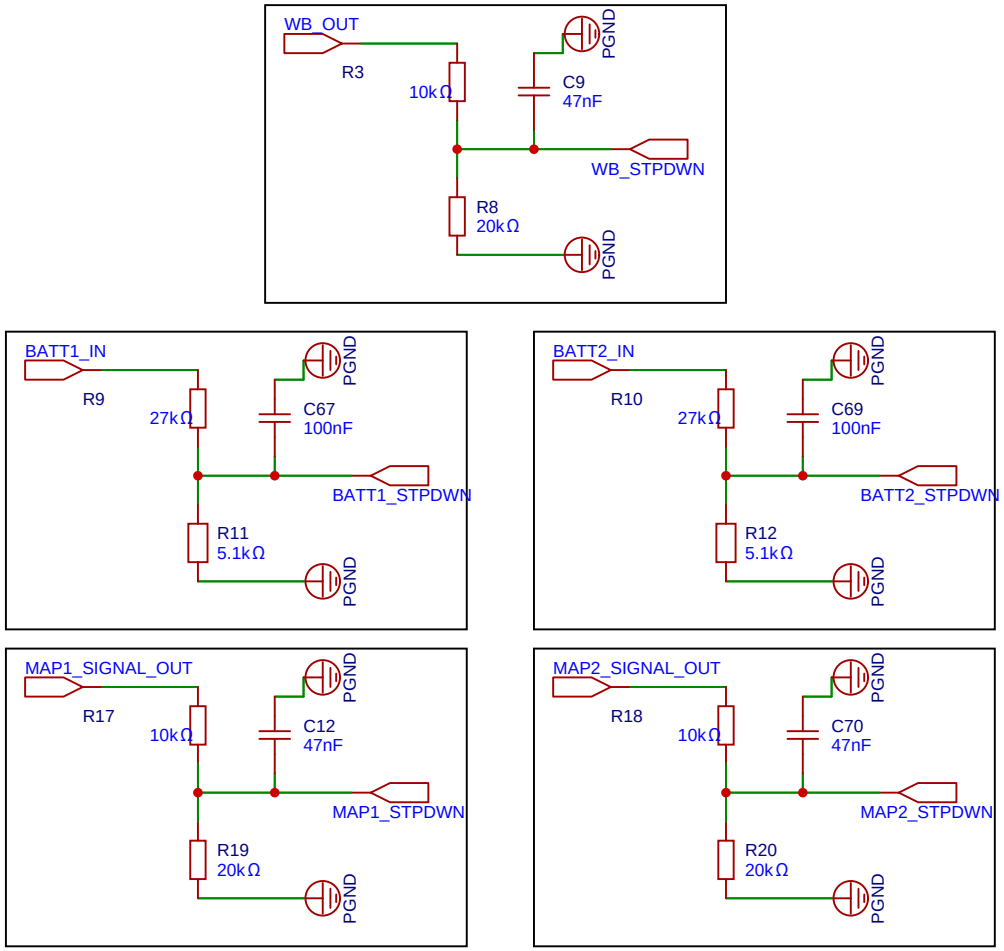

Schematic	Schematic2	Create at	2026-03-27
		Update at	2026-03-29
Board	Updated_PCB	Page	Voltage Dividers
Drawn		Pajero Gauges Current V2	
Reviewed			
		Version	Size	Page 5 Total 7
EasyEDA		V1.0	A4	EasyEDA.com

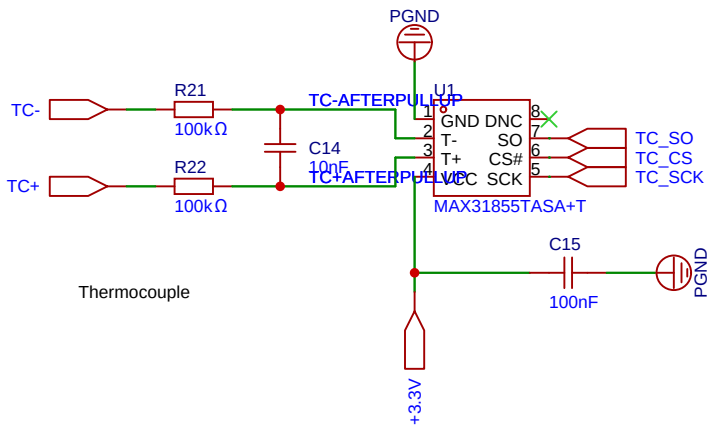

Schematic	Schematic2	Create at	2026-03-27
		Update at	2026-03-29
Board	Updated_PCB	Page	Thermocouple
Drawn		Pajero Gauges Current V2	
Reviewed			
		Version	Size	Page 6 Total 7
EasyEDA		V1.0	A4	EasyEDA.com

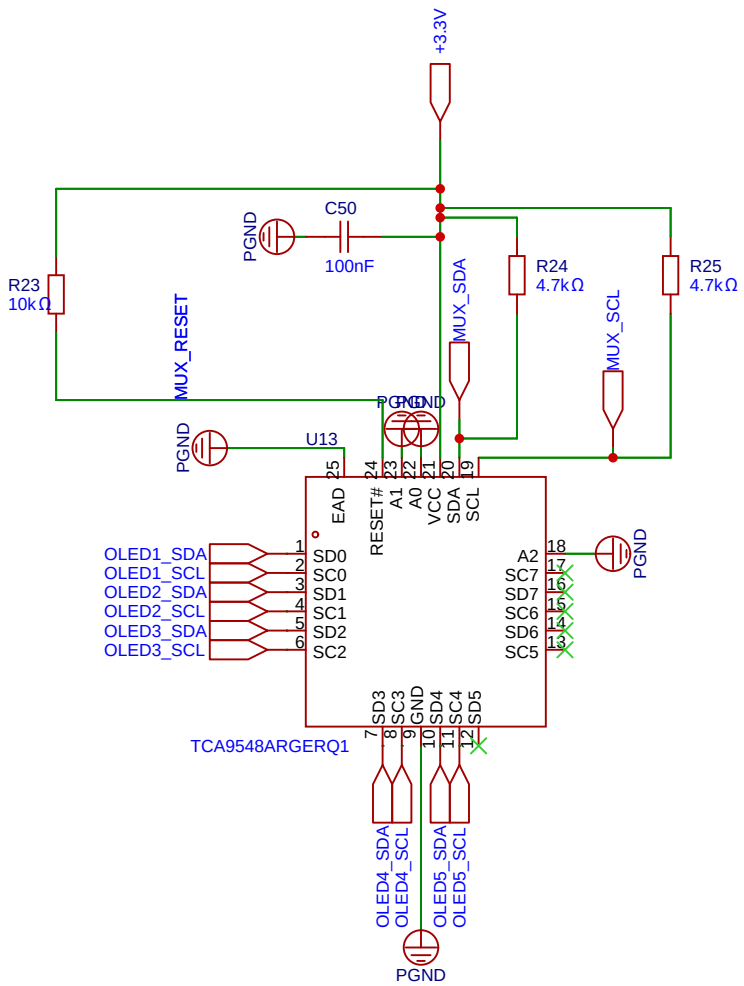

Schematic	Schematic2	Create at	2026-03-27
		Update at	2026-03-29
Board	Updated_PCB	Page	Mux
Drawn		Pajero Gauges Current V2	
Reviewed			
		Version	Size	Page 7 Total 7
EasyEDA		V1.0	A4	EasyEDA.com