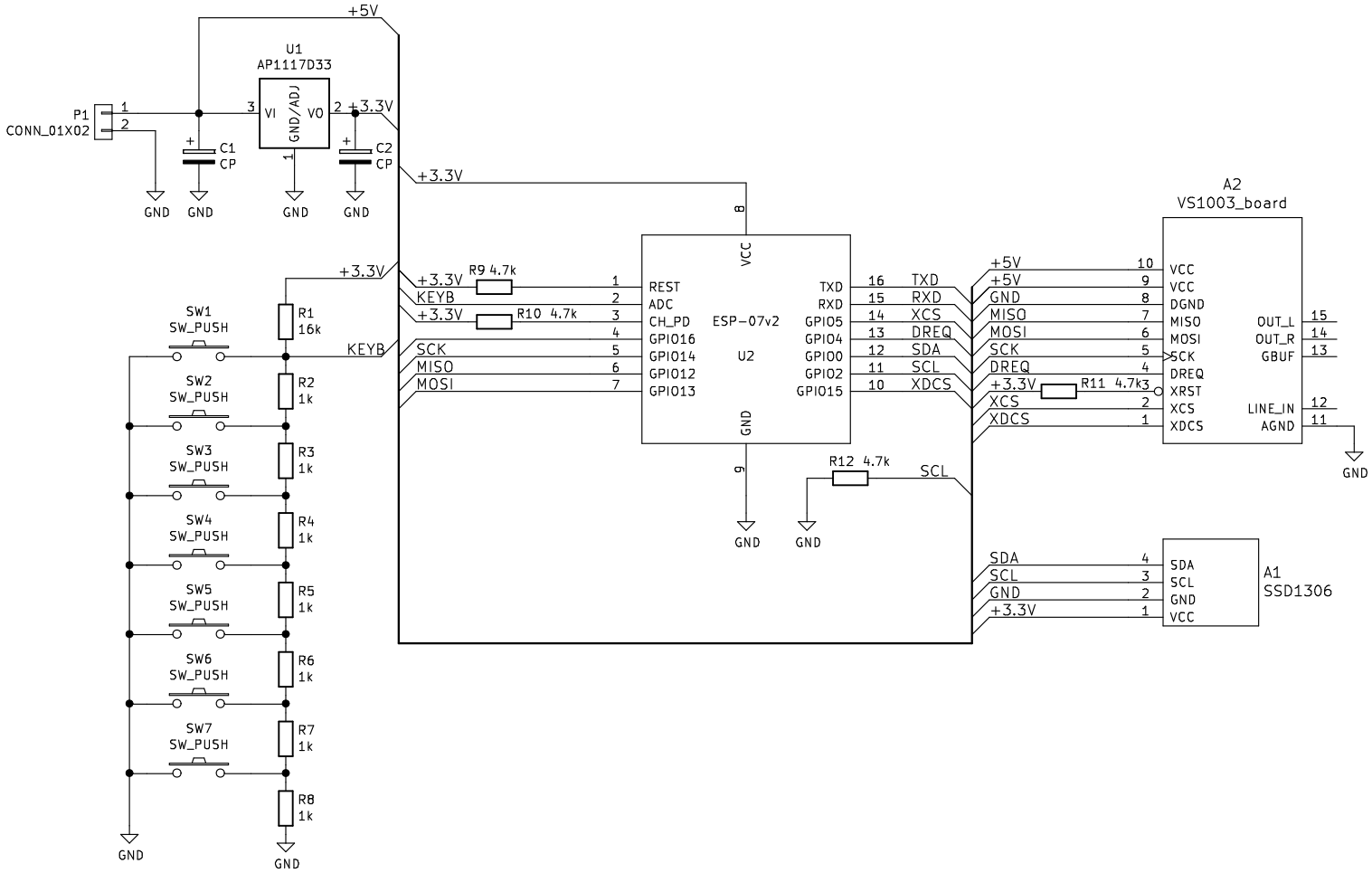

Sheet: /
File: esp8266_mp3.sch

Title:

Size: A4	Date:	Rev:
KiCad E.D.A. kicad 0.201602050916+653842ubuntu15.10.1-product		Id: 1/1