24-Bit Analog-to-Digital Converter (ADC) for Weigh Scales

DESCRIPTION

Based on Avia Semiconductor's patented technology, HX711 is a precision 24-bit analog-to-digital converter (ADC) designed for weigh scales and industrial control applications to interface directly with a bridge sensor.

The input multiplexer selects either Channel A or B differential input to the low-noise programmable gain amplifier (PGA). Channel A can be programmed with a gain of 128 or 64, corresponding to a full-scale differential input voltage of ±20mV or ±40mV respectively, when a 5V supply is connected to AVDD analog power supply pin. Channel B has a fixed gain of 32. On-chip power supply regulator eliminates the need for an external supply regulator to provide analog power for the ADC and the sensor. Clock input is flexible. It can be from an external clock source, a crystal, or the on-chip oscillator that does not require any external component. On-chip power-on-reset circuitry simplifies digital interface initialization.

There is no programming needed for the internal registers. All controls to the HX711 are through the pins.

FEATURES

- **Two selectable differential input channels**
- **On-chip active low noise PGA with selectable gain of 32, 64 and 128**
- **On-chip power supply regulator for load-cell and ADC analog power supply**
- **On-chip oscillator requiring no external component with optional external crystal**
- **On-chip power-on-reset**
- **Simple digital control and serial interface: pin-driven controls, no programming needed**
- **Selectable 10SPS or 80SPS output data rate**
- **Simultaneous 50 and 60Hz supply rejection**
- **Current consumption including on-chip analog power supply regulator: normal operation < 1.5mA, power down < 1uA**
- **Operation supply voltage range: 2.6 ~ 5.5V**
- **Operation temperature range: -40 ~ +85℃**
- **16 pin SOP-16 package**

APPLICATIONS

- **Weigh Scales**
- **Industrial Process Control**

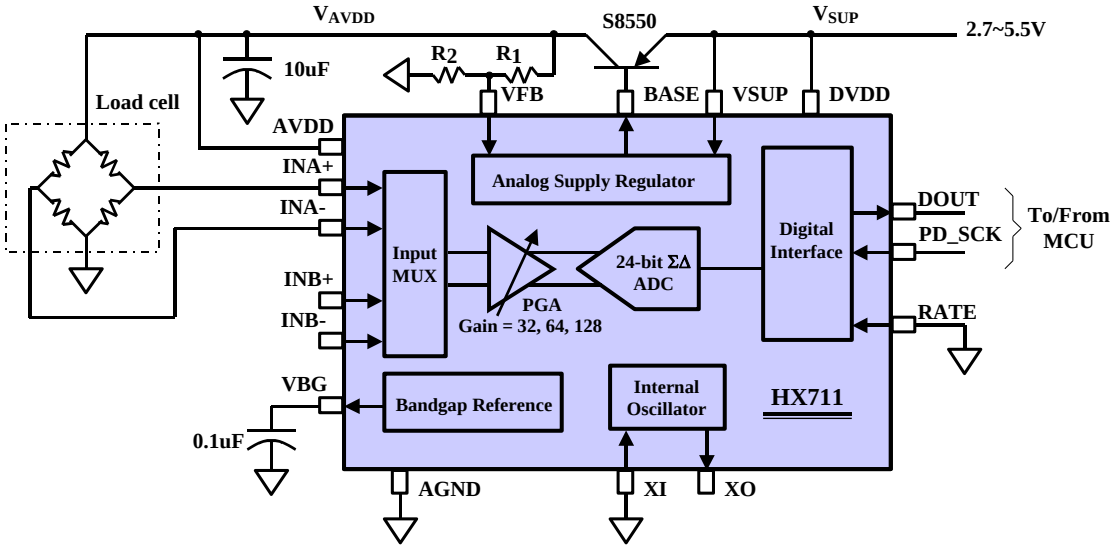

Fig. 1 Typical weigh scale application block diagram

Pin Description

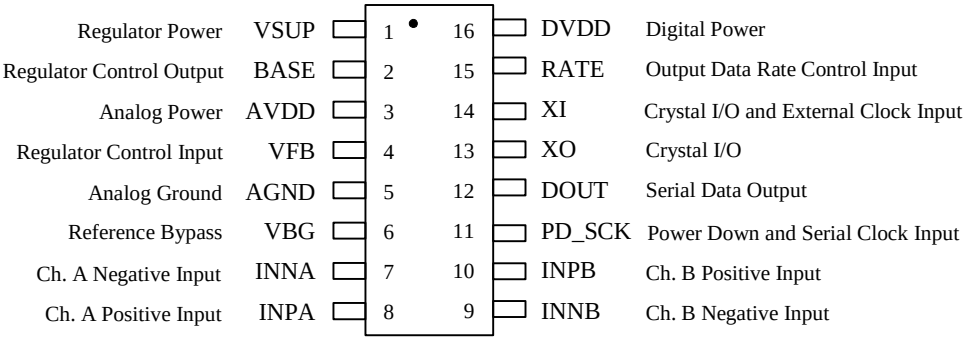

SOP-16L Package

Pin #	Name	Function	Description
1	VSUP	Power	Regulator supply: 2.7 ~ 5.5V
2	BASE	Analog Output	Regulator control output（NC when not used）
3	AVDD	Power	Analog supply: 2.6 ~ 5.5V
4	VFB	Analog Input	Regulator control input（connect to AGND when not used）
5	AGND	Ground	Analog Ground
6	VBG	Analog Output	Reference bypass output
7	INA-	Analog Input	Channel A negative input
8	INA+	Analog Input	Channel A positive input
9	INB-	Analog Input	Channel B negative input
10	INB+	Analog Input	Channel B positive input
11	PD_SCK	Digital Input	Power down control (high active) and serial clock input
12	DOUT	Digital Output	Serial data output
13	XO	Digital I/O	Crystal I/O (NC when not used）
14	XI	Digital Input	Crystal I/O or external clock input, 0: use on-chip oscillator
15	RATE	Digital Input	Output data rate control, 0: 10Hz; 1: 80Hz
16	DVDD	Power	Digital supply: 2.6 ~ 5.5V

Table 1 Pin Description

KEY ELECTRICAL CHARACTERISTICS

Parameter	Notes	MIN	TYP	MAX	UNIT
Full scale differential input range	V(inp)-V(inn)		±0.5(AVDD/GAIN)		V
Common mode input		AGND+1.2		AVDD-1.3	V
Output data rate	Internal Oscillator, RATE = 0		10		Hz
	Internal Oscillator, RATE = DVDD		80		
	Crystal or external clock, RATE = 0		f_{clk}/1,105,920		
	Crystal or external clock, RATE = DVDD		f_{clk}/138,240		
Output data coding	2's complement	800000		7FFFFF	HEX
Output settling time (1)	RATE = 0		400		ms
	RATE = DVDD		50		
Input offset drift	Gain = 128		0.2		mV
	Gain = 64		0.4		
Input noise	Gain = 128， RATE = 0		50		nV(rms)
	Gain = 128， RATE = DVDD		90		
Temperature drift	Input offset（Gain = 128）		±6		nV/℃
	Gain（Gain = 128）		±5		ppm/℃
Input common mode rejection	Gain = 128， RATE = 0		100		dB
Power supply rejection	Gain = 128， RATE = 0		100		dB
Reference bypass（V_{BG}）			1.25		V
Crystal or external clock frequency		1	11.0592	20	MHz
Power supply voltage	DVDD	2.6		5.5	V
	AVDD，VSUP	2.6		5.5	
Analog supply current (including regulator)	Normal		1400		μA
	Power down		0.3		
Digital supply current	Normal		100		μA
	Power down		0.2		

（1）Settling time refers to the time from power up, reset, input channel change and gain change to valid stable output data.

Table 2 Key Electrical Characteristics

Analog Inputs

Channel A differential input is designed to interface directly with a bridge sensor's differential output. It can be programmed with a gain of 128 or 64. The large gains are needed to accommodate the small output signal from the sensor. When 5V supply is used at the AVDD pin, these gains correspond to a full-scale differential input voltage of ±20mV or ±40mV respectively.

Channel B differential input has a fixed gain of 32. The full-scale input voltage range is ±80mV, when 5V supply is used at the AVDD pin.

Power Supply Options

Digital power supply (DVDD) should be the same power supply as the MCU power supply.

When using internal analog supply regulator, the dropout voltage of the regulator depends on the external transistor used. The output voltage is equal to $V_{AVDD}=V_{BG}*(R1+R2)/R2$ (Fig. 1). This voltage should be designed with a minimum of 100mV below VSUP voltage.

If the on-chip analog supply regulator is not used, the VSUP pin should be connected to either AVDD or DVDD, depending on which voltage is higher. Pin VFB should be connected to Ground and pin BASE becomes NC. The external 0.1uF bypass capacitor shown on Fig. 1 at the VBG output pin is then not needed.

Clock Source Options

By connecting pin XI to Ground, the on-chip oscillator is activated. The nominal output data rate when using the internal oscillator is 10 (RATE=0) or 80SPS (RATE=1).

If accurate output data rate is needed, crystal or external reference clock can be used. A crystal can be directly connected across XI and XO pins. An external clock can be connected to XI pin, through a 20pF ac coupled capacitor. This external clock is not required to be a square wave. It can come directly from the crystal output pin of the MCU chip, with amplitude as low as 150 mV.

When using a crystal or an external clock, the internal oscillator is automatically powered down.

Output Data Rate and Format

When using the on-chip oscillator, output data rate is typically 10 (RATE=0) or 80SPS (RATE=1).

When using external clock or crystal, output data rate is directly proportional to the clock or crystal frequency. Using 11.0592MHz clock or crystal results in an accurate 10 (RTE=0) or 80SPS (RATE=1) output data rate.

The output 24 bits of data is in 2's complement format. When input differential signal goes out of the 24-bit range, the output data will be saturated at 800000h (MIN) or 7FFFFFh (MAX), until the input signal comes back to the input range.

Serial Interface

Pin PD_SCK and DOUT are used for data retrieval, input selection, gain selection and power down controls.

When output data is not ready for retrieval, digital output pin DOUT is high. Serial clock input PD_SCK should be low. When DOUT goes to low, it indicates data is ready for retrieval. By applying 25~27 positive clock pulses at the PD_SCK pin, data is shifted out from the DOUT output pin. Each PD_SCK pulse shifts out one bit, starting with the MSB bit first, until all 24 bits are shifted out. The 25th pulse at PD_SCK input will pull DOUT pin back to high (Fig.2).

Input and gain selection is controlled by the number of the input PD_SCK pulses (Table 3). PD_SCK clock pulses should not be less than 25 or more than 27 within one conversion period, to avoid causing serial communication error.

PD_SCK Pulses	Input channel	Gain
25	A	128
26	B	32
27	A	64

Table 3 Input Channel and Gain Selection

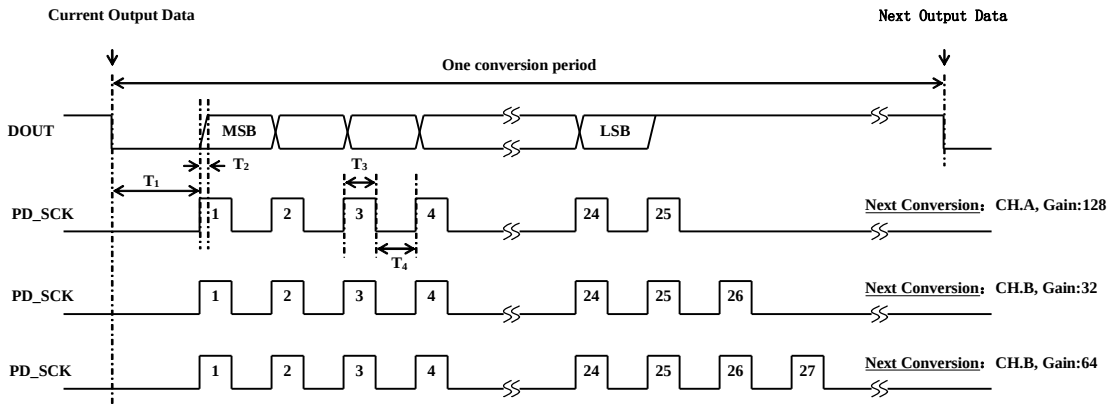

Fig.2 Data output, input and gain selection timing and control

Symbol	Note	MIN	TYP	MAX	Unit
T_1	DOUT falling edge to PD_SCK rising edge	0.1			μs
T_2	PD_SCK rising edge to DOUT data ready			0.1	μs
T_3	PD_SCK high time	0.2	1	50	μs
T_4	PD_SCK low time	0.2	1		μs

Reset and Power-Down

When chip is powered up, on-chip power on rest circuitry will reset the chip.

Pin PD_SCK input is used to power down the HX711. When PD_SCK Input is low, chip is in normal working mode.

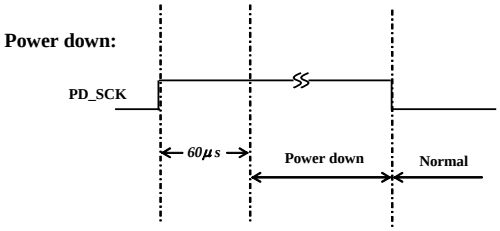

Fig.3 Power down control

When PD_SCK pin changes from low to high and stays at high for longer than 60μs, HX711 enters power down mode (Fig.3). When internal regulator is used for HX711 and the external transducer, both HX711 and the transducer will be powered down. When PD_SCK returns to low, chip will reset and enter normal operation mode.

After a reset or power-down event, input selection is default to Channel A with a gain of 128.

Application Example

Fig.1 is a typical weigh scale application using HX711. It uses on-chip oscillator (XI=0), 10Hz output data rate (RATE=0). A Single power supply （2.7～5.5V） comes directly from MCU power supply. Channel B can be used for battery level detection. The related circuitry is not shown on Fig. 1.

Reference PCB Board (Single Layer)

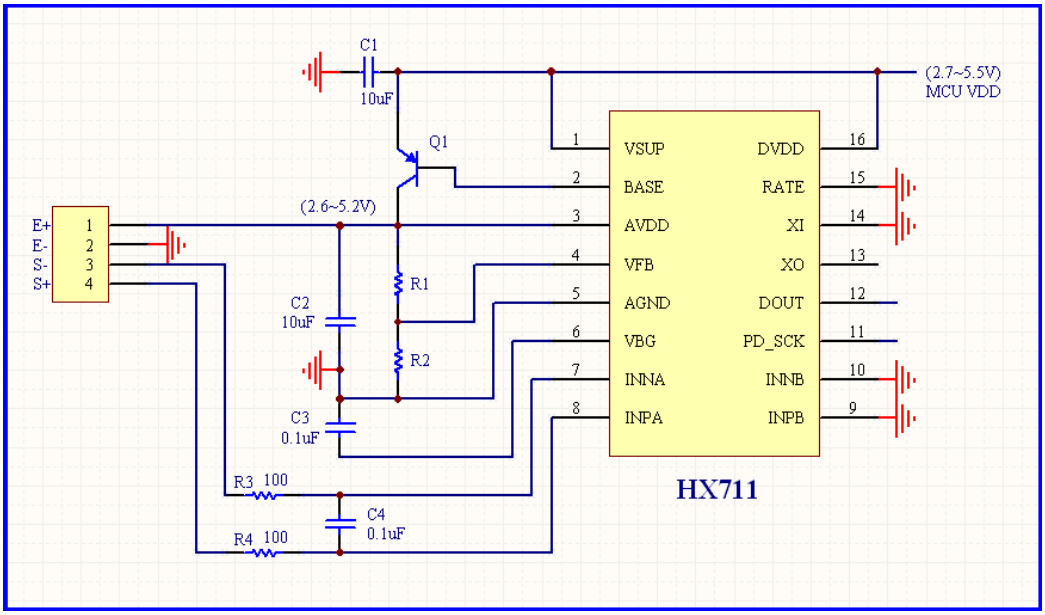

Fig.4 Reference PCB board schematic

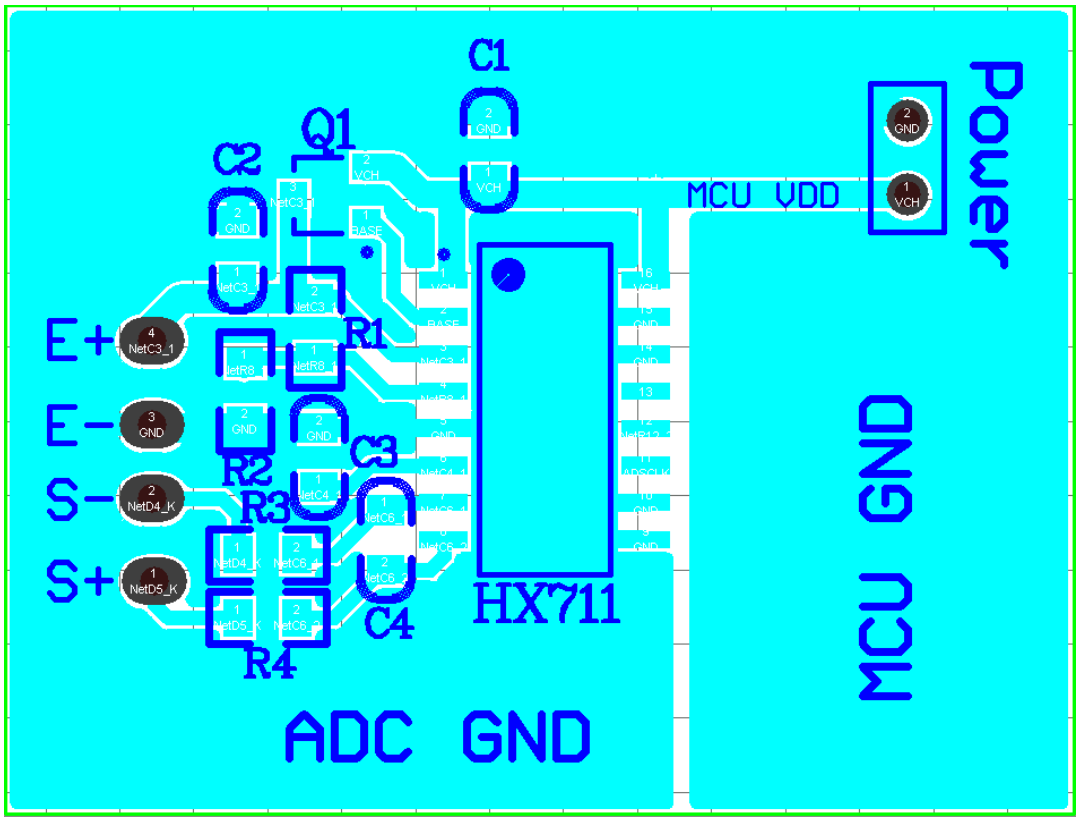

Fig.5 Reference PCB board layout

Reference Driver (Assembly)

```
/*-----------------------------------------------------------------
Call from ASM:      LCALL   ReaAD
Call from C:    extern unsigned long ReadAD(void);
                    .
                    .
                  unsigned long data;
                  data=ReadAD();
                    .
                    .
-------------------------------------------------------------------*/
PUBLIC        ReadAD
HX711ROM      segment  code
rseg          HX711ROM

sbit           ADDO = P1.5;
sbit           ADSK = P0.0;
/*-----------------------------------------------
 OUT:   R4, R5, R6, R7   R7=>LSB
-----------------------------------------------*/
ReadAD:
    CLR    ADSK              //AD Enable (PD_SCK set low)
    SETB   ADDO              //Enable 51CPU I/O
    JB     ADDO,$            //AD conversion completed?
    MOV    R4,#24
ShiftOut:
    SETB   ADSK              //PD_SCK set high (positive pulse)
    NOP
    CLR    ADSK              //PD_SCK set low
    MOV    C,ADDO            //read on bit
    XCH    A,R7              //move data
    RLC    A
    XCH    A,R7
    XCH    A,R6
    RLC    A
    XCH    A,R6
    XCH    A,R5
    RLC    A
    XCH    A,R5
    DJNZ   R4,ShiftOut        //moved 24BIT?
    SETB   ADSK
    NOP
    CLR    ADSK
    RET
    END
```

Reference Driver（C）

```
//-----------------------------------------------------------------
sbit   ADDO = P1^5;
sbit   ADSK = P0^0;
unsigned long ReadCount(void){
  unsigned long Count;
  unsigned char i;
  ADDO=1;
  ADSK=0;
  Count=0;
  while(ADDO);
  for (i=0;i<24;i++){
    ADSK=1;
    Count=Count<<1;
    ADSK=0;
    if(ADDO) Count++;
  }
  ADSK=1;
  Count=Count^0x800000;
  ADSK=0;
  return(Count);
}
```

Package Dimensions

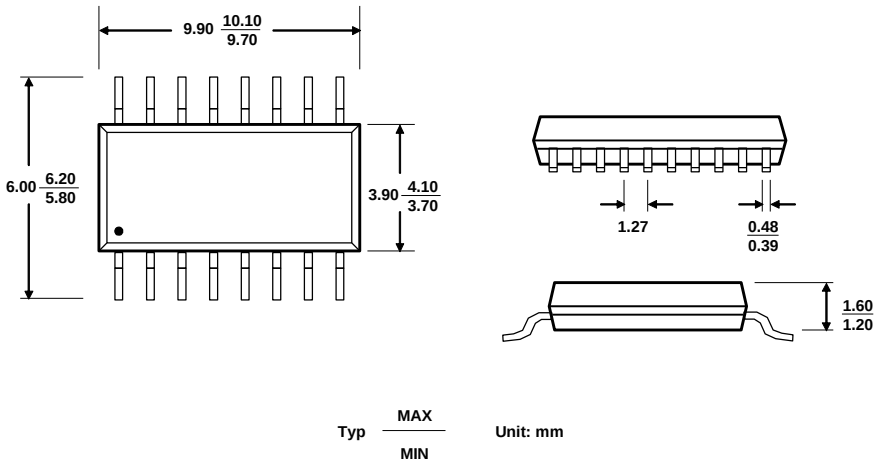

SOP-16L Package