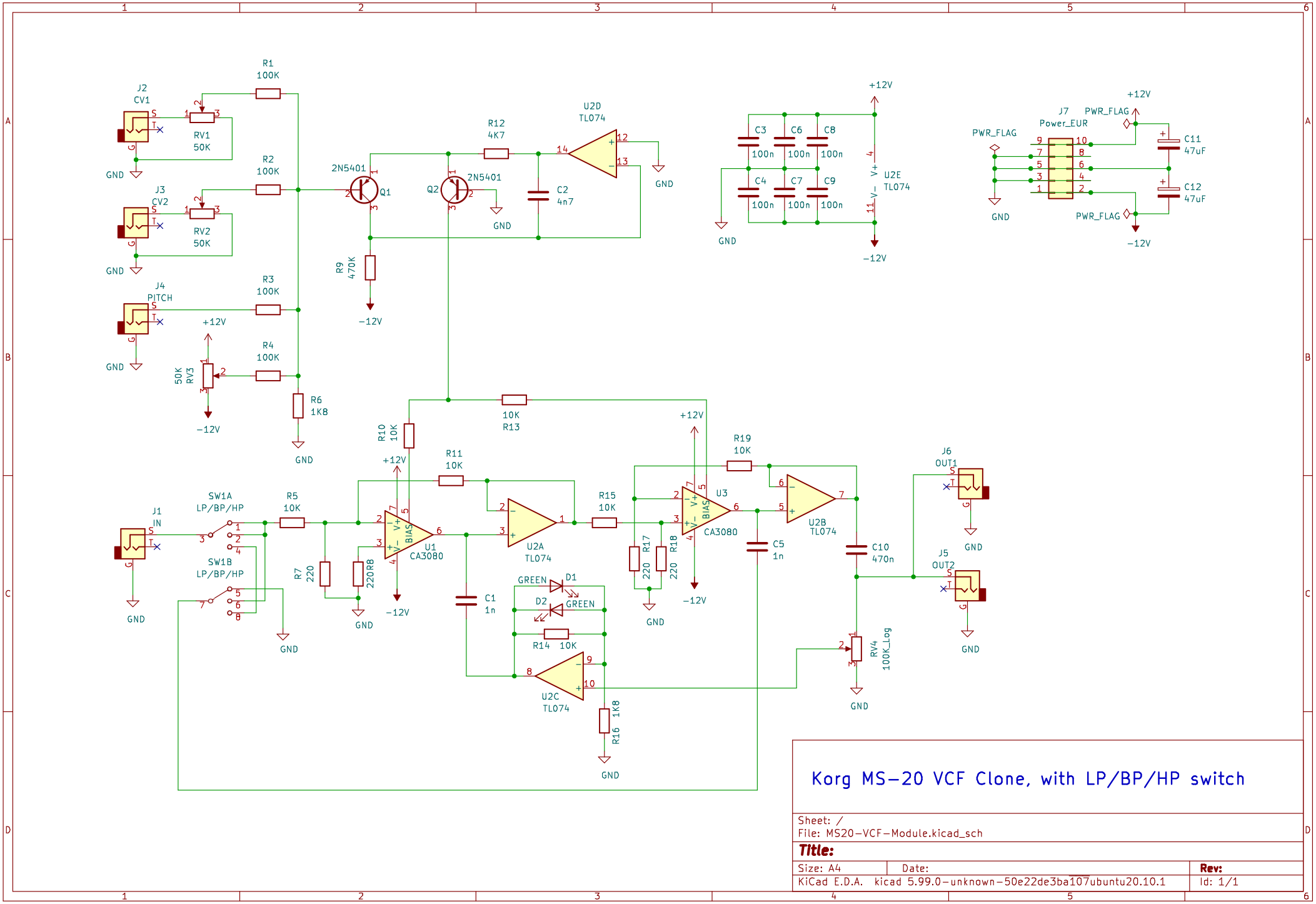

Korg MS-20 VCF Clone, with LP/BP/HP switch

Sheet: /
File: MS20-VCF-Module.kicad_sch

Title:

Size: A4	Date:	Rev:
KiCad E.D.A. kicad 5.99.0-unknown-50e22de3ba107ubuntu20.10.1		Id: 1/1