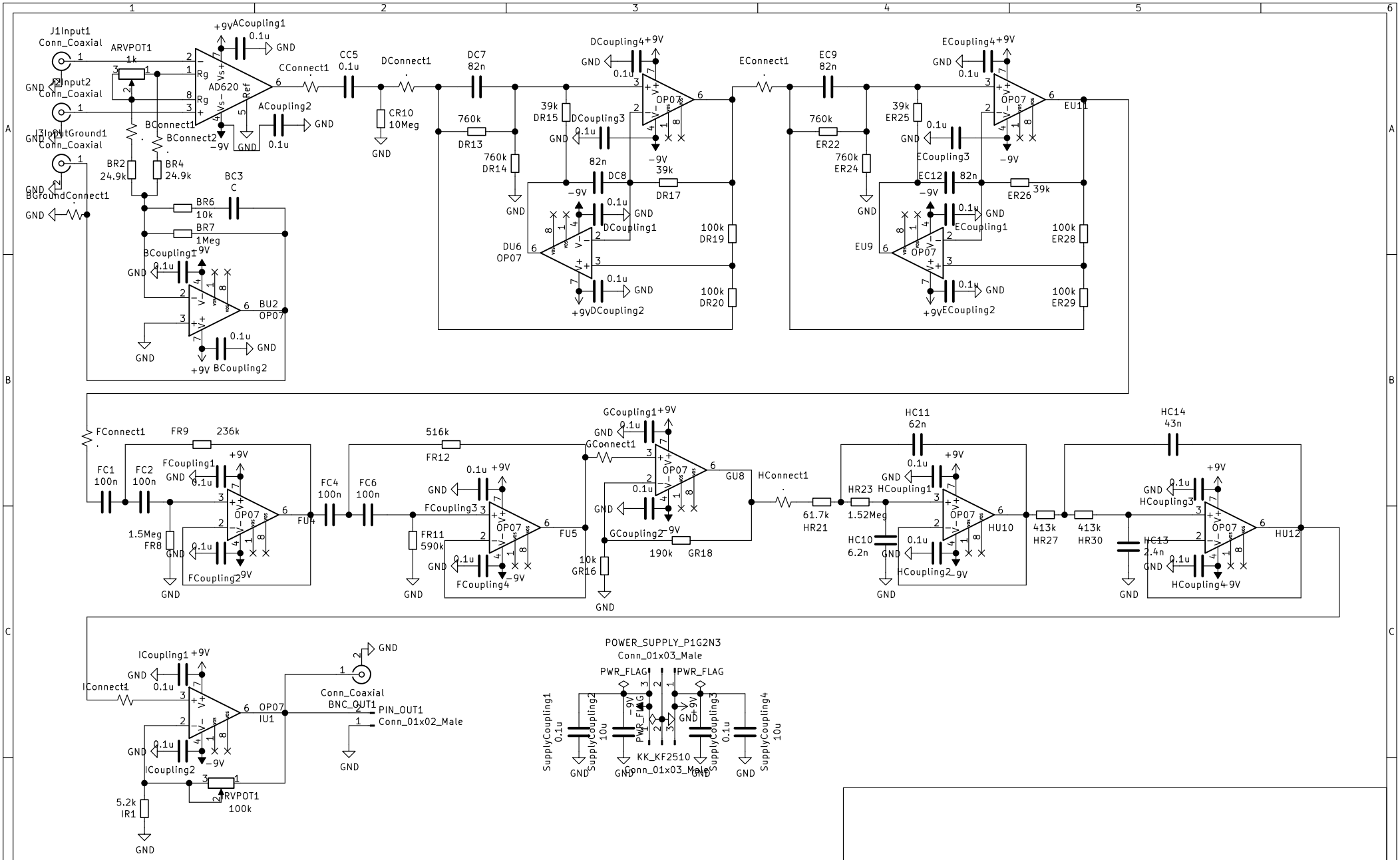

Sheet: /
File: EEG1.sch

Title: Electroencephalography_(EEG)

Size: A4	Date: April_2019	Rev:
KiCad E.D.A. kicad (5.1.0-0)		Id: 1/1