bookboon.com

Automation and Robotics

Miltiadis A. Boboulos

Download free books at
bookboon.com

Miltiadis A. Boboulos

Automation and Robotics

Download free eBooks at bookboon.com

Automation and Robotics
1st edition
© 2010 Miltiadis A. Boboulos & bookboon.com
ISBN 978-87-7681-696-4

Download free eBooks at bookboon.com

Contents

	Abstract	**7**
1	**Automation & Robotics: An Optimized Loudspeaker Assembly for a Mechanized Serial Production Line**	**8**
1.1	Introduction	8
1.2	Developing a dolly removal strategy	10
1.2.5	Involvement of the dolly in the coil assembly operation, motor unit assembly and dust cap cone	14
1.3	General assembly strategy	17
1.4	Feeder design	25
1.5	Assembly cell design	32
	References	40
2	**Design of speakers production: assembly line of capacity 180,000/month, 15 product variants**	**42**
2.1	Introduction	42
2.2	Strategy for the "dolly" removal	42

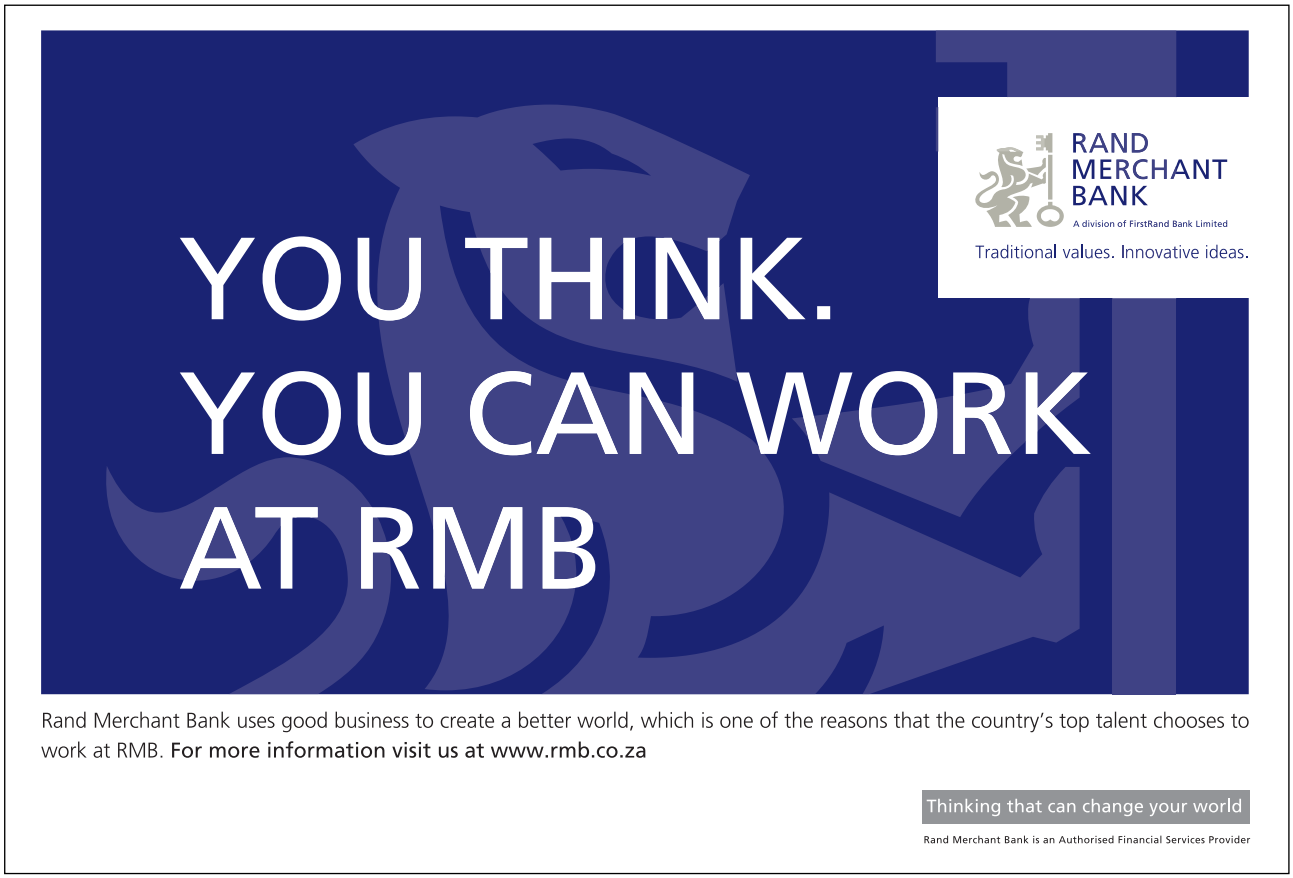

Download free eBooks at bookboon.com

Click on the ad to read more

2.3	General strategy	51
2.4	Feeder design	59
2.5	Evaluation of the assembly unit	73
	References	81
3	**Strategic approaches to resource husbandry and recovery: the superwash combo case study**	**83**
3.1	Introduction	83
3.2	The team's work	84
3.3	The performers	87
3.4	Quality	88
3.5	Market & production line	89
3.6	Environmental impact	92
3.7	Machines	93
3.8	Process technology & management	95
3.9	Raw materials & component parts	97
3.10	Conclusions	98
	References	98

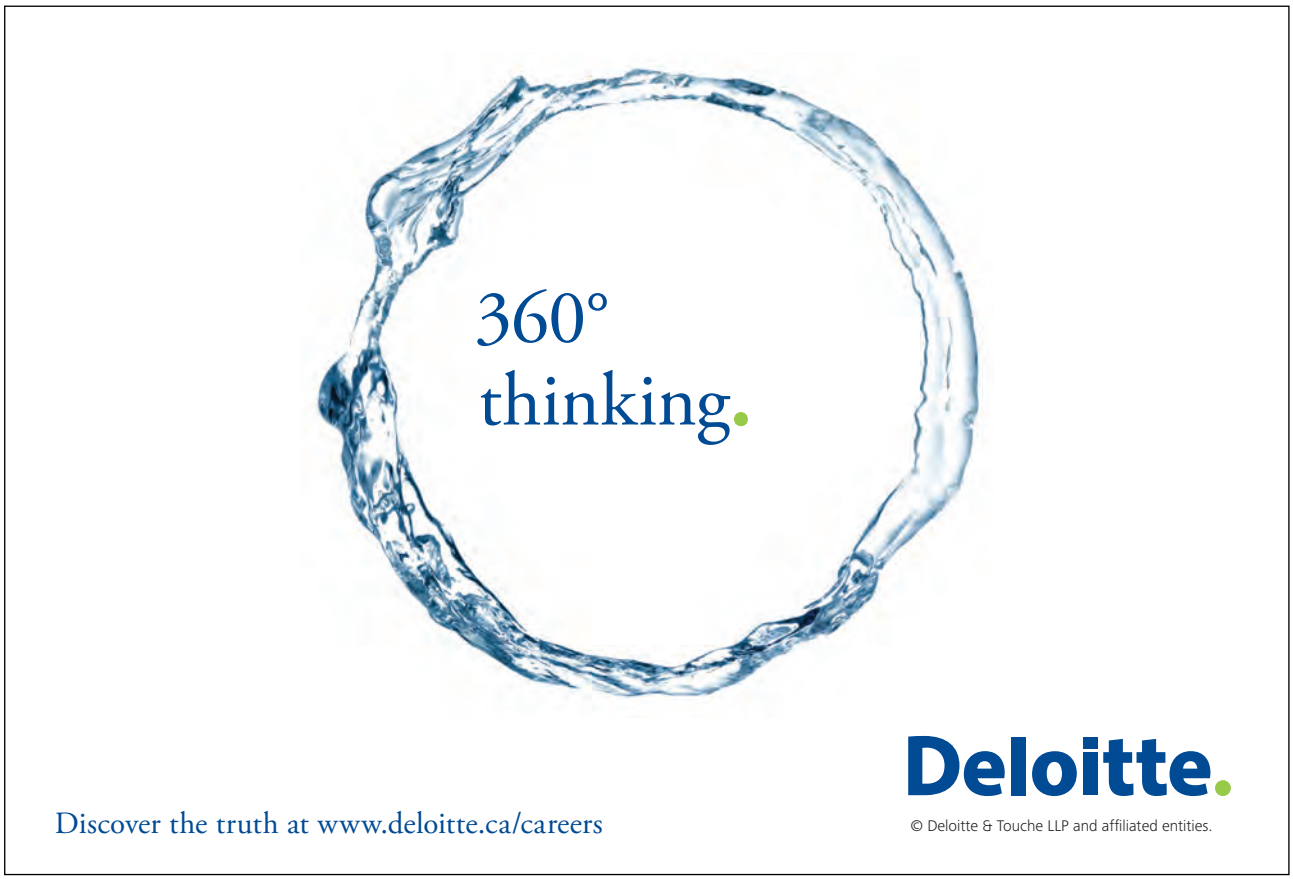

Download free eBooks at bookboon.com

Click on the ad to read more

4	**Software engineering and data communications: an automatic laminating plant**	**100**
4.1	Enviromental model	100
4.2	Behavioural model	103
	References	117
5	**Robot grip mechanism: control loop design considerations**	**118**
5.1	Introduction	118
5.2	Open loop system	119
5.3	Closed loop control system	120
5.4	Other control loop design considerations	125
5.5	Conlcusion	126
	References	126

Download free eBooks at bookboon.com

Click on the ad to read more

Abstract

In this book for the optimisation of assembly conveyor lines we are dealing with series part production featured by a medium complexity degree and a medium number of individual components and assembly technique alternatives. Modern production techniques for medium to large series products or mass production usually involve assembly conveyor lines. They still use hand labour more or less automated. The aim is to have monotonous and similar in type operations or such causing fatigue, stress and production traumas, gradually replaced by automated assembly cycles, means and techniques. This usually widely involves industrial robots and handlers. Higher productivity, lower cost and higher quality of assembled products are usually required.

Recently, latest assembly techniques for simpler or more complicated products in engineering, device manufacturing and electronics involve computer-aided automated assembly means in Flexible Automated Production Lines or other types of automated conveyor lines, which provide full automation and human labour replacement. Assembly alternatives involving automation, and mechanisation, programmable and adaptive control have been analyzed in Chapters 3–5. Practically, this means no large investment in the modernisation and expansion of the production capacity and the product's nomenclature.

MSM
MAASTRICHT SCHOOL OF MANAGEMENT
Increase your impact with MSM Executive Education

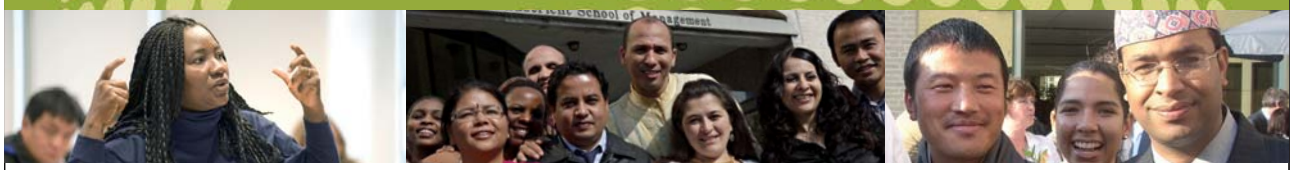

For almost 60 years Maastricht School of Management has been enhancing the management capacity of professionals and organizations around the world through state-of-the-art management education.

Our broad range of Open Enrollment Executive Programs offers you a unique interactive, stimulating and multicultural learning experience.

Be prepared for tomorrow's management challenges and apply today.

For more information, visit **www.msm.nl** or contact us at +31 43 38 70 808 or via admissions@msm.nl

the globally networked management school

Download free eBooks at bookboon.com

Click on the ad to read more

1 Automation & Robotics: An Optimized Loudspeaker Assembly for a Mechanized Serial Production Line

1.1 Introduction

Modern manufacturing of products in small and large scale series production utilise conveyors and automated assembly lines. The purpose is usually to reduce and replace as much as possible labour intensive and dangerous assembly operations with automated ones. Thus, productivity and quality can also be increased. Many current production processes involve computerised assembly using robots or flexible automated production systems where manual assembly operations are completely replaced by machines [1].

The aim is to have monotonous and similar in type operations or such causing fatigue, stress and production traumas, gradually replaced by automated assembly cycles, means and techniques. This usually widely involves industrial robots and handlers. Higher productivity, lower cost and higher quality of assembled products are usually required here. Recently, latest assembly techniques for simpler or more complicated products in engineering, device manufacturing and electronics involve computer-aided automated assembly means in Flexible Automated Production Lines or other types of automated conveyor lines, which provide full automation and human labour replacement [1].

In this loudspeaker production case study, we have a typical example of a series production, which provides opportunities for improved and automated assembly. Regardless of the wide variety of loudspeaker types and dimensions, this product is of average and even low complexity: it comprises 15 to 30 component parts. These can be assembled using mechanised assembly means with only a limited number of manually performed operations [2]. This data is used to calculate current assembly and conveyor parameters and eventually, assembly and conveyor parameters after the modifications and improvements in organisation.

Download free eBooks at bookboon.com

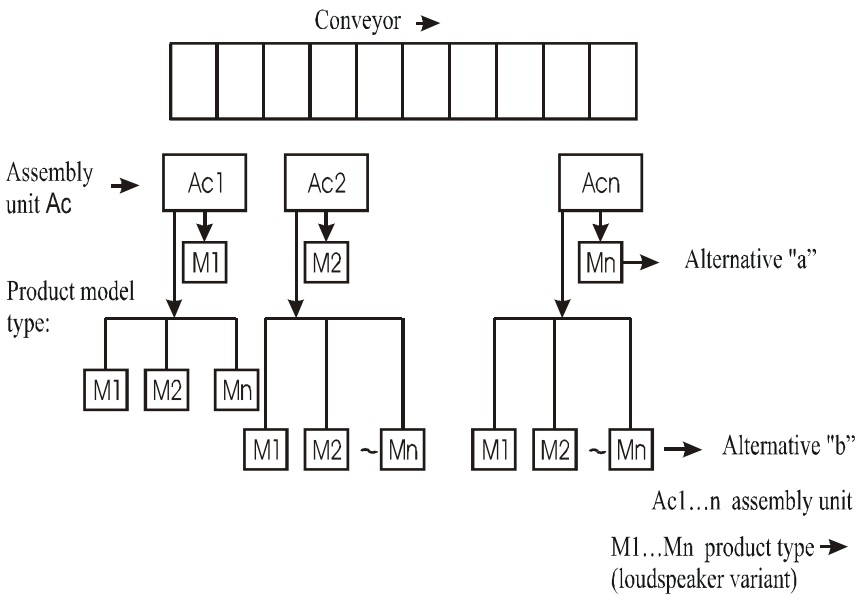

Figure 1 Initial organisation diagram

The work stations are positioned along the conveyor and various types and loudspeakers variants can be manufactured either in parallel time or consecutively in time (consecutive manufacturing of individual variants, individual production lots are run consecutively) [2]. In the alternative "a" each individual assembly unit is used to assemble one or maximum two types of loudspeakers. Therefore, it is equipped with fewer and simpler attachments and assembly equipment. (In this alternative, the skills required for assembly workers are not high) – Figure 1-a.

In the alternative "b" individual workstations included in the assembly unit (section) are supposed to be highly specialised and equipped with the necessary assembly means required to manufacture all variants of loudspeaker types. – Figure 1-b.

From Figure 1 it is understood that the alternative "a" is not applicable in our case since if only a single product type is to be manufactured at a time, assembly units designed for other products will be idle this being unacceptable.

Download free eBooks at bookboon.com

Assembly line output & conveyor operation

For the initial arrangement, 120 000/month – 6 variants (product types), the time required to manufacture a single loudspeaker assembly (T1a) will be:

(1) $T_{1a} = \frac{T_M}{N_M}$, where T_M – operational time for 1 month [hours], and

N_M – the number of products manufactured per month.

$$T_{1a} = \frac{50.4}{120000} = \frac{200}{120000} = 0.00166[h/unit],$$ where 4 is the number of weeks in a month.

$$T_{1a} = 0.00166.3600 = 6[\text{sec}/1unit]$$

Thus, with the initial line rate, six (6) seconds will be required to assemble a single loudspeaker unit. After subsequent modifications, we can calculate from expression (1) above for N_M = 180 000 [units/month]:

(2) $$T_{2a} = \frac{50.4.3600}{180000} = 4[\text{sec}/unit]$$

1.2 Developing a dolly removal strategy

1.2.1 Loudspeaker arrangement

In general, every loudspeaker features the type of design illustrated in Figure 2.

Item	Designation	Number	Material
1	Body (support chassis)	1	Fe, Al metal
2	Magnetic motor unit (system)	1	Fe, etc.
3	Membrane – conical shape	1	Composites
4	Packing – dust cap	1	Composites
5	Oscillator – corrugated, centring	1	Composites
6	Collar – corrugated, together with the conical membrane	1	Composites
7	Voice coil oscillator	1	Constituent assembly with coil
8	Electrical wiring – terminals and cable wiring for the coil	1	Electrical assembly made up of several components
9	Bonding and connecting elements (materials)	1	Glues, etc.

δ = 0.38–0.7 [mm], D – "centring" diameter between item 1 and item 2

Download free eBooks at bookboon.com

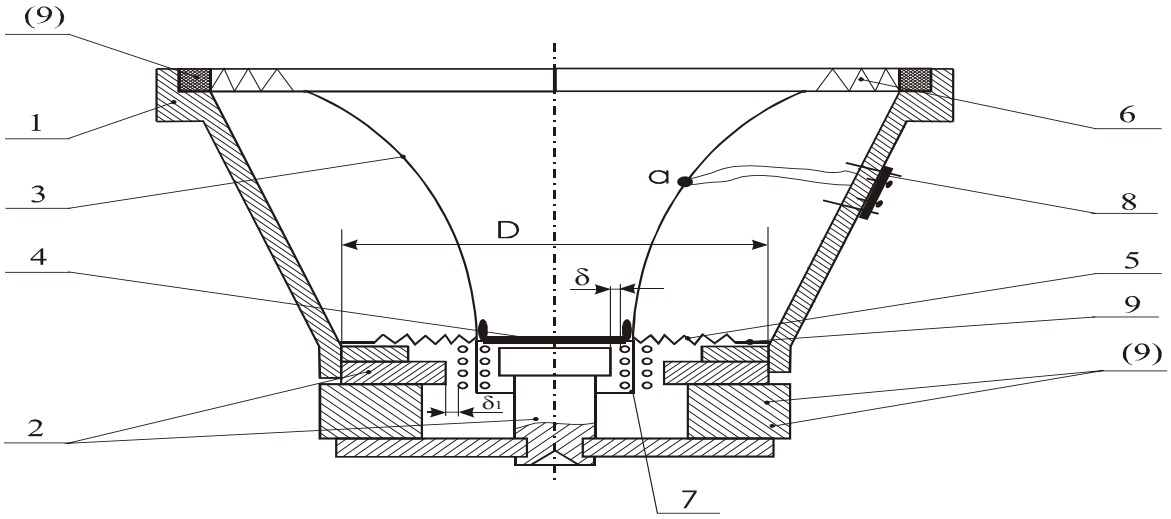

Figure 2

1.2.2 Operation

The electrical pulse transmitted via 8 to the coil 7 causes vertical oscillations as a result of the interaction between the electrical magnetic field of the coil and permanent magnets of 2. Oscillations are transferred to the conical membrane 3 and the centring oscillator 5 which maintains the gap $\delta = 0.38 \div 0.7$ mm (and δ_1) constant.

1.2.3 Description of assembly and characteristic features

The body 1, which is usually made of stamped steel or aluminium sheet is connected to the rest of the component parts by means of glue applied on its contact surfaces (only rarely by means of welding or riveting). The sequence of assembly operations is such that it allows for consecutive addition of individual component parts or sub-assemblies constituting the product and most important, good quality of bonding and connections, ensuring the gap δ (and also δ_1) is maintained.

For the purpose of all said above, sub-assembly 2 (motor unit) could be pre-assembled separately and then in turn assembled with the body 1. Separate pre-assembly can also be made for component parts included in the voice coil and the suspension 5, 7 and this whole assembly can later be glued to 9 to join it with 1 + 2, ensuring the gap δ is maintained for the dolly. The last parts to be assembled should be the cone 3 and the cover 4 and the wiring from the coil 7 to the terminals 8 and point *a* located on the cone 3. This results from the fact that it is impossible to glue 5 to 1 (with 9) when the cone 3 is assembled. If the cone 3 and the corrugated oscillator 5 are assembled at the same time, there is a risk of changing the gap δ after the dolly is removed because of the relatively heavier weight and higher "toughness" of the cone 3 when it has not been manufactured sufficiently precisely. Some lack of concentricity might arise when 6 is not properly glued to the body 1.

Download free eBooks at bookboon.com

1.2.4 Assemblies (sub-assemblies)

Considering Figure 1 and the original assignment, the sub-assemblies involved are:

1.2.4.1 The motor unit assembly

This comprises 4 separate parts usually round in shape (Fig. 3). D, d, d_1 are positioned concentric with each other and $d_1 - d = 2\delta_2$, where δ_2 is sufficient to insert the coil of the voice oscillator (item 7 in Figure 2) and leave a radial gap of $\delta = 0.35 \div 0.7$.

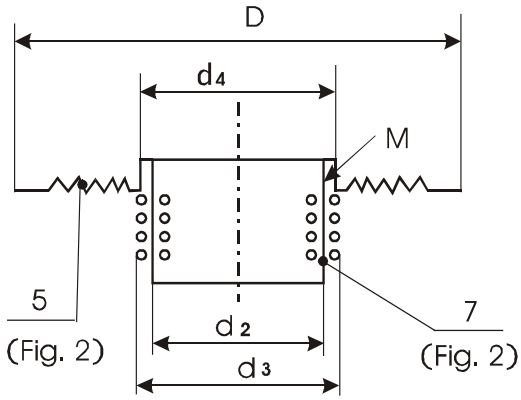

Figure 3 Key: 2.1 – central stud; 2.2 permanent magnet; 2.3 – top plate; 2.4 – bottom plate.

Component 2.1 riveted or pressed into 2.4 and 2.3, 2.2 and 2.4 are glued. The diameter D also serves to centre the sub-assembly in the body 1 (Figure 2) during the assembly operation.

1.2.4.2 Voice coil and suspension

It comprises 2 parts (Figure 4):
Oscillator, corrugated, centring (5 – Figure 4);
6. Coil (7 – Figure 4).
$d_3 < d_1$ (Figure 3) and $d_2 < d$ (Figure 3)
$d_2 - d = \delta$ and $\delta = 0.35 \div 0.7$[mm].
Components 5 and 7 are glued in between in the section M and the flange D_1 is used to glue the sub-assembly to the body 1 (Figure 2).

Download free eBooks at bookboon.com

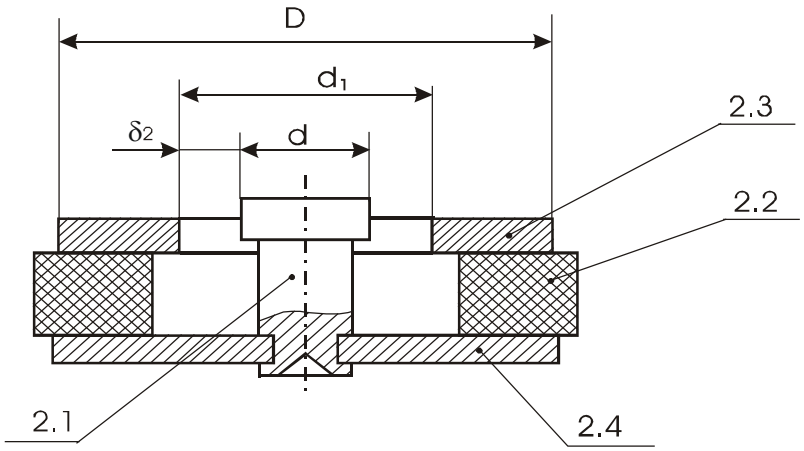

Figure 4

1.2.4.3 Cone and dust cap (Figure 2)

This comprises 2 parts and is glued to 1 and to the voice coil and suspension with the glue applied to d_4 (Figure 4).

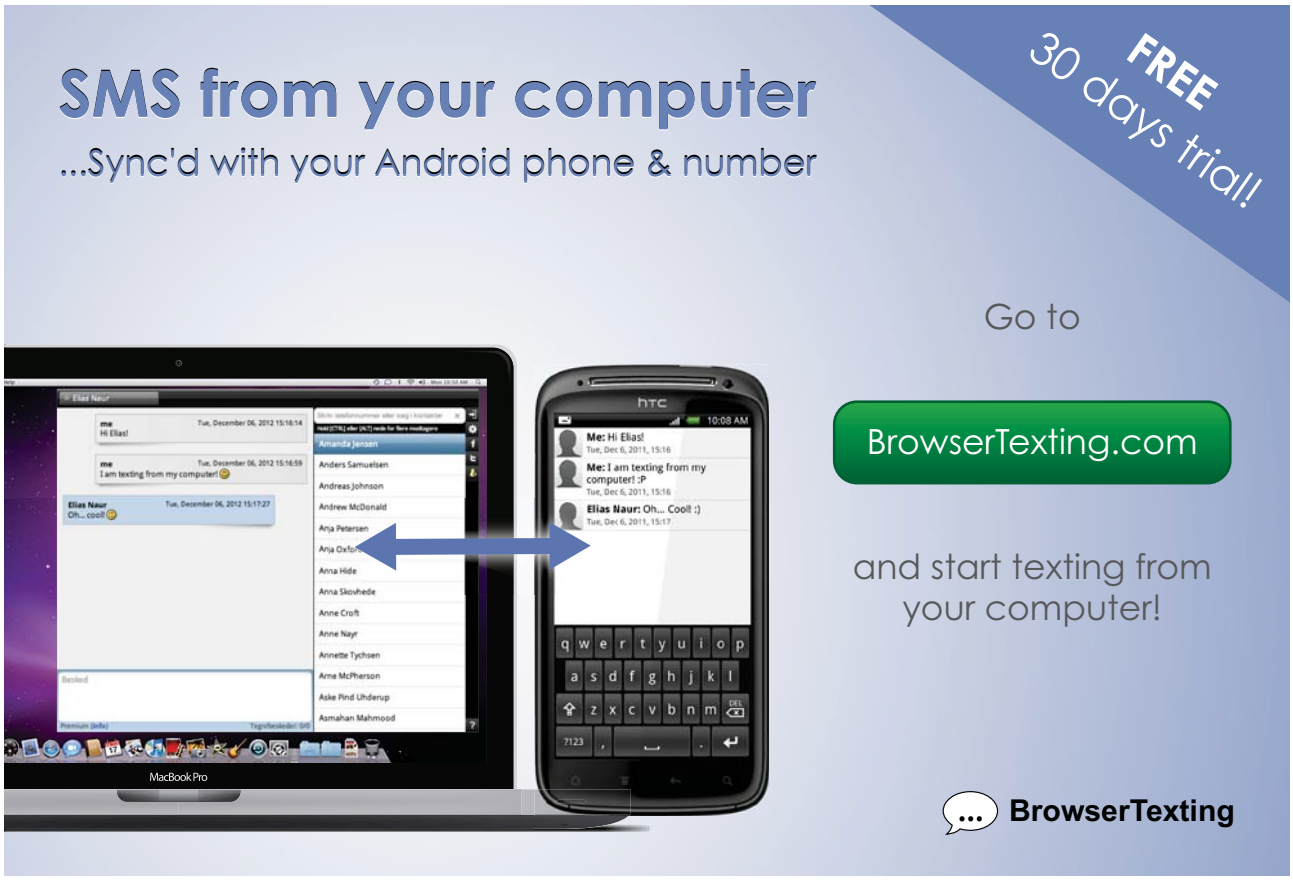

Click on the ad to read more

1.2.5 Involvement of the dolly in the coil assembly operation, motor unit assembly and dust cap cone

The dolly must be positioned between diameters d_2 and d thus ensuring concentricity and maintaining the gap $\delta = 0.35 \div 0.7\delta = 0.35 \div 0.7$ (Figure 5) when the voice coil and suspension are glued along D to the body 2.

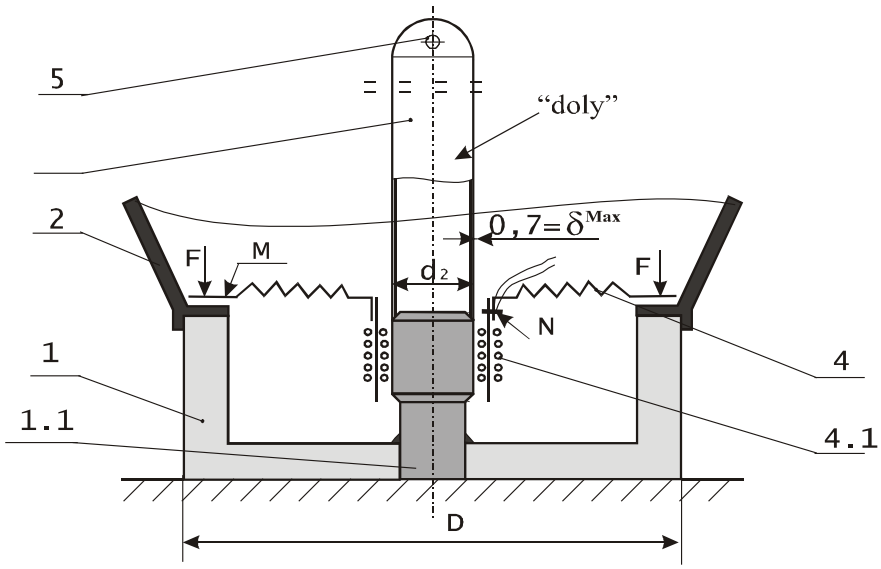

Figure 5 1. Device; 2. Loudspeaker body (chassis); 3. Dolly; 4. Oscillator, corrugated, centering; 5. Hole for installing the pulling handle (of the dolly); 1.1. Central stud; 4.1 Voice coil – constituent part of Item 4.

The arrangement shown in Figure 5 with an installed dolly in a "ready to remove" position is rather universal. The bottom section of the loudspeaker comprising the magnetic motor assembly is not shown in this arrangement but this is replaced by a simulation attachment, item 1.1.1, centred along D to item 2. Other alternatives of this arrangement are also possible where the "motor" (magnet and plates) can be pre-assembled in 2.

Figure 5 shows the operation of gluing the oscillator 4 to 2, applying the glue on the flange M and pressing on it using the force F, with the dolly, item 3, carefully pre-inserted in d_2 of the coil and then or at the same time installed over d. Before this operation is carried out, the oscillator 4 and the voice coil 4.1 are also assembled (glued) on N. Due to the difference in various designs of loudspeaker variants, the arrangement given in figure 5 also allows for observing the opposite order of operations for the assembly of the body 2 to match the order of adopted assembly operations [3].

1.2.6 Recommendation for mechanisation of the manual operation for the Dolly removal

A considerable number of methods and schematic diagrams for Dolly removal are possible using the movement of the conveyor in the area of this specific assembly work station. Figure 6 shows a diagram of a suggested semi-automated mechanical device (attachment) [4].

Download free eBooks at bookboon.com

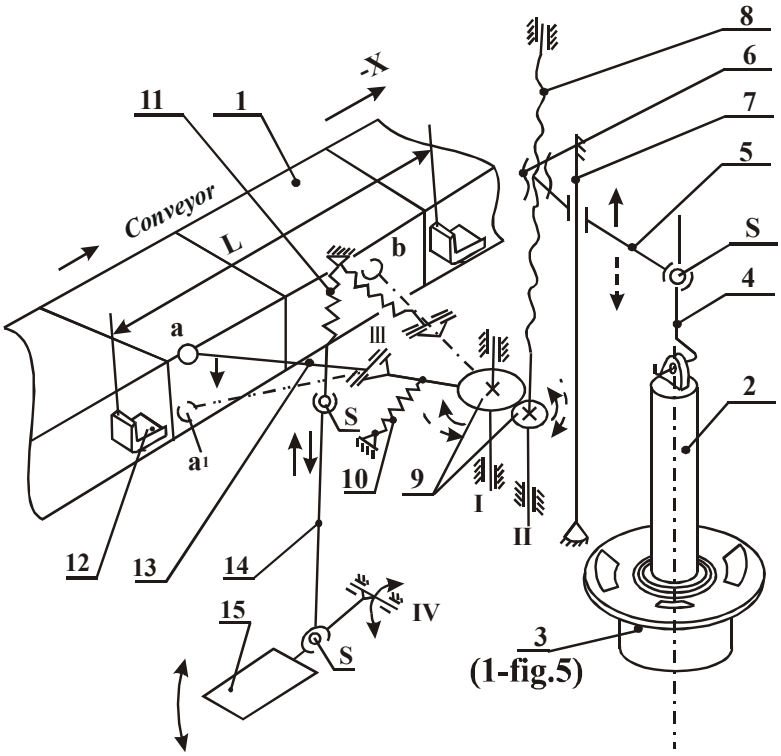

Figure 6: 1. Conveyor; 2. Dolly; 3. Product (loudspeaker); 4. Hanger hook; 5. Horizontal arm; 6. Nut; 7. Guide; 8. Screw; 9. Gear drive; 10. Spring – horizontal; 11. Spring – vertical; 12. Rest; 13. Actuating lever; 14. Vertical lever; 15. Pedal; S – Spherical hinges; D – Gap between rests item 12 – pitch.

1.2.6.1 Structure of the device and mode of operation

The device comprises the component parts as listed in Figure 6. The dolly 2 is located on the assembly work station where the centering oscillator is assembled to the loudspeaker body. The dolly is hung to the arm 5 by means of the hanger hook and the arm moves vertically along the guide 7 installed on the assembly device. The arm 5 ends on the nut 6 installed on the screw 8, which moves in both directions (clockwise and counterclockwise). The screw is seated on the pin II (z) and is driven by the gear drive 9 – pin I to pin II. The gear 9 (the larger one) is connected to the lever 13, which is equipped with an auxiliary hinge – pin III, such that the end section of the lever can move around the pin III at a certain distance along the ± Z axis. The entire lever 13 rotates at a specific angle around the pin I, for example at ± 90° (in the X0Y plane). The lever 13 is connected via a spherical hinge "S" to the vertical lever 14, which is in turn connected to the pedal 15 via "S" and the pedal moves in the clockwise and counterclockwise directions around the axis IV (Y). The lever 13 is kept horizontal and parallel to the X0Y plane by the spring 11 and it is kept in its starting position "a" by the spring 10.

Download free eBooks at bookboon.com

The mode of operation of the device involves pressing by hand of the lever 13 in the Z direction or pressing the pedal 15 by operator's foot until the end section of 13 moves from position "a" to position "a_1"with the rest 12 installed on the side of the conveyor, resting against 13 and rotating it in position "b", where it becomes disengaged from 13. Thus, the gear drive 9 is moved and the screw 8 is rotated and it in turn moves the nut 6 by means of the arm5r, the hinge S and 4 and dolly 2, respectively in the +Z direction, pulling on it directly along the direction of the axis from the product (the loudspeaker). Springs 10 and 11 restore the starting position of the hanger hook 4 ready for the next product, retracting the lever 13 in its "a" position.

1.2.6.2 Involvement of the conveyor

According to the arrangement described above, the conveyor moves the device and pulls out the dolly in the +Z direction by means of the rests 12 installed at a specific pitch L along the conveyor. Thus the involvement of the worker is reduced to moving the lever 13 down using a low effort, not requiring a very high effort or alert attention (for accuracy of movement) [3]. This movement can be performed manually or by the foot using the pedal 15. One opportunity for improving this strategy for dolly removal is to move 13 until it engages with 12 of the moving conveyor by means of an electrical magnet and a simple electrical diagram (contactor and a time relay) with the operator only pressing on an electrical button. Another alternative exist for the pedal 15 to move the screw 8 or 5 directly, but the use of the conveyor is then eliminated [5].

See the light!
The sooner you realize we are right, the sooner your life will get better!
A bit over the top? Yes we know!
We are just that sure that we can make your media activities more effective.

Get "Bookboon's Free Media Advice"
Email kbm@bookboon.com
bp CREDIT SUISSE DAIMLER Unilever Microsoft bookboon.com
Download free eBooks at bookboon.com
Click on the ad to read more

1.3 General assembly strategy

1.3.1 Review of assembly operations and assessment of their mechanisation suitability

The assessment of the suitability of a given product to be assembled in series production condition – conveyors, process flow lines and automated lines – should be made before introducing any sort of mechanisation whatsoever. Additionally, a more detailed differentiation can be made by complexity of realisation, duration, internal links and place of performance relative to other assembly operations, as well as a cost analysis [5]. A large number of assembly operations in various types of manufacturing processes currently involve manual labour since they are difficult to mechanise. A number of operations are still currently available which are hard or impossible to carry out when using assembly devices (manipulators, robots) [6]. There are also assembly operations where insufficient cost effectiveness makes them useless and not applicable in practice. Examples of such operations are:

- Insertion, centring and matching of more that a single component parts at the same time or simultaneous assembling of an assembly or a group of several component parts [7].
- When complex movements of the hand (manipulator) are performed to carry out the assembly operations, such as rotations along more than 1–2 axes and movements along such axes; insertions into tight spaces and gaps [8].
- Many assembly operations exist that require auxiliary manipulations involving secondary operations: additional support of the work piece, rounding edges, welding and soldering, screws and rivets in locations that are hard to access, angles, and openings [9].
- Operations that are difficult to mechanise and automate are also gluing and sealing with glue packings and pastes of a specified amount, running electrical wires or steel wire through holes (such as the voice coil wires) [7].
- Fragile, tender and low-size (or very heavy) component parts.
- In general, the assembly characteristics of the product involve the analysis of all these elements. On the other hand, the structure of the product shall be modified to a maximum extend to suit the assembly requirements aimed at introducing some mechanisation and automation into processes [8]. In our specific case we make an assessment of all described above relative to loudspeaker assembly processes.

1.3.2 Selection of an assembly unit

In accordance with the original assignment, we selected the motor unit assembly (item 2.1) as a suitable assembly unit for mechanisation – pole plate, magnet, top plate and a central stud. According to the specific variant of product design model (type of product) and the overall assembly process involved, we can also add here the metal body (casing) of the unit. We considered a ready-made and assembled loudspeaker motor unit assembly in series production [10].

Download free eBooks at bookboon.com

1.3.2.1 Grounds for making this particular selection in view of possible mechanization

The motor unit assembly is made up of mainly rotating and simple shaped component parts. These are sufficiently easy to grip and move using mechanised gripping means, such as manipulators, and robots [11]. It is also possible and fairly convenient to move these using some simple devices, such as pallets and crates. The material they are made of – iron and ferrous alloys, can also be used to transport them by means of using their magnetic properties [12].

1.3.3 Stage: Assembly of motor unit – Figure 7

1.3.3.1 Component parts and features

The "motor unit assembly" comprises 4 individual sections. We can also regards as parts of this assembly the body of the loudspeaker item 5, which is pressed into the assembly along d_4 (D6/k6).

We must clarify here that more than one possible assembly techniques exist for this specific assembly depending on the adopted assembly process pertaining to the "oscillator with voice coil" stage (5 in Figure 2).

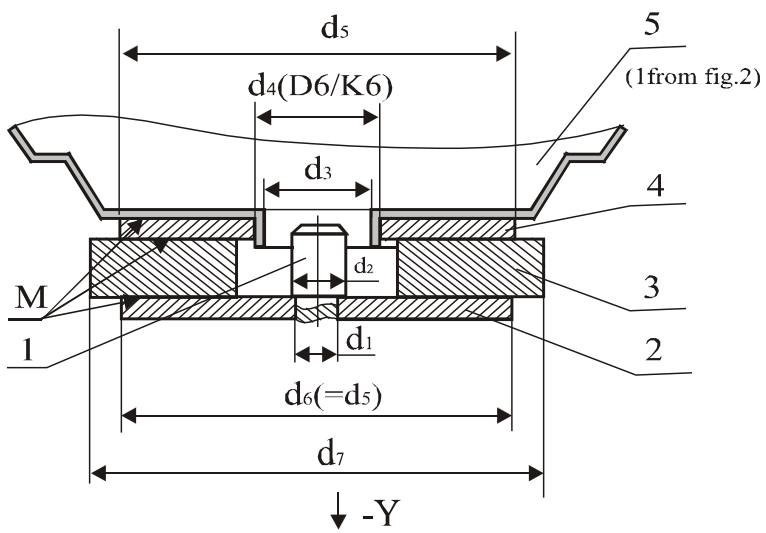

Figure 7: 1. Central stud; 2. Bottom plate; 3. Magnet; 4. Top plate; 5. Loudspeaker body.

a) The oscillator can be assembled with 5 before the motor unit assembly is assembled, as shown in figure 5. Components 1, 2, 3, 4 (Figure 7) are assembled afterwards.
b) Vice versa, where the oscillator is assembled with 5 after the overall assembly of the motor unit is complete (again using the arrangement illustrated in Figure 5)
c) The plate 4 (Figure 7) can be assembled with 5 in advance and the last to be assembled are components 1, 2 and 3 which are assembled separately and then glued along surfaces M. This operation is performed after the oscillator is assembled. With this specific assembly sequence, 1 and 2, 4 and 5, 1 + 2 and 3 are assembled in advance and the last to be assembled are 1 + 2 + 3 with 5 + 4.

Download free eBooks at bookboon.com

In alternative "c" above, component 5 is installed into the oscillator gluing attachment facing back (rotated at 180°) (Figure 5) and the dolly is used to define the gap between d_3 and the outer diameter of the voice coil. In this specific case the dolly is pulled in the direction – Y (Figure 7).

1.3.3.2 An example for an assembly process

We draw up a process flow map (Table 1) in order to clarify the assembly process at the "motor unit" stage (A). The map is made such that it gives an idea for the observed sequence of assembly operations, the means adopted to perform them, possible means of mechanisation and automation and operation time.

Download free eBooks at bookboon.com

Click on the ad to read more

No	Operation	Transition	Description of stage, operation, transition in operating condition a_1, c_1, d_1 Item No in fig.7	Feasibility of operation		Machine-M Tool – T Fixture – F Robot – R Manipulator – D Baseline:		Possible use of conveyor	Moves Between Pos Fig.8		Approximate duration	Notes, other data and description Moves from pos. No. to pos. No.
				manual	mechanical	robot (CNC)			from	to	sec	
1	2	3	4	5	6	7	8	9	10	11	12	13
	I	A1	Assembly 1 and 2									
1	I	01	Pick 1 from pallet or feeder and insert in fixture – operating position "a"	+	+	+	Move by R; D to press M_1 (Fixture)F1/d_2	-	a	a_1	2	Position a – pallet location; a_1 operational position for assembly
2	I	02	Pick 2 from pallet or feeder and place on 1	+	+	+	Move by R; D Baseline d_1(d_6)	-	b	a_1	2	Forms sub-assembly 1+2
3	I	03	Riveting (on d_1) of 1 to 2	-	+	+	Press M1 or R and T	-	a_1	c_1	1	Subassembly 1+2 is assembled
	II	A2	Assemble 1+2 with 3									
4	II	01	Pick 3 from pallet or feeder and place in c_1	+	+	+	Move with R or D/face and d_7	-	c	c_1	2	Possible to use multi position rotating device
5	II	02	Apply glue to 3 face b/n d_6-d_1	+	+	+	On a cotton stab with R or D	-	c_1	-	2	
6	II	03	Remove 1+2 from a_1 and place on 3 in c_1	+	+	+	Move with R or D	-	a_1	c_1	1	Allow glue to dry in c_1
	III	A3	Assemble 4 and 5									
7	III	01	Pick 5 from pallet or feeder and insert in fixture	+	+	+	Move with R or D/d_4 Move with R or D/d_4(on internal face D5-d3)	-	d	d_1	2	
8	III	02	Pick 4 from pallet or feeder and place on 5	+	+	+	Move with R or D/d_4	-	e	d_1	2	Press with effort to fit D6/k6 (from robot)
	IV		Assemble 4+5 with 1+2+3									
9	IV	01	Apply glue to face D_5-d_4 of 4 (4+5)	+	+	+	With second grip of R or D	-	d_1	-	3	
10	IV	02	Pick 1+2+3 from c_1 and place on 4+5 in d	+	+	+	With first grip of R or D	-	c_1	d_1	2	Press with effort to fit D6/k6 (from robot)
11	IV	03	Pick 4+5+1+2+3 from d_1 and move to k	+	+	+	With first grip of R or D	-	d_1	K	2	or to work place WP2

Table 1: Process flow map for analysis of the assembly operation

STAGE A Motor unit assembly – Figure 7 Items 1 thru 5

Key: yes = +; no = -; Example: 1+2 = assembled parts 1 and 2.

Note: Column 1 – [sec] for mechanised arrangement

Download free eBooks at bookboon.com

1.3.4 Recommendation for most suitable form of mechanisation and automation

1.3.4.1 Basic assembly scheme resulting from the above analysis

According to the indications in Table 1, we can then draw up the following diagram – Figure 8. I01….IV03 – assembly operations and transitions – 12 off

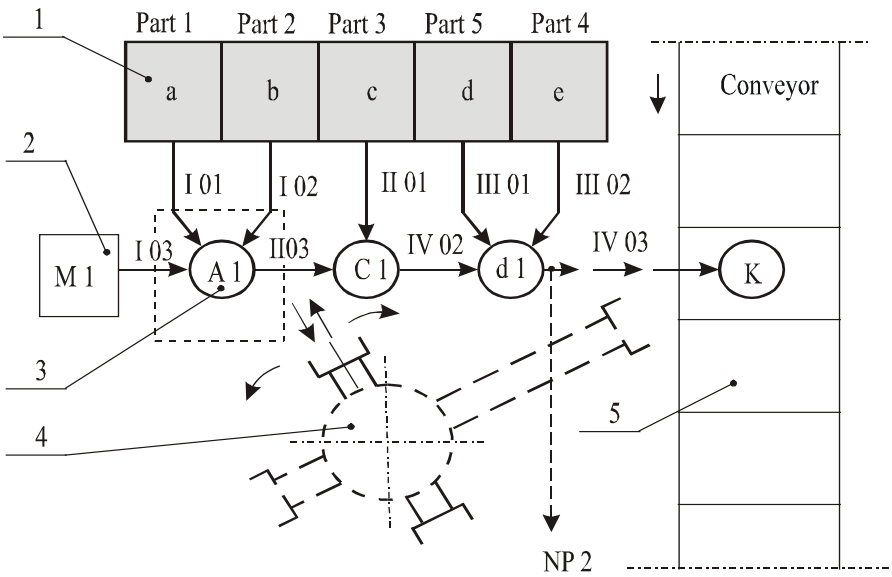

Figure 8: 1. Pallets for p[arts 1 thru 5 or feeding devices; 2. Press; 3. Assembly jigs a_1, c_1, d_1,; 4. Robot or CNC-controlled manipulator; 5. Conveyor.

1.3.4.2 Nature of the proposal for automation (Figure 8)

The assembly of the motor unit assembly (figure 7) is performed in working positions a_1, c_1 and d_1 which represent assembly fixtures suitably selected for the purpose and size of assembled components [12].

The component parts to be assembled are picked up from feeder devices or pallets from *a* thru *e* in the described sequence (Table 1) by a CNC controlled robot or industrial mechanical manipulator. Riveting of component parts is performed in working position a_1 (press work table) and in d_1 by means of the robot. Gluing and waiting for the glue to set is carried out in positions c_1 and d_1 to put together pre-assembled (mechanically) sub-assemblies 1+2 and 4+5. The finished assembly is then transferred from position d_1 to the conveyor "k" or work position WP2 in an alternative process organisation to proceed with further assembly operations required for the loudspeaker [13].

Download free eBooks at bookboon.com

1.3.4.3 End effector design

The design of the end effector is pre-defined by the proposed idea for mechanisation and automation of the process. In this particular case the end effector is the "arm" of the robot or the manipulator [14]. It performs all moving operations of components from the pallet (feeder device or cartridge bin), to riveting or gluing work positions and for staving component 4 into component 5. The arm then transfers the finished assembly to the conveyor "k" or straight at work position WP 2 for further assembly of other loudspeaker component parts. The arm shall be widely universal or adjustable for several types of component parts to allow handling of other product variants. It should feature two grips of varied operating position within a range of 180° and capable of applying a certain amount of force to press the D6/k6 subassembly in between 4 and 5. A suitable method of transferring component parts is via an electrical magnet built into the arm and providing reverse polarity (demagnetisation) or mechanical ejectors to insert parts securely into working positions a_1, c_1 and d_1.

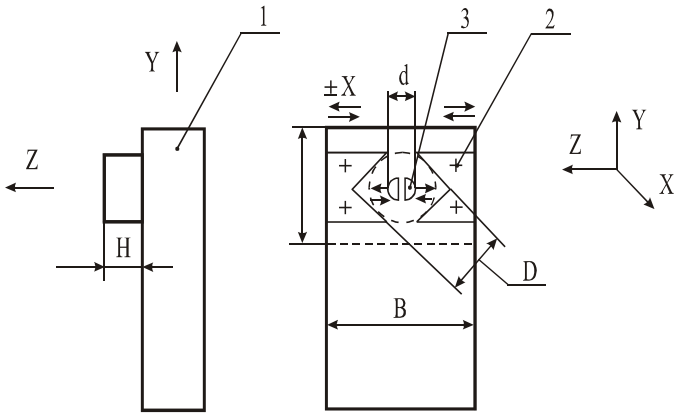

Figure 9

Figure 9 illustrates one example of an implemented design idea for a robot arm grip or manipulator ensuring fast, accurate and secure gripping of rotational components similar to most of those involved in the motor unit assembly. The jaws 2 (2 off) grip the outer diameter D of the component part and the jaws 3 (2 off) – the inner diameter d of openings in component parts. Some minor movement of the arm in the radial direction ± x ensures handling of component parts with large difference between inner and outer diameters d and D. The flat section of the arm A × B can also be an electrical magnet with possibilities for demagnetisation. This ensures secure transfer and facilitated placement of handled component parts. Jaw height *h* is of suitable size to handle the specific components and can be changed by means of readjustment or replacement.

Download free eBooks at bookboon.com

Another significant element of the end effector unit are the assembly fixtures in a_1, c_1 and d_1. These are relatively simple and low-cost to make. They represent seats for inserting and locating at least one component 1 thru 5 (Figure 7). The fixtures do not require any additional elements for holding or tightly fitting the component into them. Moreover, it is possible to make one fixture capable of holding several variants of shape and size of components or made readjustable as appropriate. One example of such fixture is illustrated in Figure 10.

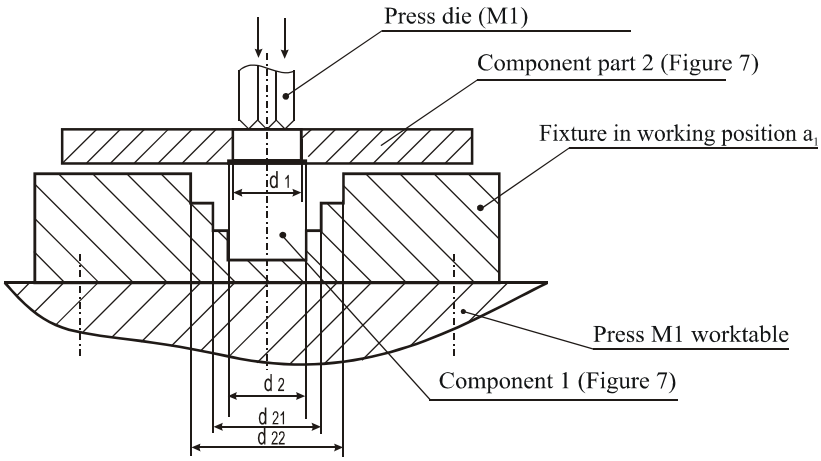

Figure 10

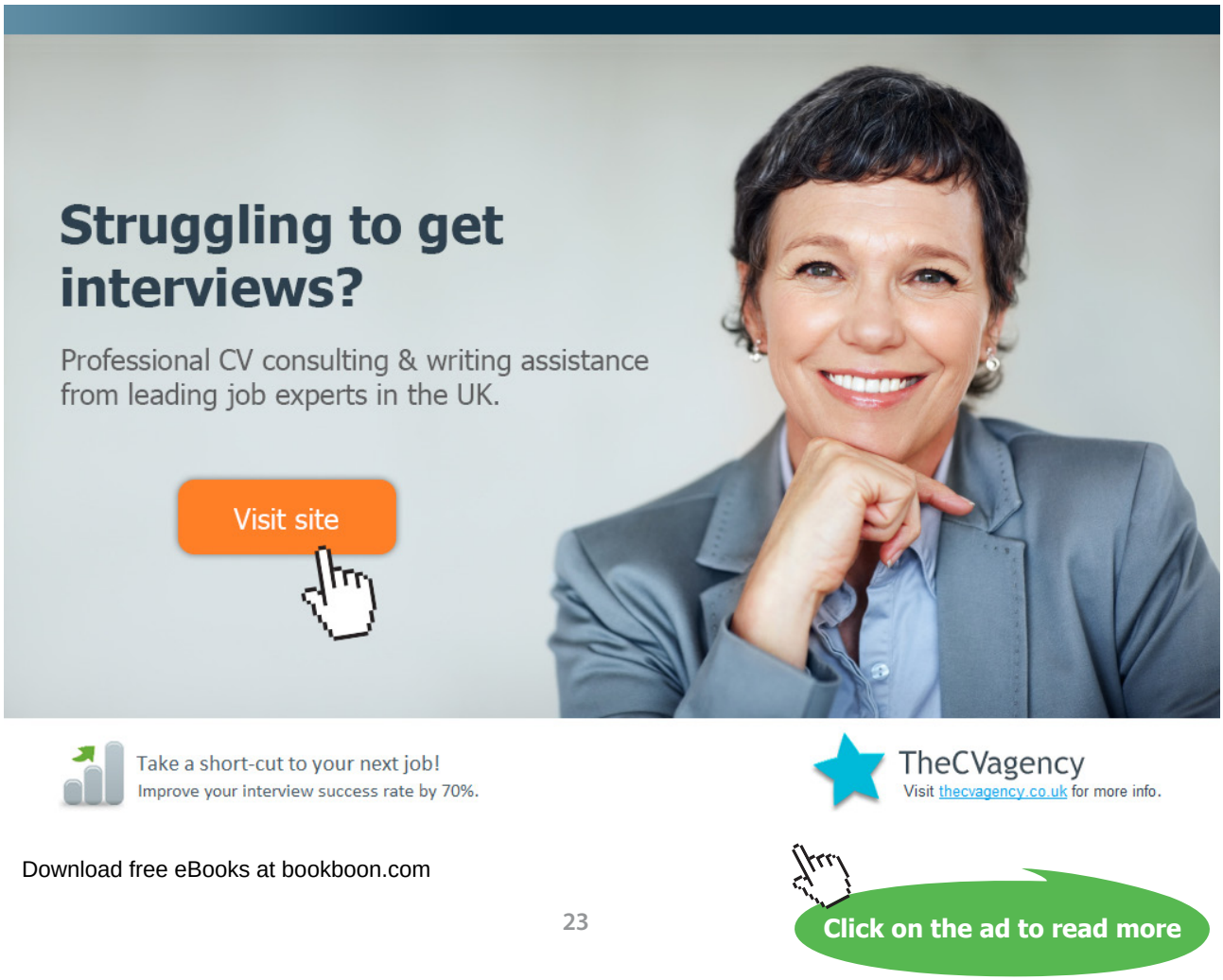

Download free eBooks at bookboon.com

Click on the ad to read more

The fixture used to insert component 1 to be riveted to component 2 can be used for 3 and more variants of the size d_2: $d_{2,}$ d_{21}, d_{22}, …d_{2n} of component 1.

1.3.4.4 Conveyor and its role in the organisation and mechanisation of the assembly process

The conveyor is used to provide transport of semi-finished products from the store in pallets or stacks of components and auxiliary materials. It is also used to transport finished assemblies and finished loudspeakers further down the line. According to the proposed mechanisation arrangement, no other involvement of the conveyor in the assembly process for the "motor unit assembly" is envisaged [15].

1.3.4.5 Feeding and storage of parts

According to the above description of the proposed assembly arrangement parts are delivered in pallets or preferably stacked into special cartridges. Pallets containing component parts can be delivered from the store by means of the conveyor, which transports them to the relevant assembly cells arranged around the conveyor [16]. Parts 1–5 should be stacked in pallets a–e (Figure 8) only if a robot or manipulator is available to pick them up from a specific location. This can also be done by an operator servicing at the same time more than just one single assembly cell, depending on the number of parts and the time required to assemble them.

When part feeder devices are employed, parts are stacked by the device itself and can then be loaded into attached feed stacker bins. Parts can also be delivered from the store to pallets items a–e by means of electric trucks or robo-trucks independent of the conveyor [14]. Additionally, parts can also be stored in the assembly cell itself in quantities sufficient to meet the requirements for 1 work shift plus some spare quantity. This depends on the overall size of the part and the space available. Parts are transported within the assembly cell automatically by means of a robot or manipulator [13].

Assembled finished sub-assemblies (for the motor unit assembly) are transported on the conveyor or fed directly to the neighbouring work position (WP2) to assemble other parts employing the same means (a robot or manipulator). It is also possible to have a buffer stock quantity of finished assembled motor units between individual assembly operations if this is required to facilitate the overall process organisation and to improve the operational reliability of the assembly line [17]. Such an opportunity will be available when the output of this stage A of the overall assembly process is higher than that required for the cyclic operation of the assembly line.

If special feeders are provided for feeding parts 1 thru 5, the operations of the robot or manipulator will be greatly facilitated. It is also possible to provide for direct feeding of parts into working positions a_1, c_1 and d_1 (Figure 8) by the feeders.

Download free eBooks at bookboon.com

1.4 Feeder design

We assume the feeder(s) will be used to feed component parts comprising the motor unit assembly – Item 2.1 in the original assignment. These are described in more detail in Para 3.4.1 – Figure 3 and Para 4.3.1 – Figure 7 above. Parts are of perfectly round shape and relatively small thickness to outer diameter ratio (h/D) i.e. a shape similar to spacers with only the central stud having elongated cylindrical shoulder shape. The body of the loudspeaker, item 5 in Figure 7, which we also included in the assembly operation, features considerably larger size and more complicated "conical" shape. Handling of this component during transportation would require specialised feeder devices or it can be picked up directly from a special stack cartridge (where several parts are stacked in order) by the arm of the robot (or manipulator). We assume the following specific sample dimensions of parts for the initially required provisions for part size and output data and re-filling cycle – Figure 11 (Note: designations and names are identical to those given in Figure 7).

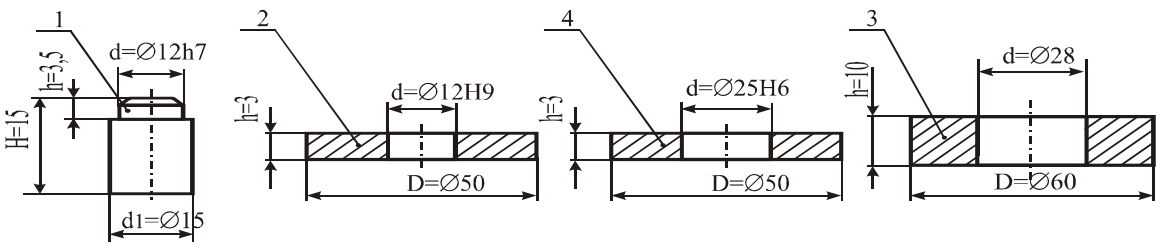

Figure 11

Due to the similar shape they feature, parts 2, 3 and 4 can be fed using a feeder design based on a single concept. Figure 12 illustrates one design solution for feeding this type of component parts.

1.4.1 Description – Figure 12

The feeder illustrated in the above figure features a part stacker bin 1 with double tilted bottom. The stacker bin is supported freely on rollers 2 and can be moved to a certain extend in the ± y directions along the guides 3 fixed in position. A gap of a size $h_1 > h$ of the part is provided between the two bottom of the stacker bin which are tilted at angles α and α_1. Connected detachable to the gap along the partition flange I-I is a trough having an inner section area larger than the cross sectional area (across the diameter) of the part being fed. A crank mechanism 12 is connected to the stacker bin and driven by the motor 13. An electrical sensor 11 and lock 10 are installed at the exit of the trough 5. The sensor is connected via the electrical wiring 14 to the motor 13. Optionally, or as an auxiliary attachment, a working position (a_1, c_1 and d_1 – Figure 8) can be installed next to the exit of the trough 5 and the assembly fixture 7 for the relevant assembly operation, transition and part size can be provided in this position.

Download free eBooks at bookboon.com

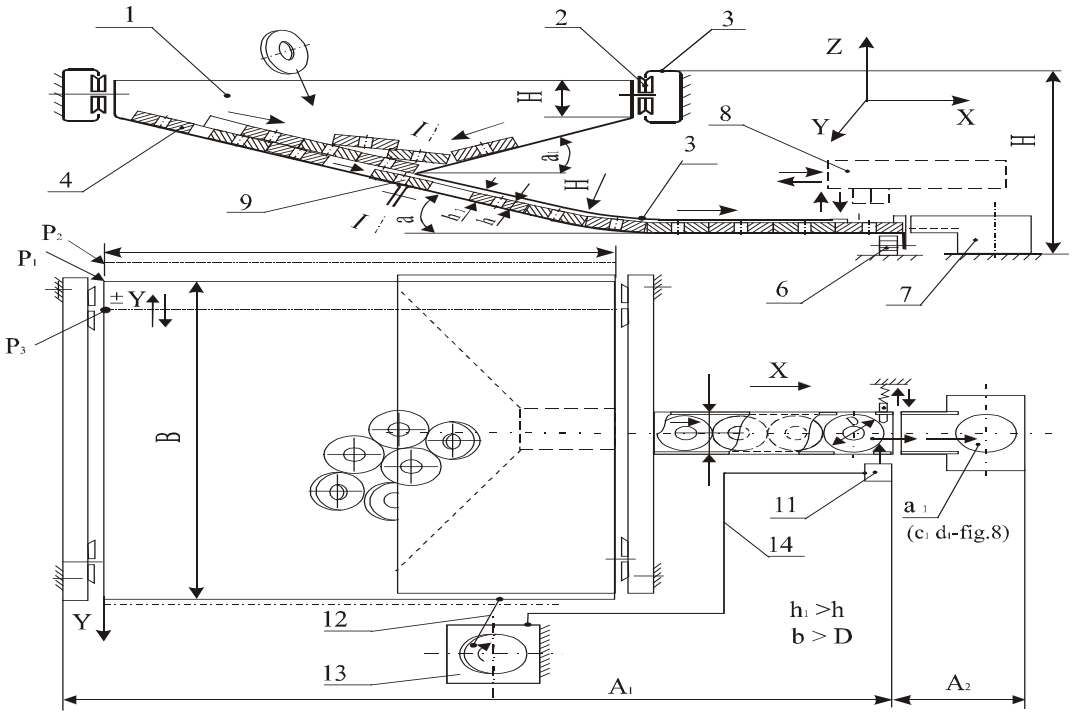

Figure 12: 1.Parts stack bin; 2. Roller; 3. Guide roller; 4. Component parts (of the 2, 3 and 4 type in Figure 11); 5. Trough; 6. Roller; 7. Assembly fixture (working positions a1, c1 and d1); 8. Robot arm (manipulator); 9. Gap; 10. Lock; 11. Electrical sensor; 12. Connecting rod – crank mechanism; 13. Motor; 14. Electrical wiring.

Download free eBooks at bookboon.com

Click on the ad to read more

1.4.2 Operation

Parts are dumped in bulk into the stacker bin 1 and arranged and stacked in heights of 5 or 6 with their flat side facing the bottom of the bin. Some of them fall the right way into the trough and move down the slope under their own weight towards the exit of the trough. In this end position the part 4 is locked by the lock 10 and actuates the sensor 11. The sensor 11 shuts off the motor 13 via the electrical wiring. The motor can be either electrical, pneumatic or hydro, etc. type motor depending on the available installations. The bin performs reciprocating movement along the ± Y under the action of the crank mechanism which is in turn driven by the motor. It is also possible to use a solenoid (electrical magnet) here to induce vibrations into the stacker bin 1. Vibrations of the bin cause the parts to be arranged in the right way and fall into the trough 5. When the part reaches the end position at the exit of the trough the grip of the robot (manipulator) 8 moves along X, Z and in radial direction relative to D to grip the part and transfer it to the required working position (a_1, c_1, d_1…). As an option the device allows installation close to a_1 where the robot can move the part in the + X direction without lifting it (direction Z), until it falls into a_1.

1.4.3 Cycle time

Considering the total time T_Σ of operations I 01 thru IV 03 (column 12 in Table 1) involved in the motor unit assembly stage:

(3) $T_\Sigma = 22$ [sec], the cycle time required to feed a single part 2 (Figure 11) is

(4) $T_2 = T_\Sigma = 22$ [sec], since there is only one such part in the assembly and it is handled by a single robot. In other words, the next part shall be fed in position a_1 after 22 seconds.

If we introduce more than one robot in the assembly cell for the specific stage of the process or only part 1 and 2 are handled by a single robot or manipulator,

(5) $T_{21} = \Sigma\, T_{Io1} + T_{Io2} + T_{Io3} = 2 + 2 + 1 = 5$ [sec]

also, $T_{11} = 5$ [sec] (until the sub-assembly 1 + 2 is finished).

1.4.4 Storage capacity

Considering the expected increase in output of the assembly line to 180000/month and increased number of servicing workers $N_w^{max} = 46$, we can calculate the number of assembly cells, the cycle time of operation of a single assembly cell and the minimum number of parts that must be assembled to provide for continuous operation of the line and meeting the required production output.

Download free eBooks at bookboon.com

If we assume 15 assembly cell are located along the entire length of the conveyor (60 m) each served by 3 workers as the product is assembled over three basic assembly stages (3 assemblies make up the entire product), then:

(6) $N_W = N_{AC} \cdot n_{WC} = 15 \cdot 3 = 45$ and one worker will not be occupied in the assembly process for the time being.

Here N_W is the total number of workers servicing the assembly line;
n_{WC} is the number of workers in a single assembly cell; and
N_{AC} is the number of assembly cells along the line.

From para 2.2. (2) above we have $T_{2C} = 4$[sec]

(7) $\therefore T_{AP} = T_{2C} \cdot N_{AC} = 15 \cdot 4 = 60$ [sec], where T_{AP} is the cycle time for a single assembly cell.

Above conclusion results from the assumption that the time available for each worker to complete a particular job to ensure a certain output is directly proportionate to the number of workers.

From (7) above we can calculate the required number of parts to provide for normal production run during one working shift:

(8) $Q_{WS} = \dfrac{10.3600}{60} = 600$ parts, where:

Q_{WS} is the minimum quantity of parts assembled within 10 hours (one working shift).

From (8) above we can draw the conclusion that 600 parts of each specific type required for the motor unit assembly (1, 2, 3 and 4 – Figure 11 and part 5 in Figure 7(body)) shall be delivered and be available in each assembly cell for one working shift (10 hours).

1.4.5 Basic dimensions (Figure 12)

From (8) above we can draw the conclusion that if part dimensions are according to Figure 11, a maximum of 600 parts 2, 4 (1,3) can fit into the bin 1 (Figure 12). With parts 2 and 4 stacked next to each other at several layers (layers of H1), we calculate the dimensions A, B, H, H1 of the feeder device:

The volume of space occupied by a single part 2 (4) is $V_{2(4)}^{\max} = h + D^2$ (Figure 11)

$$V_{2(4)}^{\max} = 0{,}3x5^2 = 7 \text{ [cm}^3\text{]}$$

from (8) above $V_{2(4)}^{\max} . Q_{WS} = 7{,}5x600 = 4500$ cm^3.

Download free eBooks at bookboon.com

Therefore ∴ The dimensions of the stacker bin 1 – V_S are:

$$V_S^{\min} \geq 4500 = A.B.H_1$$

If we assume: A = 400mm; B = 400 mm and H_1 = 100, then:

(9) $V_S = 40 \,.\, 40 \,.\, 10 = 16000 \text{ cm}^3 > V_S^{\min}$.

The dimensions of the feeder are approximately as follows:

A = 400, B = 400, H_1 = 100, A_1 = 800, H = 400 [mm] and is capable of loading sufficient quantity of parts to provide for one working shift production = 10 hours operation.

If we consider parts 1 and 3 (Figure 11), this stacker bin is sufficient to hold 600 parts 1 and 300 parts 3 as above:

$$V_3^{\max} = 1x6^2 = 36\,[\text{cm}^3] \qquad V_3^{\max}.Q_{WS} = 36x600 = 21600\,[\text{cm}^3]$$
$$V_1^{\max} = Hxd_1^2 = 1{,}5x1{,}5^2 = 3.375\,[\text{cm}^3]$$
$$V_1^{\max}.Q_{WS} = 3{,}375x600 = 2025\,[\text{cm}^3] \leq V_3.$$

Considering the existing differences in parts 1 and 3, the design of the feeder mechanism is further explained here.

Click on the ad to read more

1.4.6 Method of re-filling

From all mentioned above we can draw the conclusion that the feeder device shall be loaded once in a working shift for parts 1, 2 and 4 and twice for part 3. This can be done when parts are delivered in a pallet in bulk (not arranged and stacked in the pallet) and these pallets are dumped into the stacker bin 1of the feeder device.

This technique is not suitable for parts 1 and 3 for the illustrated design because of the peculiar shape of part 1 and the magnetic properties exhibited by part 3. A modified feeder device for these two parts is illustrated and they shall be fed by means of stacked cartridges for parts 1 and 3 or through modification of the bottom and trough of 1 in the feeder device.

1.4.7 Stacker bin for feeding type 1 parts stacked and properly arranged

The device illustrated in Figure 12 is not suitable for feeding parts of the type 1 due to their different geometry. Instead, we could use the stacker bin 1 as illustrated in Figure 13 still keeping the rest of the feeder mechanism unchanged to stick to the basic idea (unified with the idea adopted in Figure 12).

1.4.7.1 Arrangement

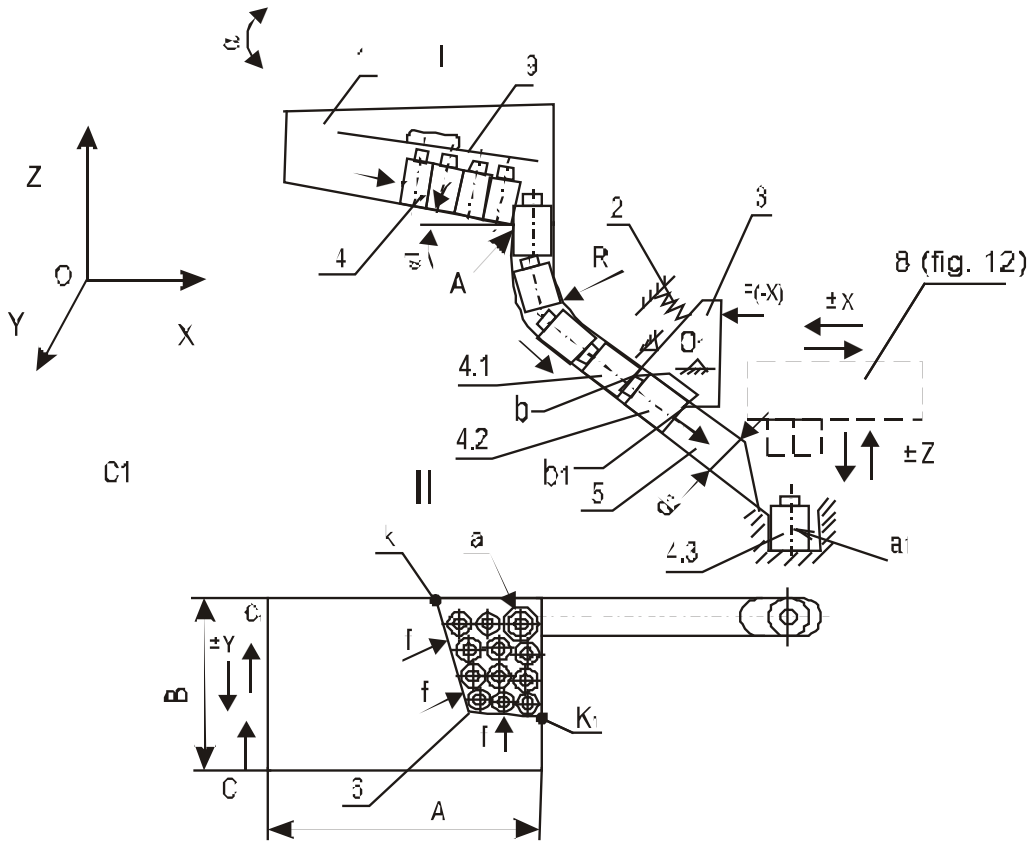

Figure 13: 1. Parts stacker bin (modified for part 1 from Figure 11); 2. Spring; 3. Gate lock (anchor); 4. Parts; 5. Trough (pipe); 6. Rubber rope or band; 7. Robot arm (manipulator); 8. Cover; f, F – Pressure forces; k – points of attaching 6.

Download free eBooks at bookboon.com

The stacker bin has a slightly tilted bottom ($\angle \alpha_1 < \angle \alpha$ – Figure 12). A slight slope is also provided from C to C_1. Parts 4 are stacked and arranged in the bin in a single layer. Stacked parts are banded by the elastic band 6. The trough 5 starts from "a" and represents a pipe of diameter $d_2 > d_1$(of the part).

1.4.7.2 Operation

Parts 4 are stacked and arranged in the bin 1 under the action of gravity and bin vibrations cause them to move tightly stacked from the band 6 to the end of trough 5 – the opening in point "a" and they fall inside one at a time and move down to the rest "b_1" of the gate lock 3 held in this position by the spring 2. When the robot arm (8) presses on (3) with a force F along X, it rotates around O_1 counter clockwise and releases part 4.2, which falls into the trough and reaches the seat a_1 – position 4.3 where it is picked by the robot arm. Meanwhile, part 4.1 moves in position 4.2 after 4.2 is released, guided by the "tooth" b of 3. The "tooth" b ensures part 4.1 and other parts stacked above it in the trough 5 are kept static while part 4.2 is released.

Output and dimensions

With dimensions A = 400 and B = 400, stacked in a single layer are more than 600 parts, which ensures sufficient supply of parts required for one working shift.

The area of bin occupied by a single type 1 part (Figure 11) is:

$$S_1^{max} \leq d_1^2 = 1.5^2 = 2{,}25 \text{ [cm}^2\text{]}$$

The area of the bin is $S_T = 40 \times 40 = 1600$ [cm^2], where $S_T = A \times B$

The number of inserted parts is: $N_1^{min} = \dfrac{S_T}{S_1^{max}} = \dfrac{1600}{2.25} = 711 > 600$ parts

Method of re-filling

Parts are stacked manually and arranged in the proper way, as shown in Figure 13. Re-filling time approx. 5 minutes in the beginning or end of each work shift.

1.4.7.3 Other applications of the device

The feeder mechanism for part 1 (Figure 11) illustrated in Figure 13 II can also be implemented as an almost horizontal alternative, the X0Y plane, with the trough 5 having a rectangular cross-section. It is also possible to feed parts to a_1 directly (Figure 13). In this case we do not need the gate lock 3 and other elements that go with it. Parts will move thanks to the slight slope ($\angle \alpha_1$) and the elastic band 6 – Figure 14.

Download free eBooks at bookboon.com

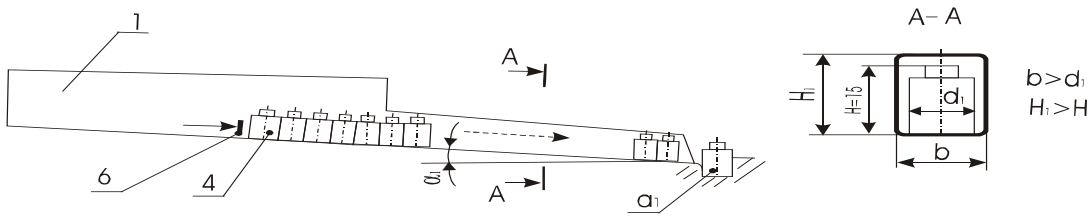

Figure 14

1.5 Assembly cell design

1.5.1 Initial provisions

From the assumed basic assembly stages in the production of the loudspeaker "General strategy": 1a, 2, 3, we can assume that their duration is approximately identical. If we designate these assembly stages as A, B and C, then stage A involving the assembly of the motor unit assembly would be the most complicated and labour consuming operation. The assembly stage B involving the voice coil and suspension assembly comprises less operations and transitions involving mainly manual operations because of the nature and characteristic features of these operations. The situation with stage C – cone and dust cap – is very similar. The cone and dust cap are glued together and the cables from the coil are soldered to the appropriate terminals. These operations are again suitable to perform manually.

Download free eBooks at bookboon.com

Click on the ad to read more

From what we discussed above we assume that each individual assembly cell has three basic working positions where the operations and transitions involved in the three basic assembly stages which we designated as A, B and C are performed.

1.5.2 Organisational arrangement of the assembly line for the current production output

If we consider the current output of the assembly line, 120 000 loudspeakers/month, as indicated in Para 2.1 – (1) T1a = 6 sec. In other words, one finished loudspeaker comes out in every 6 seconds. With the total number of assembly cells NAC = 15 and nWP = 3, as calculated in Para 5.4 (6) "Storage capacity", the general organisational arrangement of the assembly line could be as illustrated in Figure 15.

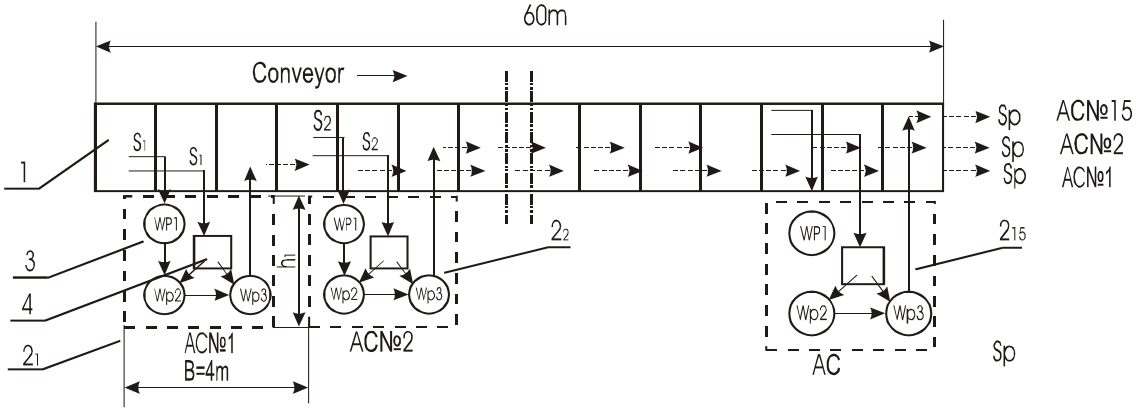

Figure 15

Each individual assembly cell AC No.1 …… No.15 comprises 3 working positions: WP 1, 2 and 3, where assembly stages A, B and C are carried out. In Figure 15: 1 Conveyor; 2_1 …. 2_{15} are assembly cells AC1 to AC 15; 3 working (assembly) positions WP 1, 2,3: 4 is the auxiliary assembly table (reserve stock) with parts required for the assembly operation; $S_{1,2}$ is the movement of parts or pallets (cartridges) with parts arriving at the assembly station.

Working position WP1 performs operations in stage A of the assembly process and WP2 and WP3 – stages B and C. The parts required for each of these working positions arrive as follows: WP2 – from WP 1 and 4, and WP 3 – from WP 2 and 4 and the finished product Sp, loudspeaker, is then placed on the conveyor to be transported to the store.

1.5.2.1 Cycle time of the assembly cell (AC1 … AC15) – T_{AC}

(12) $T_{AC} = 1.5$ [min], since $T_{AC} = N_{AC} \cdot T_{1a}$

$\therefore T_{AC} = 15.6 = 90$ [sec]

(since: $N_M = \frac{T_M}{T_{1a}} = \frac{200.3600}{6} = 120000$ parts/month),

Download free eBooks at bookboon.com

where: N_{AC} = 15 off
T_{1a} = 6 [sec]
N_M = quantity of loudspeakers produced for one month
T_M = working time for one month = 200 hours

1.5.2.2 Dimensions of AC ($_{1 \ldots 15}$)

The area of space occupied (available) by one assembly cell is:

$$S = l^{max} \times h. \text{ If we assumed } h = 1;\ l = \frac{L}{N_{AC}} = \frac{60m}{15} = 4\,[\text{m}],$$

$$S = 4^2 = 16\ [\text{m}^2].$$

1.5.3 Alternative organisational arrangement of the assembly line for the suggested mechanisation – N_M^{max} = 180000/month

According to the developed "General strategy", (Task 2) above and the organisational arrangement illustrated in Figure 8, a mechanised assembly cell can be introduced into the assembly line as illustrated in Figure 16.

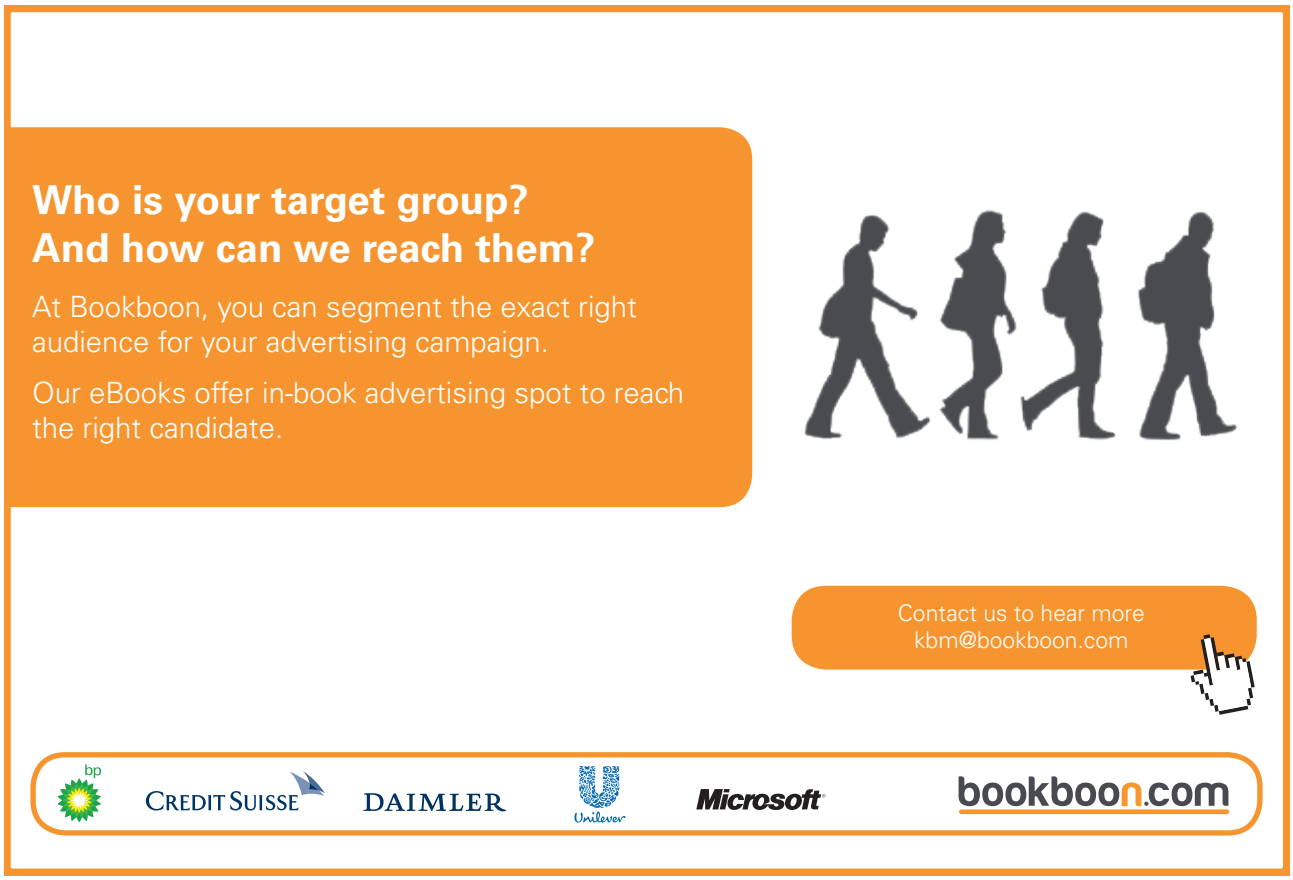

Download free eBooks at bookboon.com

Click on the ad to read more

All assembly cells are located in one line next to the conveyor and one double automated assembly cell MAC1 serves two neighbouring "manual" cells (work stations: AC1 and AC2, etc.) For example: MAC2 → AC3 and AC4, up to MAC 11 → AC21 and AC22. MAC1 … up to MAC11 are as illustrated in Figure 8, Para 4.4.1, with the only difference that they have been doubled to be symmetrical and to provide better organisation in servicing the other (second) "manual" assembly cell. It is not necessary to double the feeder devices a, b, c, d and e (pallets or cartridges with parts) but it would be more convenient if neighbouring assembly cells AC1 and AC2 … up to AC 21 and AC22 assemble two different product variants featuring different size and overall design.

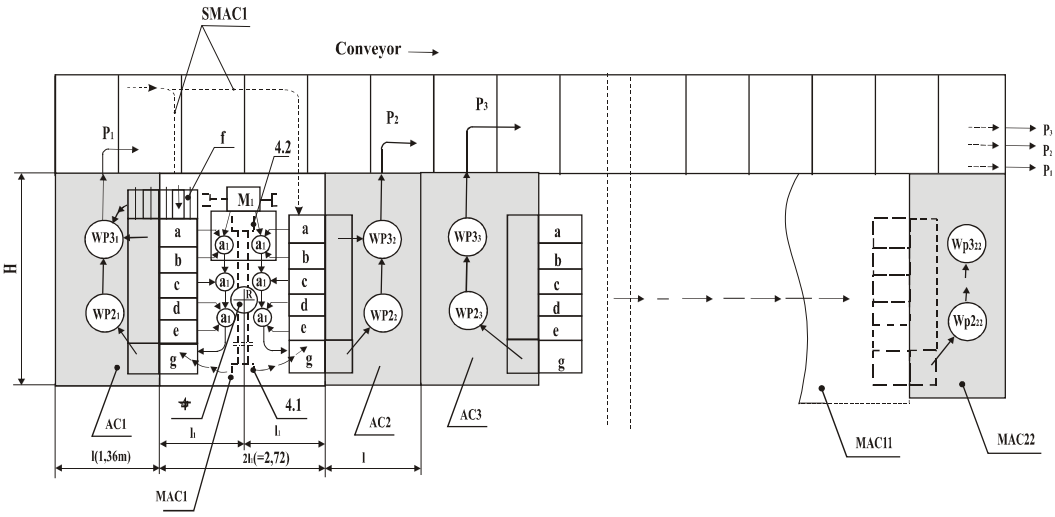

Figure 16: $P_{1 \ldots 22}$ – product (loudspeaker)
SMAC1 … C11 – pallets (cartridges) carrying parts for MAC1 … 11.
MAC1 … C11 – mechanised (automated) assembly cell – total 11 off
Item 4 – Robot ¼.1; 4.2 – Arm grips
M1 – Press or robot 2
g – operational reserve stock for finished "motor unit" assemblies for $WP2_{1 \ldots 22}$
f – auxiliary operational reserve stock for $WP3_{1 \ldots}$
$WP2_{1 \ldots 22}$ – working position for assembly stage "B"
$WP3_{1 \ldots 22}$ – working position for assembly stage "C"
$AC_{1 \ldots 22}$ – manually operated assembly cell – 22 off

1.5.3.1 Operation and features of the introduced flexible mechanised assembly cell MAC (MAC1 ÷ MAC11) – Figure 16

All parts required for MAC and AC cells are delivered by the assembly conveyor and re-filled with new pallets or cartridges at feed positions: a, b, c, d, e and robots item 4 also transfer assembled sub-assembles to AC1 and AC2 … (up to AC 21 and AC 22). The robot 4 also feeds pallets with parts to working positions WP21, $WP3_{1\ldots}$, $WP2_{22}$, $WP3_{22}$. The use of a second robot M1 is also considered to perform some of the assembly operations carried out at $WP3_1$… over the auxiliary tables *f*. Since one mechanised assembly cell MAC serves two AC, the total number of workers serving manual work stations WP2, WP3 …is still 44 for 22 AC (15 workers for an output of N_M^{max} = 120 000/month).

Download free eBooks at bookboon.com

The flow of semi-finished products, as well individual operations and finished products are illustrated by means of arrows.

1.5.3.2 Assembly line output

When $N_{AC} = 22$, $T_{2a} = 4$[sec], $N_M^{max} = 180000$/month

$T_{AC1} = N_{AC} \cdot T_{2a}$ [from para 6.2.1; (2), (2), para 2.2; 2.1]

$T_{AC1} = 22.4 = 88$[sec]

$$N_M = \frac{T_M}{T_{2a}} = \frac{200.3600}{4} = 180000 \text{ units}$$ (T_M is the working time = 200 hours/month)

$N_M = 180000$ units.

The cycle time of an assembly cell comprising AC + ½ MAC is $T_{AC1} = 88$[sec], which is 2 seconds less in exchange for the reduced working time at WP1 or WP2, which is rather possible, since the longest assembly operation is the operation carried out at stage A (motor unit assembly). This is also achieved by performing some of the assembly operations using robot No.2 (M_1) to help WP3 if necessary. The cycle time for MAC = 22 [sec], as indicated in Table 1, column 12 and the cycle time for 2 manually operated assembly cells is = 44 [sec] (AC1 + AC2). A large time reserve is available for MAC – robot 1 (or for MAC in general). $T_{AC1} - 44 = 44$[sec]. It is also possible to additionally reduce the number of MAC to less than 11, which currently represents a reserve for increasing the assembly line output.

1.5.3.3 Assembly line operation for a minimum output of 40 units/hour and a maximum output of 1000 units/hour

1.5.3.3.1 Operation time for stages A + B + C

Without changing the time required for assembly cell AC + ½ MAC to perform assembly stages A, B and C, which we assumed is 1.5 min = 90 sec, then for the minimum volume of assembled products per hour $N_h^{min} = 40$, the time required to make one product T_1 is calculated as follows:

$$(13) \quad T_1 = \frac{T}{N_h^{min}} = \frac{3600}{40} = 90 \text{ [sec]},$$

where: T – is the time period = 1 hour and N_h – is the number of products produced for a time of T.

a) From (13) above we can draw the conclusion that only a single flexible assembly cell will be operating since this time of 90 sec is usually sufficient for it.
b) For $N_h^{max} = 1000$ [units/hour] and from (13) above:

$$(14) \quad T_1 = \frac{3600}{1000} = 3.6 \text{ [sec]}.$$

Download free eBooks at bookboon.com

In this case we can draw the conclusion that 22 AC + ½ MAC are insufficient to meet this production volume (22 . 3,6 = 79,2 [sec]).

The required additional quantity is : T_{AC1} – 79.2 = 88 – 79.2 = 8.8[sec] (T_{AC1} is 88 [sec] from para 6.3.2).

We found out in para 6.3.2 above that MAC has a large reserve of operational time for robot 1 = 44 [sec]. To allow for an output of N_h^{max} = 1000 [units/hour] we shall have to use this spare reserve of 44[sec] with robots 1 and 2 performing some of the operations at stages B and C. In other words, the assembly process shall be such that the time required to perform stages B and C is reduced by a total of 8.8 [sec] and these operations are performed by the mechanised automated assembly cell ½ MAC, which has a spare reserve of unused operational time.

1.5.3.4 Required investment – K

The required investment to incorporate the flexible automated assembly cell illustrated in figure 16 and made up of MAC, can be calculated as the sum of the required funds for inst constituent elements: these include feeder devices, cartridges, etc., a, b, c, d, e; attachments a_1, c_1, d_1, robot(s) item 4 and M1, installation and modification of the assembly layout, etc.

If we assume: K_1 = a . b … e + a_1, c_1, d_1 ≤ 2500 [US Dollars]
K_2 = robot 1 – I off ≤ 5000 [US Dollars]
K_3 = robot 2 (M1) – 1 off ≤ 3500 [US Dollars]
K_4 = other expenses – 1 MAC ≤ 1500 [US Dollars], then

(15) $K_{AC} = \Sigma K_i$
$K_{AC} = K_1 + K_2 + K_3 + K_4$ = 2500 + 7000 + 3500 + 1500 = 13 200 [US Dollars]
K_{AC}^{I} = 14 500 [US Dollars}

(16) $K = K_{AC} . N_{AC}$
K = 13 200 . 11 = 145 200 [US Dollars]
K ≈ 100 000 GB Pounds, where:

K_{AC} – is total investment per single flexible assembly cell in US Dollars
K – is the investment for the assembly line, and
N_{AC} – is the number of assembly cells and N_{AC} = 11.

1.5.4 Analysis and assessment of the assembly cell AO24

The assembly cell AO 24, Appendix 2, is illustrated schematically in Figure 17. This cell incorporates a rectangular conveyor with 4 work tables in all corners and a size of 2m × 4 m. It is equipped with 4 robots operating in a set sequence. The conveyor moves automatically and synchronised with the operation of functioning robots.

Download free eBooks at bookboon.com

Additional work tables e … i are provided for each robot 2 … 4 relevant to the performed assembly operations. These work positions are equipped with special assembly fixtures to facilitate the assembly process.

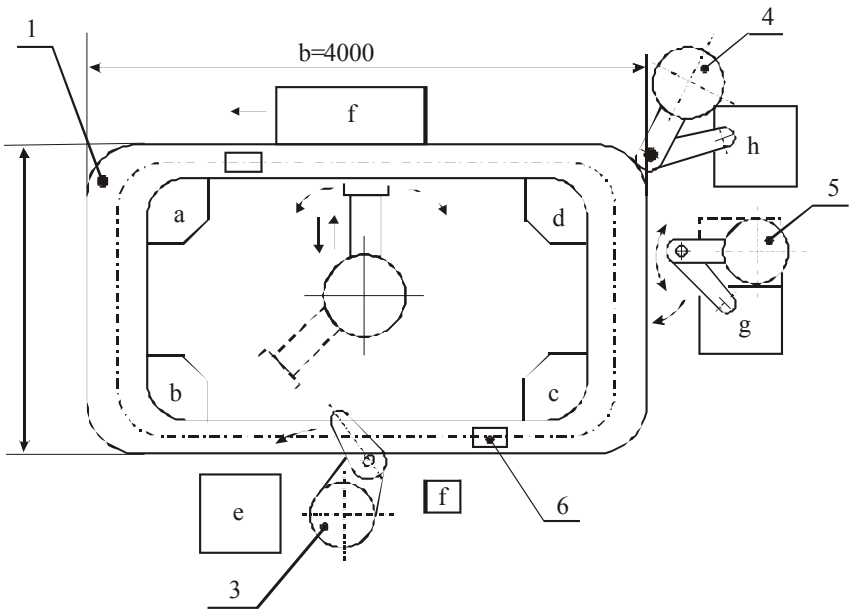

Figure 17: 1. Conveyor – 1 off; 2, 3, 4 and 5 – Robots – 4 off; 6. Moving pallet – ; a, b, c, d – work tables – 4 off; e, f, g, h, i – work tables – 5 off.

Download free eBooks at bookboon.com

Click on the ad to read more

The cell operates with all assembly operations performed by the robots in the corresponding working positions – tables. The assembly operations involved in stages A, B and C (as described in the previous paragraphs) are distributed among robots 2, 3, 4 and 5 relevant to their individual capabilities. Robot 2 is the most widely universal one and can perform loading of the conveyor and unloading of finished products, as well as transfer sub-assemblies to robot 3.

1.5.4.1 Assembly of loudspeakers

If we assume robot 2 can perform assembly operations from stage A of the process – "motor unit assembly", together with the conveyor 1 and robot 3 they can replace the flexible mechanised assembly cell MAC (Figure 18). Robot 3 here replaces M1 (robot 2). Robots 4 and 5 can perform assembly operations involved in stages B and C instead of manually operated WP2 and WP3 in AC.

1.5.4.2 Time to complete stages A, B and C of the assembly process

The time required to complete the operations involved in stage A (p. 6.1) here is again 22 [sec] (Table 1, column 14), but this time could be lower since parts and sub-assemblies are transported between individual robots by the conveyor. This time coincides (flows in parallel) with the time of operation of robots.

If we assume robots 4 and 5 will carry out the operations for stages B and C for 1,5 min, then the total cycle time for the assembly of a single product is $T_{AO24}^{max} \leq 1.5$ min.

Since a large time reserve is available in robots 2 and 3, then:

(15) $$T_{AO24}^{\max} = \frac{T_A + T_B + T_C}{3}$$

$$T_{AO24}^{\max} \leq \frac{22 + 90 + 90}{3} = 67.3 \text{ [sec]}$$

1.5.4.3 Number of AO24 incorporated in the assembly line and production output

We assume a monthly production schedule of N_S = 200 000 units/month.

For T_M = 200 hours $\quad T_1 = \frac{T_M}{N_S} = \frac{200.3600}{200000} = 3.6$ sec, where:

N_S – is the number of loudspeakers, and
T_M – is the monthly amount of working time.

For T_1 = 3.6 [sec],

(16) $N_{AO24} = \frac{T_{AO24}^{\max}}{T_1} = \frac{67.3}{3.6} = 18.69$, so we assume 18 units.

Download free eBooks at bookboon.com

1.5.4.4 Conclusion

With the given data and described conditions, the number of AO24 required to produce a volume of 200000 units/month is 18. It is also possible to achieve this production volume with significantly less AO24 due to the possibility to increase the operation speed of robots 2 … 4 and improve the overall assembly process.

1.5.4.5 Conveyor featuring incorporated AO24

One alternative of incorporating an AO24 into the existing conveyor is illustrated in Fig. 18.

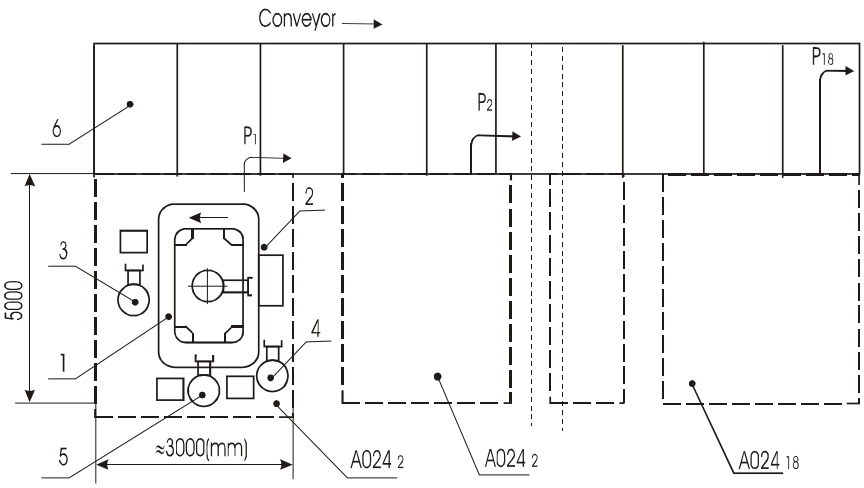

Figure 18: 1 – Conveyor (for AO24); 2 – Robots in AO24; 3 – Assembly line conveyor

References

1. M. Edwards, Robots in industry: An overview. *Applied Ergonomics*, *Volume 15, Issue 1*, *March 1984*, *Pages 45–53*.
2. Abraham Seidmann, Ami Arbel, Reuven Shapira, A two-phase analytic approach to robotic system design. *Robotics and Computer-Integrated Manufacturing, Volume 1, Issue 2*, *1984*, *Pages 181–190*.
3. V.D. Majstorović, V.R. Milačić, Expert systems for maintenance in the CIM concept. *Computers in Industry*, *Volume 15, Issues 1–2*, *1990*, *Pages 83–93*.
4. Jim Lee, Tzvi Raz. Branch-and-bound procedure for robot assembly planning. *Computers & Industrial Engineering*, *Volume 18, Issue 3*, *1990*, *Pages 407–423*.
5. Nicholas Perrone, CAD/CAM, robotics and automated manufacturing and the connection to FEM. *Finite Elements in Analysis and Design*, *Volume 2, Issues 1-2*, *April 1986*, *Pages 125–142*.
6. B. Malakooti, A methodology for the automation of medium or small manufacturing companies. *Computers in Industry*, *Volume 7, Issue 4*, *August 1986*, *Pages 333–341*.
7. K. Dhinesh Kumar, L. Karunamoorthy, Hubert Roth, T.T. Mirnalinee, Computers in manufacturing: towards successful implementation of integrated automation system. *Technovation*, *Volume 25, Issue 5*, *May 2005*, *Pages 477–488*.

Download free eBooks at bookboon.com

8. P.M. Swamidass, M.A. Waller, A classification of approaches to planning and justifying new manufacturing technologies. *Journal of Manufacturing Systems, Volume 9, Issue 3, 1990, Pages 181–193.*
9. Zhao Xiaobo, Katsuhisa Ohno, Properties of a sequencing problem for a mixed model assembly line with conveyor stoppages. *European Journal of Operational Research, Volume 124, Issue 3, 1 August 2000, Pages 560–570.*
10. Nils Boysen, Malte Fliedner, Armin Scholl, Assembly line balancing: Which model to use when? *International Journal of Production Economics, Volume 111, Issue 2, February 2008, Pages 509–528.*
11. R.J. Kuo, C.Y. Yang, Simulation optimization using particle swarm optimization algorithm with application to assembly line design. *Applied Soft Computing, Volume 11, Issue 1, January 2011, Pages 605–613.*
12. Christian Becker, Armin Scholl A survey on problems and methods in generalized assembly line balancing. *European Journal of Operational Research, Volume 168, Issue 3, 1 February 2006, Pages 694–715.*
13. Stefan Bock, Otto Rosenberg, Thomas van Brackel Controlling mixed-model assembly lines in real-time by using distributed systems. *European Journal of Operational Research, Volume 168, Issue 3, 1 February 2006, Pages 880–904.*
14. Zhao Xiaobo, Katsuhisa Ohno, A sequencing problem for a mixed-model assembly line in a JIT production system. *Computers & Industrial Engineering, Volume 27, Issues 1–4, September 1994, Pages 71–74.*

Getting ahead in your
management career

Our expertise in flexible and accessible education and your passion to succeed will enable you to get ahead.

A world-class research university, Leicester offers flexible, innovative courses because we understand that you've got other responsibilities. In fact, we're committed to making sure that everyone in our vibrant community gets the very best experience at Leicester, whether you're on campus or on the other side of the world.

Whether you choose to study one of our specialist Masters' courses, or our AMBA accredited MBA by full-time or distance learning, you will join a global network of similarly minded professionals and be supported all the way.

Get ahead, get in touch
www.le.ac.uk/management
+44 (0)116 252 5377
dladvisers@le.ac.uk

Distance Learning
School of Management
Postgraduate Programmes

University of Leicester

Download free eBooks at bookboon.com

Click on the ad to read more

2 Design of speakers production: assembly line of capacity 180,000/month, 15 product variants

2.1 Introduction

Modern production techniques for medium to large series products or mass production usually involve assembly conveyor lines. They still use hand labour more or less automated. The aim is to have monotonous and similar in type operations or such causing fatigue, stress and production traumas, gradually replaced by automated assembly cycles, means and techniques. This usually widely involves industrial robots and handlers. Higher productivity, lower cost and higher quality of assembled products are usually required here. Recently, latest assembly techniques for simpler or more complicated products in engineering, device manufacturing and electronics involve computer-aided automated assembly means in Flexible Automated Production Lines [1] or other types of automated conveyor lines [2], which provide full automation and human labour replacement.

2.2 Strategy for the "dolly" removal

2.2.1 Speaker design analysis

Let us examine the general design of a standard speaker in serial production and a section along its axis for convenience. It consists of the following parts: (Figure 1)

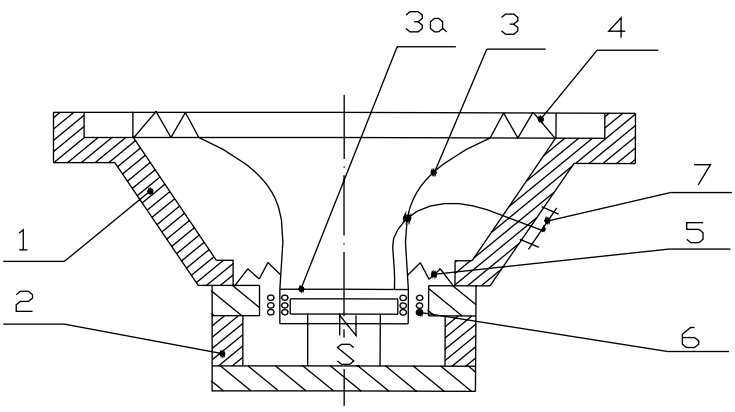

Figure 1: 1. Speaker body case; 2. Magnet system; 3. Conical diaphragm with dust cover (3a); 4. Collar with corrugated concentric folds of the conical diaphragm; 5. Centering oscillator; 6. Voice coil, oscillator; 7. Connection terminals with wires for fixing voice coil.

Download free eBooks at bookboon.com

We could examine the RSW 401/5W, 20Z, 4Ω Loudspeaker shown in Figure 2 for a more detailed view relevant to the particular task for "dolly" removal.

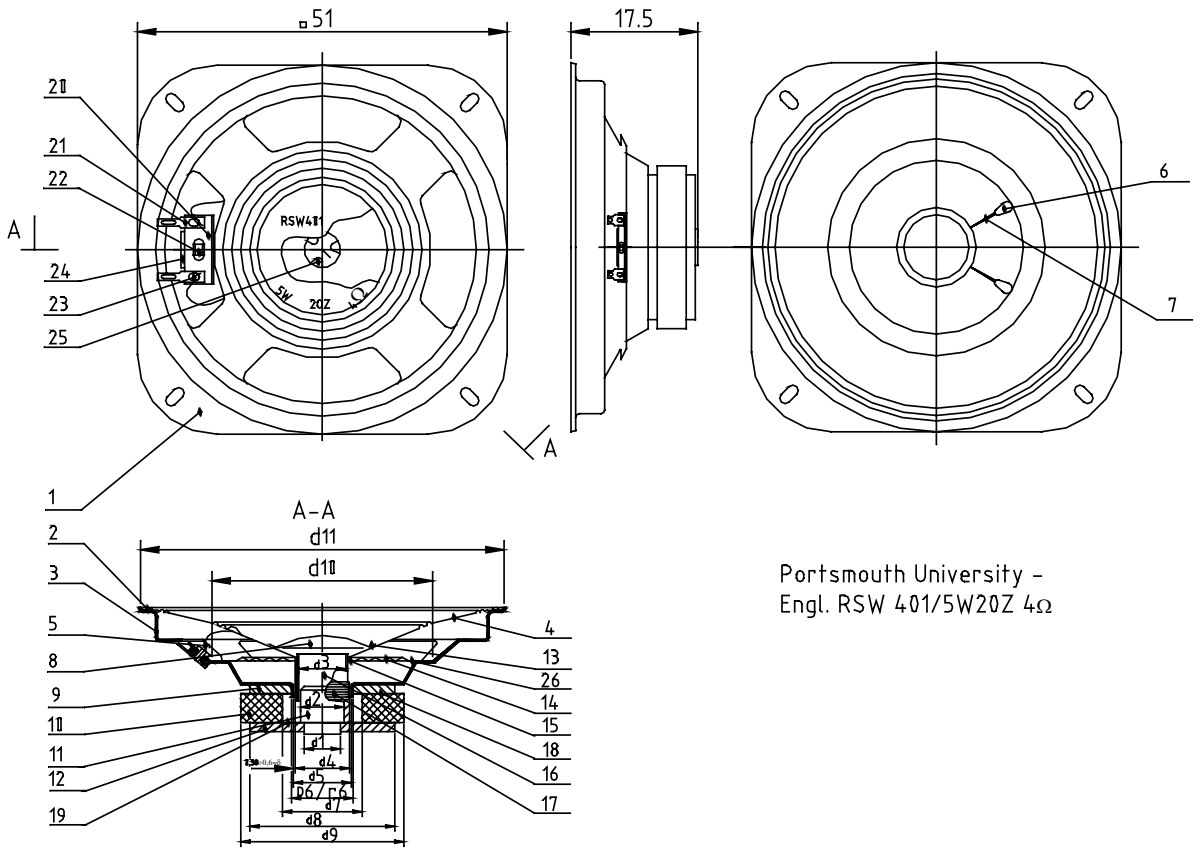

Figure 2

ItemNo.	Name and description	Q-ty
1	Body, speaker support frame	1
2	Rim (collar)	1
3	Adhesive (glued connection between Items 1, 2 and 4)	1
4	Conical diaphragm	1
5	Connection wires, between terminal outputs and oscillator coil	2
6	Soldered connection between Item5 and the wires from the coil 16 with the winding17	2
7	Insulation, for the wires 5 and glue to 4	2
8	Dust cover – oscillator	1
9	Top plate, magnet system (washer)	1
10	Magnet, permanent, ring-shaped	1
11	Central pin – magnet system core	1
12	Bottom plate, magnet system (washer)	1
13	Adhesive, glued connection between 8 and 4	1

Download free eBooks at bookboon.com

ItemNo.	Name and description	Q-ty
14	Centering oscillator, corrugated flat diaphragm	1
15	Adhesive, glued connection between 14 and 16, and 4 and 14	1
16	Coil	1
17	Winding, from an insulated wire of the coil 16 – 4W	1
18	Adhesive, glued connection between 9 and 10	1
19	Adhesive, glued connection between 10 and 12	1
20	Terminal strip	1
21	Terminal	2
22	Rivet, tubular	1
23	Tin solder, soldered connection between 5 and 21	2
24	Protrusion from the body Item 1	-
25	Riveted connection between 11 and 12, depression – 3 off over Item 11	

With us you can shape the future. Every single day.

For more information go to:
www.eon-career.com

Your energy shapes the future.

e·on

Click on the ad to read more

2.2.2 Design description of RSW 401, Figure 2

The speaker body 1 is a conically shaped part stamped of thin steel sheet material and used to support the rest of the speaker component parts as assembled. The collar rim 2 and conical diaphragm 4 are glued to item 3 by means of an adhesive in a ring-shaped groove provided in the upper section of the speaker body. Terminal strip 20 is fixed by means of the tubular rivet 22 to the protrusion 24 cast into the body 1 as stamped. 3 through holes are provided on the terminal strip 20, one for the rivet 22 and two for threading the connection wires 5 to the terminals 21. The wires 5 are soldered to the terminals 21 during the assembly process using tin solder 23. On the other hand, the terminals 21 are riveted to the strip 20 by means of the protrusions provided on them. Glued by means of the connection 26 to the disc-shaped plane in the bottom section of the body 1 is the centering oscillator 14, which represents a flat corrugated diaphragm. This together with the coil 16 and the conical diaphragm 4 is glued in the position 15 (along its ring). Winded on the coil 16, which is a hollow cardboard cylinder, is the winding 17 made up of an insulated wire (4Ω). A small section along axis of the pin 11 of the driving magnet 9, 10, 19 and 11 enters the opening d_3 of the coil during the assembly process allowing for a very small gap of $d_3 - d_2$. A small chamfer ≈1x45° is provided in the pin 11 to facilitate the assembly process. The wire ends of the winding 17 provided on the 16 run up along the axis over the coil, glued and insulated, and come out from the inside of the cone of the diaphragm 4, between the cover 8 and 4, reaching the position 6 where they are soldered together with 5, insulated and glued to 4 by means of 7.

A cylindrical protrusion of very small length of ≈ the washer 9 with a diameter D is provided in the bottom section of the cone of the body 1. The protrusion is fixed (1) to the upper plate (washer) 9 of the magnet 10 by means of a D6/r6-tight connection. 9 and 10 are connected by means of the adhesive 18 during the assembly process just like the bottom plate 12 is connected to the magnet 10 by means of gluing it along the flat 19.

The centering pin 11 of the magnet system is riveted to 12 along d_1 by means of the three deformed sections 25 provided in it. Thus, d_1 is expanded to a larger size diameter thus ensuring a tight connection between 11 and 12.

The correct performance requirement for the loudspeaker is ensured during the assembly of the gap $\delta = 0.38 \div 0.6$*mm, which is* $(d_5 - d_4)/2$.

Additionally, the gap between d_2 and d_3 should be relatively small, i.e. the opening in the coil 16 and the pin 11. This is due to the fact that the coil moves axially in both directions during operation and enters deeper between 11.

Download free eBooks at bookboon.com

2.2.3 Analysis of the assembly operation ensuring the gap "d"

It can be seen from the particular design of a modern loudspeaker examined above that the assembly "dolly" to be removed after the operation should be installed over the winding 17 inside the opening d_5, in other words the nylon thickness is = 0.6mm.

When the magnet is in assembled state 1+9+10+11+12 the "dolly" cannot be removed in the upward direction (section A-A, Figure 2), as the coil 16 has to be glued to the corrugated diaphragm 14. The axial alignment of the coil relative to the axis of the opening d_5 is ensured by the radial displacement of 16 and 14 before the glue 26 has set.

Above considerations define the assembled position of the body 1 at the time of "dolly" removal in the axial direction. Moreover, the magnet system consisting parts 9, 10, 11 and 12 should not be assembled in its position by the time this removal operation is to be carried out or at least the 11 and 12 part of it, which is actually the obstacle for the "dolly" removal. Another alternative is to leave the bottom section of the speaker open until the time when the coil 16 is centered and the "dolly" removed. These considerations significantly predetermine the sequence of individual assembly operations that have to be carried out on the conveyor and the specialised working stations to be provided along its length.

2.2.4 Assembly technique sequence for coil 16 and center oscillator, corrugated flat diaphragm 14 in body 1

The sequence of individual assembly operations could be the following:

Item No.	Designation		Description	Fixture or manually	Time [sec]	Remarks
	Operation No.	Stage				
1	2	3	4	5	6	7
1	I	01	Positioning diaphragm 14 with the coil 16 in the work station	fixture	3	Specialised work post No.1
2	I	02	Installation of dolly on d_4	manually	5	Specialised work post No.1
3	I	03	Applying the adhesive 26 on d_{10}	manually	10	Specialised work post No.1
4	I	04	Positioning body 1 face down on 14 and 16 with the dolly inserted through d7	manually	5	Specialised work post No.1
5	II	01	Moving 1 with 14 and 16 horizontally along with the dolly until dolly engages with mechanical jig	fixture	3	Work post No.1 or besides (or on the conveyor)
6	II	02	Time for glue setting	fixture	10	
7	II	03	Dolly removal in axial direction	fixture	3	Using conveyor movement

Download free eBooks at bookboon.com

2.2.4.1 Diagrams showing assembly operations to be performed – Figure 3

Note: Part designation numbers of the loudspeaker is identical with Figure 2.

1. Operation I, Stage 01

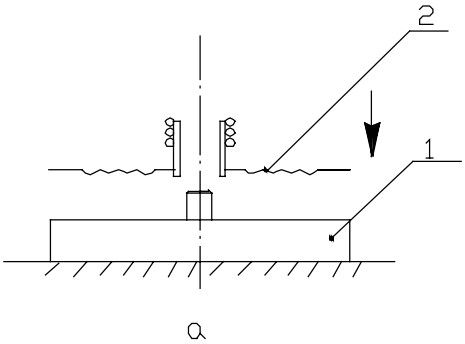

Figure 3a: 1. Fixture in work post No.1 F01; 2. Parts 14 + 16; 3. "Dolly"; 4. Surface with applied glue; 5. Part No.1.

Download free eBooks at bookboon.com

Click on the ad to read more

2. Operation I Stage 02

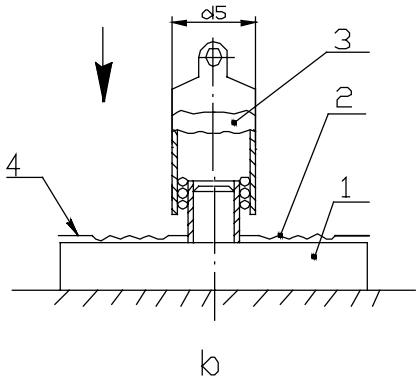

Figure 3b:

3. Operation I Stage 04

Position 3 is fixed – to be held manually until inserted through opening d_5 into part No.1. Pressed to be glued along 4.

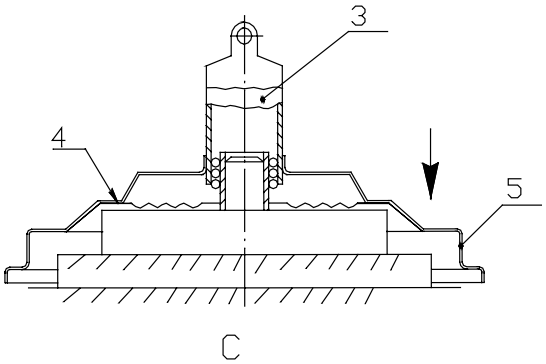

Figure 3c

2.2.5 Concept for mechanised "dolly" removal, Figure 4

Removal of nylon "dolly" from the coil winding and the opening d_5 on part No.1 (Figure 2) could be carried out by means of exerting axial pull action (+Z) using a special pulling device. This device could be installed on work post No.1 or close to it. Alternatively, it could be mounted in the area between work posts No. 1 and No.2; one used for assembling items 1, 14 and 16 of the product and No.2 used for subsequent assembly operations in the assembly process sequence.

2.2.5.1 Description and operation (Figure 4)

When assembly operation I 04 is complete we proceed with operation II 01 with the fixture F01, item 2 moved along with parts 1, 14, 16 and the "dolly" installed over them to Z_1- until inserted into the opening of the horizontal arm 1b of the pulling device. It in turn performs operation II 03 with the arm 1a moving vertically along the +Z axis along with 1b sliding along the guide 1c, which represents a bracket-supported fixed column.

Download free eBooks at bookboon.com

The arm 1a is fixed statically to another column 1e, which is in turn fixed along ±Z. A reel is installed on a pin in the bottom section of the column 1e such that the column 1e slides into two guides 1d, which are in turn fixed to 1c.

Items 1, 14 and 16 are supported to prevent movement along the Z-axis in position Z1by the support 6.

2.2.6 Using conveyor movement for the removal of the "dolly" (Figure 4)

The lever, column 1e moves vertically in the +Z direction after the reel 1f contacts the slanted "lifter" plane 5 mounted on the conveyor's side. Items 1f, 1e, 1a and 1b move by gravity and forced by the "dolly" and the tension spring 1g.

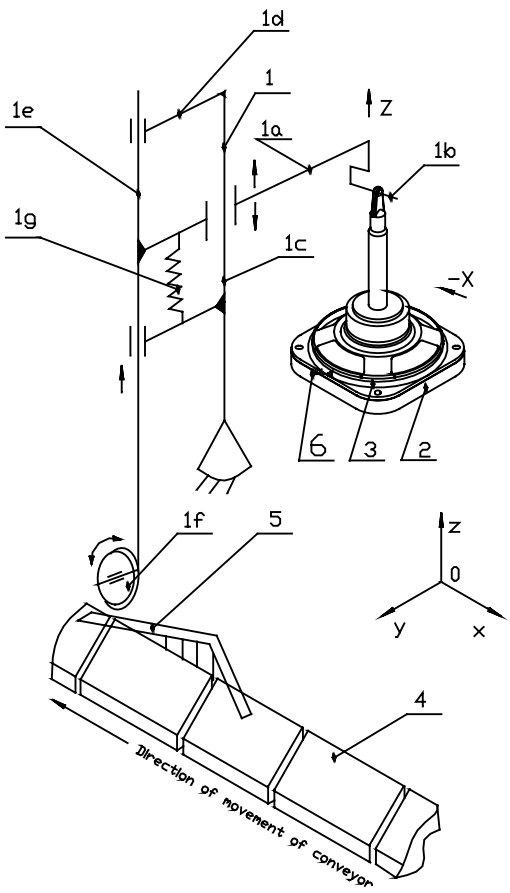

Figure 4: 1. "Dolly" removal device
2. Assembly fixture for items 1, 14 and 16 of the loudspeaker
3. A certain (model of) product having items 1+14+16 assembled on it
4. Conveyor (assembly line)
5. Lifter (slanted double plane)
6. Support along the Z axis

1a to 1g are components constituting the removal device (Item 1 above)

Download free eBooks at bookboon.com

2.2.7 Possible organisation of work posts No.1 and No.2 and mounting of the "dolly" and the conveyor (Figure 5)

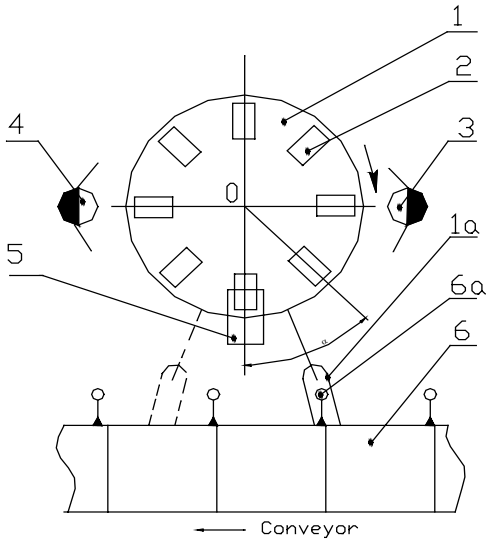

Figure 5: 1. Work table between 3 and 4
2. 1 to n-number fixtures for performing assembly operation I (Table 1)
3. Work post and operator No.1
4. Work post No.2 (for subsequent assembly operation(s)
5. Dolly removal device according to item 1.5 and figure 4 above
6. Conveyor or assembly line

1a, 6a – parts from 1 and 6

Download free eBooks at bookboon.com

Click on the ad to read more

2.2.7.1 Description of operation

Operator No.1 performs assembly operation I 01 thru 04 on 1 and 2. The conveyor provides angular movement of 1 – a Geneva stop 1 along with the parts and (F01) 2 via the yokes 1a and reels 6a. The number of items 2 and the size of the angles α correspond to the time necessary for the glue to set and the speed rate of the conveyor so that there is sufficient number of semi-finished products available for operator No.2 to proceed.

2.3 General strategy

2.3.1 Analysis of the assembly process techniques

In order to be able to assess the suitability of the conveyor assembly technique for a specified product, such as the loudspeaker in this case, and the automation possibilities available for the particular process it is necessary to first make more detailed differentiation of individual assembly operations [3]. Additionally, it is also necessary to consider individual assembly stages in view of duration, performance complexity, and time and location relationship with other operations along with their economical evaluation. It is a well-known fact that for many products significant portion of assembly operations is still hard to be automated or assisted by robotics [4].

Manual handling is still a preferred process technique for many of them. Using industrial assembly equipment, handling machines or robots makes many operations impossible or hard to perform or such automation proves to be economically inefficient and is therefore considered groundless and useless [4]. An example of such operation, for example is the insertion and fitting of more than a single component simultaneously or when this necessitates complicated cycle movements. There are also a number of components requiring some additional operation, such as holding the component in place, deburring of edges, welding or soldering in hard to access locations [5].

Other operations considered hard to be fully automated or mechanised are applying a specified quantity of adhesives or pastes, threading very thin wires through holes drilled in advance, etc. From the above differentiating analysis of the subject, i.e. assembly components, we could draw up a preliminary general but still very necessary evaluation of their suitability for automated assembly techniques.

The technical characteristics of various assembly components comprise: the structure and characteristics of the subassembly, interconnections between individual elements, types of connections and fastening means between parts. General requirements could also comprise the following: the design of the product should allow for the assembly to be performed in complete interchange ability of individual components and on a continuous basis [6]. Dimensional tolerances should also allow for interchange ability between components and avoid operations, which are considered hard to perform, such as twisting wires, spring washers, spilling resins or plastics, etc. Some fragile and tender elements are also considered hard to be involved in automated assembly techniques, as is the case of the oscillator coil. This would require very precise alignment and avoiding possible damage [6].

Download free eBooks at bookboon.com

In order to be able to make a preliminary visualised estimate of the loudspeaker's suitability for automated assembly techniques I made up the following "Assembly analysis chart" (Table 2). A detailed consideration of all required assembly operations and additional handling transitions could help us in our precise and good-quality selection of the types of operations, which are most suitable for automated assembly [7].

Additionally, preliminary information has been compiled for the connections between individual operations and the transitions between them in view of time and location, as well as duration, suggested automation equipment required, such as devices, machines, tools, and robots. This analysis provides grounds for drawing up an organisational chart and a work post layout diagram for the location of individual workstations along the conveyor. This also provides data for production capacity evaluations, conveyor speed rate estimations and assessment of some other technical and economical parameters [7].

2.3.1.1 Assembly analysis chart, Table 2. Selecting a suitable assembly stage, which can be efficiently automated

The assembly process flow model, which was selected for the Mod. RSW401 loudspeaker and visualised in the above Table 2 gives clear picture of the specific features and suitability of individual process stages A, B, C, (D) (A1) for automation.

The process stage in Table 2 and the described above in p.2.1, which is the most suitable to involve some automated assembly techniques is stage A (group A). The reason for this selection is that this stage involves mainly rotational regular-shaped components and convenient and sufficient in number base planes and planes suitable to be supported in automated handling devices [8]. Moreover, handling units will feature very simple design. The additional small stage D allows for some savings in operational time and multi-position assembly operation (possibility for simultaneous assembly of more than a single set).

The stage, which is considered most unsuitable for automation in this particular case is the stage B (group B components) and this is due to the high precision required in the positioning of the components being assembled and possible damage of coil winding. The stage C operation (group C components) is also considered easy for automation but the design of the handling devices involved in component transportation and positioning during assembly could prove rather complicated due to the low weight and easily deformable "collar" rim 2, conical diaphragm 4 and 8 (Figure 2). Vacuum grips could be used here but the applied adhesive or adhesive plastics could lead to unreliable automated operation cycles [9].

Download free eBooks at bookboon.com

Assembly analysis chart

Legend:

yes +; no -; 9+10 sub-assembly of part items 9 and 10 or other part Nos.; Part numbers are as per Figure 2; The plane is the (X0Y) plane; LS – RSW401 loudspeaker

No	Designation		Description of the stage, operation, sub-stage or handling	Possible ways of performing			Tool, fixture, machine based on:	Time and location link with other assembly operations				Use of conveyor movement	Transport link-movement between work posts		Approx. duration sec.	Remarks and additional data
	operation	Substage		manual	automate	robot		before	simult.	after	workpost		from	to		
1	2	3	4	5	6	7	8	9	10	11	12	13	14	15	16	17
	I	**A1**	**The STAGE of assembling the 1drive unit 1,9,10,11,12 Gluing 9 and 10 (assembly)**													Group consisting of part Nos. 1,9,10,11,12 (sub-assys. 9+10 and 11+12)
1	I	01	Feeding 9 to fixture from the pallet	+	+	+	Fixture, plane and d_8	+	+	+	No3	-			4	Picking manually or by a handling device
2	I	02	Applying glue to 10 along the $d_8 - d_7$ plane	+	+	+	Fixture or applicator	+	+	+	No3	-			6	Sub-stage includes picking from Pallets
3	I	03	Positioning over 9 and pressing	+	+	+	I01 fixture, d_9 and the plane	+	+	+	No3	-			3	
4	I	04	Remove 9+10 and store in a pallet (or on conveyor)	+	+	+	Manually or by handler	+	+	+	No3	-			3	Time needed for the glue to set is not included in the duration time
	II	**A2**	**Assembling 11 and 12**													
5	II	01	Feeding 11 to the fixture from a pallet	+	+	+	Fixture, face and d_2	+	+	+	No3	-			4	
6	II	02	Picking 12 from pallet and positioning it on 11	+	+	+	Based on the support of 11 and d_1	+	+	+	No3	-			6	
7	II	03	Riveting through plastic deformation along face d_1	+	+	+	Press tool	+	+	+	No3	-			6	Manual or mechanically operated Press
8	II	04	Remove from press and put in a pallet	+	+	+	Manually or mech.handler	+	+	+	No3	-		No1	3	Possible to transfer it to No.1 with out pallet
	III.	**A3**	**Assembling 1 and 9+10 along the H6/r6 connection**													
1	2	3	4	5	6	7	8	9	10	11	12	13	14	15	16	17
9	III	01	Picking 9+10 from pallet (or conveyor) and position it in the press	+	+	+	Fixture based on d_9 and the plane			+ I	No2	-			4	
10	III	02	Picking 1 from pallet and position it on 9+10	+	+	+	Fixture based on H6/r6				No2	-			5	

Download free eBooks at bookboon.com

11	III	03	Plastic deformation of 1 till H6/r6 is achieved; put in pallet	-	+	-	Press tool, hydr. Press		+	+	No2	-		No2	7	Mechanical or hydraulic press
	IV		STAGE D – Assembling the Terminal strip 20, 21, 22, 23							III						
12	IV	01	Picking from pallet and fastening 2off terminals 21 to 20	+	-	+	Tool, manually or with press	+	+	+	No2	-			12	Manual or mechanically operated press using el. motor, air, etc.
13	IV	02	Riveting strip 20 on the body 1 (1+9+10)	+	+	+	Tool, manually or with press	+	+	+	No2	-	No3		8	
14	IV	03	Soldering wires 5 to terminals 21 – 2off and 23	+	_	_	Soldering tool	+	+	+	No2	-	No1		10	
			STAGE B – Assembly of voice coil and support 1, 14, 16							I, III, IV						
	V		Assembly of diaphragm 14 and coil 16								No1					
15	V	01	Picking 16 from pallet and position it on work post	+	-	-	Fixture, d4 and face	+	+	+	No1	-			3	
16	V	02	Picking 14 from pallet and position it on work post	+	_	_	Fixture, d4 and face	+	+	+	No1	-			5	
17	V	03	Applying adhesive along contact rim surface (d4)	+	-	-	Fixture, brush and applicator	+	+	+	No1	-			6	
	VI		Assembling 14+16 and 1							I, III, IV, V						
18	VI	01	Picking 14+16 from pallet and position it on the work post	+	-	+	Fixture based on d3 and the plane	+	+	+	No1	-	No2		4	Operation I01 from para 1
19	VI	02	Position the "dolly" over 16	+	-	+	Fixture based on d3 and the plane	+	+	+	No1	-			8	Operation I02 from para 1
20	VI	03	Applying adhesive on 14 along d10	+	-	+	Fixture based on d3 and the plane	+	+	+	No1	-			5	Operation I03 from para 1
1	2	3	4	5	6	7	8	9	10	11	12	13	14	15	16	17
21	VI	04	Picking from pallet, inserting "dolly" in d5 and positioning on 14 + 16	+	-	+	Fixture based on d3 and the plane	+	+	+	No1	-			6	Operation I04 and II04, para 1
22	VI	05	"Dolly" removal along Z axis	-	+	+	Fixture, F01 and conveyor	+	+	+	No1	+		No2	4	Operation II03 from para 1
			STAGE C Assembly of cone and dust cover 4, 2, 8 and 1							I, III, IV, V, VI						

Download free eBooks at bookboon.com

	VII		STAGE C Assembly of cone and dust cover 4, 2, 8 and 1													
23	VII	01	Picking 1 from pallet and positioning in work post	+	+	+	Fixture, oriented along the 102 sq.	+	+	+	No2	-	No1		3	
24	VII	02	Applying adhesive – d11	+	+	+	Fixture, brush or applicator	+	+	+	No2	-			6	
25	VII	03	Picking 4 from pallet, advancing towards 1 and threading wires 5 – 2off through holes in 4 Positioning on 1	+	+	+	Manually or with mechanical handler along d11	+	+	+	No2	-			7	
26	VII	04	Picking 2 from pallet, applying adhesive along d11 and positioning on 4	+	+	+	Fixture, brush or applicator	+	+	+	No2	-			6	
27	VII	05	Soldering wires 5 ends in position 6 – 2off and bending	+	_	_	Soldering tool	+	+	+	No2	-			10	
28	VII	06	Positioning in pallet	+	+	+		+	+	+	No2	-		No1	3	
		A4	STAGE A4 Additional assembly of 11+12 into the speaker 6 and control								No1		No2			
	VIII		Assembly of 11+12 into the speaker								No1					
29	VIII	01	Picking 11+12 from pallet and positioning on fixture	+	+	+	Fixture, based on d8 and radial fastening	+	+	+	No1	-			5	
30	VIII	02	Applying adhesive along face surface of 12	+	+	+	Fixture, brush or applicator	+	+	+	No1	-			4	
31	VIII	03	Picking speaker from pallet and positioning on 11+12	+	+	+	Fixture, based along d9	+	+	+	No1	-			5	
32	VIII	04	Insulation of 6, control and positioning in pallet	+	+	+		+	+	+	No1	-			5	

2.3.2 Recommendation for a suitable automation process for stage A (components group A)

2.3.2.1 Concept for a general diagram of the automated assembly process A (stage A)

Components are assembled (according to the example technique in Table 2) in 3 separate sub-stages; first parts 9 and 10 are glued together to form one unit and this is stage A1, then parts 11 and 12 are subsequently or in parallel with A1 riveted together and this is sub-stage A2; and finally, sub-assembly 9+10 is installed in the body 1 in the third sub-stage A3. Moreover, all three sub-stages are carried out in a single work post No.3 using three separate fixtures. Two auxiliary devices should be available at this workstation to provide for the riveting and adhesive-applying operations and intermediate operation time should also be allowed here for the glue to set. One final sub-stage is also carried out apart from sub-stages A1, A2 and A3, sub-stage A4. This provides final assembly of the drive unit. Due to the specific overall assembly operation sequence this sub-stage is actually carried out in a different work post No.1 and is therefore disregarded from our proposed automation scheme.

Download free eBooks at bookboon.com

Essence of the idea for efficient automation

All components involved in the sub-assembly operations in sub-stages A1, A2 and A3 (sub-assemblies A1, A2 and A3) are rotational and simple in shape. Therefore, they can be fed to the specified location, the assembly fixture, and inserted into it automatically (without any manual actions) using two simple and conventional methods. One is to feed them along troughs positioned at a certain angle or horizontally by rolling or sliding them by gravity or using relatively simple pushing devices. Alternatively, them could be arranged in a column along the trough's length, one after the other. Examples of such "catcher" troughs are available at bearing manufacturers and spring feeding is similar or identical to bullet feeding in machine guns.

a) End actuator

The components being thus fed to the assembly fixtures should be inserted in regular small time intervals into the specified number of specific type (stage A1, A2 and A3) assembly fixtures moving underneath. These fixtures are then moved to the adhesive applicator or the fast-acting riveting press. Once sub-stages A1, A2 and A3 are completed the assembly fixtures can then be further transferred to feed their sub-assemblies into the next work post, WP 2 in this case. This is accomplished by means of releasing assembled, glued and riveted sub-assemblies 9+10 and 11+12 from their assembly fixtures in a location close to work post WP2 by means of a simple release mechanism. Parts 9+10 should have before that been released or fed to assembly fixture No.3 at work post WP1 in order for the sub-assembly A3 to be completed, assembling the body 1 and 9+10 (sub-assembly A1).

Is your recruitment website still missing a piece?
Bookboon can optimize your current traffic. By offering our free eBooks in your look and feel, we build a qualitative database of potential candidates.

Contact us to hear more
kbm@bookboon.com
bp CREDIT SUISSE DAIMLER Unilever Microsoft bookboon.com
Download free eBooks at bookboon.com
Click on the ad to read more

The role and functions of the operator at work post WP3

The function of the operator at this workstation will be to fill in the component input bins feeding the feed troughs from the pallets they are supplied in. Additionally, he will have to manually load assembly fixture No.3 for assembling the 9+10 sub-assembly into the body 1(or only monitor this operation), monitor the assembly operation and transfer movement and start and stop automatic fixtures and devices, machines (press) and auxiliary devices whenever considered necessary.

b) Involvement and function of the flat linear conveyor belt

The conveyor belt may in this case be only used for some additional auxiliary actions, such as to provide the transportation link between individual work posts in relation to their location along the conveyor and the assembly cell itself. From the analysis made in Table 1 we can conclude that the assembly cell area for a single type or model of loudspeaker products is obviously made up of three work posts (operator workstations) furnished with all necessary automated fixtures and means, which should be positioned close to each other. The conveyor belt could therefore be used to transport finished loudspeakers to the end of its length ready to be transferred into the finished products store. Alternatively, the conveyor belt could be used to drive auxiliary turntables rotating around one central axis and supporting specific assembly fixtures, or to actuate the fixtures (devices) themselves. A similar idea was discussed in p.1 above for the "dolly" removal device and this now proves sufficient or even particularly applicable to provide for the transportation link between work posts 3, 2 and 1 and back.

c) Feeding and storage of individual component parts

As we mentioned earlier, component parts are normally supplied in individual pallets in quantities sufficient to provide for feeding a specified duration of an operation cycle. Additionally, parts are arranged or fed into pallets or storage rack cells in the intermediate transfer course of the assembly process between stages A1, A2 and A3. The movement between work posts WP1, 2 and 3 is through an auxiliary transportation turntable providing automation to the whole process. Some manual transportation or movement of pallets with component parts is also possible here when small distances are concerned in large time intervals.

d) Possibilities to speed up assembly operations

Apart from the general assembly diagram discussed above and involving continuously or step-moving fixtures with nests or bases for performing the required assembly operations involved in sub-stages A1, A2 and A3, this concept also allows for another assembly arrangement involving multi-station fixtures for a single stage of each assembly operation. For example, if component parts 11 and 12 are arranged in one 1 to n-station fixture, the press having the same number of riveting positions will perform the riveting operation simultaneously on all of them thus saving a considerable amount of operation time.

Download free eBooks at bookboon.com

The idea discussed in p.2.2 above could be illustrated as shown in Figure 6.

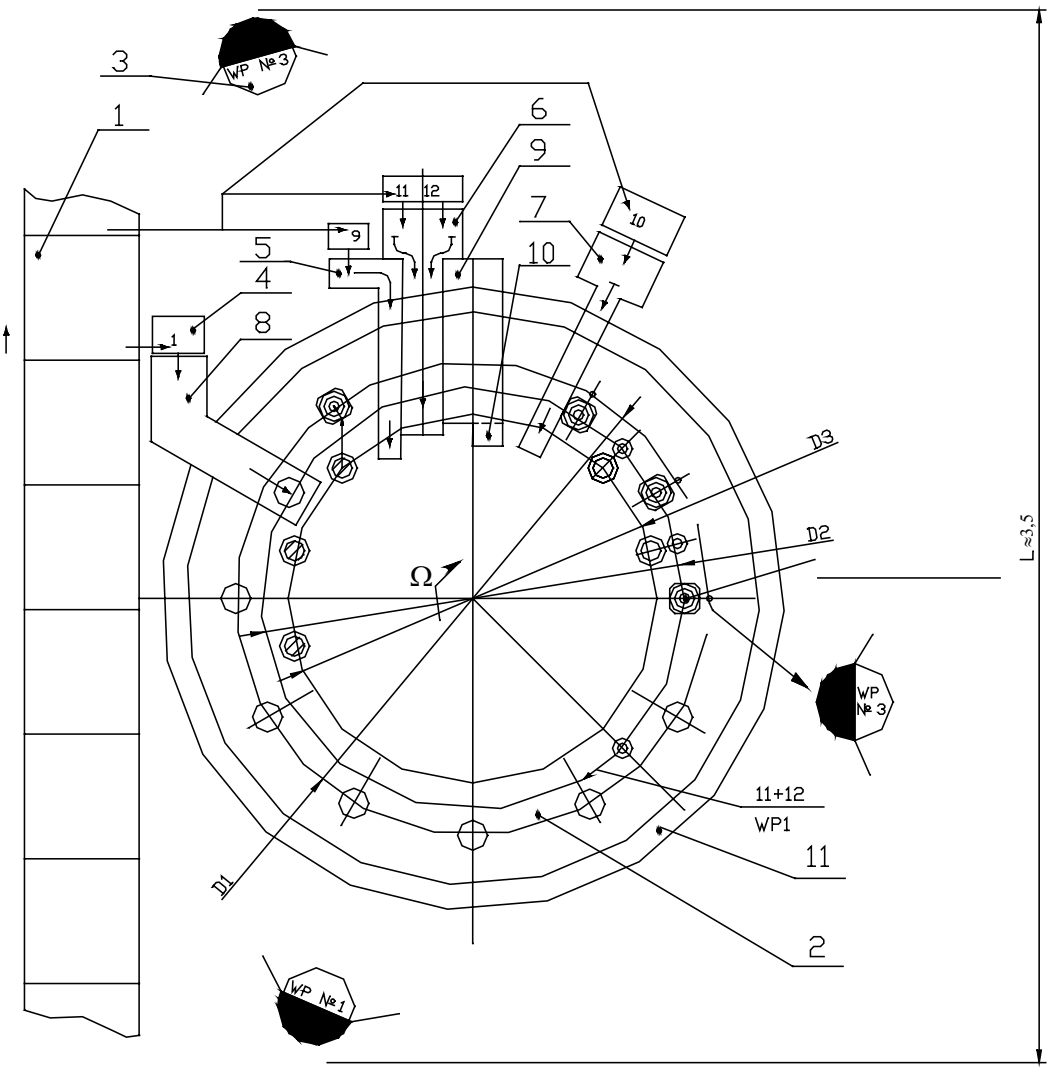

Figure 6: 1. Conveyor; 2. Turntable; 3. Work posts WP 1 thru 3; 4. Pallets filled with component parts 1, 9, 10, 11 and 12; 5. Feed-in bin and trough for part 9 towards D3; 6. Feed-in bins (2 off) and trough for parts 11 and 12 towards D2; 7. Feed-in bin and trough for part 10 towards D3; 8. Feed-in bin and trough for part 1 towards D; 9. Press (for D1 and D2); 10. Adhesive applicator (for D3); 11. Disc-shaped platform for transportation of pallets, component parts, tools, etc. or for the installation of F01 (fixture for "dolly").

Arrows indicate the directions of movement of component parts and transportation links. The operator at WP3 fills in the bins 5, 6, 7 and 8 from pallets 4 with component parts 9, 11, 12, 10 and 1 respectively (designations are according to Figure 2). Component part 9 moves along the feed trough of 5 and goes into the assembly fixtures positioned on D3 onto the turntable. Device 10 applies the adhesive and device 7 feeds in the other component part 10 in an identical or similar way. The movement of the turntable transfers assembled parts 9+10 to a location close to 8, where part 1 is fed in the same way (or manually) via the bin 8. The part 1 and bin 8 are positioned on D1 and sub-assembly 9+10 is taken from D3 and positioned into part 1. Further on, the punching press 9 performs operation III (Table 2) and sub-assembly 1+9+10 is then directed towards WP2.

Download free eBooks at bookboon.com

2.4 Feeder design

Para 2 above describes the basic principal elements of feeder mechanisms. There are 5 types of feeding bins with troughs for transferring component parts to the locations where they are to be assembled. Therefore, we shall need to consider design ideas and details for each individual feeding device intended for each of these 5 different component parts. Axis Y is perpendicular to drawing plane [10].

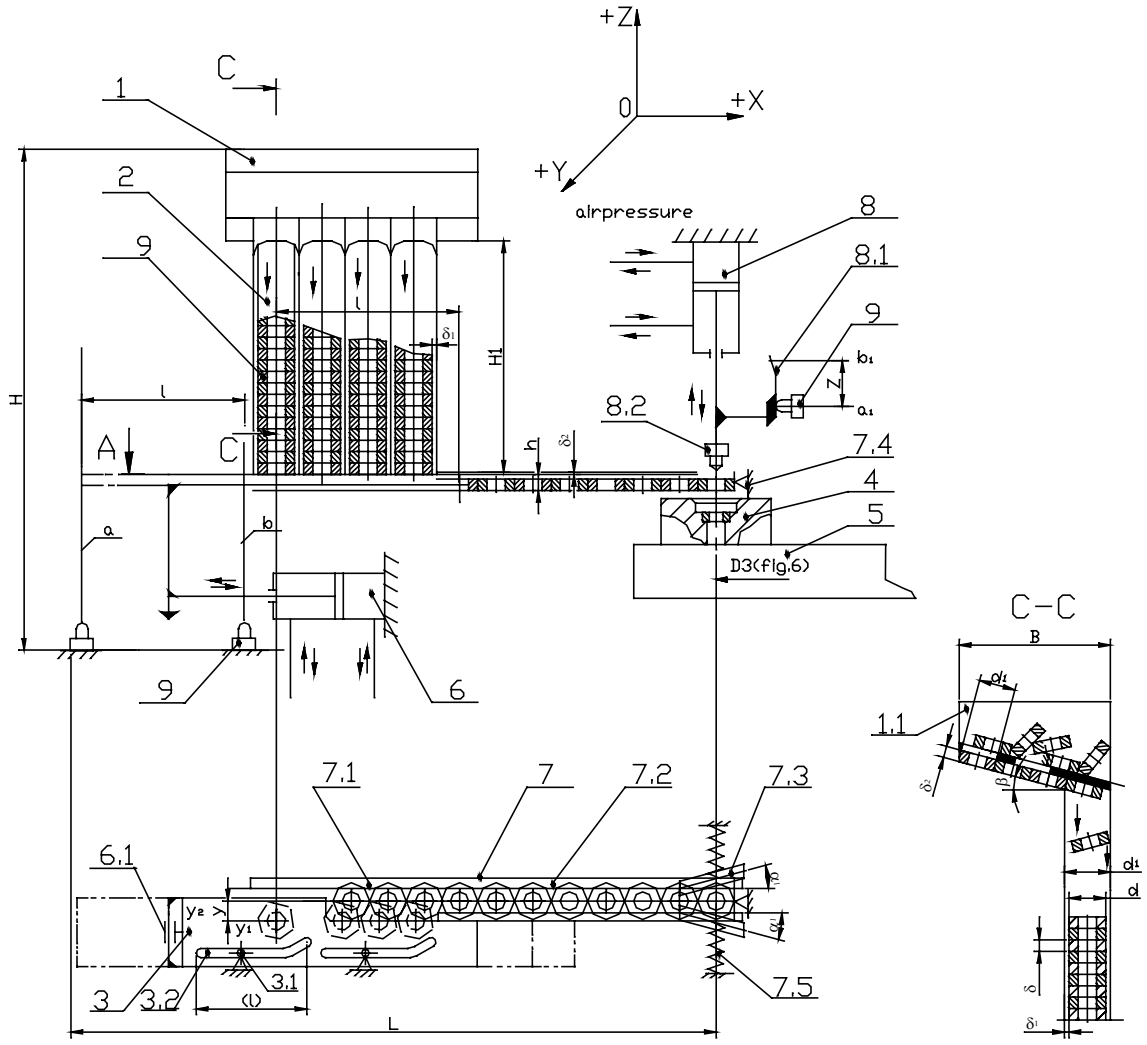

Figure 7: Direction of the arrows shows: – direction of movement of component parts; – direction of movement of mechanisms; – compressed air fed to the pneumatic cylinders.

Component part 9 "Magnet system top plate (washer)" is the most convenient and suitable part to be used in the described method of feeding into the assembly fixture and subsequent assembling performed on the turntable. Figure 7 shows the design idea of such type of feeding mechanism.

Download free eBooks at bookboon.com

SPECIFICATION

for Figure 7

No.	Item No.	Description	Qu-ty	Notes
1	1	Bin for component parts (part 9)	1	
2	1.1	Slope partition	1	Bottom with openings
3	1.2	Vertical partition	5	
4	2	Column	4	d_1 dia tubes
5	3	Pusher	1	
6	3.1	Reel, guide	2	
7	3.2	Profile groove	2	
8	4	Assembly fixture	12	On 5
9	5	Work table	1	Turntable
10	6	Cylinder, horizontal	1	Along X-axis, pneumatic
11	6.1	Slide	1	Along ±y axis
12	7	Trough	1	
13	7.1	Guide, top	1	
14	7.2	Guide, bottom	2	
15	7.3	End plate	2	
16	7.4	End support	1	Stop along X
17	7.5	Spring	2	
18	8	Cylinder, vertical	1	Along Z axis, pneumatic
19	8.1	Switch	1	Flat cam
20	8.2	Assembly punch	1	
21	9	Electrical circuit breaker	3	

A, b, a_1 b_1 – end positions of 6 and 8. Z is the movement of 8.

Download free eBooks at bookboon.com

2.4.1 Description of Figure 7

The movement of part No.9 (Figure 2) is shown in Figure 8 underneath:

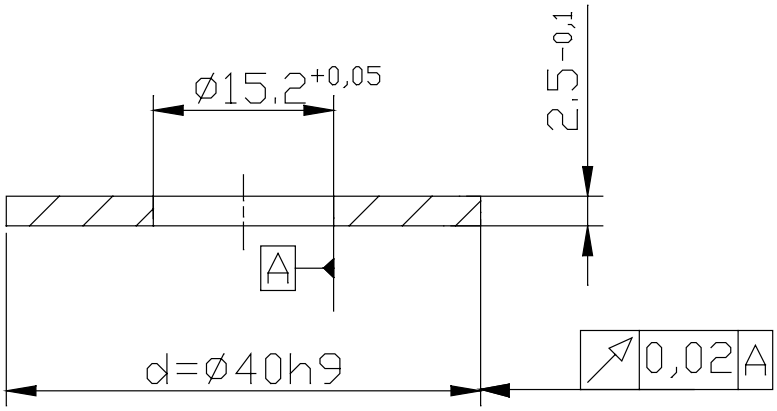

Figure 8: Washer (top plate); Material: Steel

Turning a challenge into a learning curve.
Just another day at the office for a high performer.

Accenture Boot Camp – your toughest test yet

Choose Accenture for a career where the variety of opportunities and challenges allows you to make a difference every day. A place where you can develop your potential and grow professionally, working alongside talented colleagues. The only place where you can learn from our unrivalled experience, while helping our global clients achieve high performance. If this is your idea of a typical working day, then Accenture is the place to be.

It all starts at Boot Camp. It's 48 hours that will stimulate your mind and enhance your career prospects. You'll spend time with other students, top Accenture Consultants and special guests. An inspirational two days packed with intellectual challenges and activities designed to let you discover what it really means to be a high performer in business. We can't tell you everything about Boot Camp, but expect a fast-paced, exhilarating and intense learning experience. It could be your toughest test yet, which is exactly what will make it your biggest opportunity.

Find out more and apply online.

Visit accenture.com/bootcamp
• Consulting • Technology • Outsourcing

accenture
High performance. Delivered.

Download free eBooks at bookboon.com

Click on the ad to read more

A feed mechanism provides for the movement of component parts from the parts feeder bin 1 towards the assembly fixture 4, which performs the assembly with part 10 (Fig.2). A hopper bin for component parts 1 is located on 4 (up to *n*-number) vertical columns, d_1 inner diameter tubes and the hopper bin bottom is positioned at an angle of β. A second bin bottom with openings d_1 provided on it in several rows located horizontally (to the β angle) is positioned at a distance $\delta_2 \approx \delta + 0.5$mm. The axis of the second bottom plate coincides with the axis of columns 2. A knife-shaped pusher 3 is positioned horizontally in the lower section of the columns 2, underneath them.

The pusher 3 is connected and moved in the horizontal direction ± x by means of the power cylinder 6. The columns 2 are supported above the guide trough 7 transferring component parts towards the axis of the fixture 4. Component parts are located in position into the trough by guides 7.2 underneath and by end plate 7.3 (2 off) in the assembly fixture position. The assembly punch 8.2 is located along the axis of 4 and above the part, which is currently positioned for assembly and its movement is ensured by the cylinder 8 having control elements 8.1 and 9. Longitudinal profile grooves 3.2 are provided along the x axis of 3 and guide reels 3.1 are positioned into these grooves their datum surface being the structure of columns 2 (and the entire unit). Cylinder 6 is connected to 3 by means of the slide 6.1, which also provides movement along the y-axis.

2.4.2 Operation, Figure 7

Component parts 9 are filled into the bin 1 from a pallet positioned and located independently. When stirred by hand (or automatically) some of them enter the d_1 openings provided in the slope partitions, the bottom 1.1, the diameter of the openings being slightly larger. The parts are then arranged one after the other along the slanted grooves with the vertical walls 1.2 acting as side stops (along the y-axis). Then they slide down the slanted bottom by gravity (angle β) until they enter one of the columns 2 piling and locating with their plat surface, the X0Y plane, in the columns until columns are full to the top. The horizontal pusher 3 with cam grooves 3.2 guided by the reels 3.1 moves along +x at a distance of l in the bottom section of the columns 2 in accordance with the cycle of feeding component parts to 4. First, it pushes four parts between $y_1 - y_2$ in the – y direction to a y distance and then it pushes the entire row (4 parts) into the trough 7.

Under this action the parts cannot lift up and go back to 2 once they move to the distance –y held there by the side guide 7.1. The parts are further guided along the trough by its side walls, supported on the bottom side by the guides 7.2 horizontal surfaces, slide along the trough and stop in the assembly location of 4. When the cylinder 8 actuates it presses down part 9 by means of the punch 8.2. The moving sections 7.3, "end plates" then open thus causing the springs 7.5 to compress to an angle of α_1 ($2 \times \alpha_1$) and the component part thus descends into the – Z direction entering the seat provided for it in 4. The diameter of the seat is slightly larger than d to provide for 0.02 A (Figure 8). Additionally, part face is slightly above the datum surface for part 10, for example: +0.5+0.2. The cylinder 8 actuates as the worktable 5 rotates in a position where the axis of 4 is coincident with the axes of the punch 8.2 and the cylinder 8. Circuit breakers 9 and the cam of 6, the switch 8.1 of 8 provide the controls for the forward and backward movement of the cylinders. The circuit breakers control respective electromagnetic control pneumatic and hydraulic valves depending on the operation fluid selected.

Download free eBooks at bookboon.com

2.4.3 Basic dimensions (Figure 7)

Dimensions are determined by the necessary number of component parts (part 9) held into the columns 2; by the stroke and size of power cylinders 6 and 8 and other parts and mechanisms involved in their operation; the length of the trough 7 and the distance between the outer diameter D of the turntable and $D_3 = (D - D_3) \times ½$. Due to the fact that component part 9 has small relative size, Figure 8, the height H_1 of loading necessary number of parts into the columns for continuous 8 hour operation (single shift) will be:

1) $H^{min} = \delta \,.\, n$, where $\delta = 2.1 - 0.1$; n is ¼ of necessary parts for 8-hour operation.

It can be seen from Table 2 that the overall time T_A necessary for operations I, II and III from the A stage to be carried out on work post No.3 (WP3) is the sum of times in column 16, i.e. ≈ 51 sec. The time necessary for sub-stage A4, operation VIII01 … 04 should not be added here because this is performed in another work post, work post No.1 where the final assembly and test of the loudspeaker is performed.

From all said above,

2) $n = T_{op.}/(T_{A1} + T_{A1} + T_{A1}) = 8.\ 3600/51$
   $n = 566$ parts
   [$T_{op.}$ is the operation time fund for 8-hours operation (single shift)]

For column 1, Item 2 $n_1 = 566/4 = 141.5 \approx 142$ parts No.9 and $\delta = 2.5$mm.

Therefore, $H_1^{min} \geq 142.\ 2{,}5 = 355$ mm

The overall height H of the feeder (Figure 7) will result if we added the height of the feed bin 1 ≈ 200 mm and the cylinder unit 6 ≈ 200 to H_1^{min} for design purposes, so

3) $H_1^{min} \geq 355 + 200 + 200 = 755$ mm

The size along the X length, L is defined as ≈ 4.d.4

4) $L_1^{min} \geq 4.4.40 = 640$ mm

The size B across the width is defined in the design as: $B^{min} \geq 180$ mm.

The dimensions thus defined are valid for the particular loudspeaker discussed. Specified dimensions will differ within tight limits for the other 14 variants or types of speakers (to make up to 15 as required in the assignment) if we assumed that this same conveyor will be used for assembling loudspeaker versions close in size and similar in design to the initial one [10].

Download free eBooks at bookboon.com

2.4.4 Storage capacity (Figure 7)

The parts storage capacity is determined by the design dimensions adopted and mainly by H and B, para 3.3. above. The bin 1 is capable of holding almost twice the number of component parts of the specified dimensions held in the columns 2 and the trough 7 and therefore the actual possible minimum set quantity of part 9 will be:

5) $N_{stor.} \geq 2.n - 1132$ parts – from (2) above we have n – 566,

Where, Nstor. is the storage capacity (number of parts).

This quantity is sufficient to provide 16 hours continuous conveyor operation.

2.4.5 Cycle time T_c

6) $T_c = T_A / m$
$T_c = 51/12 = 4.25$ sec, where

T_A is the time necessary to perform Stage A or ≈ operation I 01;
m is the number of positions provided on the turntable 5 (Fig. 7)

Download free eBooks at bookboon.com
Click on the ad to read more

2.4.5.1 Cycle time for the power cylinder 6 – T_{c6}

7) $T_{c6} = n_c . T_c$
$T_{c6} = 4. 4{,}25 = 17$ sec., where n_c is the number of columns 2 (Figure 7).

2.4.5.2 Cycle time for power cylinder 8 – T_{c8}

8) $T_{c8} = T_c = 4.25$ sec

2.4.6 Method of re-filling

2.4.6.1 Time for re-filling

Re-filling is performed every 16 hours of continuous conveyor operation or once in every 2 shifts and this necessitates some additional time of around 2 minutes. This time could be on the expense of short coffee breaks (of 10 to 15 minutes) allowed for operators within the 8-hour working time or before conveyor operation has started. Time for re-filling is in this sense per every 15 hours and 58 minutes when there are still some parts in the unit [11].

2.4.6.2 Re-filling technique (Figure 7)

Re-filling is performed by gradually filling 1132 component parts into the bin 1 (parts 9, Figure 2). To facilitate entrance to the openings 1.1 and the columns 2 parts are stirred in by hand when filled into the hopper bin. Additional stir in is applied 4 or 5 times throughout the shift to provide uniform column feed.

2.4.7 Feeder of component part 10 (Figure 2) to the fixture Item No.4, Figure 7

Once component part 9 has been fed to the fixture 4 further rotation of the worktable moves it underneath the fixture, which assembles part 10 over it. Prior to this stage, the glue applicator unit Item 10 in Figure 6 has applied glue to the upper surface of part 9 (not shown in Figure 7).

2.4.7.1 Design

Part No. 10 (Figure 2) – "Permanent ring-shaped magnet", Figure 9 is similar in shape to part 9 (Fig.2). Therefore, the part feeder device for parts 10 will be identical to the device shown and described in para 3 thru 3.3 above. There will be some differences in the sizes and storage capacity, as well as the time for re-filling, which is due to the larger size of part 10 compared to that of part 9.

Download free eBooks at bookboon.com

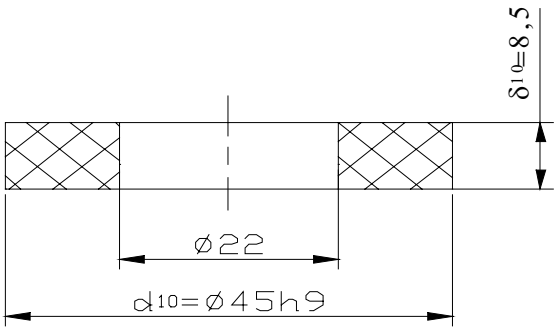

Figure 9

Intrinsic part magnetism could cause certain problems so the bin 1 (Figure 7) and the columns should be manufactured of some non-magnetic material, such as laminated fabric, plastics, Al, etc. It is also possible for the entire storage and feeder unit to be manufactured of such materials with the only exception of the feeder cylinders 6 and 8. For the punch 8.2 and the fixture 4 itself it is mandatory to avoid sticking to the part 10 for magnetic reasons.

2.4.7.2 Dimensions

If we assume that parts 10 will be filled once for every work shift, then the number of component parts filled into the unit will be:

9) $N_{stor.10} = N_{stor.} / 2$, where $N_{stor.} = 1132$ form (5)
$N_{stor.10} = 566$ parts

As part 10 is slightly larger in size: $\delta_{10} = 8.5$mm, the size for the height H_{10} will be:

10) $H_{10}^{min} \geq H^{min}. \delta_{10}/\delta_{.}$ ½,
where $\delta = 2.5$ mm and $H^{min} = 755$ mm from (3)
$H_{10}^{min} \geq 755. 8,5/2,5. ½ = 1283.5$ mm

The size along the length L_{10} is:

11) $L_{10}^{min} \geq 16. d_{10}$,
where $d_{10} = 45h9$ (from Fig.7) and 16 from (4)
$L_{10}^{min} \geq 16. 45 = 720$ mm

The size across the width B_{10} is:

12) $B_{10}^{min} \geq B^{min} .1/2. d_{10}/d$, where
$B^{min} = 640$ (from (4); and $d = 40$
$B_{10}^{min} \geq 640. ½. 45/40 = 360$ mm.

Download free eBooks at bookboon.com

Note: It is possible to increase B_{10}^{min} in order to make it identical to B^{min} on the expense of reducing dimensions H_{10}^{min} to provide for the storage capacity of 566 part 10 if this is considered appropriate during the design process.

2.4.7.3 Storage capacity

As defined above, the storage capacity is 566 parts

13) $N_{stor.10}$= 566 parts

2.4.7.4 Cycle time – T_{c10}

Cycle time T_{c10} is identical to that defined for part 9 due to the fact that one component of each type should be fed simultaneously for assembly.

$$T_{c10} = T_c = 4.25 \text{ sec}$$

Cycle times for power cylinder 6 and power cylinder 8 are the same as in (7) and (8), para 3.5.1 and 3.5.2 above:

$$T_{c6/10} = 17 \text{ sec}; \; T_{c8/10} = 4.25 \text{ sec.}$$

Download free eBooks at bookboon.com

Click on the ad to read more

2.4.7.5 Method of re-filling

This is the same as in * 3.6 above for every 8 hour operation.

2.4.8 Feeder for part No. 11 (Figure 2)

2.4.8.1 Design and operation

Part No.11 "Central pin" (magnet core system) is shown on Figure 10.

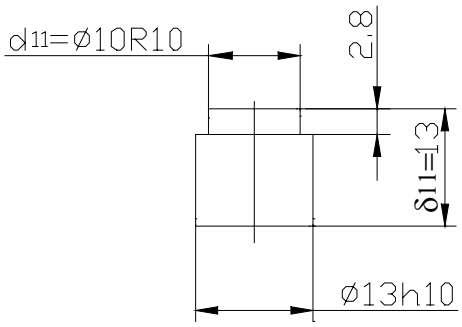

Figure 10: Feeder; Material: Steel

This component part could be fed in way similar to that described for part 9 and 10 earlier. One basic difference is the method of feeding the component into the tubes, columns 2 (Figure 7), where 11 should enter with its 10R10 dia pointing upwards (=Z), as shown in Figure 10. Therefore, parts filled into the tray above 1.1 (Fig. 7) should be arranged exactly the same way and in 1 row (1 level) heights – Figure 11 (designations are according to Figure 7).

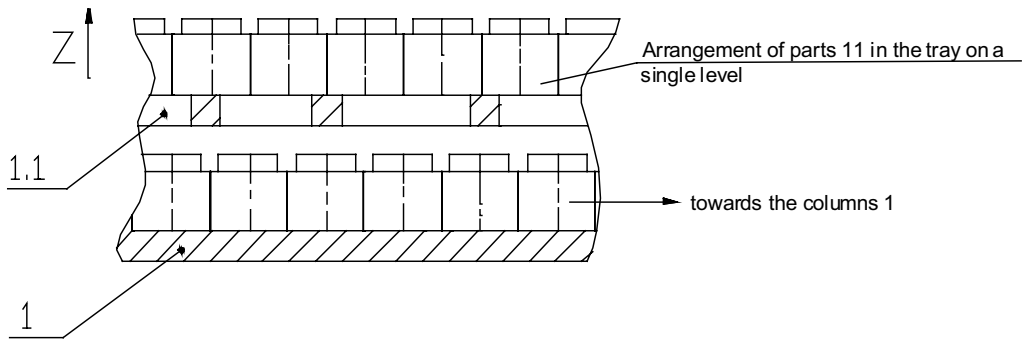

Figure 11

2.4.8.2 Basic dimensions

The basic dimensions here are identical to the dimensions of the part 9 device.

14) Height $H_{11}^{min} = H^{min} = 755$ mm; from (3) H = 755 mm
15) Length $L_{11}^{min} = L^{min} = 640$ mm; from (4) $L^{min} = 640$ mm
16) Width $B_{11}^{min} \geq B^{min} = 180$ mm; $B^{min} = 180$ mm

Download free eBooks at bookboon.com

2.4.7.3 Storage capacity $N_{stor.11}$

This should be identical to the quantity of parts 9 in order to guarantee simultaneous filling of hopper bins:

$N_{stor.11} = N_{stor.} = 1132$ parts; $N_{stor.} = 1132$ parts from (5)

2.4.7.4 Cycle time T_{c11}

This is again identical to cycle time for parts 9 and 10

$T_{c11} = T_c = 4.25$ sec; $T_c = 4.25$ sec from (6)

2.4.7.5 Method of re-filling

Re-filling should be done every 16 hours of continuous conveyor operation, T_f, which is the time needed to arrange the parts in the bin 1 tray (Figure 7). This is ≈ 15 min. In other words, re-filling is performed every 15 hours and 45 minutes. This is done by manually filling component parts 11 from a pallet into the bin 1 and arranging them with the 10h10 dia pointing up (the +Z direction).

2.4.9 Feeder of component part 12 (Item 12 in Figure 2)

The feeder bin item 6, Figure 6 for component part 12 is identical to the one shown in Figure 7 because all external (datum) dimensions and the shape of component 12 are identical to those of part 9. All other process parameters, such as cycle time, storage capacity and method of re-filling are also identical to those for component part 9.

2.4.10 Feeder of component part 1 (item 1 in Figure 2)

Used for performing assembly operations III 01…04 as in Table 2.

2.4.10.1 Design description and operation (according to Figure 7 and others)

Component part 1, "Body", is the most complex in shape and as a manufacturing technique part of the loudspeaker. It is made of 1mm thick steel sheets punched and stamped into a complicated shape. Therefore, the feeder mechanism cannot use the same bin 1 and columns 2 (Fig. 7), where component parts are filled in and almost automatically (semi-automatically) arranged in the required positions for further handling and fed into the respective assembly fixture (12 off) located around the diameter D1 of the turntable (item 2, Figure 6 and item 5 in Figure 7).

Download free eBooks at bookboon.com

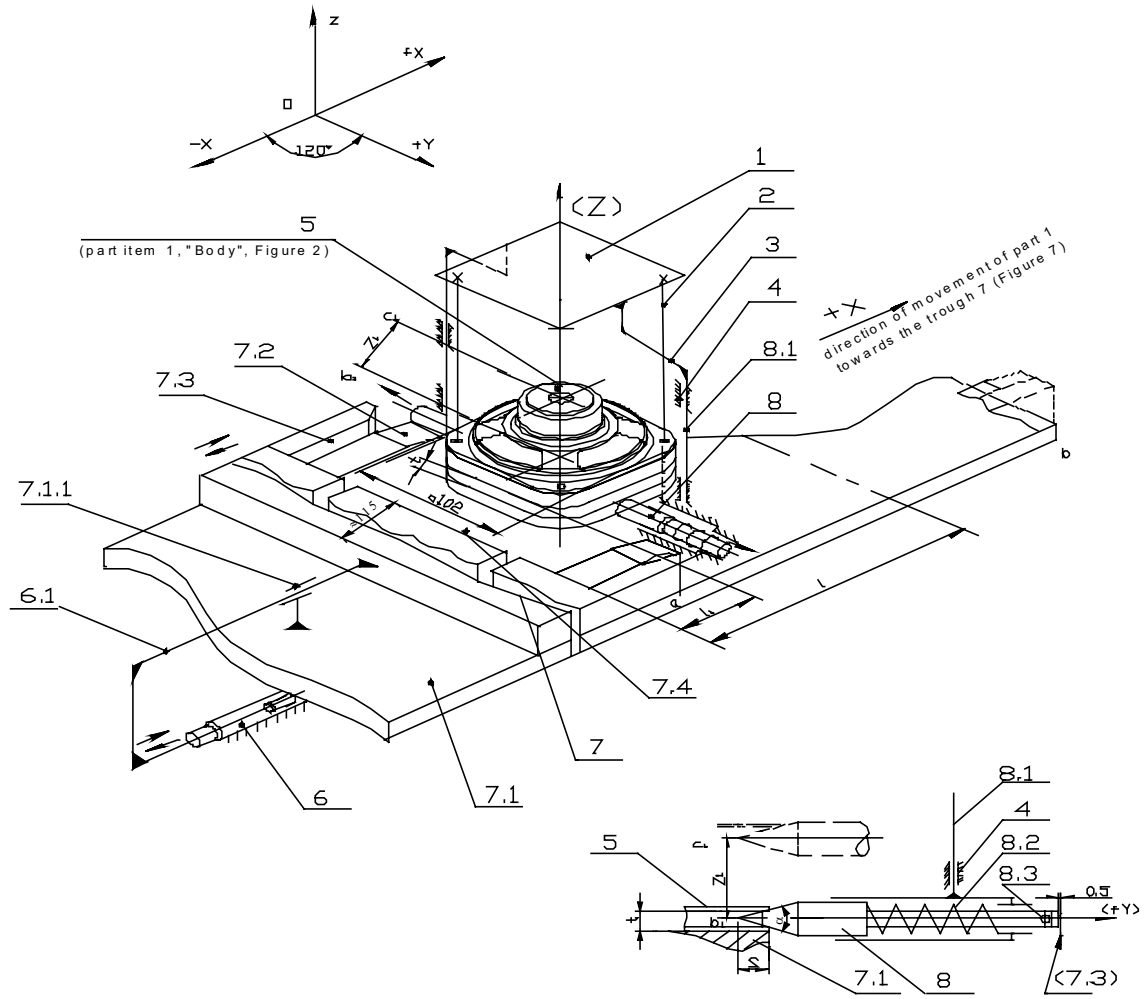

Figure 12

The design of part 1 is similar to that for part 9, except for 1 and 2 (Figure 7), which are not included. One column of "Body" parts is provided instead of 2 and the parts are stacked one on top of the other not in the feeder device but in a special removable cartridge "a magazine", which is removed when empty and replace by a re-filled one during operation. The feeder mechanism 6 and part items 3 and 9 are also present in this design solution but have a different operation, mechanics and design shape.

The feeder mechanism operated on a single cycle, i.e. it feeds 1 component part towards 4 (Figure 7) for every cycle of the turntable (which we estimated at 4.25 sec.)

Figure 12 shows the principal design diagram for this type of feeder mechanism.

Download free eBooks at bookboon.com

SPECIFICATION

for Figure 12

No.	Item No.	Description	Qu-ty	Notes
1	1	Cartridge for component parts	1	120 parts (part 1, Fig.2)
2	2	Pin	2	Guide for part 1
3	3	Stand	2	Fixed to part 1
4	4	Guide	4	Sliding hinge on 8
5	5	"Body" part	180	
6	6	Power cylinder	1	Pneumatic or hydraulic
7	6.1	Guide	1	Towards push bar of 6
8	7	Pusher	1	
9	7.1	Base plate	1	
10	7.1.1	Bracket	1	With sliding support for 6.1
11	7.2	Inclined plane	2	Part of 7, angle towards X0Y
12	7.3	Vertical plane	2	Part of 7, parallel to X0Z
13	7.4	Face wall	1	Part of 7, parallel to X0Y
14	8	Positioning lock, lifting	2	Axis parallel to y
15	8.1	Sleeve for positioning lock, with guide	2	
16	8.2	Spring	2	
17	8.3	Split pin	2	

Note: 7.2; 7.3 and 7.4 are elements of part 7 "Body".

Parts are stacked one on top of the other as shown in Figure 12, with their tapered section pointing towards cartridge 1 bottom and are positioned in place (around the Z axis) by mean of pins 2 fixed to the cartridge. If the cartridge has been manufactured to have the shape of a deep square-shaped pallet it is possible for parts to be located and fixed in the required position by the four wall s of 1 instead of using the pins 2. The cartridge 1 is rotated at 180° around the axis, which is parallel to x or y during transportation, such that component parts (part 1 in Fig. 1) are prevented from falling off. Located in the bottom section of 1 at a distance of t/2 from its end are 2 positioning locks 8, Figure 12, which are being held against the centre of the (pallet) cartridge 1 by means of the spring 8.2 and their travel distance is limited by the split pin 8.3. The positioning lock 8 sleeve is moving in the +Z direction from its initial position as shown in the figure to a travel distance of Z_1 (between positions b_1 and c_1), which is slightly longer than the full height of 1 – 1off "Body" part. The cartridge 1 is secured to the base plate 7.1 of the device, which is also the bottom plane of the profile groove (pos.7 from fig. 7) in a manner that should allow for dismantling.

Download free eBooks at bookboon.com

Operation

When the cartridge 1 is positioned at 180° over 7, the topmost component part contained in it is forced by the weight of all the other parts to overcome the spring force of the positioning lock 8 thus dropping under the lock's axis, its flat section abutting the plate 7.1. When the hydraulic cylinder 6 is actuated in the +x direction it moves the pusher 7, which slides along 7.1 guided by the bracket 7.1.1 (or some other guides in the ±x direction). The travel distance of 7 along the +x direction includes the travel l_1 and the 102 dimension of the component part: $e = l_1 + 102$. While travelling the distance l_1, initially 7 contacts the sleeves 8.1 of the positioning locks (2off) via the inclined planes 7.2 thus lifting them up to a distance of Z_1. As the positioning locks lift they cause the whole stack of component parts above them to lift as well, such that only one (the bottom-most one) is left, which is pushed 102 mm towards the trough (7 in Figure 2). The piston rod of the cylinder 6 then moves backwards, which causes the pusher 7 to retract to position a, which repeats the whole cycle.

2.4.10.2 Dimensions

17) Length L_1 $L_1^{min} = 640$ mm;
18) Width B_1 $B_1^{min} = 250$ mm;
19) Height H_1 $H_1^{min} = 560$ mm;

Cartridge height is ≈ 380 mm; cartridge cross-sectional area is ≈ 125 mm.

Download free eBooks at bookboon.com

Click on the ad to read more

2.4.10.3Storage capacity

$N_{stor.1} \geq 120$ parts

2.4.10.4Cycle time

T_{c1} $T_{c1} = 4.25$ sec

2.4.10.5Method of re-filling

The cartridges 1 come from the storage area filled and arranged and the operator only has to remove the empty cartridge and replace it with a new one. Cartridges have to be replaced every 8.5 minutes of continuous feeder operation, in other words every 2 hours of continuous operation of the assembly unit (work posts No.1, No.2 and No.3).

2.5 Evaluation of the assembly unit

Based on the analysis of individual assembly operations described earlier and the "Assembly analysis chart", Table 2 prepared, we were able to define [12]:

- Individual assembly operations and transition stages of various types, sequence of performance, duration and interrelation.
- The number of basic equipment involved and its position within the assembly unit, interrelation between individual devices and work posts. This has been based on the assumption of having one operator servicing one work post [13].
- The overall fund of required operation time T_{op} necessary for the assembly of one loudspeaker of the selected example type.
- The type, quantity and direction of movement of component parts (semi-finished units required for the assembly operation), sub-assemblies (assembled sections comprising more that one individual component part) as well as the finished product ready for packaging [11].
- The role of the currently available conveyor in relation to the assembly units configuration thus formed
- Possibilities for mechanisation and automation of operations from the A stage aimed at increasing production capacity and reaching the required level of parameters; loudspeakers/ month. The cost of mechanisation investment resources [14].
- Work posts and assembly operations suitable for the use of robots.

Download free eBooks at bookboon.com

2.5.1 Structure and functioning of the assembly operation unit

Three work posts have been defined all serviced by a single operator each: WP No.1, WP No.2 and WP No.3. These are positioned around the auxiliary turning worktable, which is located on the sideways next to the linear flat conveyor with work posts No.3 and No.1 closer to the linear conveyor. (A layout arrangement is shown in Figure 6).

2.5.1.1 Operations to be carried out (part numbers are as in Figure 2)

- Assembly operations for the drive unit, stage A are carried out in work post WP No.3. These include the assembly of component parts 1, 9, 10, 11 and 12 involving operations I 01 … 04, II 01 … 04 and III 01 … 03.
- Assembly operations for the terminal strip are carried out in work post WPNo.2.
  - Stage D includes the assembly of component parts 20, 21, 22, 23, 5 and 1. Involved assembly operations and transition sub-stages are IV 01, 02 and 03.
  - Stage C includes the assembly of the cone and dust cover. Component parts 4, 2, 8 and 1 are assembled here. Involved assembly operations and transition sub-stages are VII 01 … 07.
- Assembly operations for the voice coil and suspension, stage B are carried out in work post WP No.1. These include the assembly of component parts 1, 14, and 16 involving operations V 01, 02 and 03; VI 01 … 05.
- Additional assembly (final) of the loudspeaker
  - Stage A4, component parts: 1 with the parts already assembled to it 11+12; 6 and control [15].

4.5.1.2 Duration of operations performed in the individual work posts – T_{WP} (Table 2)

Duration is defined as the sum of individual duration of all assembly operations and transitional sub-stages in the relevant work posts.

20) T_{WP1} = 60 sec; T_{WP2} = 60 sec; T_{WP3} = 51 sec.

Download free eBooks at bookboon.com

2.5.2 Transportation of component parts and sub-assemblies, Figure 13

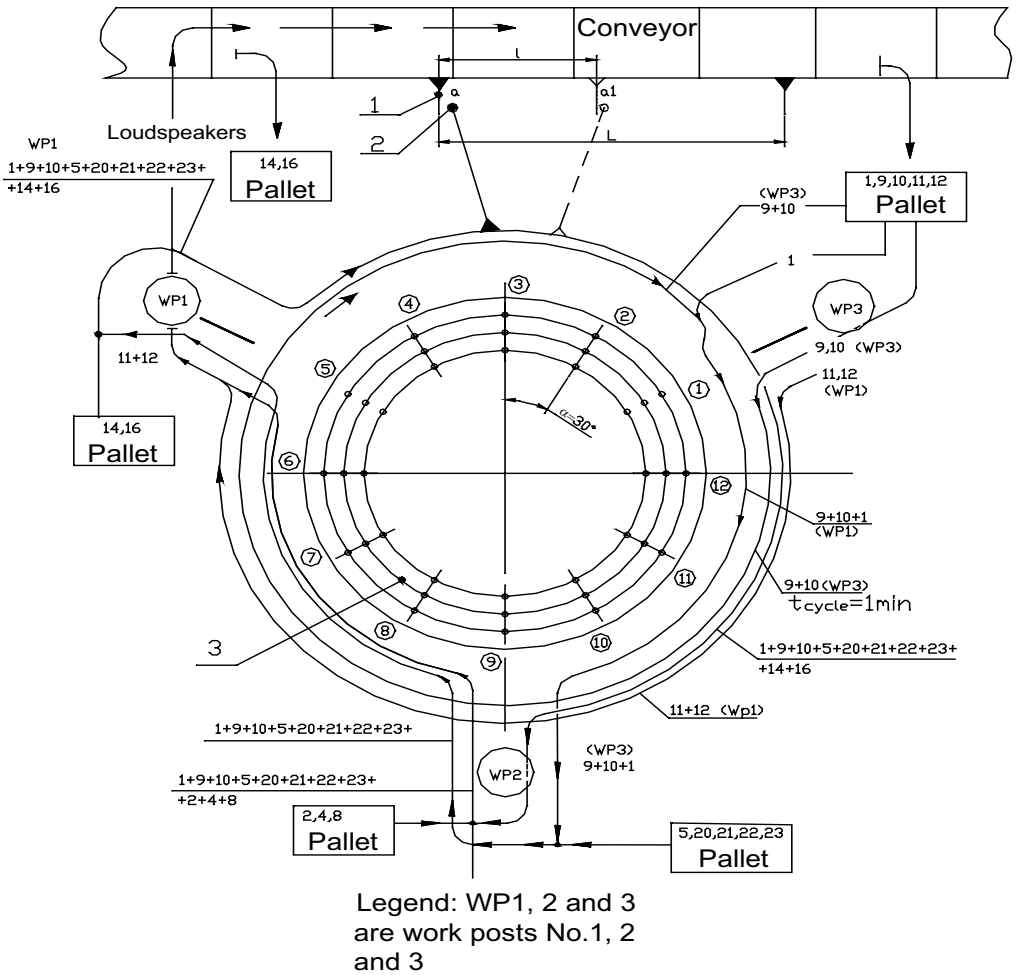

Figure 13

Figure 13 shows the transportation flow for individual components and sub-assembles. Parts 1, 9, 10, 11 and 12 are fed to WP3 from pallets. Parts 5, 20, 21, 22 and 23 as well as 2, 4 and 8 are fed to WP2 from pallets. Component parts 14 and 16 are fed to WP1, respectively. The pallets with component parts required for the continuous operation of individual work posts and conveyor are transported from the store to the corresponding work post by means of the conveyor and in between individual work posts WP1, 2 and 3 – by means of the turntable 3. One complete turn of 3 takes 1 minute and the cycle duration between all 12 individual working positions located around the table (1 thru 12) is 5 sec. The rotation of 3 is interrupted and alternated by idle time necessary for the assembly operations of the machine to be carried out in every working position. For example, the time required for riveting part 11 and 12. The rotation of 3 around the axis O is synchronised with the conveyor movement with the driving click 2 (a mechanism similar to a Geneva wheel) travelling the distance l between positions a and a_1 thus moving the reel on the arm 2 (of the table 3) for as much time as is required to rotate 3 at an angle of 30°, which is < 5 seconds.

Download free eBooks at bookboon.com

2.5.3 Arrangement layout of assembly operation units along the conveyor, Fig. 14

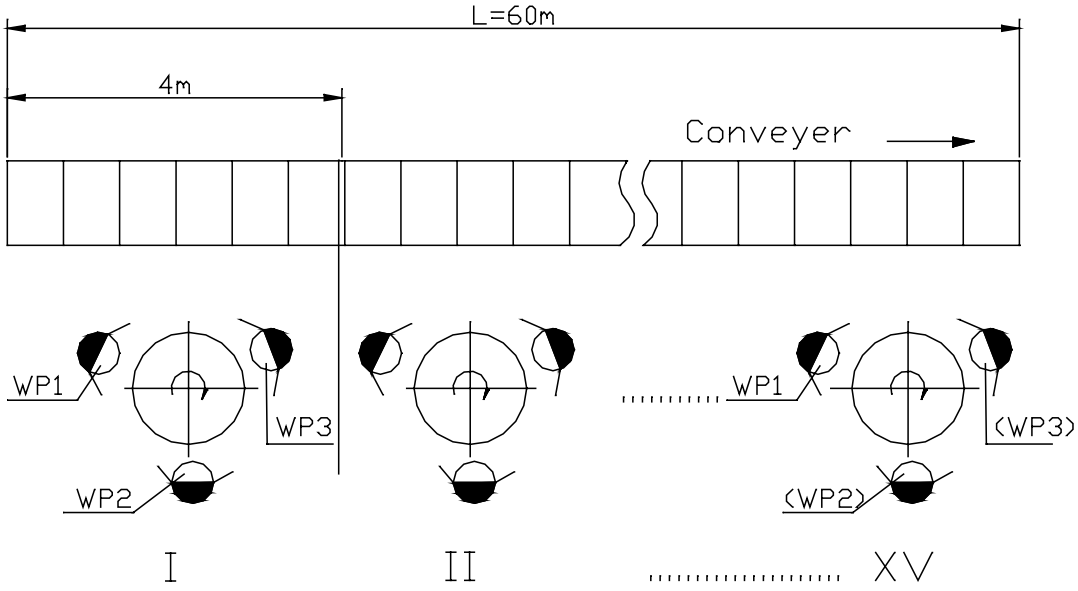

Figure 14

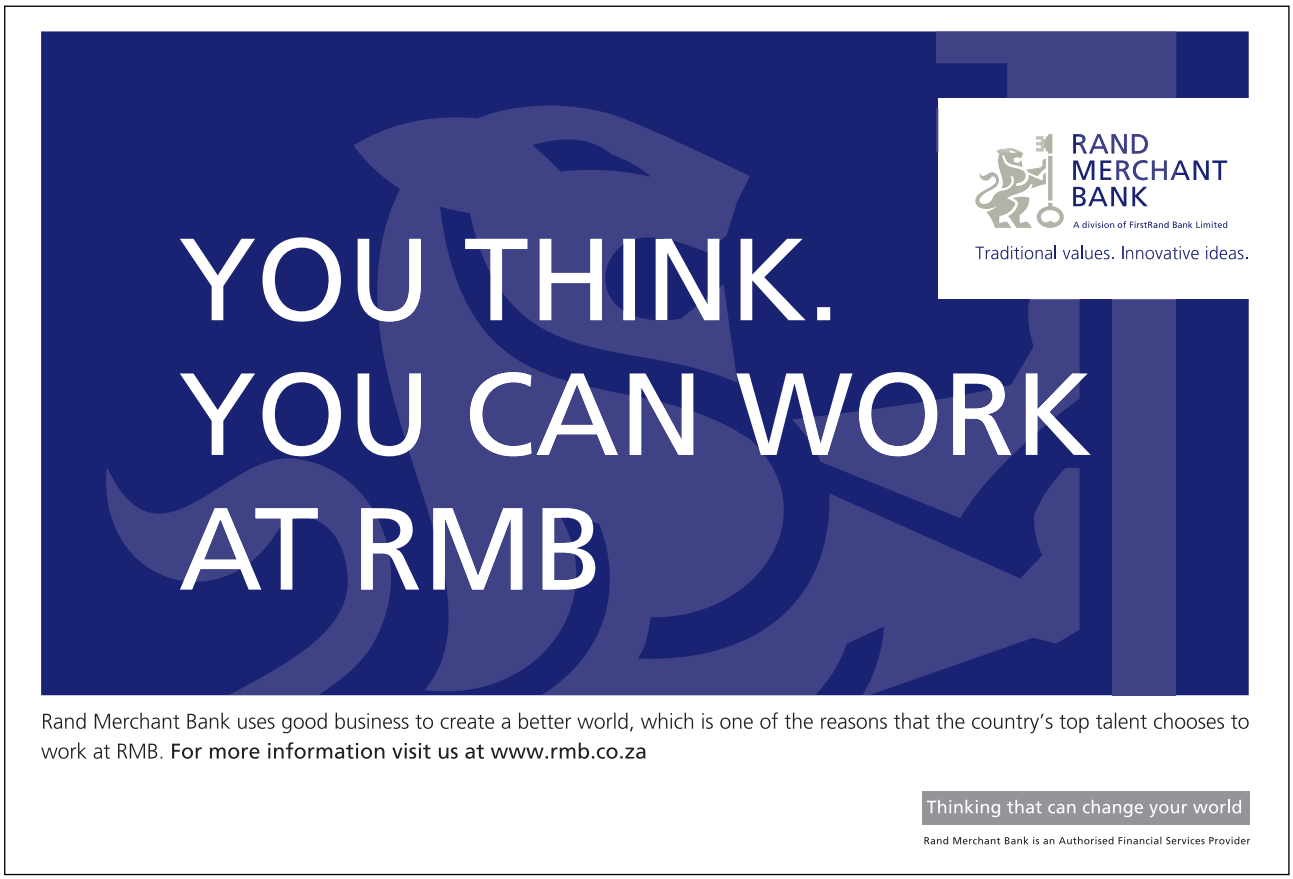

Download free eBooks at bookboon.com

Click on the ad to read more

Figure 14 shows an example of a layout diagram for operation units from I to XV along the conveyor. Each operation unit produces (finally assembles) 1 particular type of loudspeaker. One pre-condition is that all 15 types should not differ considerably in overall size. From 4.1.2 above it can be seen that when WP1, WP2 and WP3 operate simultaneously in each assembly unit, the time required to assemble one loudspeaker of a particular size and type (or model with only slight design differences), $T_{ass.sp.}$ is:

21) $$T_{ass.sp} = \frac{\sum_{i=1}^{n} Twp_i}{N}$$

$$T_{ass.sp} = \frac{Twp1 + Twp2 + Twp3}{N}$$

$$T_{ass.sp} = \frac{60 + 60 + 51}{3} = 57[s]$$

Where: $T_{ass.sp}$ is the time required to assemble one loudspeaker;
T_{WPi} is the time required for work post i, and

N is the number of working positions included in the assembly unit.

The rotation cycle for the work table (time per 1 turn) is T_{tt} = 57 sec. For ease and convenience to operators we could assume that $T_{ass.sp} \approx 1$ min. In other words, the operation unit, which comprises WP1, 2 and 3 and a turntable will produce one loudspeaker on every 1 minute not involving the automation in WP3.

2.5.3 Production capacity of the assembly line

The production capacity of the assembly line thus comprising operation units I … XV and the conveyor will be Q:

22) $Q = Q_{ass.un} . N . T$

$Q_{ass.un}$ = 60 parts/hour

N = 15

T = 50 . 4 = 200 hours

Q = 60 . 15 . 200 = 180000 units/month, where:

$Q_{ass.un}$ is the production capacity of the assembly unit;

Q is the production capacity of the line per month

N is the number of assembly units

T is the working time fund within 1 month.

Download free eBooks at bookboon.com

2.5.3.1 Production capacity of the assembly unit following the automation of assembly operations involved in WP3 – Q_{WP3}

If the mechanisation and automation techniques suggested in para 2 and 3 earlier are adopted, the time required to carry out all assembly operations in this particular work post will then be q_{WP3}= 5 sec. This is implied by the necessity of keeping the cycle time required for the rotation of the worktable to 1 minute because of manually operated WP2 and WP3. It is not impossible to include all operations involved in the A stage on WP3 within this time of T_{WP3} = 5 sec because they are performed by all 5 automatic part feeders in parallel (Figure 6).

From all said above we could conclude that WP3 will operate for only a small relative part of the working time for each shift to feed the sub-assemblies produced in it to the other manual work posts WP2 and WP1. Thus, we will have a large reserve available for increasing the production capacity of the line, or:

Q_{WP3} = 720 units/hour (= 12.60)

Meanwhile, 480 sets of sub-assemblies produced in WP3 are required per shift to feed WP2 and WP1. Therefore, work post WP3 will only have to operate for 40 minutes per shift to produce this number when automation is adopted (the is due to its production capacity, which increases 12 times as a result of the automation).

(12.40 min. = 480 min = 8 hours)

From what we have said above we could conclude that automation could be adopted for 15/12 = 1.25 WP3 work posts from all the 15 assembly units discussed above (we could round this to 2 WP3 work posts). These 2 automated WP3 will be sufficient to feed all assembly units in the assembly line, from I to XV with sub-assemblies produced in this particular work post provided that Q = 180000 units/month. This will also result in reduction of 13 basic operators throughout the line. Two operators will work on each of the assembly units III thru XV as these will only involve WP 2 and WP1 [16].

2.5.4 Investment required to achieve Q = 180000 units/month

23) I = M . N +AS
I = 3500 . 15 + 25000 = 77500 £, where

I is the investment required (in £);
M is the funds needed to equip the assembly unit (automation of WP3 is not included here) (in £);
N is the number of operation units;
AS is additional expense involved in the assembly line (in £)
I assume M = 5500 £ per one turntable (one table for each assembly unit);

Download free eBooks at bookboon.com

25000 £ is the expense involved in the conveyor, organisation of transportation and training of operators.

$$I = 77500 < 100000£$$

100000£ have been initially calculated for a capacity of Q = 180000 units/month

2.5.4.1 WP3 automation investment – I_{aut}

WP3 will require larger investment if built according to Figure 6. For example, ≈ 4000 £ will be required for all 5 feeder devices or totally 15 × 4000 = 60000 £ for all 15 operation units [16].

$$I_{aut} = I + 60000 = 135500\ £$$

2.5.5 Operation sequence using assembly robots "Fanuc" or "Pragma"

From all said above it can be seen that a suitable assembly section to involve assembly robots is the "drive unit" Stage A. On the other hand, it would be hard for the robot to reach the set requirement with the other mechanised attachments involved in WP3 due to the exceptionally short time = 5 sec required to feed component parts 1, 9, 10, 11 and 12 in all 5 working positions. Nevertheless, the operator in WP3 could be replaced by one assembly robot. In this case the time required to perform the operations involved in Stage A will increase to 30 sec, or in average, 6 sec for each part [16].

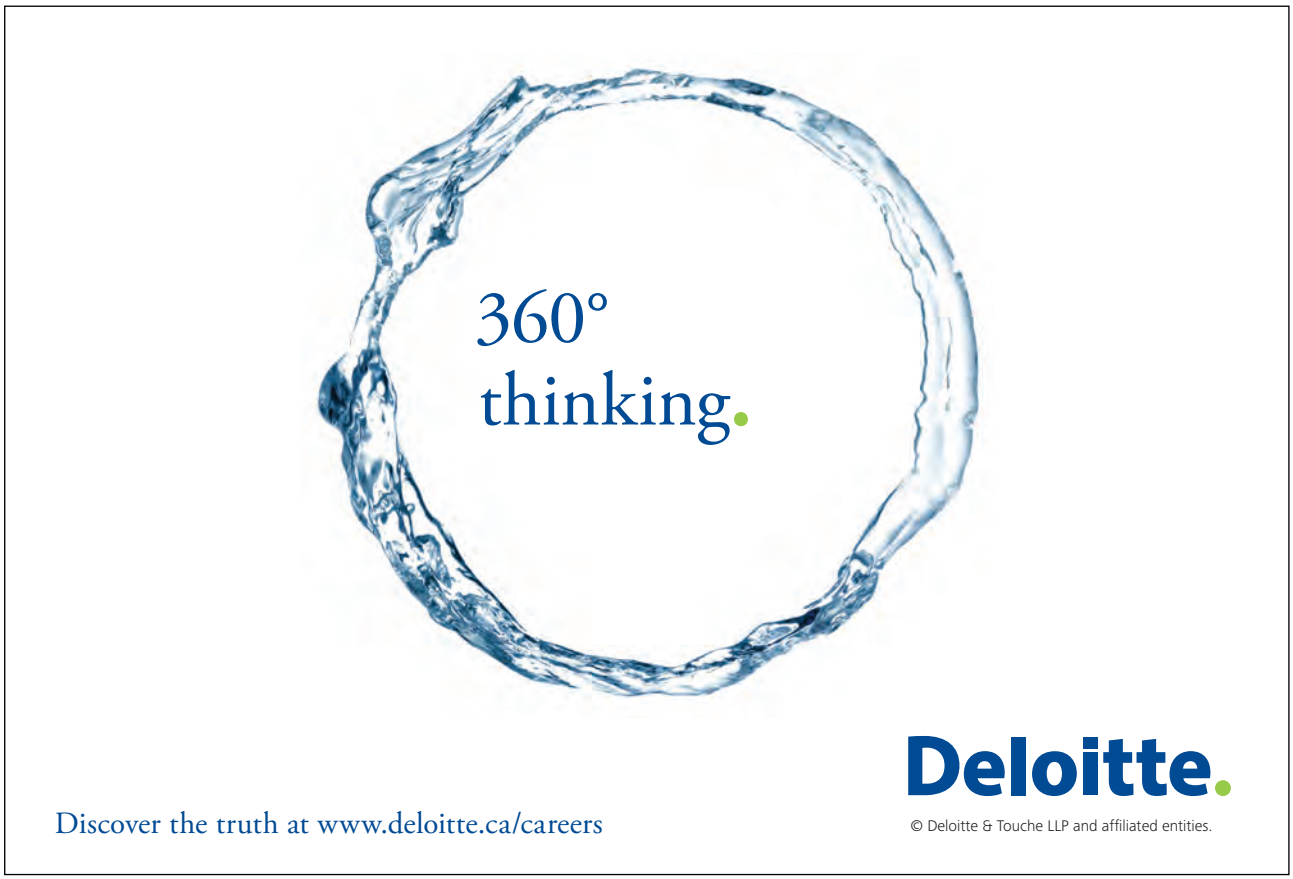

Download free eBooks at bookboon.com

Click on the ad to read more

The robot could carry out the following handling operations [17]:

- Picking component parts 1, 9, 10, 11 and 12 from a pallet or parts storage rack and position them in sequence into the assembly fixtures with the grip (robot arm) being identical for parts 9 and 12; magnetic grip for part 10 and a combined (more complex) grip for part 1.
- Moving the punching press and the glue applicator
- Put finished sub-assemblies back into the pallets or storage racks ready to be assembled in the next work post positions
- Unload pallets containing parts for WP3 from the conveyor and transporting sub-assemblies to working positions in WP2 and WP3.

If assembly robots are selected to be used this could avoid the use of turntables thus producing a **linear work post arrangement** diagram.

2.5.5.1 Linear arrangement of work posts, Figure 15

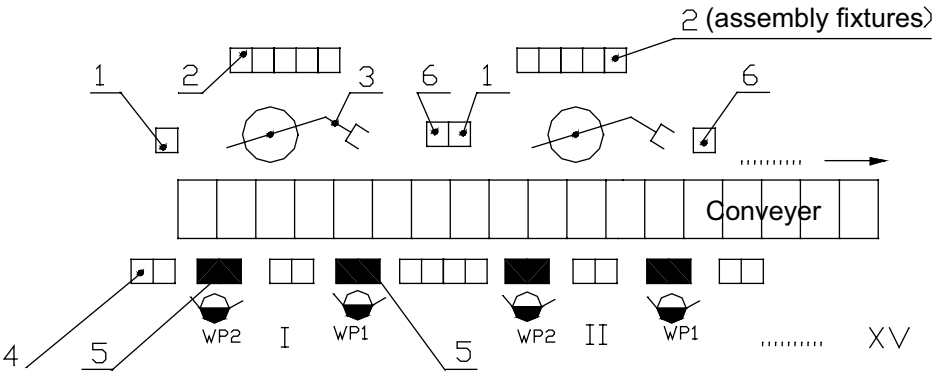

Figure 15: 1. Pallets containing parts for WP3 (robot complex)
2. Work table with assembly fixtures for parts 9+10, 11+12 and 1+9+10
3. Assembly robot, "Fanuc" or "Pragma" type with double grip arm
4. Pallets containing parts for WP2
5. Work table for WP2 (WP1), etc. Up to assembly unit XV
6. Pallets (storage racks, cartridges) containing finished or drying subassemblies.

2.5.5.2 Production capacity $Q_{aut.ass.un}$ of automated WP3

from (22) above $Q_{aut.ass.un} = 2 \,.\, Q_{ass.un} = 120$ parts/hour

2.5.5.3 Assembly line production capacity Q_{aut}

$Q_{ass.un} \geq 180000$ units/month. This is due to the fact that the production capacity of WP3 is twice higher.

Download free eBooks at bookboon.com

Saving around 30 sec at WP3 would allow us to reduce the number of required assembly robots by two (the number of working positions in WP3). Such reduction will require one assembly robot to assemble parts 1, 9, 10, 11 and 12 for two types and sizes of loudspeakers and servicing two neighbouring assembly units [comprising 2 × (WP2 + WP3)]

2.5.5.4 Required investment for an assembly line comprising 15 assembly robots and 30 operators (15 assembly units × 2 operators each)

$I_{aut} = P_{aut} . N + AS_1$

$I_{aut} = 4500 . 15 + 4000 = 107500$ £, where:

I_{aut} is the required investment (in £);

N is the number of assembly units;

AS_1 is additional expense involved (in £).

References

1. Angeles, J., *Fundamentals of Robotic Mechanical Systems: Theory, Methods, and Algorithms*. TWER 681.3*I29 / ANGE 1997.
2. Asada, H. and Slotine, J.-J.E., *Robot analysis and control*. TCPW 681.3*I29/0011 TELE 681.51:007.52/ASAD 19.
3. Ball, Robert S., *Theory of screws: a study in the dynamics of a rigid body*, Hodges, Foster and Co., 1876. TWER 514 / BALL 1988.
4. Bar-Shalom, Yaakov and Li, Xiao-Rong. *Estimation and Tracking, Principles, Techniques, and Software*. TWER 681.5.01/BAR 1993.
5. Brady, J.M, *Robot motion planning: planning and control*. TELE 007.52/ROBO 1982.
6. Brand, Louis, *Vector and tensor analysis*, Wiley, 1948. TWER 512/BRAN 1948.
7. Canudas de Wit, C., Siciliano, B. and Bastin, Georges, (Eds.), *Theory of Robot Control*. TWER 681.3*I29 / THEO 1996.
8. Craig, J.J, *Introduction to Robotics: mechanics and control*. TWER 681.3*I29/CRAI 1986.
9. Crane, C.D. III and Duffy, J, *Kinematic Analysis of Robot Manipulators*. TWER 681.3*I29.
10. Ginsberg, M, *Essentials of Artificial Intelligence*. TWER 681.3*I20/GINS 1993.
11. Duffy, J, *Statics and Kinematics with Applications to Robotics*. TWER 531.8 / DUFF 1996.
12. Kanal, L.N. and Lemmer, J.F., (Eds), *Uncertainty in Artificial Intelligence*. TCPW 681.3*I23/0045.
13. Latombe, Jean Claude. *Robot motion planning*. TWER 681.3*I29/ROB 096.
14. Alain Hertz, Yves Mottet, Yves Rochat, On a scheduling problem in a robotized analytical system. *Discrete Applied Mathematics, Volume 65, Issues 1–3, 7 March 1996, Pages 285–318.*
15. Advances in manufacturing. *Computers in Industry, Volume 6, Issue 4, August 1985, Pages 288–295*.

Download free eBooks at bookboon.com

16. M.C. Gupta, C. Judt, Y.P. Gupta, S. Balakrishnann, Expert scheduling system for a prototype flexible manufacturing cell: a framework. *Computers & Operations Research, Volume 16, Issue 4, 1989, Pages 363–378.*
17. Mark R. Cutkosky, Paul S. Fussell, Robert Milligan Jr., The design of a flexible machining cell for small batch production. *Journal of Manufacturing Systems, Volume 3, Issue 1, 1984, Pages 39–59.*

Download free eBooks at bookboon.com

Click on the ad to read more

3 Strategic approaches to resource husbandry and recovery: the superwash combo case study

3.1 Introduction

A group of production managers of the DOMAPP factory has to find solutions to problems that have occurred as a result of the necessity to increase the volume of production of the Superwash Combo product. A preliminary study of the company's structure, activities and problems was used as an initial database. The managerial team also included experts from various departments of the company and production department superintendents. The teams thus expanded ensure increased possibilities for outlining and identifying to a maximum extend the wide range of problems that need to be solved.

The main objective of the gathering that must be related to the overall system of objectives of the company is to prepare a plan to rescue the factory through increasing the production volume of the new washing machine, the Superwash Combo. It will be necessary to go through the following stages in order to be able to prepare this plan:

- Clarify the production situation in the DOMAPP factory. Prepare an analysis of: the process of conversion of raw materials into a built product; energy requirements; potential possibilities for re-use; customer perspectives, society, technical, economic and political factors [1].
- Prepare a suitable process flow chart for the main material chains in the product, from nature to consumers [2]. Considerations of re-cycling and possible re-use at both the components and complete product level should be given [1].

The techniques employed included the analytical synthesis method and the brain attack technique [1]. The following plan of action of the team has been prepared: All participants have been given sheets of paper where they were asked to write down their ideas about the problems placed. Participants were allowed to swap sheets to give them more hints and generate additional suggestions. Once this was complete all participants had to line up, discuss and assess the suggestions given.

Download free eBooks at bookboon.com

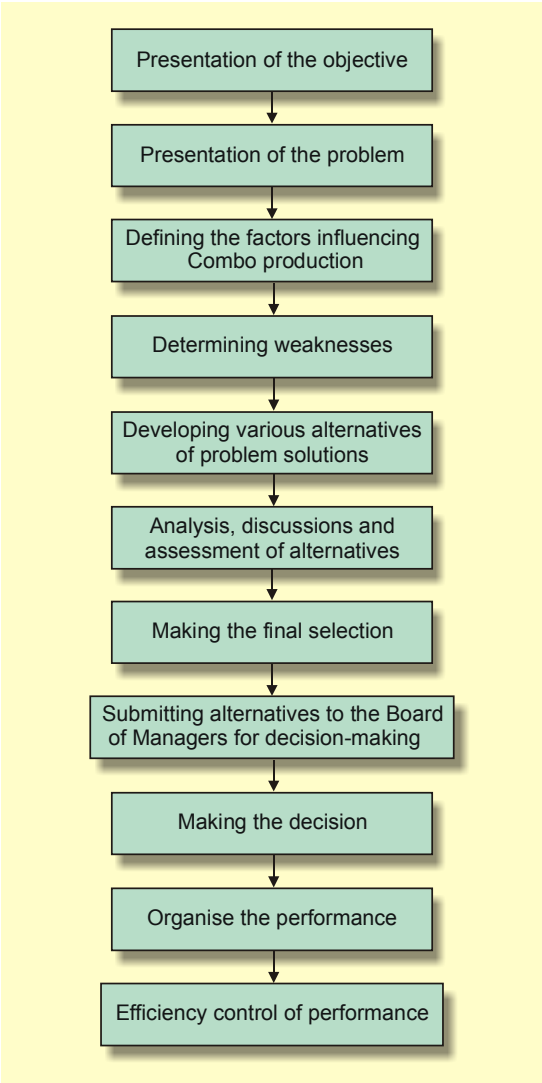

Figure 1 [2]

3.2 The team's work

The team advanced to the first objective: Identifying the factors that influence the Combo production. Results were arranged in a cause and consequence diagram, the Ishikava chart [3]. The cause and consequence diagram was build up observing the following sequence:

- the basic problem is presented as a main horizontal arrow in the diagram;
- all influencing factors were identified;
- major junctions of basic factors were marked (Figure 2);
- sub-factors were also marked by corresponding arrows for each basic factor;
- The arrangement of the diagram appears as a well-branched tree or fishbone (Figure 3).

Download free eBooks at bookboon.com

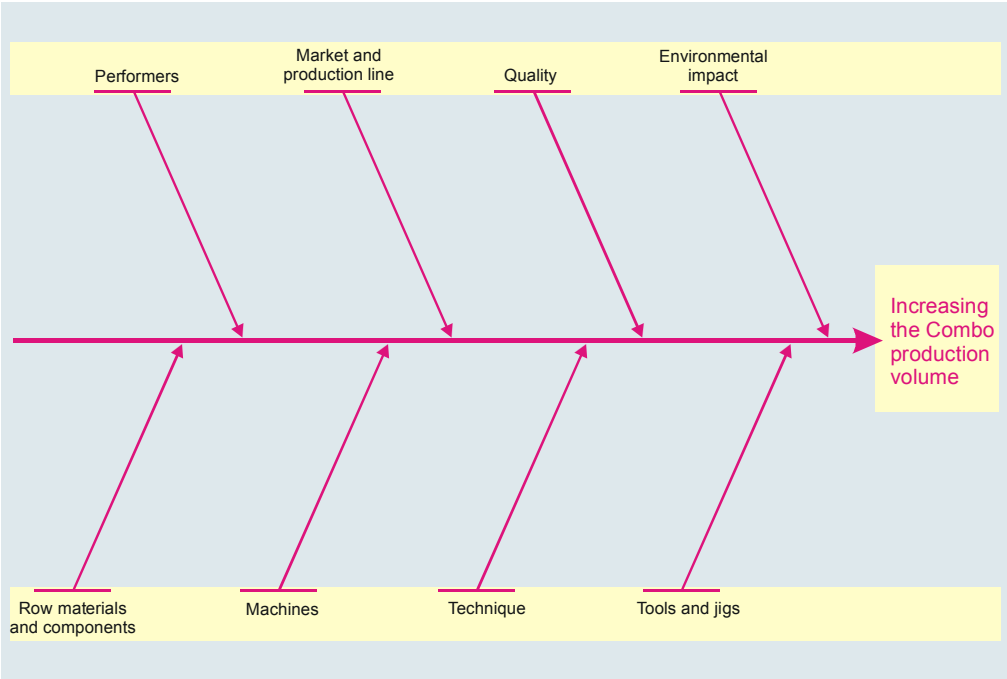

Figure 2

The diagram was then split up into separate branches and an assessment of performance of individual company activities was made to identify weaknesses. The brain attack technique was used to develop various problem solution alternatives [3].

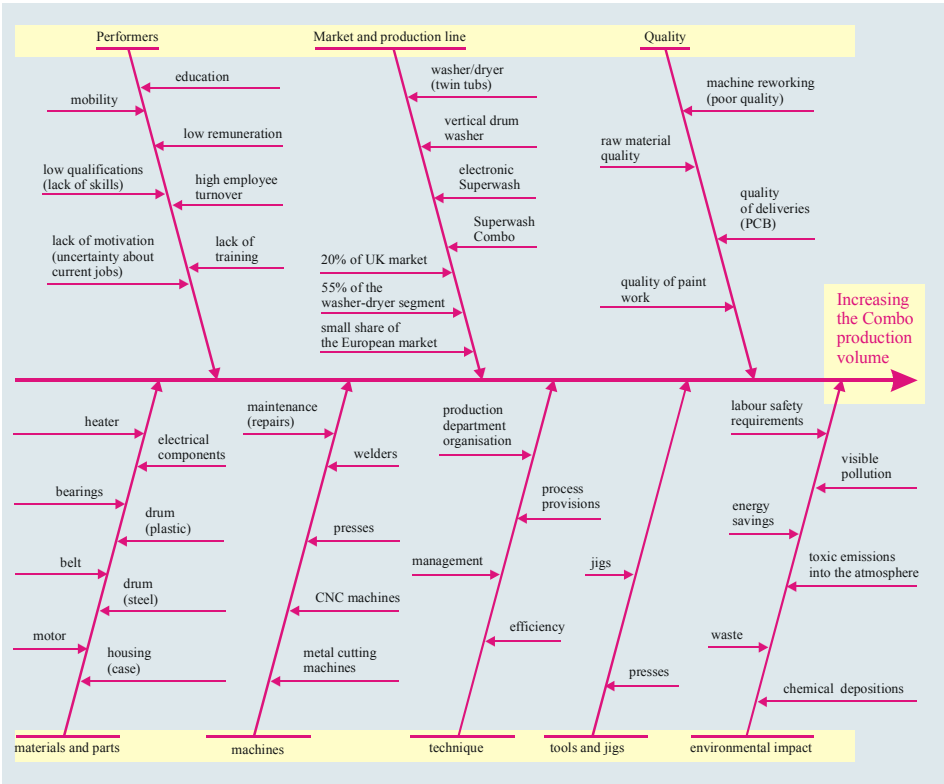

Figure 3

Download free eBooks at bookboon.com

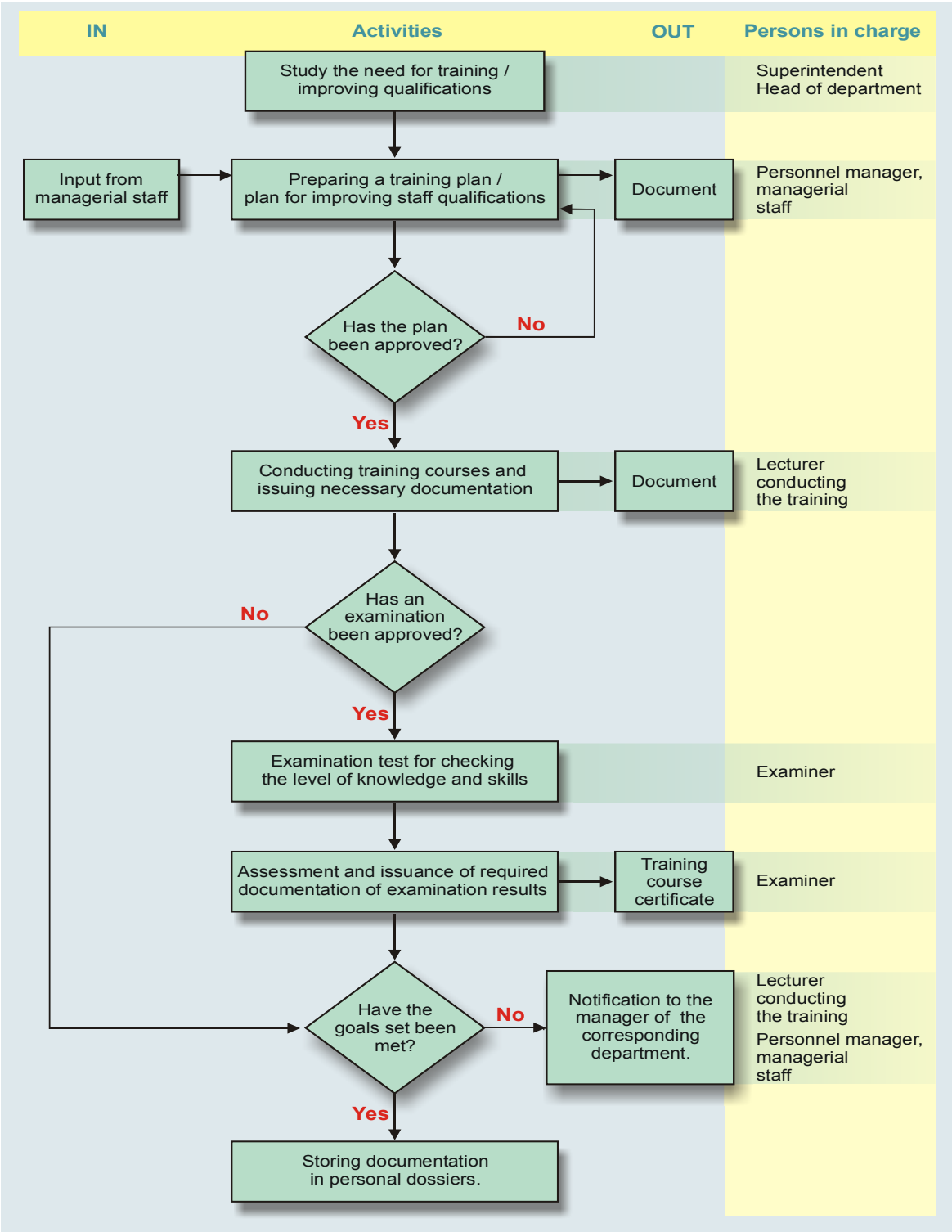

Figure 4

Each individual alternative that was suggested had its own particular cost that had to be paid. Therefore, the team had to approach a realistic plan that could be implemented involving the minimum amount of spending. As a result of many hours of hard work the following opinion was given on individual factors.

Download free eBooks at bookboon.com

3.3 The performers

The lack of adequate training in the factory, low wages and lack of motivation in staff were identified as most significant weaknesses.

It was clearly stressed that the developed plan to increase the production capacity could not be implemented unless a well-motivated personnel is involved. Explanation activities will have to be undertaken to draw the workers attention to the fact that the increase in the Combo production will guarantee they retain their jobs and will rescue the factory and maintain the economic infrastructure in the region. Guarantees should be provided to the workers and all employees that the increase in production and company profit will also involve increase in wages and improved social service provisions. The larger market share of the new washing machine would raise the image of the company and all its employees [4].

MSM
MAASTRICHT SCHOOL OF MANAGEMENT
Increase your impact with MSM Executive Education
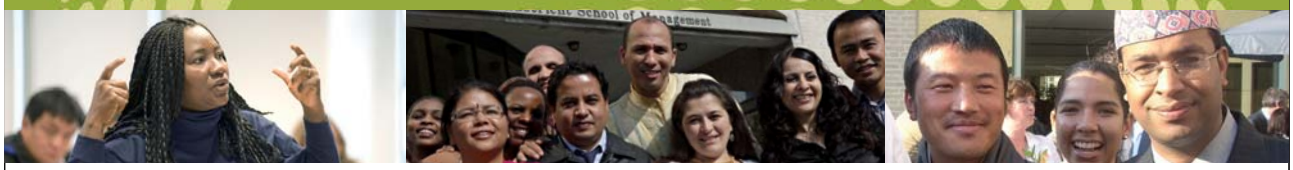
For almost 60 years Maastricht School of Management has been enhancing the management capacity of professionals and organizations around the world through state-of-the-art management education.
Our broad range of Open Enrollment Executive Programs offers you a unique interactive, stimulating and multicultural learning experience.
Be prepared for tomorrow's management challenges and apply today.
For more information, visit **www.msm.nl** or contact us at +31 43 38 70 808 or via admissions@msm.nl
the globally networked management school
Download free eBooks at bookboon.com
Click on the ad to read more

The working team has outlined the following programme to improve the quality of personnel [5]:

- reduce managerial staff and allocate new rights and responsibilities;
- conduct initial training of employees recruited to work for the company;
- conduct safety requirements training;
- prepare a plan of conducting training events on increasing staff qualifications (Figure 4);
- link the training given to eventual remuneration;
- preparing position profile documentation to identify the activities performed and rights and responsibilities allocated;
- training for fitters for rapid press tool change based on the process experience techniques gained from other companies in the field;
- high wages that would ensure high performance and high quality work.

3.4 Quality

The team has given high attention to the assessment of quality problems during component manufacturing and assembly of the Combo product. The main opinion was that elimination of re-working due to poor quality would substantially increase production efficiency. The company is 8% behind leading companies in the field.

Basic recommendations that were outlined were addressed to the need to increase the quality of PC boards supplied by the Electro company, the painting process and the defects observed in the washing machines.

Considering the fact that the Electro company is a division of AEE, the team has recommended the following possible solutions to quality problems of the delivered components [5]:

- signing a contractual agreement between the two factories ensuring the required quality of deliveries;
- introducing incoming deliveries control in the DOMAPP factory;
- requiring a quality certificate based on manufacturer performed inspections.

Specialists have identified the painting process as a special process where quality results could not be checked in a subsequent inspection and tests of the product. But even if this process involved old equipment it is still the final result of a number of operations and necessitates strict observance of these operations and their required sequence [3]. The team has outlined the following activities in order to help improve the painting quality [4]:

- Preparing operation performance instructions that set out the process parameters, process sequence, some special observations, adjustments and control;
- Employ or train adequately qualified personnel;
- Assess the suitability and applicability of equipment involved and quality of paint used.

Download free eBooks at bookboon.com

To overcome the problem of occurring defects in finished washers and eliminate the need of reworking one of the production managers suggested to employ the Paretto's technique [6]. This method will help identify defects of higher significance to others, which are greater in number but far more insignificant, i.e. the highest value defects will thus be identified (in terms of cost and time) or those occurring most frequently [6]. Additional studies will have to be conducted afterwards to identify the causes for these defects and outline some corrective activities to eliminate these defects. The team agreed to include such a study in the overall action plan.

3.5 Market & production line

The working team has examined the characteristics of the washing machines manufactured in the company and came out with the conclusion that the latest Superwash Combo model is superior to all other models. This washer features modern design, saves energy thus contributing to environment protection, it has compact size and saves space. It is simultaneously low-cost product, which makes it highly competitive on the market. One proof of this is the high sales volume and the need to increase the production volume (Figure 5). All said above is an indication that customers prefer latest, modern and functional products available on the market, which facilitate servicing to a maximum extend and aesthetically please the eye with their appearance.

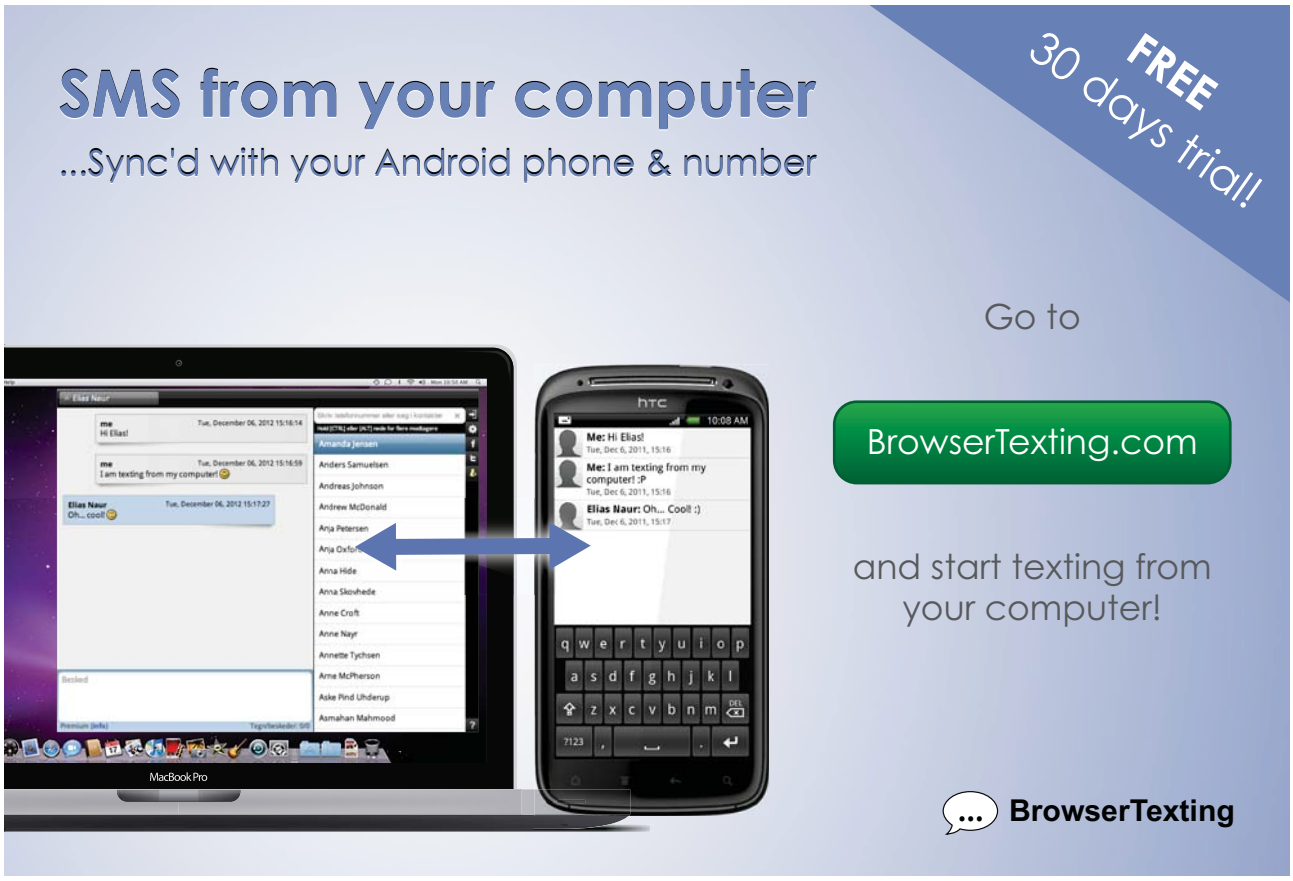

Download free eBooks at bookboon.com

Click on the ad to read more

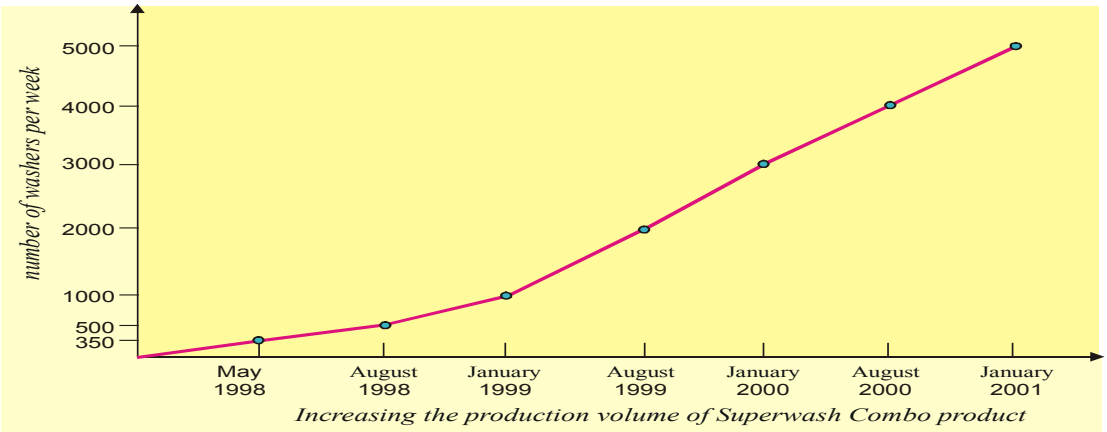

Figure 5

The final opinion was to adopt the suggestion of taking the double-tub model (an 18-year old design) out of production along with the vertical drum top-loading model. The proposal presented to the Board was backed up with a preliminary marketing analysis and identification of the life-cycle of the two older washers (Figures 6 and 7) The life cycle analysis has also involved the value of profit from the sales of these two products. When the market-required number of products from the production programme is less than the profitability threshold, provision is made for such washers to be taken out of the production programme [7].

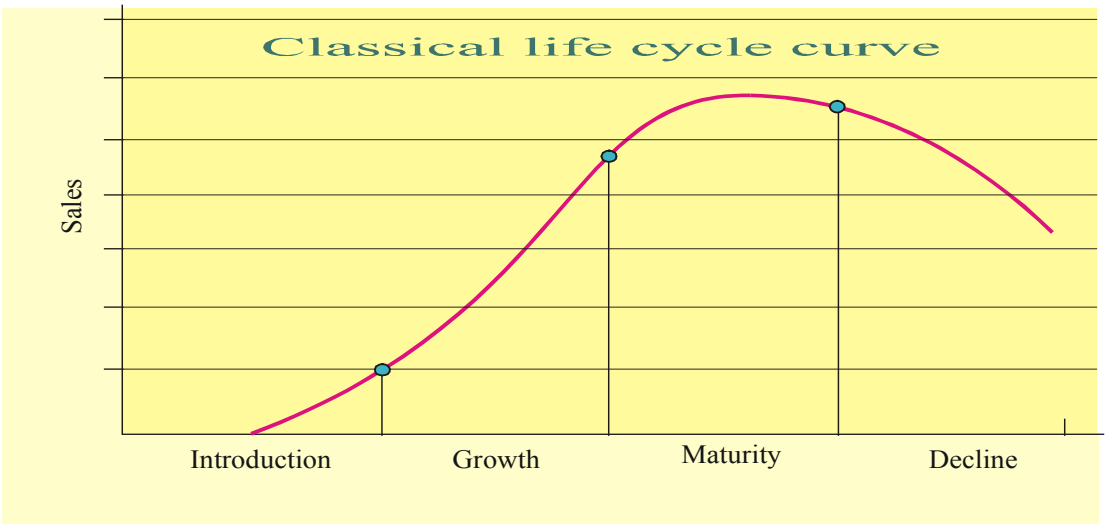

Figure 6

Download free eBooks at bookboon.com

Introduction	Growth	Maturity	Decline
Sales volume			
Product introduction	Growth of sales	Market saturation	Decline of sales
Customers			
Small number	Increased number of customers and sales volume	Selective sales to selected customers	Sudden drop in the number of customers and volume of goods sold, decline and stop of production
Competitors			
Small number	Increased number of competitors	Severe competition. Prices go down	Competition eliminated. Prices drop to maintain sales volume

Figure 7: Characteristics of product life cycle stages

It is possible in this situation to use the freed production facilities to manufacture the Combo product and this concept has been visualised (compared to numbers of washing machines) in the following diagram:

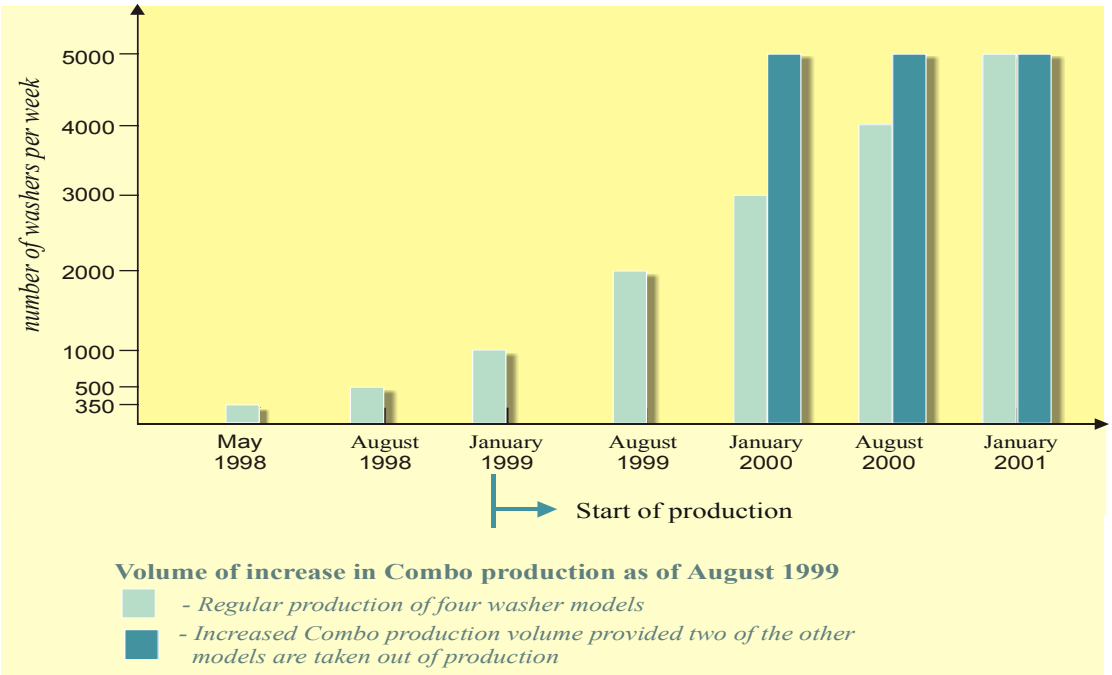

Figure 8

The chart shows that the Combo production capabilities will be rapidly increased. The increased production volume will allow for some reduction in expenditure involved leading to a reduction in cost as a means to increase the sales volume. The following considerations will have to be observed here [7]:

- Care should be given not to reduce prices too much lower than competitive ones in order to avoid unjustified reduction in the profit rate;
- Care should be taken not to make prices much higher than competitive products due to possible risks of wasting customers.

Download free eBooks at bookboon.com

3.6 Environmental impact

In finding solutions to the set task of increasing the production volume the team could not skip the issue of environmental impact this would have. The following questions were raised:

- Will this lead to increased energy consumption?
- What waste will this generate and what will be the quantity of waste per unit product; will waste result in problems in handling it?
- What will be the influence on atmospheric emissions?
- Will the production process be safe and will there be safety problems?

Energy saving is a programme of reducing expenditure that leads to improvement of the environment through reductions in harmful sulphur oxides, sodium oxides, carbon oxides, hydrogen oxides and particulate residues [7].

Looking at the problem from this aspect, the team concluded that the Combo meets modern requirements for reduced energy consumption compared to similar products in the field [7]. The combined Combo unit also saves space compared to other models, which involves the use of far less materials of improved functional capabilities.

Download free eBooks at bookboon.com
Click on the ad to read more

The quality improvement programme for component parts and complete products will affect the reliability and life expectations of the Combo product. It will also reduce repair and maintenance, spare part replacement and some additional activities that will have impact on environment [8]. Faultless operation and many years of exploitation will allow the Combo product to be subjected to recycling and re-use of materials at the end of its life cycle.

The team examined the idea of developing a programme that will reduce waste products with a special accent on the fact that this programme will help increase the efficiency of production resource usage, the overall activity efficiency. The aim is to make maximum use of all components and other resources and materials that will result in the generation of products and not waste.

In order to persuade the senior management in the need to adopt and implement such a programme the following obvious advantages of reducing waste were stressed [8]:

- Protection of the environment;
- Direct reduction in expenditure;
- Indirect reduction in expenditure;
- Jobs safety;
- High social esteem;
- Support of the share holders;
- Technological advantages.

3.7 Machines

The manufacturing process at the DOMAPP factory involves the production of their own component parts, delivery of sub-supplier assemblies and assembling the complete product. The projected increase in production volume will put additional load on the machines and equipment available and give rise to possible machine failures. The need for providing adequate maintenance and repair of the machines is primarily determined by the deteriorated technical and economical characteristics of the machines and equipment resulting from their physical and moral wear. Some disastrous consequences in the following spheres might be possible if a programme for maintaining and ensuring the life of machines and equipment is not adopted [6]:

- Life and health of servicing personnel;
- environment;
- quantity and quality of manufactured washing machines;
- economic results.
- It will be necessary to prepare an overhaul plan that is based on the following factors:
- initial technical condition of machines and equipment;
- wearing factors;

Download free eBooks at bookboon.com

- service time;
- intensity of usage;
- usage conditions and surroundings;
- method of usage (in accordance with technical provisions or allowing severe mistakes).

Preparing such an overhaul plan will allow identifying the expense it will involve quite in advance, along with the time required to do it and the purchasing of necessary spare parts needed.

A problem area for possible failures was identified in the welding facility. An eventual failure in welders would disturb the production process. Therefore, a preventive strategy in performing overhaul activities is to be recommended for the machines in this production area. This strategy involves the following activities [8]:

- inspection and measuring the degree of wear on welders;
- thorough maintenance of welders realised by means of constant care expressed in: cleaning, lubricating, corrosion protection, tightening loose connections, minor repair activities aimed at maintaining the set technical fitness;
- identifying fast wearing parts and purchasing a required stock of them to ensure for possible failures;
- modernisation or replacement of physically or morally worn out technical equipment.

The involvement of a CNC machine was identified as one weakness in the operation of the available machine inventory. The problems appear in two directions: constant machine breakdowns and programming difficulties. CNC machines feature a rather complex design that employs high-level electronic equipment. When a maintenance team has had no experience with such machinery it cannot always deal with breakdowns [7]. A special maintenance team will be necessary to be set up that should include one mechanical engineer, a fitter and an electronic specialist. This team should be trained on the site by an expert of the machine manufacturer or in the facilities of the machine manufacturer.

In order to solve the second problem with the CNC machine it will be necessary to employ in company or train an operator-programmer to operate this machine. Another solution is to subcontract a computer company for the programming activities and the factory will then only have to ensure the required process documentation specifying the component machining process sequence. Proper operation of the CNC machining centre will allow it to manifest its production efficiency capabilities. Production reports will change the negative attitude among factory employees and will pave the way to introducing new technologies and implementation of high-efficiency machines and equipment. Lack of such machines predetermines low production volume and high labour expenses (18% of sales volume) [6].

Download free eBooks at bookboon.com

3.8 Process technology & management

A factor that might influence the eventual increase in the Combo production volume is the drawing up of a process technology profile. This includes [8]:

- developing the documentation for various manufacturing processes;
- developing documentation for the specialized process machinery and equipment;
- developing the documentation for the required means of mechanisation and process automation;
- developing the specialised process machinery and equipment.

At present the factory has developed manufacturing techniques for the production of small batches of the Combo product. An increase in Combo production volume will necessitate modifications to these techniques to ensure maximum loading of manufacturing facilities. This process will have to follow the following sequence [9]:

- analysis of manufacturing facilities load;
- analysis of the production programme;
- analysis of the design compatibility of the products, assemblies and components being produced;
- grouping those of them that are compatible in design characteristics;
- analysis of the process technologies applied;

Download free eBooks at bookboon.com
Click on the ad to read more

- developing single manufacturing technologies applicable to the entire group of compatible products, assemblies and component parts;
- analysis of organisational forms of production;
- developing highly efficient process equipment and machinery;
- improving the organisational form of production of component parts, assemblies and products.

The increase in the Combo production volume will call for adaptation of currently available production facilities (efficient capacity) to the required facilities by means of [9]:

- planned additional subcontracting externally manufactured orders;
- additionally employed labour;
- purchasing modern technological equipment;
- technological and organisational improvement.

Production planning and distribution is also an important element in increasing production efficiency that involves:

- planning the annual production programme that includes all washing machine models produced;
- distribution of the annual production programme;
- planning the required quantities of parts and assemblies;
- developing process route plan;
- calendar planning (developing network diagrams);
- preparing production orders;
- planning job positions loading;
- providing the equipment and documentation required for each job position.

The selection and maintaining of a rational form of production department organisation is one of the tasks of the managerial staff at the DOMAPP factory. For example, the welding facility in the factory needs special tooling and jigs that have to be taken out of the tool and jig store. This whole process requires about an hour to do. It is necessary to consider some optimisation of the production department distribution to allow easy access to tools and jigs. Figure 9 shows one suggestion for such a distribution [9].

Download free eBooks at bookboon.com

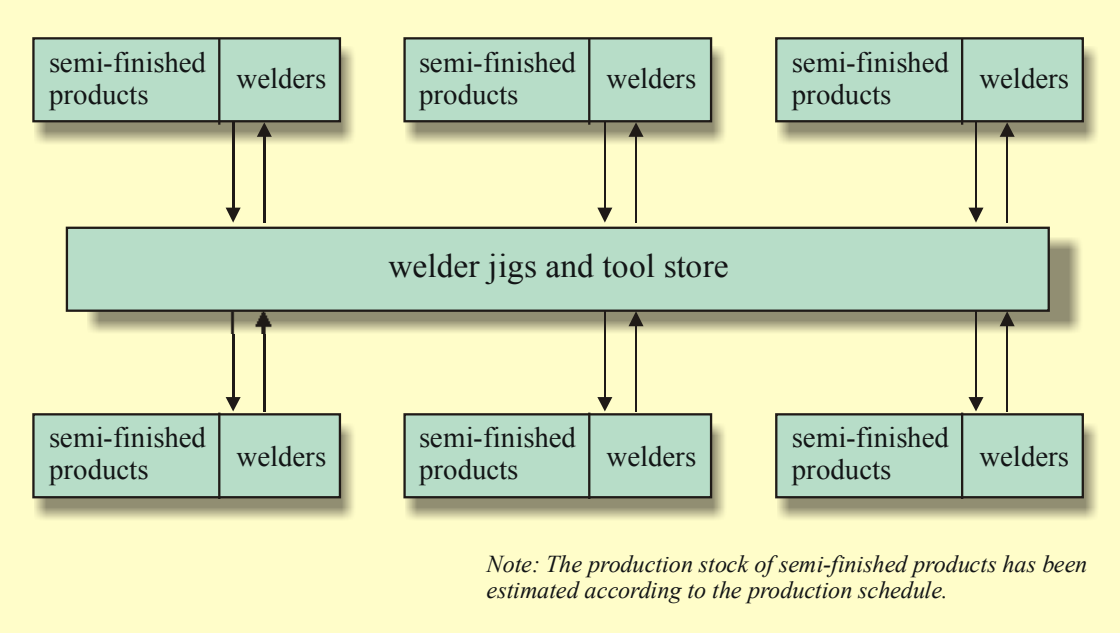

Figure 9

3.9 Raw materials & component parts

Then washing machines being manufactured in the factory consist of standard unified bought-in assemblies and some original component parts manufactured on the spot in the factory. Some of the assemblies are delivered by other factories of the division, like for example the PC boards manufactured by the Electro factory. One necessary requirement for the fulfilment of the production programme is timely delivery and production of these products, assemblies and component parts. One major priority for the factory is to ensure the delivery of those materials without which the production process will not start. Such problem exists in the delivery of the PC boards. The factory at Bournemouth does not supply enough boards and does not take Swansea's needs too seriously. A solution to this problem could be found by asking the corporate management for cooperation by means of signing supply agreement between the two factories [10]. Such an agreement will provide the legal commitment of the Electro factory.

Another alternative exists to replace the metal drum of the Combo for a plastic one. This change will make the entire construction lighter and improve the material recycling possibilities but will on the other hand reduce the work load in the pressing and welding facilities which might in turn result in personnel cut downs and social tension. The working team has come out with a suggestion to the design department and the marketing department of the factory to assess the possibilities to produce an alternative plastic drum Combo to be offered on the market separately [10]. Thus, various customer requirements will be met and the market situation will be used to establish the current Combo model.

Download free eBooks at bookboon.com

3.10 Conclusions

Having completed the problem analysis work the working team has systemised its suggestions in solving these problems in a general report to the Board of directors of the company. This summarises in the order of priority the major problems that have to be solved very quickly and which will result in an increase in Combo production volume:

1. Stop the production of the two older washing machine models.
2. Follow the programme for dealing with employees.
3. Follow the programme for improving the quality.
4. Improving production efficiency by improving manufacturing process techniques and the organisational and managerial structure.

References

1. A.M. Daabub, H.S. Abdalla, A computer-based intelligent system for Design for Assembly. *Computers & Industrial Engineering, Volume 37, Issues 1–2, October 1999, Pages 111–115.*
2. Martin Rudberg, B. Martin West, Global operations strategy: Coordinating manufacturing networks. *Omega, Volume 36, Issue 1, February 2008, Pages 91–106.*
3. Y.K. Shetty, Aiming high: Competitive benchmarking for superior performance. *Long Range Planning, Volume 26, Issue 1, February 1993, Pages 39–44.*

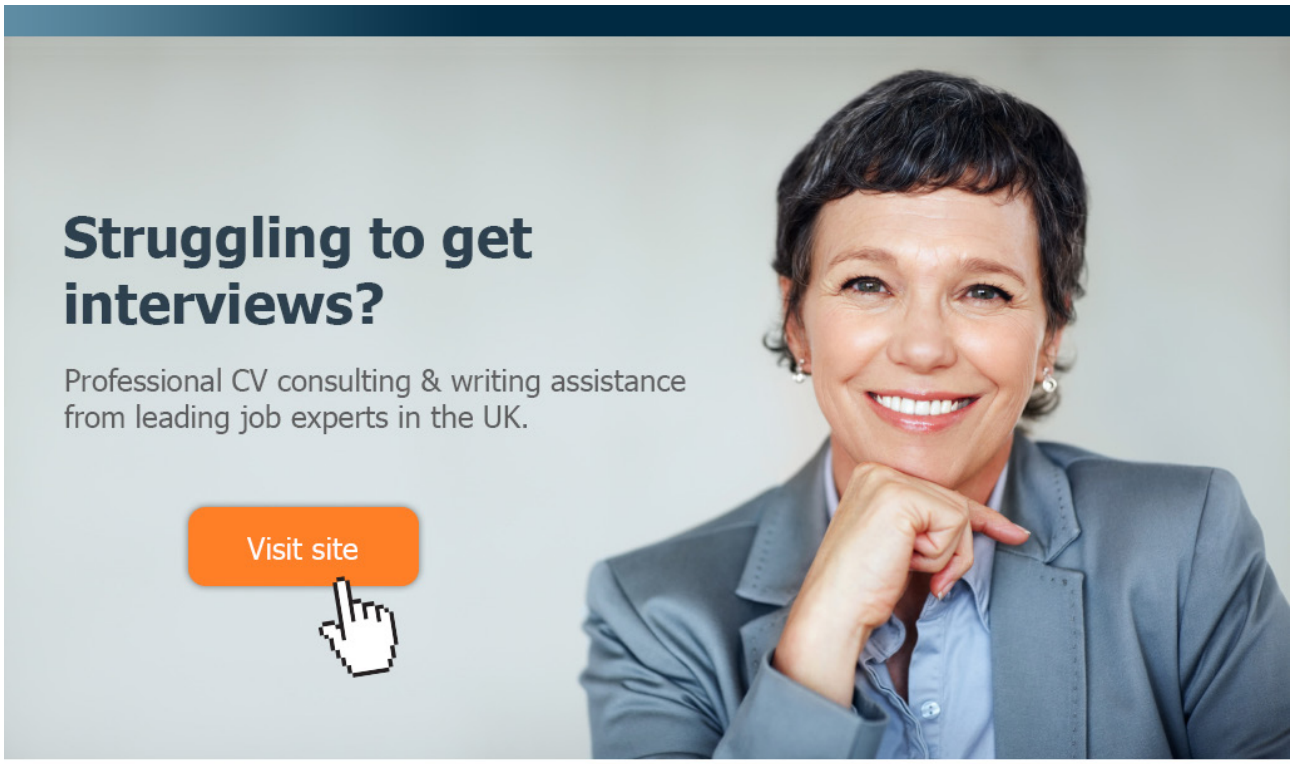

Take a short-cut to your next job!
Improve your interview success rate by 70%.

TheCVagency
Visit thecvagency.co.uk for more info.

Download free eBooks at bookboon.com

Click on the ad to read more

4. Andrew Tobias, O.R. techniques for use in redesigning manufacturing and associated business systems. *European Journal of Operational Research, Volume 51, Issue 2, 27 March 1991, Pages 168–178*.
5. B. Malakooti, A gradient-based approach for solving hierarchical multi-criteria production planning problems. *Computers & Industrial Engineering, Volume 16, Issue 3, 1989, Pages 407–417*.
6. John D. Blair, Kenneth D. Ramsing, Quality circles and production/operations management: Concerns and caveats. *Journal of Operations Management, Volume 4, Issue 1, November 1983, Pages 1–10*.
7. W. Eversheim, Th. Brachtendorf, L.F. Koch, Changes in the Role of Production Management in the CIM-Era. *CIRP Annals* – Manufacturing *Technology, Volume 35, Issue 2, 1986, Pages 505–512*.
8. A. Gunasekaran, T. Martikainen, P. Yli-Olli, Flexible manufacturing systems: An investigation for research and applications. Manufacturing *Research and Technology, Volume 23, 1995, Pages 3–44*.
9. Kim Hua Tan, Chee Peng Lim, Ken Platts, Hooi Shen Koay, An intelligent decision support system for manufacturing technology investments. *International Journal of Production Economics, Volume 104, Issue 1, November 2006, Pages 179–190*.
10. D. Cetindamar, S.N. Wasti, H. Ansal, B. Beyhan, Does technology management research diverge or converge in developing and developed countries? *Technovation, Volume 29, Issue 1, January 2009, Pages 45–58*.

Download free eBooks at bookboon.com

4 Software engineering and data communications: an automatic laminating plant

4.1 Enviromental model

4.1.1 Context diagram [1]

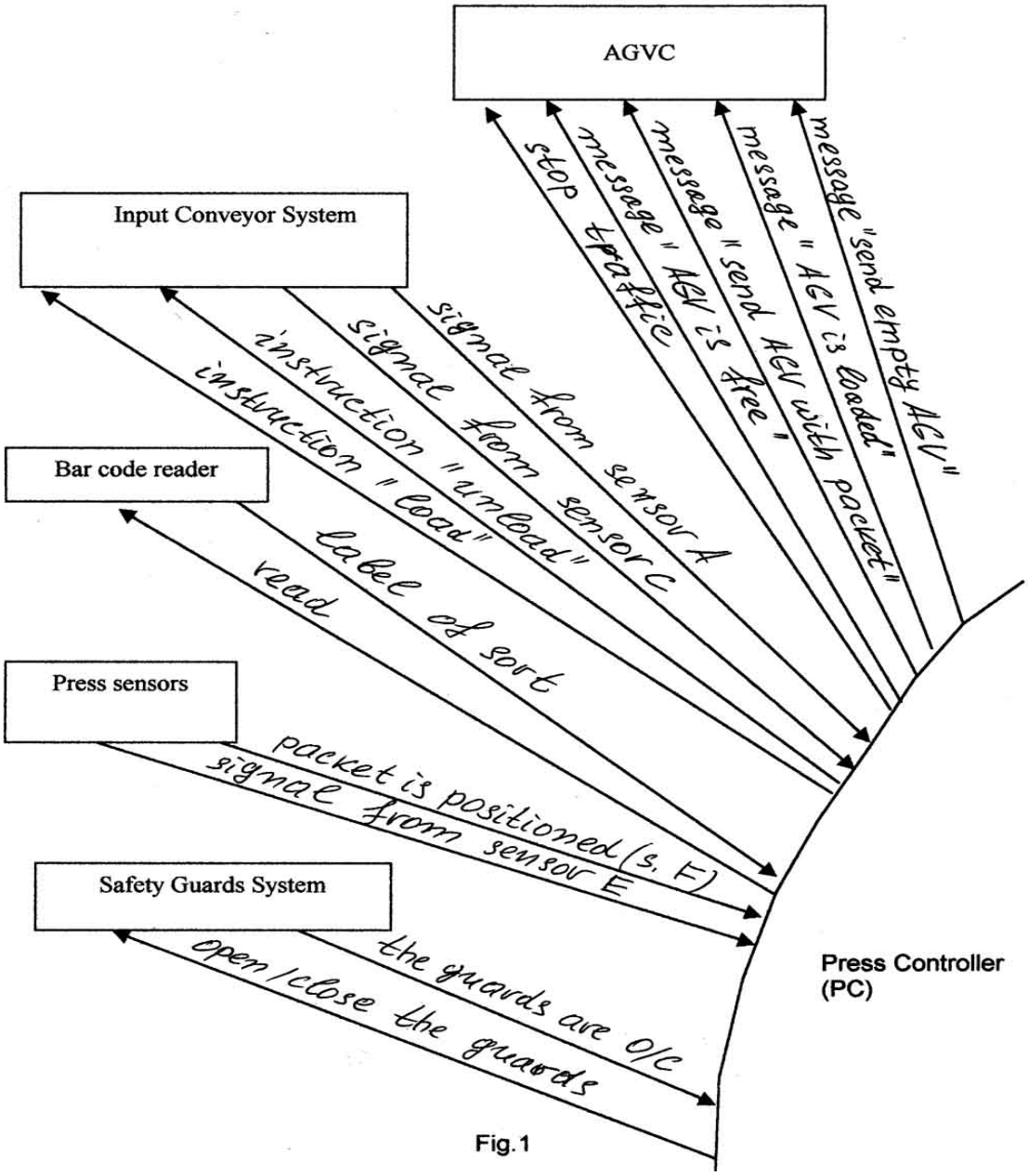

Fig.1

Download free eBooks at bookboon.com

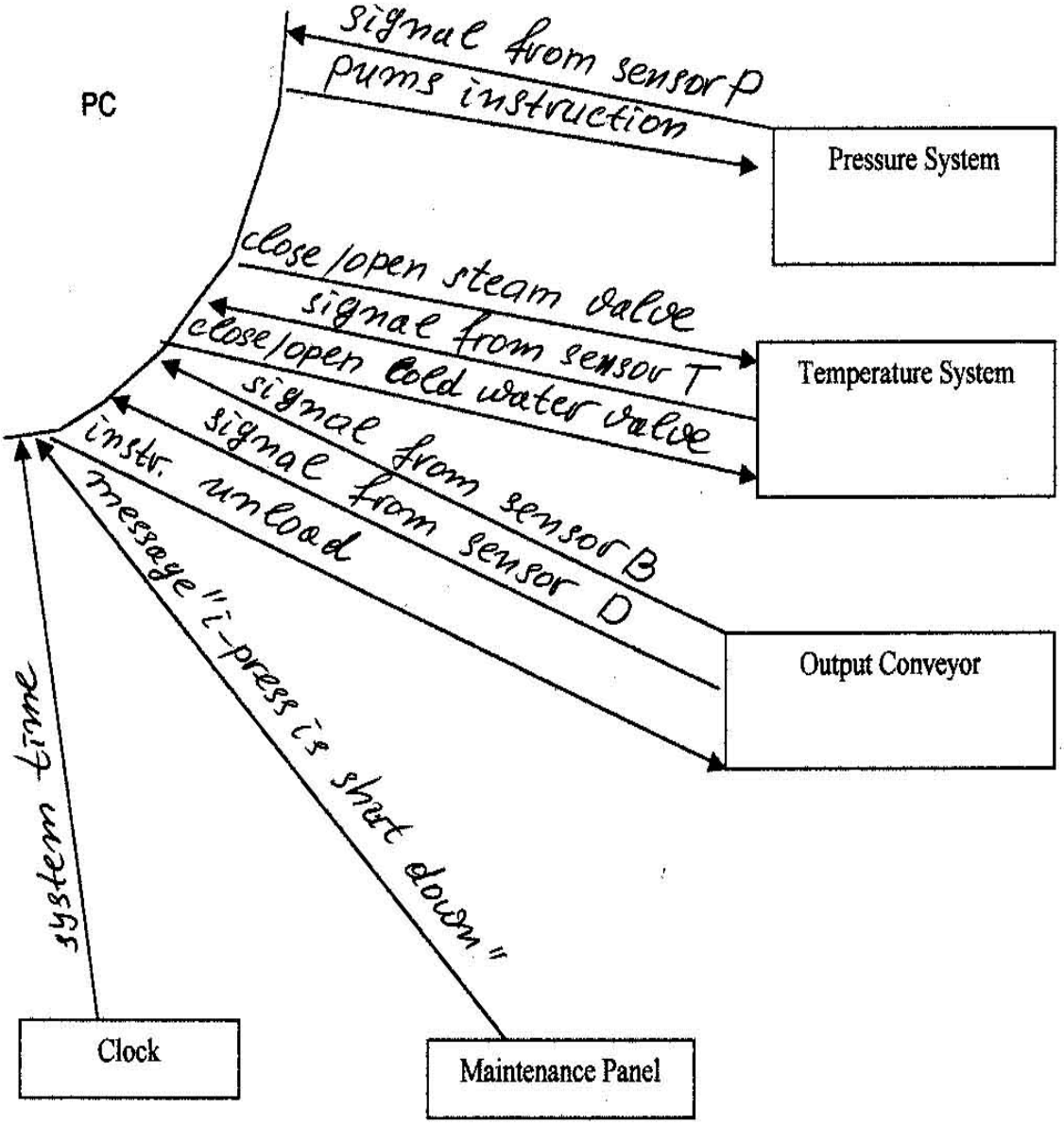

CONTEXT DIAGRAM – CONTINUATION

4.1.2 Event list for press controller (pc)

i-Input Conveyor's Viewpoint i=1,2,3,4		
1. Press works (press process enable)	Direct	C/D
2. conveyor is empty (request a AGV for conveyor)	Direct	D
3. AGV arrived (start a press packets unloading)	Direct	C
4. Press packet is on the conveyor (send a message to AGVC that AGV is free)	Direct	C

Download free eBooks at bookboon.com

5. Press empty (instructs the conveyor to load the press pack and read a bar code)	Direct	C
Safety guards system Viewpoint		
1. Packet is correctly positioned (instructs to close the safety guars)	Direct	C/D
2. Platen's Temperature is normal (instructs to open the safety guars)	Indirect	C
Pressure Viewpoint		
1. Safety guards are closed (instructs to close the press platens and set the appropriate hydraulic pressure)	Direct	C
2. Pressure is setting (control and support the pressure duration of the bonding cycle)	Indirect	C
3. Cycle is over – timer (instructs to shut of the pressure)	Temporal	C
Temperature Viewpoint		
1. Safety guards are closed (Open a steam valve)	Direct	C
2. Temperature is setting (control of steam valve)	Indirect	C
3. Cycle is over – timer (instructs to shot of the steam valve and open cold water valve)	Temporal	C
4.Platen's temperature is normal (instructs to close water valve and open press platens and safety guards)	Indirect	C
i-Output Conveyor's Viewpoint i=1,2,3,4		
1. Safety guards are open (instructs to unloading a laminate)	Direct	C
2. Conveyor is empty (Instructs to unloading a laminate)	Direct	C
3. Laminate is on the conveyor (request a empty AGV)	Direct	C
4. AGV arrived (instructs to load the laminate on the AGV)	Direct	C
5. Laminate is on the AGV (message to AGVC)	Direct	C
Maintenance Viewpoint		
1. i – press shut down (send message to AGVC)	Direct	C
2. Laminate is on the output conveyor (send message to AGVC)	Direct	C
3. Press packet is on the input conveyor (send message to AGVC)	Direct	C

Download free eBooks at bookboon.com

4.2 Behavioural model

The basic sub-systems include [2]:

1. Pack unloading control sub-system;
2. Pack loading control sub-system;
3. Laminate unloading control sub-system;
4. Safety guards control sub-system;
5. Pressure control sub-system;
6. Temperature control sub-system;
7. Traffic control sub-system;

The reason for introducing this particular distribution into the system is based on the design and functional purpose of controlled devices. The pressure and temperature control sub-systems are classical type feedback systems. The following sensor designations have been introduced for shortness in the above Figures:

A – "AGV with pack in position available at the input conveyor" sensor;
B – "empty AGV available at the output conveyor" sensor;
C – "pack in position on the input conveyor" sensor;

Download free eBooks at bookboon.com

Click on the ad to read more

D – “laminate in position on the output conveyor” sensor;
E – “pack present into the press” sensor;
F – “pack positioning into the press” sensor;
T – thermocouple;
P – pressure sensor.

4.2.1 Low level data / control flow diagrams

Sub-System Controlling Laminate Press Pack Positioning On The Input Conveyor

The sub-system controlling laminate press pack positioning on the input conveyor receives signals from the following sensors and devices [2]:

- maintenance panel signal (press in use/out of use)
- sensor C (pack available/not available)
- sensor A (AGV available/not available)

The sub-system generates the following output signals:

- message to the AGV controller that AGV has been unloaded;
- instruction to unload pack from the AGV (this instruction is supplied to the AGV unloading drives)

The events that control the process are [3]:

- AGV arrival;
- Press operating condition;
- Pack positioned on the conveyor.

Figure 2 shows the data/control flow diagram.

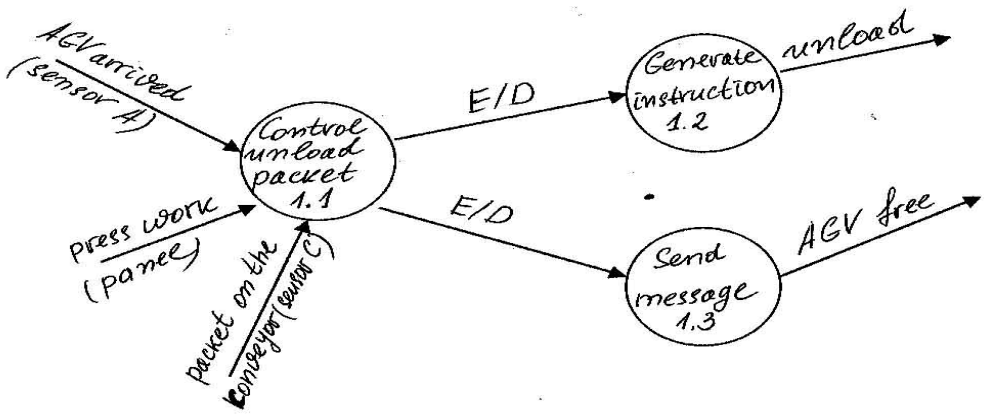

Figure 2

Download free eBooks at bookboon.com

Sub-System Controlling Laminate Press Pack Positioning In The Press

The sub-system controlling the laminate press pack positioning in the press receives signals from the following sensors and devices [3]:

- maintenance panel signal (press in use/out of use);
- sensor C (pack available/not available);
- sensor E (pack available/not available);
- bar code identification on the pack.

The sub-system generates the following output signals [4]:

- message to the AGV controller to send an AGV loaded with press laminate packs;
- Instruction to load the pack from the conveyor into the press and simultaneously read the bar code information;

The stored data are the temperature, pressure and pressing time. The events controlling the process include [3]:

- press empty;
- press operating condition;
- conveyor empty.

Figure 3 shows the data/control flow diagram.

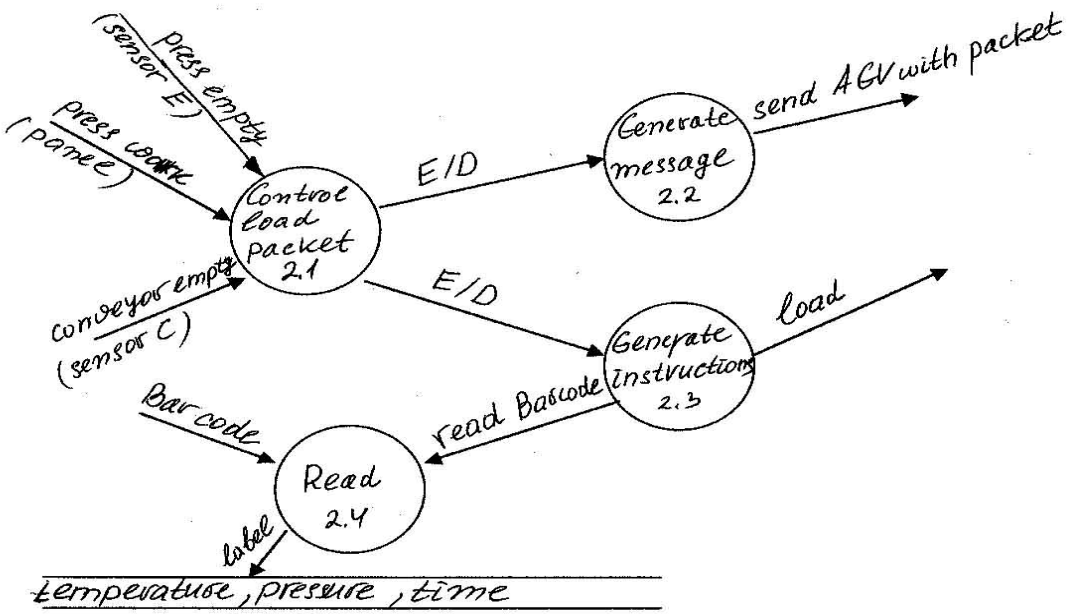

Figure 3

Download free eBooks at bookboon.com

Safety Guards Control Sub-System

The safety guards control sub-system receives signals from the following sensors and sub-systems [5]:

- sensor F;
- temperature control sub-system ("shut safety guards" instruction);
- pack loading control sub-system ("shut safety guards" instruction);

The sub-system generates safety guards shut or open instructions. The event controlling the process is [4]:

- pack accurately positioned (sensor F).

Figure 4 shows the data/control flow diagram.

Download free eBooks at bookboon.com
Click on the ad to read more

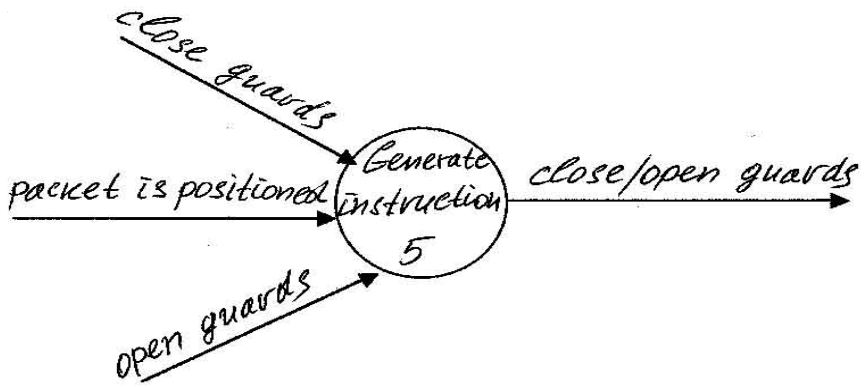

Figure 4

Temperature Control Sub-System

The Temperature control sub-system receives signals from the following sensors and sub-systems [4]:

- sensor T;
- sub-system controlling loading of press packs into the press required press temperature, down temperature and press time);
- system time timer

The sub-system generates the following output signals [4]:

- steam valve open/shut off instruction
- cold water valve open/shut off instruction;
- safety guards open instruction.

The events involved in the control of the process are [4]:

- safety guards closed;
- required temperature is reached;
- required pressing time is complete;
- platen temperature is low;

Figure 5 shows the data/control flow diagram.

Download free eBooks at bookboon.com

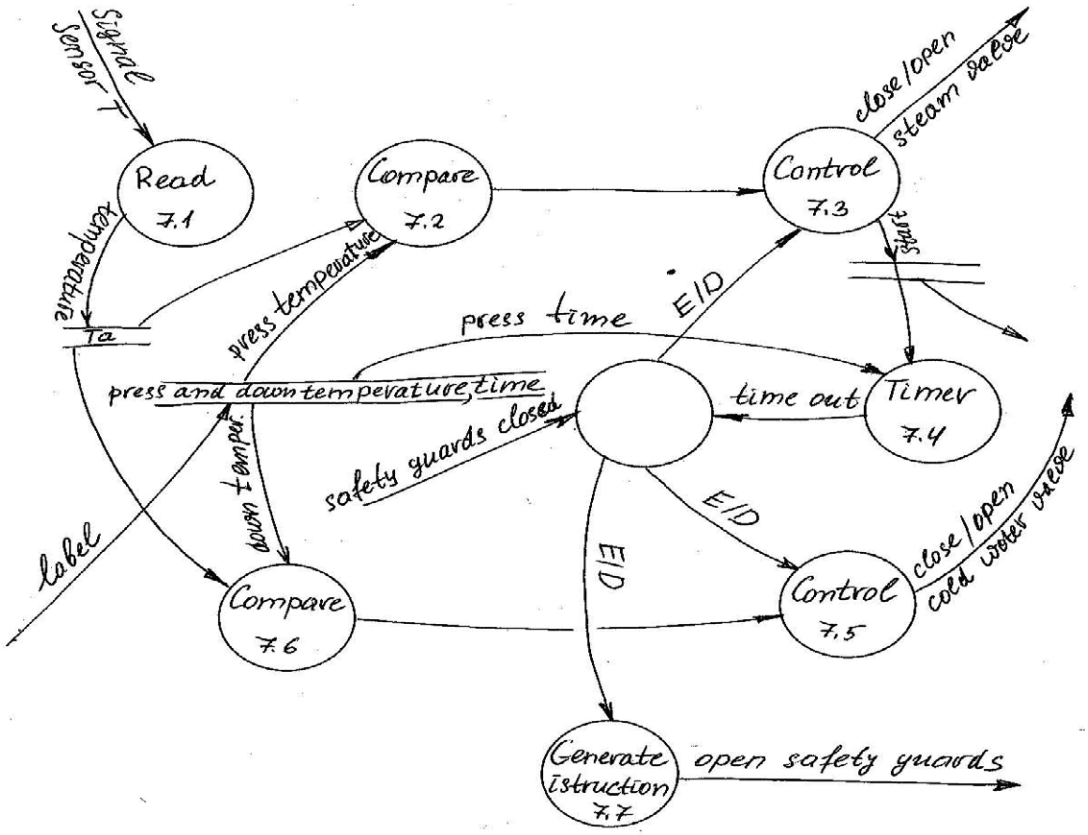

Figure 5

Pressure Control Sub-System

The pressure control sub-system receives signals from the following sensors and devices [5]:

- signal from sensor P;
- process start signal from the temperature control sub-system;
- bar code reader indication (pressure and time).

The sub-system generates the following signals [5]:

- pump control instruction;

Figure 6 shows the data/control flow diagram.

Download free eBooks at bookboon.com

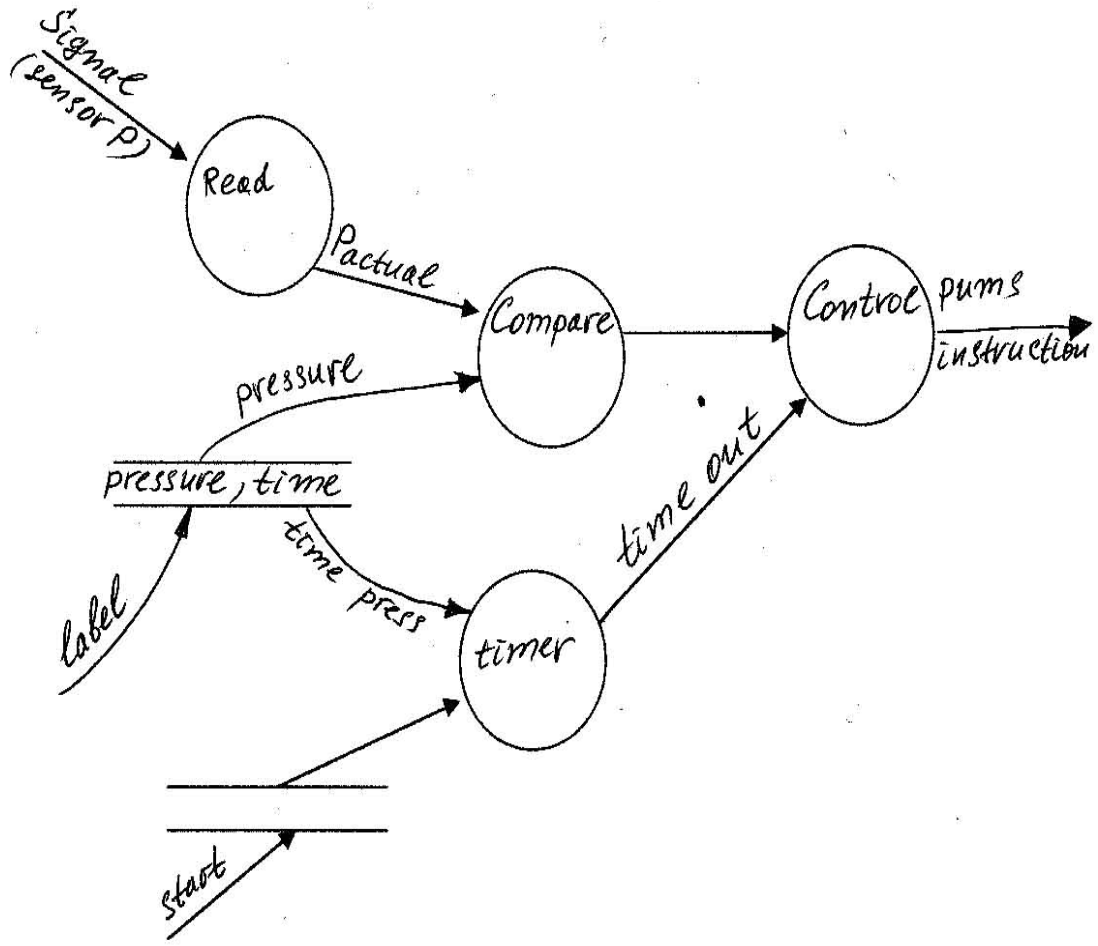

Figure 6

AGV Traffic Control Sub-System During Maintenance Shutdowns

The AGV traffic control sub-system receives signals from the following sensors and devices [4]:

- signal from the maintenance panel (press in use/out of use);
- sensor A (a pack is in position/not available in the input conveyor);
- sensor B (a pack is in position/not available in the output conveyor).

The sub-system generates the following output signals [5]:

- message to the AGV controller to stop the AGV traffic
- message to send an empty AGV to carry away other packs left on the conveyors of presses which are out of use;

Figure 7 shows the data/control flow diagram.

Download free eBooks at bookboon.com

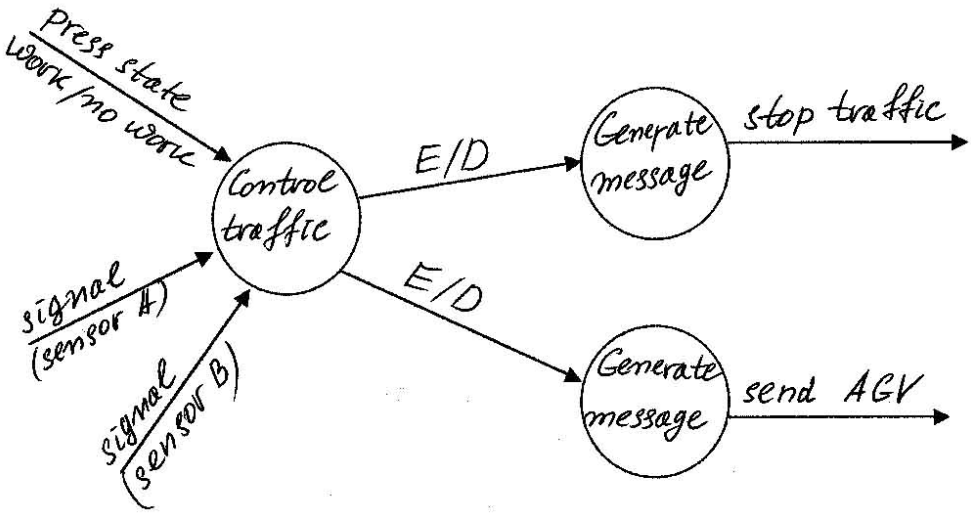

Figure 7

Laminate Unloading Control Sub-System

The laminate unloading control sub-system receives signals from the following sensors and devices [5]:

- "laminate in position on the conveyor" signal from sensor D;
- sensor B (AGV available in position by the output conveyor).

Download free eBooks at bookboon.com

Click on the ad to read more

The sub-system generates the following output signals [6]:

- laminate load instruction;
- "AGV loaded" message to the AGV controller

The event which controls the process is "safety guards opened" [6]. Figure 8 shows the data/control flow diagram.

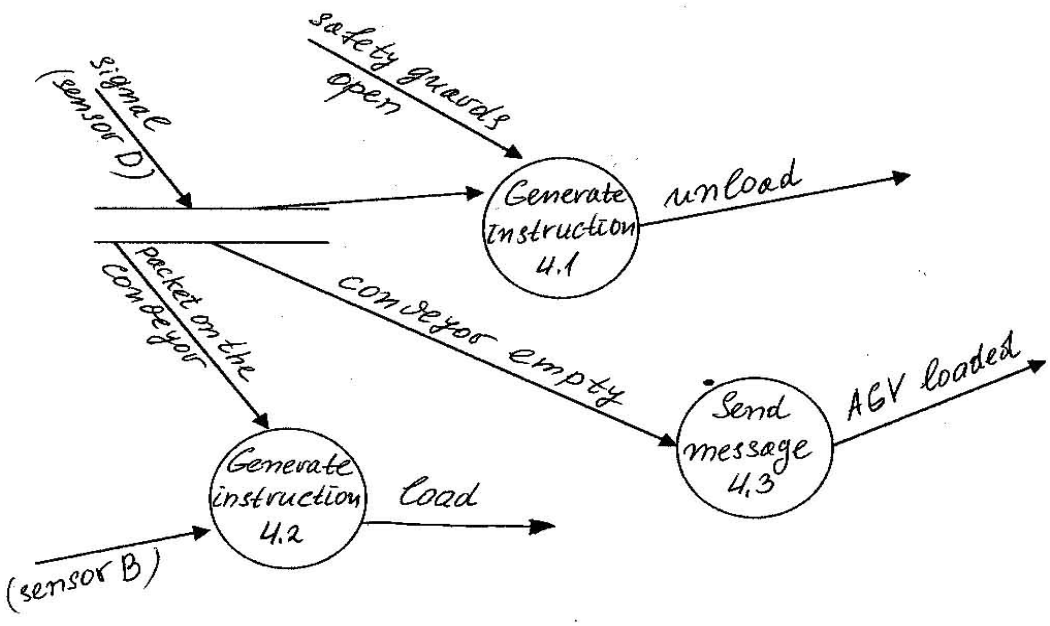

Figure 8

4.2.2 Low level state transition diagrams

Sub-System Controlling Laminate Press Pack Positioning On The Input Conveyor [7]

Figure 9 shows the state transition diagram.

Download free eBooks at bookboon.com

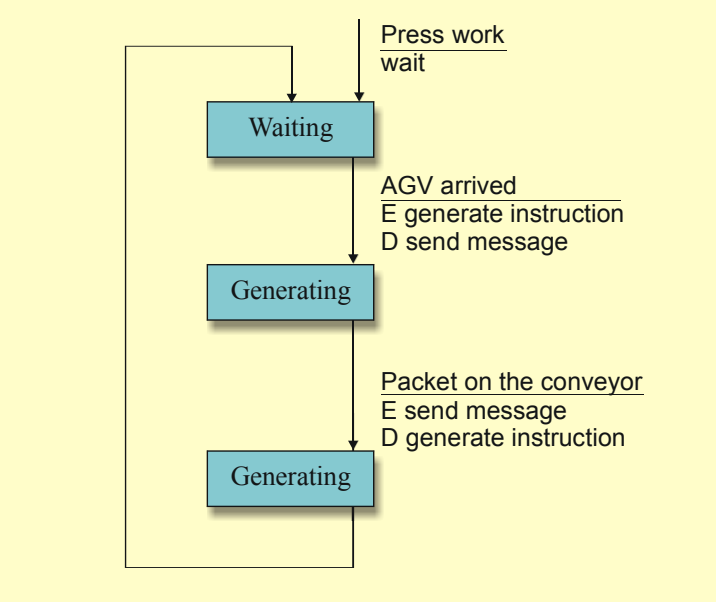

Figure 9

Sub-System Controlling Laminate Press Pack Positioning In The Press

Figure 10 shows the state transition diagram [7].

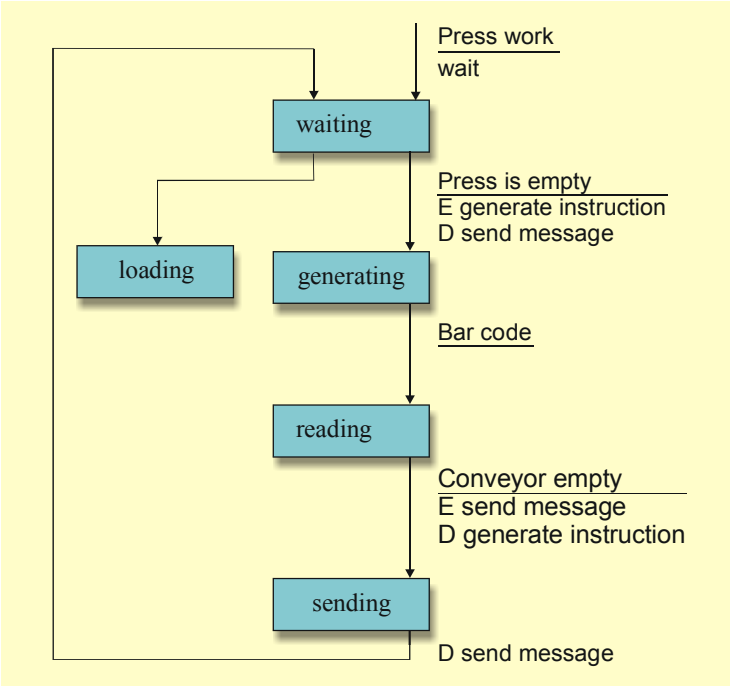

Figure 10

Download free eBooks at bookboon.com

Safety Guards Control Sub-System

Figure 11 shows the state transition diagram [7].

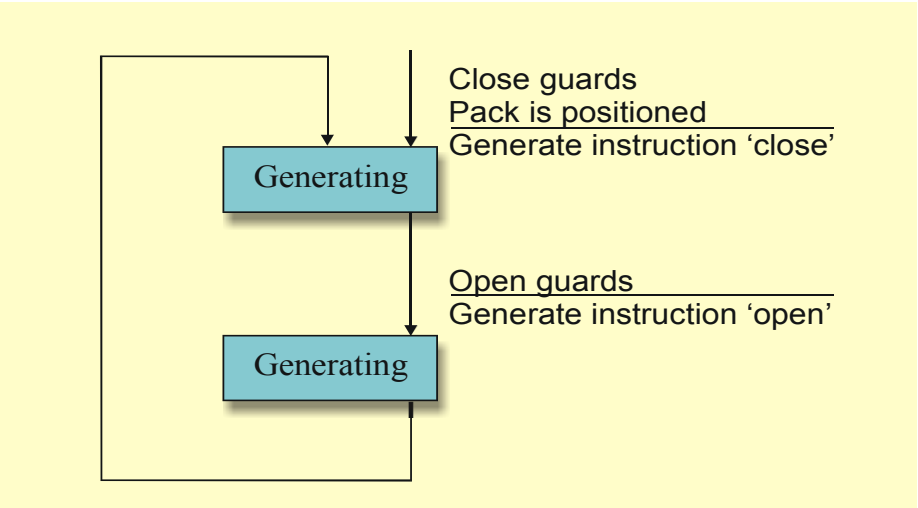

Figure 11

Temperature Control Sub-System

The state transition diagram is shown in Figure 12 [8].

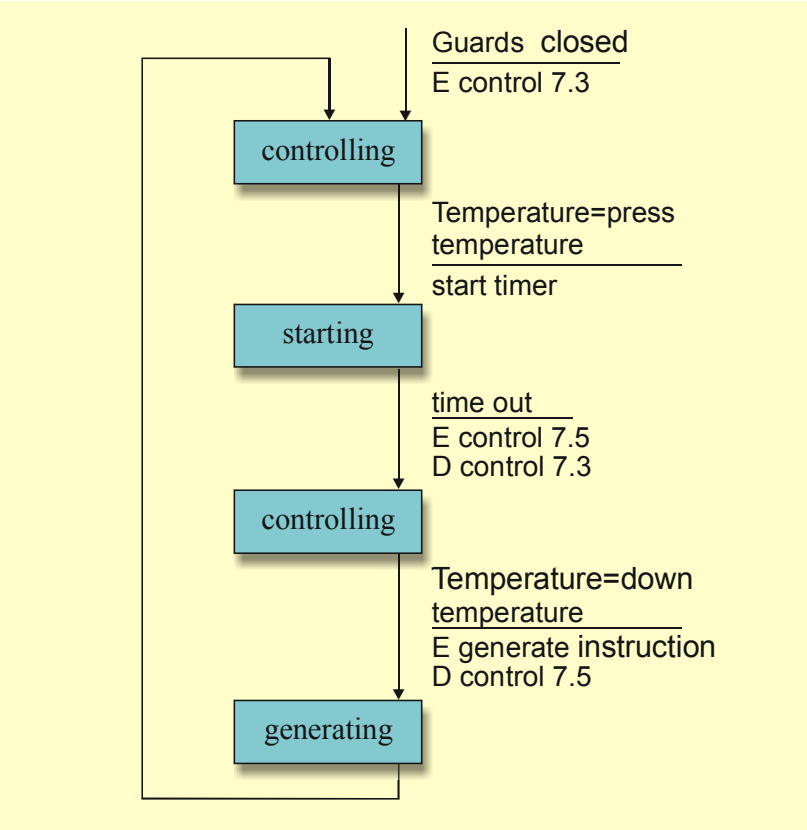

Figure 12

Download free eBooks at bookboon.com

Pressure Control Sub-System

Figure 13 shows the State transition diagram [8].

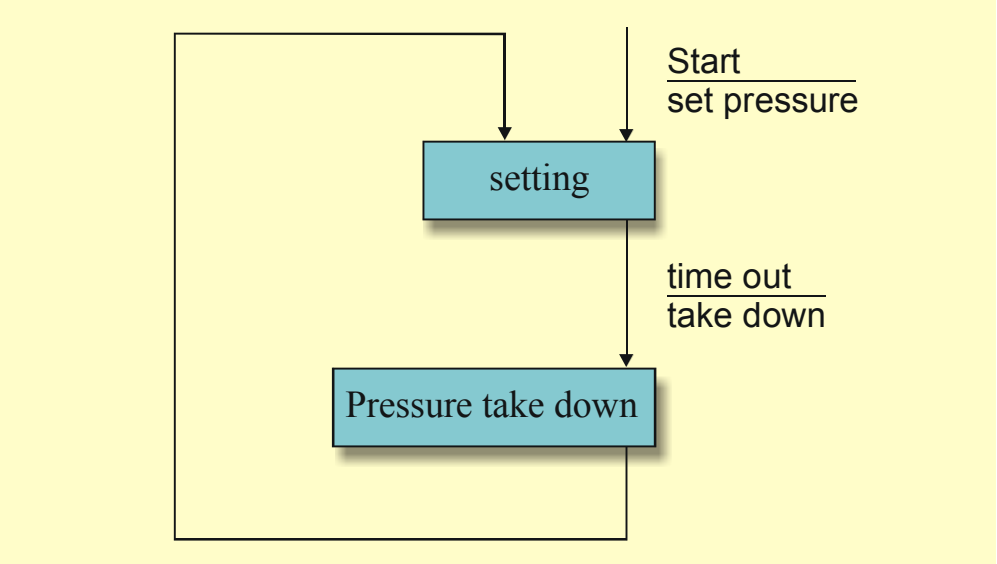

Figure 13

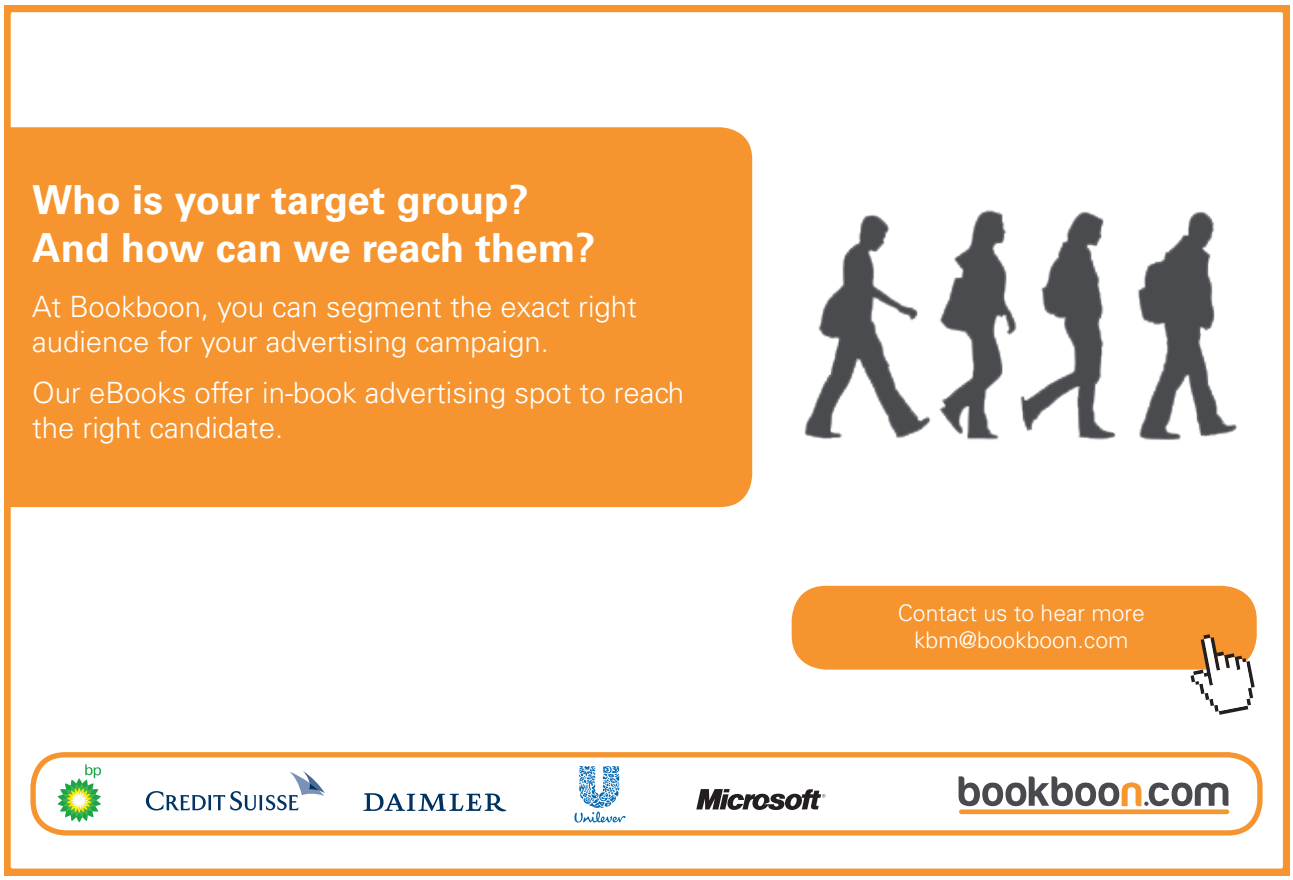

Download free eBooks at bookboon.com

Click on the ad to read more

AGV TRAFFIC Control Sub-System During Maintenance Shutdowns

Figure 14 shows the state transition diagram [9].

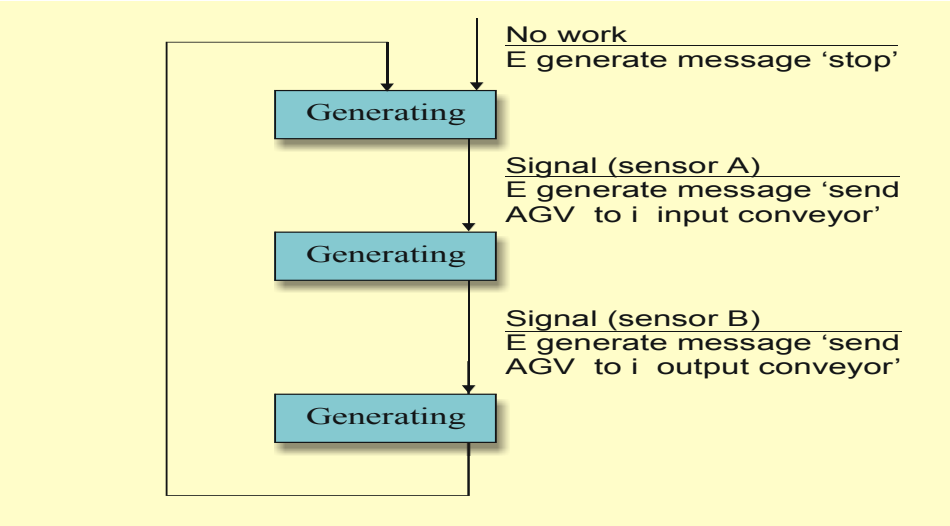

Figure 14

Laminate Unloading Control Sub-System

Figure 15 shows the state transition diagram [10].

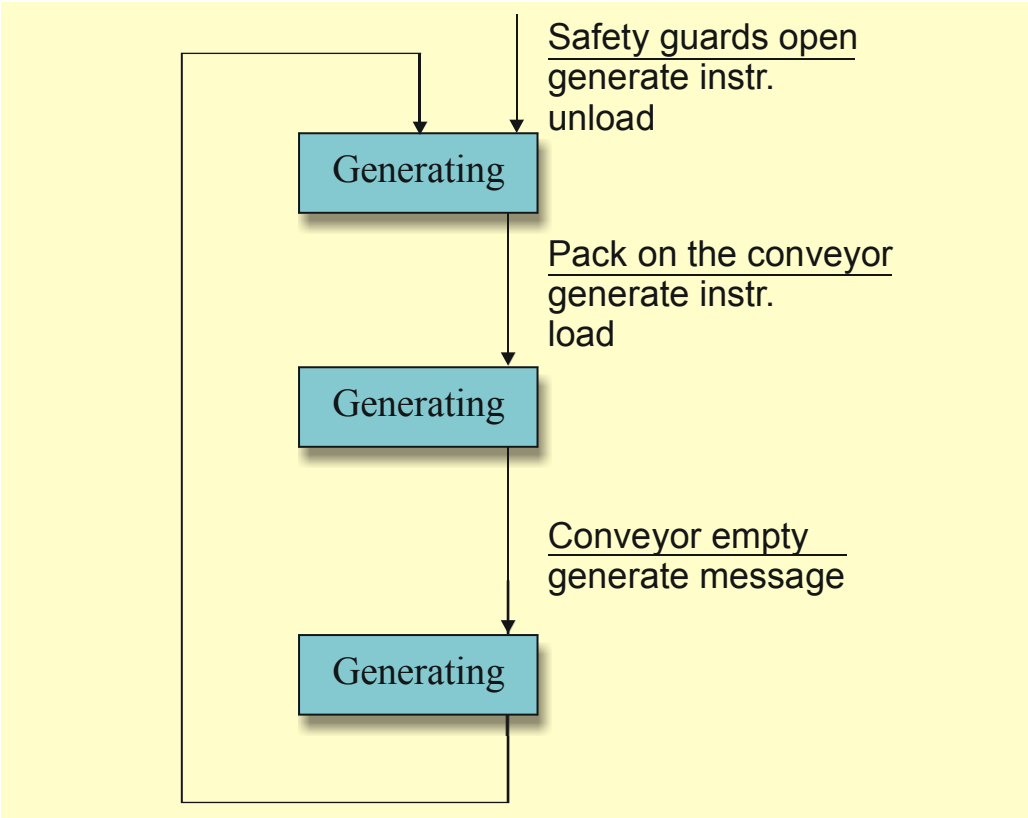

Figure 15

Download free eBooks at bookboon.com

4.2.3 Top level data/control flow diagram [10]

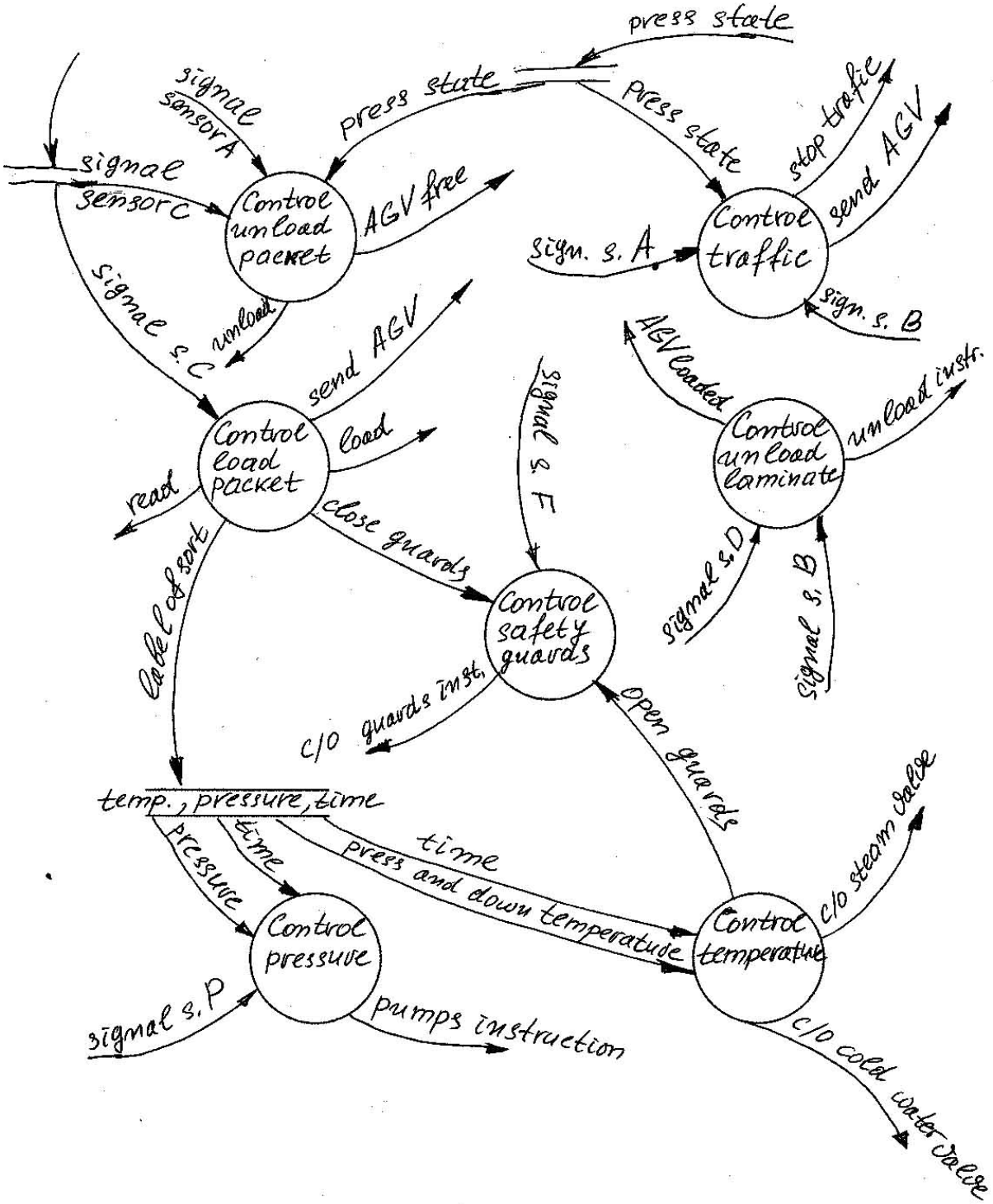

Figure 16

Download free eBooks at bookboon.com

References

1. H. Hubel, G.J. Colquhoun, A reference architecture for Engineering Data Control (EDC) in capital plant manufacture. *Computers in Industry, Volume 46, Issue 2, September 2001, Pages 149–165*.
2. Ali M. El-Nashar, Optimization of operating parameters of MSF plants through automatic setpoint control. *Desalination, Volume 116, Issue 1, 1 September 1998, Pages 89–107.*
3. A. Carotti, G. Lio, Experimental active control: bench tests on controller units. *Engineering Structures, Volume 13, Issue 3, July 1991, Pages 242–252*.
4. Hassan Gomaa, Software design methods for the design of large-scale real-time systems. *Journal of Systems and Software, Volume 25, Issue 2, May 1994, Pages 127–146*.
5. Michalis Glykas, George Valiris, Formal methods in object oriented business modelling. *Journal of Systems and* Software*, Volume 48, Issue 1, 1 August 1999, Pages 27–41*.
6. Sam C. Creason, John W. Hayes, Donald E. Smith Fourier transform faradaic admittance measurements: III. Comparison of measurement efficiency for various test signal waveforms. *Journal of Electroanalytical Chemistry, Volume 47, Issue 1, 25 September 1973, Pages 9–46*.
7. Hong Zhu Model-Based Analysis: The HASARD Method. Software *Design Methodology, 2005, Pages 299–334*.
8. Jeff Tian, Reliability Measurement, Analysis, and Improvement for Large Software Systems. *Advances in Computers, Volume 46, 1998, Pages 159-235*.
9. Jorge L. Romeu, A simulation approach for the analysis and forecast of software productivity. *Computers & Industrial* Engineering*, Volume 9, Issue 2, 1985, Pages 165–174*.
10. C. Reid Turner, Alfonso Fuggetta, Luigi Lavazza, Alexander L. Wolf, A conceptual basis for feature engineering. *Journal of Systems and Software, Volume 49, Issue 1, 15 December 1999, Pages 3–15*.

Download free eBooks at bookboon.com

5 Robot grip mechanism: control loop design considerations

5.1 Introduction

Given in this chapter is the structural diagram in Fig.1:

A = 15, B = 15, C = 85

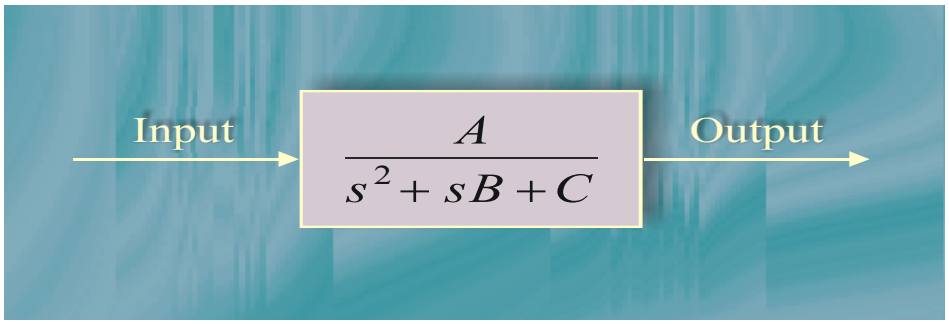

Figure 1

Download free eBooks at bookboon.com

Click on the ad to read more

The closed-loop system shall have the following quality indicators for the transition process:

Peak time – . . . . . 0.475 s
Percentage overshoot – 2.838%
Settling time –. . . . . 0.533 s
Output value – . . . . . 1.

Showing the results of simulating the open loop system and the closed loop control system has been done by employing CODAS (Matlab). What if the Settling time, TS is reduced to 0.4 seconds while the other parameters remain the same? What could you do about this? The problems this may cause and possible solutions have been described. What other factors have been considered in designing the control system?

5.2 Open loop system

If we consider a standard second-order system [1]:

(1) $$\frac{Y(s)}{X(s)} = \frac{k}{T^2 s^2 + 2\xi T s + 1},$$

where:

$$k = A/C = 15/85 = 0.1765;$$
$$T = \sqrt{1/C} = 0.1085,$$
$$\xi = B/2CT = 0.8132$$

$0 < \xi < 1$ This is therefore an under damped system [1]. Figure 2 shows the step response of the open loop system:

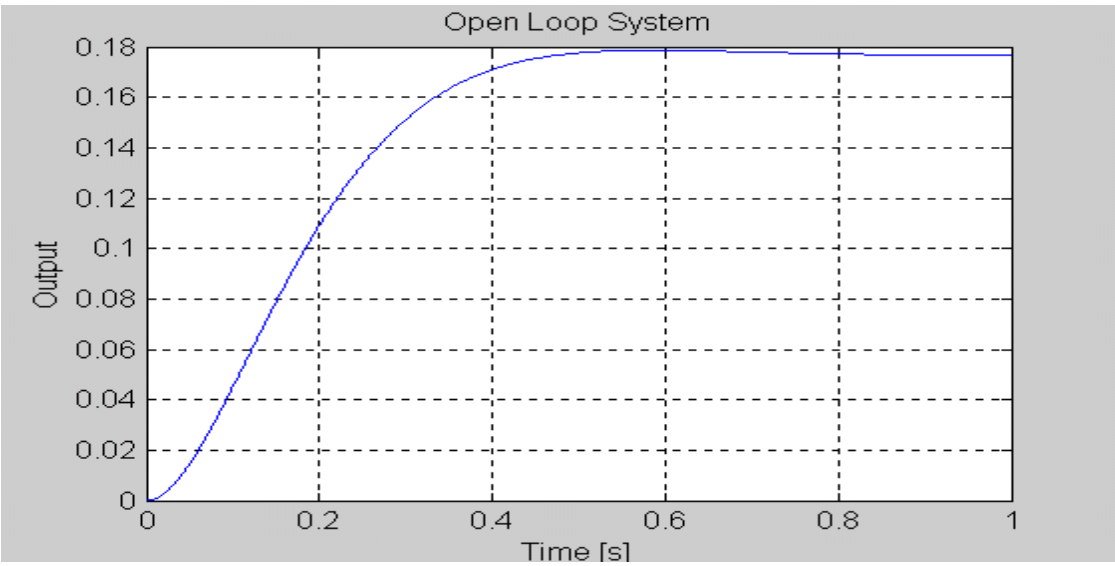

Figure 2

Download free eBooks at bookboon.com

5.3 Closed loop control system

If we close the system using a single feedback, as shown in Figure 3:

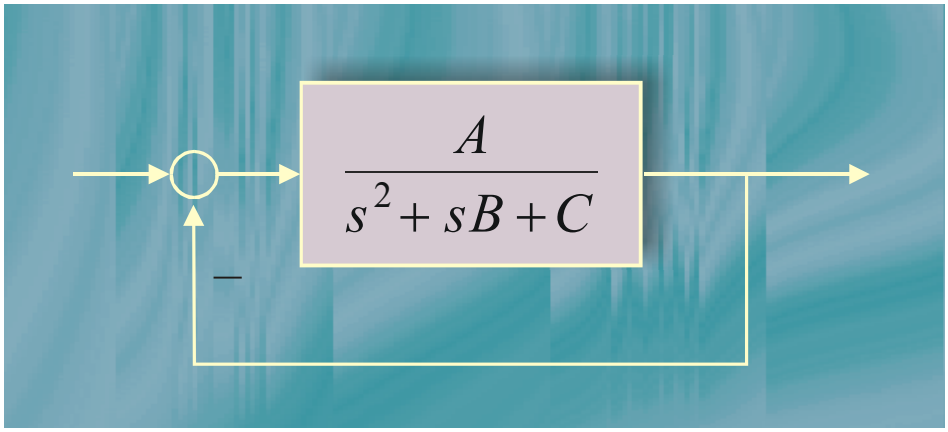

Figure 3

The transfer function is [2]:

$$W(s) = \frac{G(s)}{1 + G(s)} = \frac{A}{s^2 + Bs + C + A} = \frac{15}{s^2 + 15s + 100}.$$

In steady state the gain coefficient of the system is k = 15 / 100 = 0.15. In order to have a steady state Output value of 1 we will need to provide additional signal amplification, as in Figure 4.

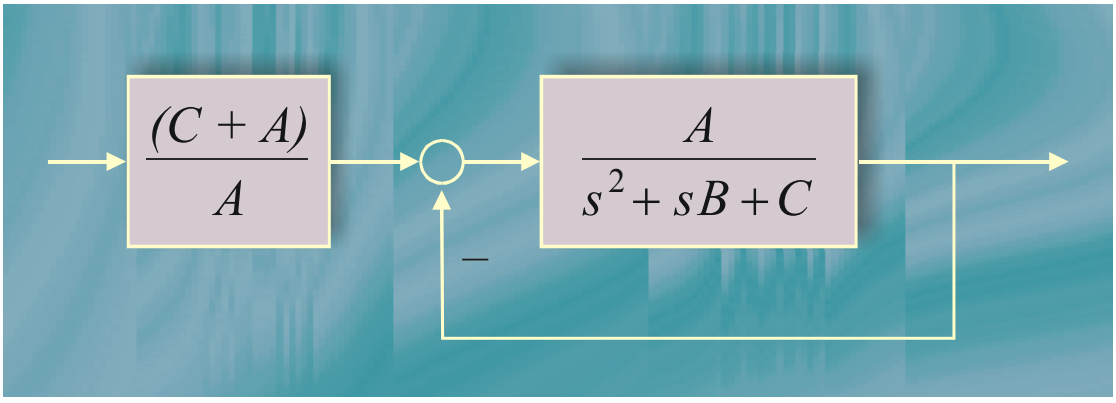

Figure 4

Download free eBooks at bookboon.com

Figure 5 shows the step response of the closed loop system [3]:

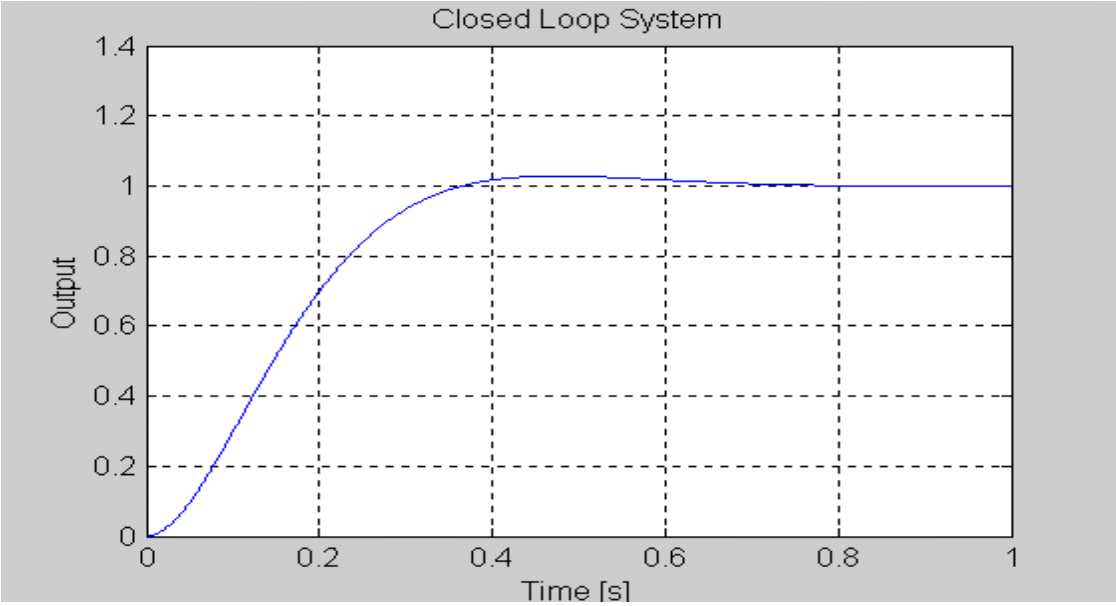

Figure 5

Getting ahead in your
management career

Our expertise in flexible and accessible education and your passion to succeed will enable you to get ahead.

A world-class research university, Leicester offers flexible, innovative courses because we understand that you've got other responsibilities. In fact, we're committed to making sure that everyone in our vibrant community gets the very best experience at Leicester, whether you're on campus or on the other side of the world.

Whether you choose to study one of our specialist Masters' courses, or our AMBA accredited MBA by full-time or distance learning, you will join a global network of similarly minded professionals and be supported all the way.

Get ahead, get in touch
www.le.ac.uk/management
+44 (0)116 252 5377
dladvisers@le.ac.uk

Distance Learning
School of Management
Postgraduate Programmes

University of Leicester

Download free eBooks at bookboon.com

Click on the ad to read more

The desired movement of the system (the parameters of the assignment) can be achieved adopting various synthesis techniques – root locus, frequency domain compensator design techniques and other methods but such techniques are essentially abstract by nature and too far from the physics of processes taking place in real systems [3].

For mechanical, hydraulic, pneumatic or electrical and mechanical actuator systems that the present assignment could be referred to it would be best to employ the method of inverse problems of control system dynamics [4].

The algorithm synthesized employing the above method allows us to directly implement the parameters of the desired movement into the control formula – the reference model will be defined using the following second-order differential equation [5]:

$$\tau^2 \ddot{y}^* + 2\xi\tau\dot{y}^* + y^* = y^0.$$

The accuracy of reproduction of the reference movement shall be determined by the value of the k coefficient in the control signal formation formula [5]:

$$x(t) = \frac{k}{\tau^2}\int(y^0 - y)dt - 2k\frac{\xi}{\tau}y - k\dot{y}. \tag{2}$$

The system (1) can be presented in the Koshi form [6]:

$$\begin{aligned} \frac{dy_1}{dt} &= y2; \\ \frac{dy_2}{dt} &= -By_2 - Cy_1 + Ax. \end{aligned} \tag{3}$$

The simulation model using Simulink is shown in Figure 6

Download free eBooks at bookboon.com

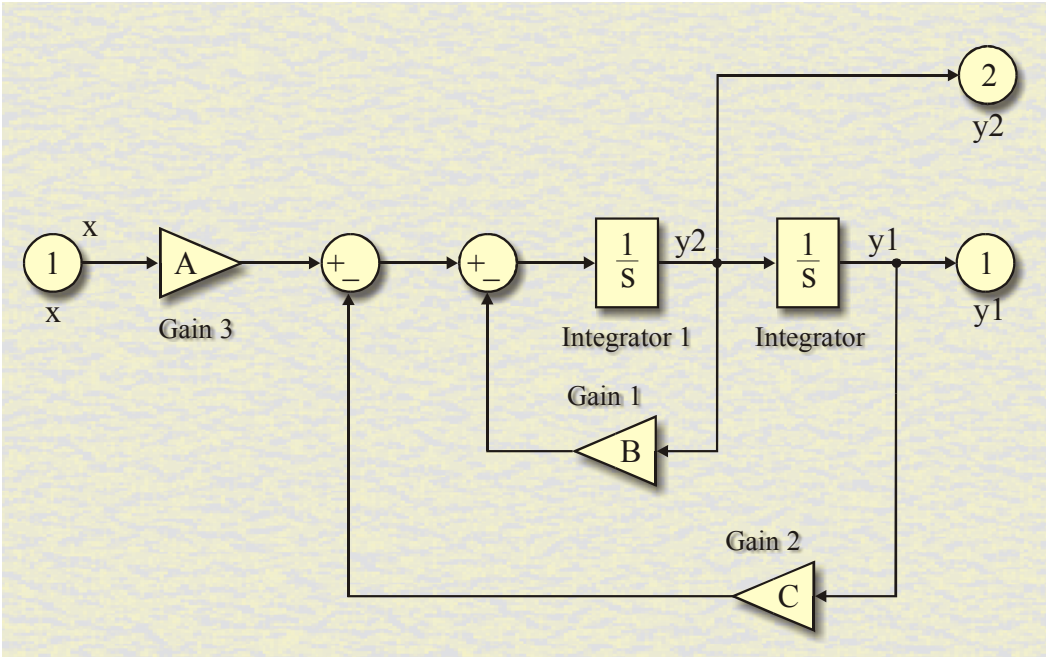

Figure 6

The object simulation model as controlled by (3) above is shown in Figure 7.

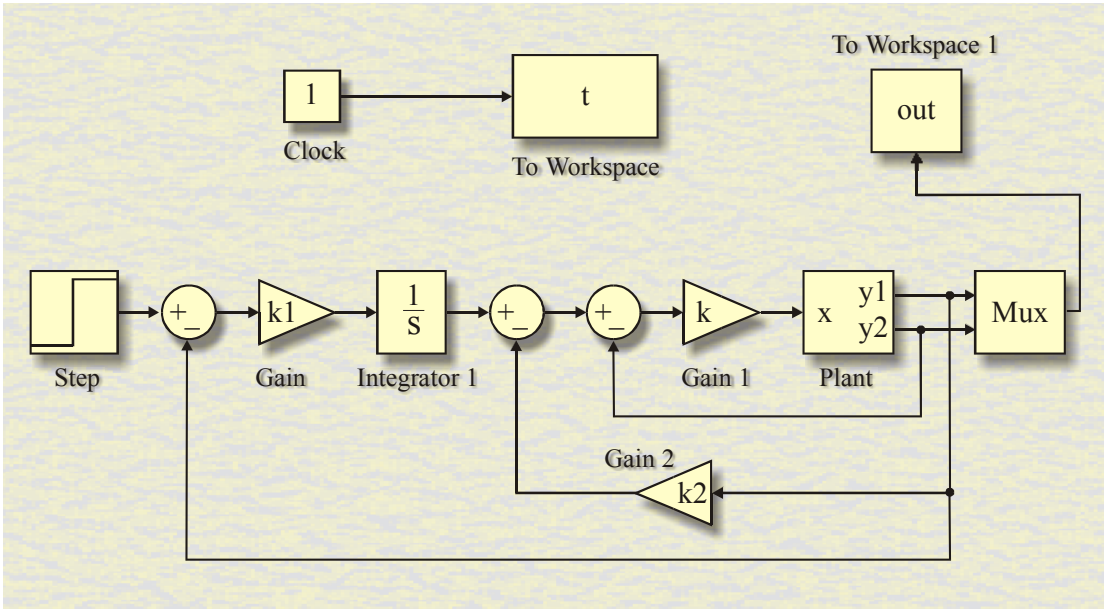

Figure 7

Where:

$$k_1 = \frac{1}{\tau^2}; k_2 = 2\frac{\xi}{\tau}.$$

Download free eBooks at bookboon.com

If we maintain percentage overshoot values constant, ξ respectively and change the settling time to 0.4 s we will get the results shown in Figure 8 for coefficient k values of k = 0.5, 1, 2, 10, 20.

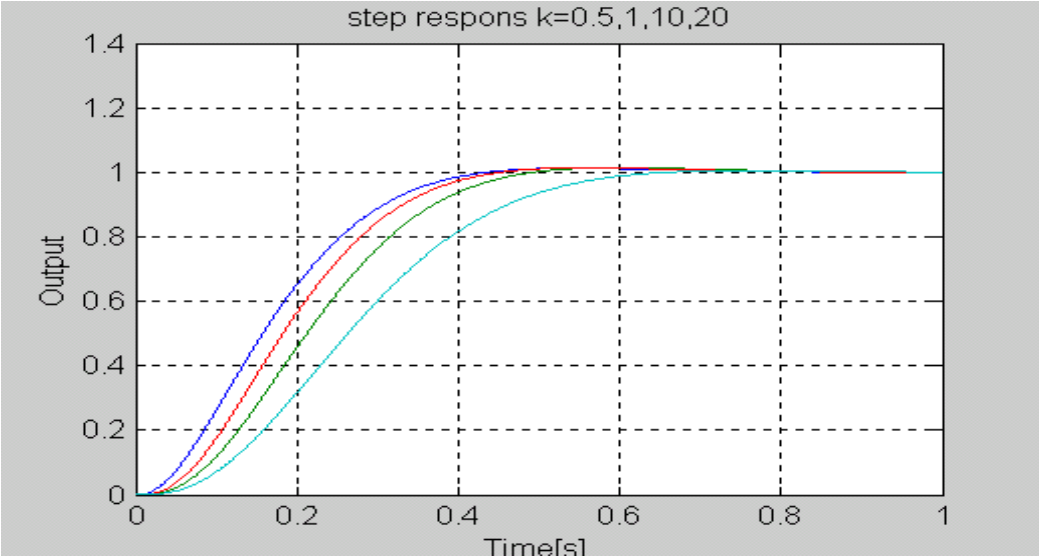

Figure 8

It can be seen from Figure 8 that when coefficient k = 20 the reference movement defined by equation (2) is coincident with system Output y.

With us you can shape the future. Every single day.

For more information go to:
www.eon-career.com

Your energy shapes the future.

e·on

Download free eBooks at bookboon.com

Click on the ad to read more

Since system (1) is a linear type of system we can achieve the desired quality of the transfer process for any value of the quality indicators (settling time, overshoot, etc.) – the computer would take anything. However, this is not true when real systems have to be designed as we will then be limited by the energy capabilities of the physical processes [6].

5.4 Other control loop design considerations

Real physical systems are non-linear and unsteady by nature. Models of the (1) type are a result of a number of assumptions and linearization of non-linear models. Despite of the fact that control loops are usually synthesised based on linear models, it is necessary to check the results using computer simulation on non-linear models or physical models [7].

The control (3) works successfully even when included in some non-linear systems. When selecting the suitable reference movement (2) we have to consider the energy capabilities of drive power units, which are usually limited.

For example, when the drive power source is a DC motor, then $\tau \geq \tau m$ p, where τm – is the electro-mechanical constant of the motor. When this condition is not met we cannot expect to meet the step response quality criterion. It is interesting to find out how will an eventual essential change in object parameters affect the step response quality [7].

For example, if we increased or reduces the values of A, B and C by 20%.

A=18, B=18, C=102,
A=12, B=12, C=68.

Simulations are performed using a gain coefficient of k = 20. The results are shown in Figure 9.

Download free eBooks at bookboon.com

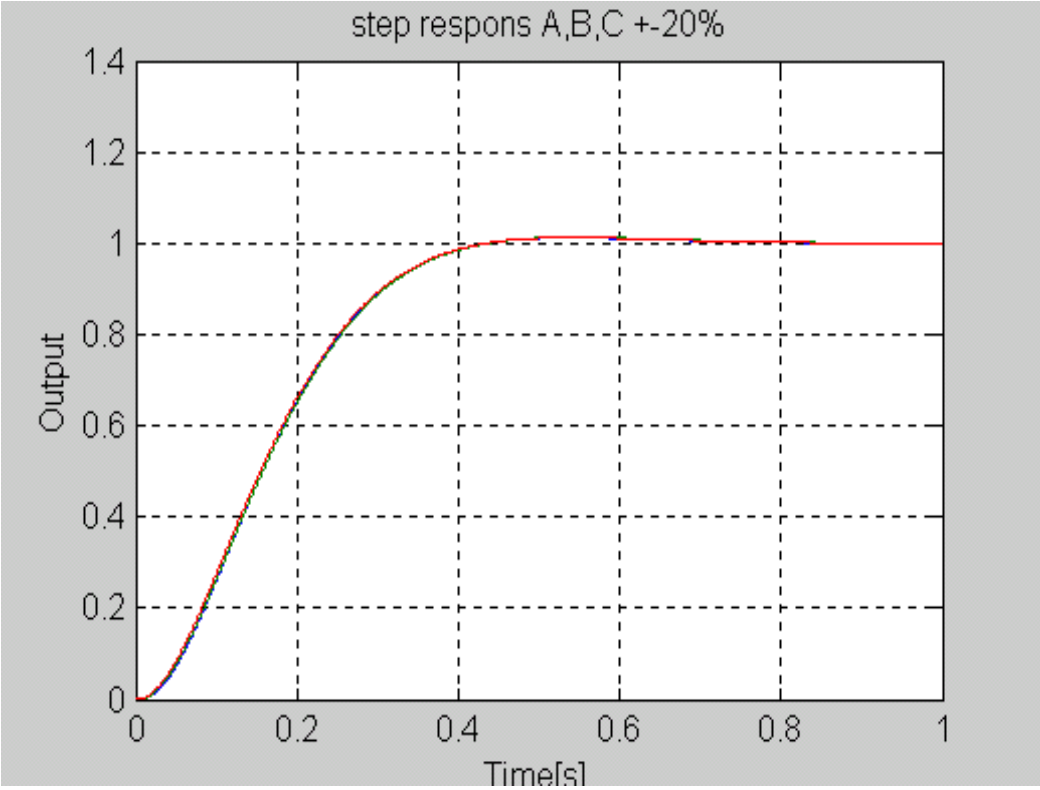

Figure 9

We can conclude from here that there are practically no differences in the step response characteristics. This means that the loop thus synthesised shows adaptive properties when it comes to varying object parameters [8].

5.5 Conlcusion

Other methods of control loop synthesis are also possible. However, the results would in one way or another be similar to the ones obtained above since all synthesis methods in one form or another are derived from the inverse problems of control system dynamics [9].

References

1. Håkan Hjalmarsson, Michel Gevers, Franky de Bruyne, For model-based control design, closed-loop identification gives better performance. *Automatica, Volume 32, Issue 12, December 1996, Pages 1659–1673.*
2. Yucai Zhu, Paul P.J. van den Bosch, Optimal closed-loop identification test design for internal model control. *Automatica, Volume 36, Issue 8, August 2000, Pages 1237–1241.*
3. Håkan Hjalmarsson, From experiment design to closed-loop control. *Automatica, Volume 41, Issue 3, March 2005, Pages 393–438.*

Download free eBooks at bookboon.com

4. F. Michiel Meeuse, Rob L. Tousain, Closed-loop controllability analysis of process designs: Application to distillation column design. *Computers & Chemical Engineering, Volume 26, Issues 4–5, 15 May 2002, Pages 641–647*.
5. Jin-Hyung Kim, Neil A. Duffie, Design and Analysis of Closed-Loop Capacity Control for a Multi-Workstation Production System. *CIRP Annals – Manufacturing Technology, Volume 54, Issue 1, 2005, Pages 455–458*.
6. G.W. Barton, W.K. Chan, J.D. Perkins, Interaction between process design and process control: the role of open-loop indicators. *Journal of Process* Control*, Volume 1, Issue 3, May 1991, Pages 161–170*.
7. P. Atkinson, V.S. Dalvi Computer-aided design of parallel compensated closed-loop control systems. *Computer-Aided* Design*, Volume 1, Issue 4, Summer 1969, Pages 3–12*.
8. Ching-Wei Koung, John F. Macgregor, Identification for robust multivariable control: The design of experiments. *Automatica, Volume 30, Issue 10, October 1994, Pages 1541–1554*.
9. Tadashi Ishihara, Discrete-time control systems design via loop transfer recovery. Control *and Dynamic Systems, Volume 70, 1995, Pages 163–198*.