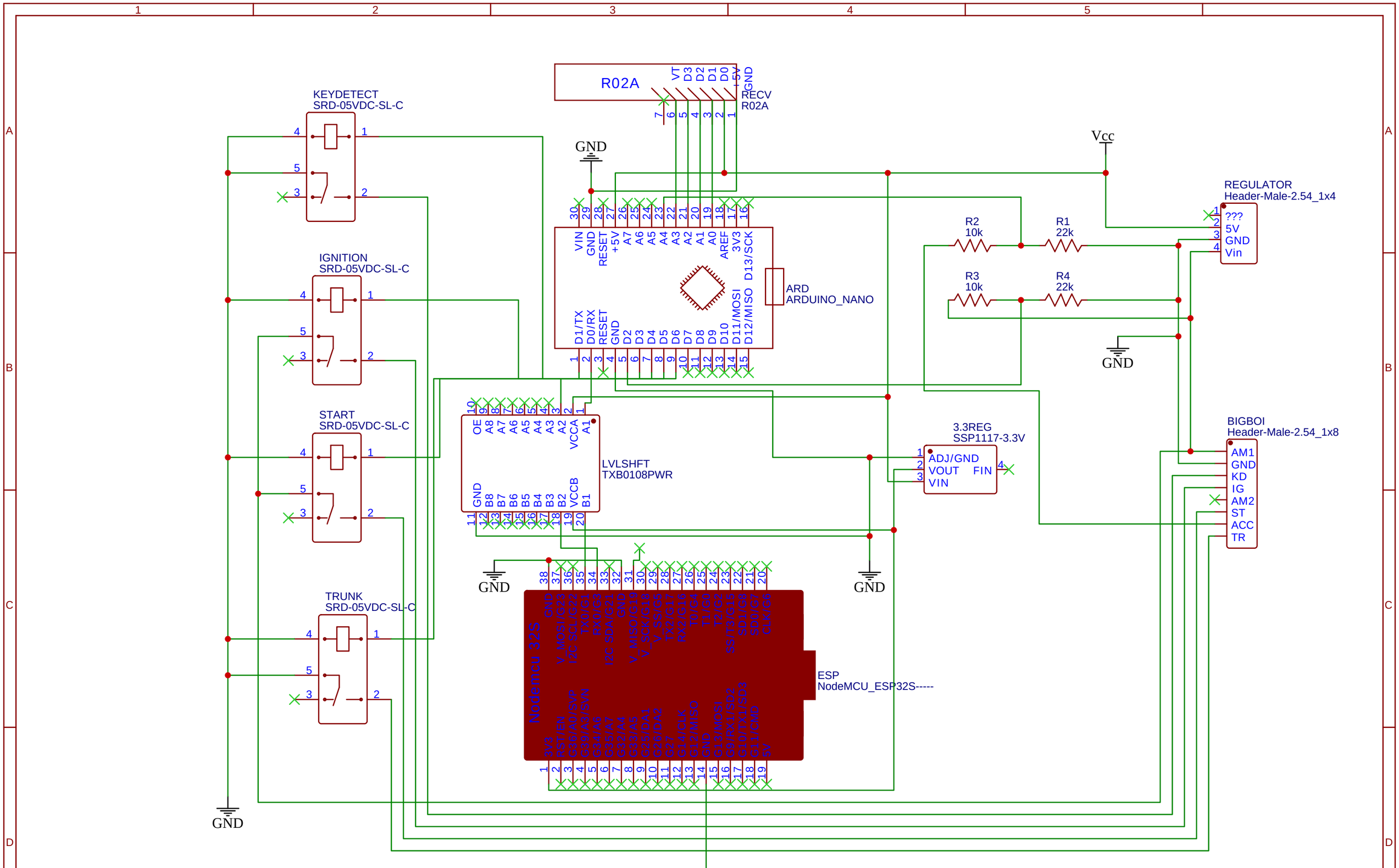

TITLE: OBAMIUM

REV: 2.0

Company: Noorquacker Ind.

Sheet: 1/1

Date: 2019-12-19

Drawn By: noorquackerindustries