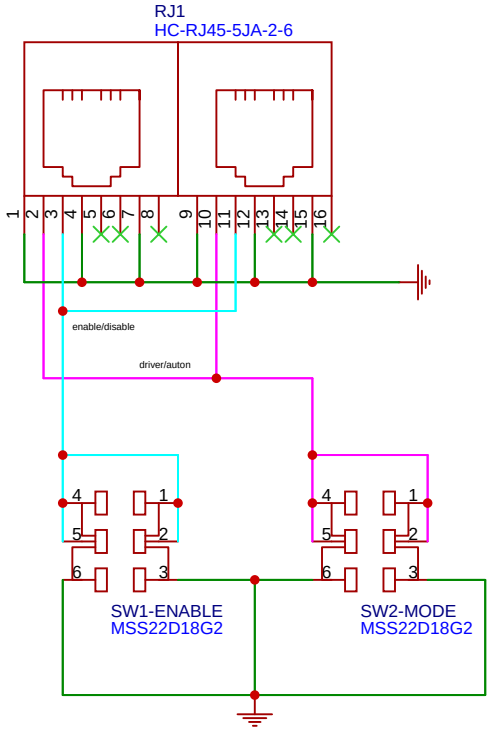

*note

sw1 open = enabled
sw1 closed = disabled

sw2 open = driver
sw2 closed = auton

TITLE: VEX_Competition_Switch_Duo		REV: 1.0
EasyEDA	Company: Your Company	Sheet: 1/1
	Date: 2025-08-22 Drawn By: noozabooz	