VERSION HISTORY

Index:

P01 VERSION HISTORY
P02 BLOCK DIAGRAM
P03 POWER TREE
P04 GPIO ASSIGNMENT
P05 PMIC
P06 SOC-SYS
P07 SOC-GPIO
P08 LPDDR3
P09 FLASH
P10 AUDIO
P11 USB/T-CARD
P12 CAMREA
P13 LCM
P14 CTP
P15 KEY/DEBUG
P16 WIFI+BT
P17 SENSOR

Revision	Description	Date	Drawn	Checked	Approved
Ver 1.0	Release version	2020-03-12			
Ver 1.1	1、P03 page , Instructions for modifying Power Tree. 2、Update A100 symbol,and modify A100 description as A100_A133. 3、P10 page, Modify the group value of power amplifier feedback resistors R22 and R24 to 100K. 4、P13 page ,Modify R53 resistance value to 1.8K. 5、Delete AC101 design,and delet R97/R108. 6、Delete the description of the camera module about the I2C design。	2020-06-28			

KICKPI 深圳市橙视科技发展有限公司		Document Title A133	
Page Title VERSION HISTORY		PCB NO. K5C_V1.0	
Page Size A3	Sch Designer TIM	Pcb Designer TIM	Project Stage V10
Date: Wednesday, April 09, 2025		Sheet 1 of 21	

BLOCK

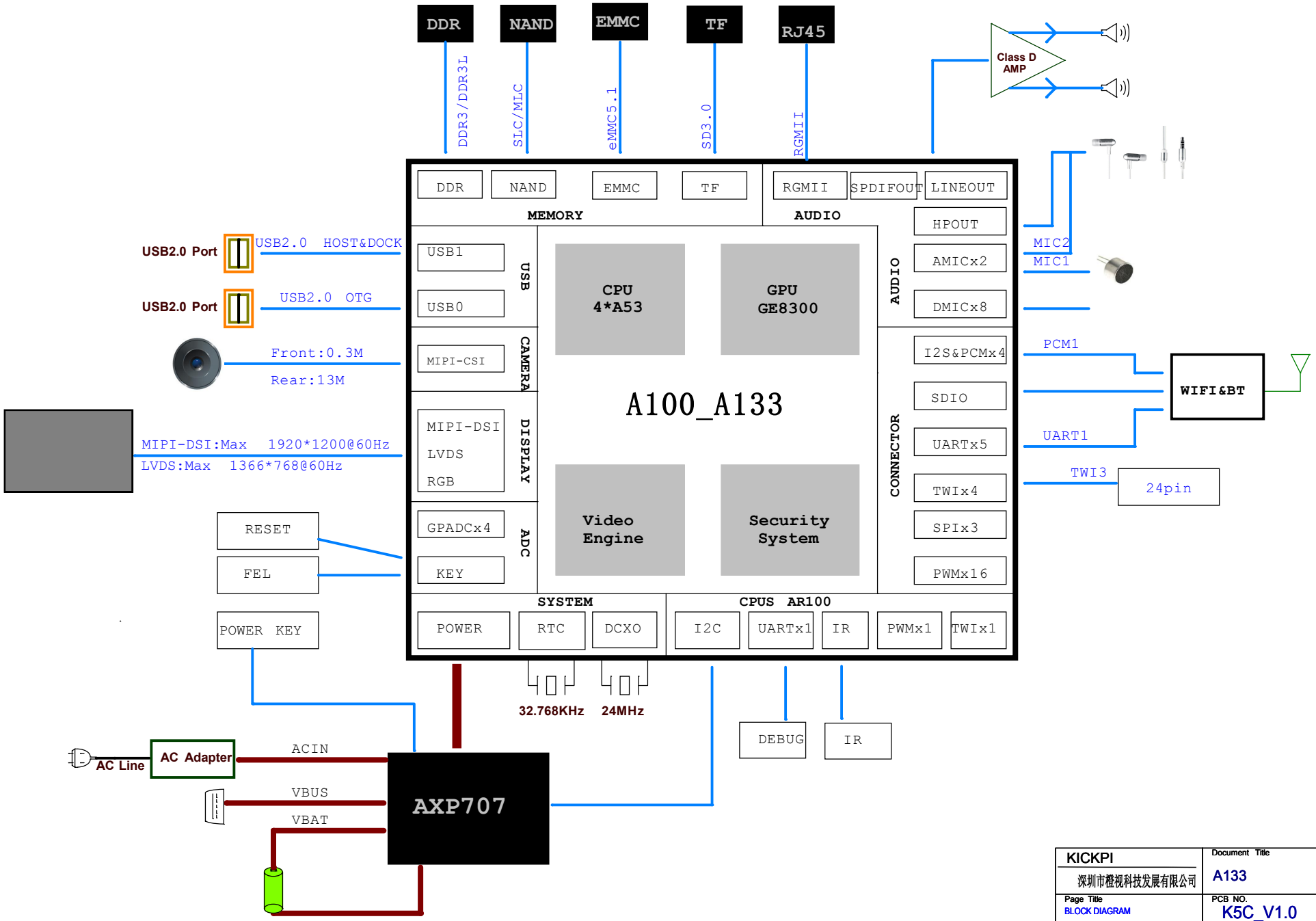

KICKPI 深圳市橙视科技发展有限公司		Document Title A133	
Page Title BLOCK DIAGRAM		PCB NO. K5C_V1.0	
Page Size A3	Sch Designer TIM	Pcb Designer TIM	Project Stage V10
Date: Wednesday, April 09, 2025		Sheet 2 of 21	

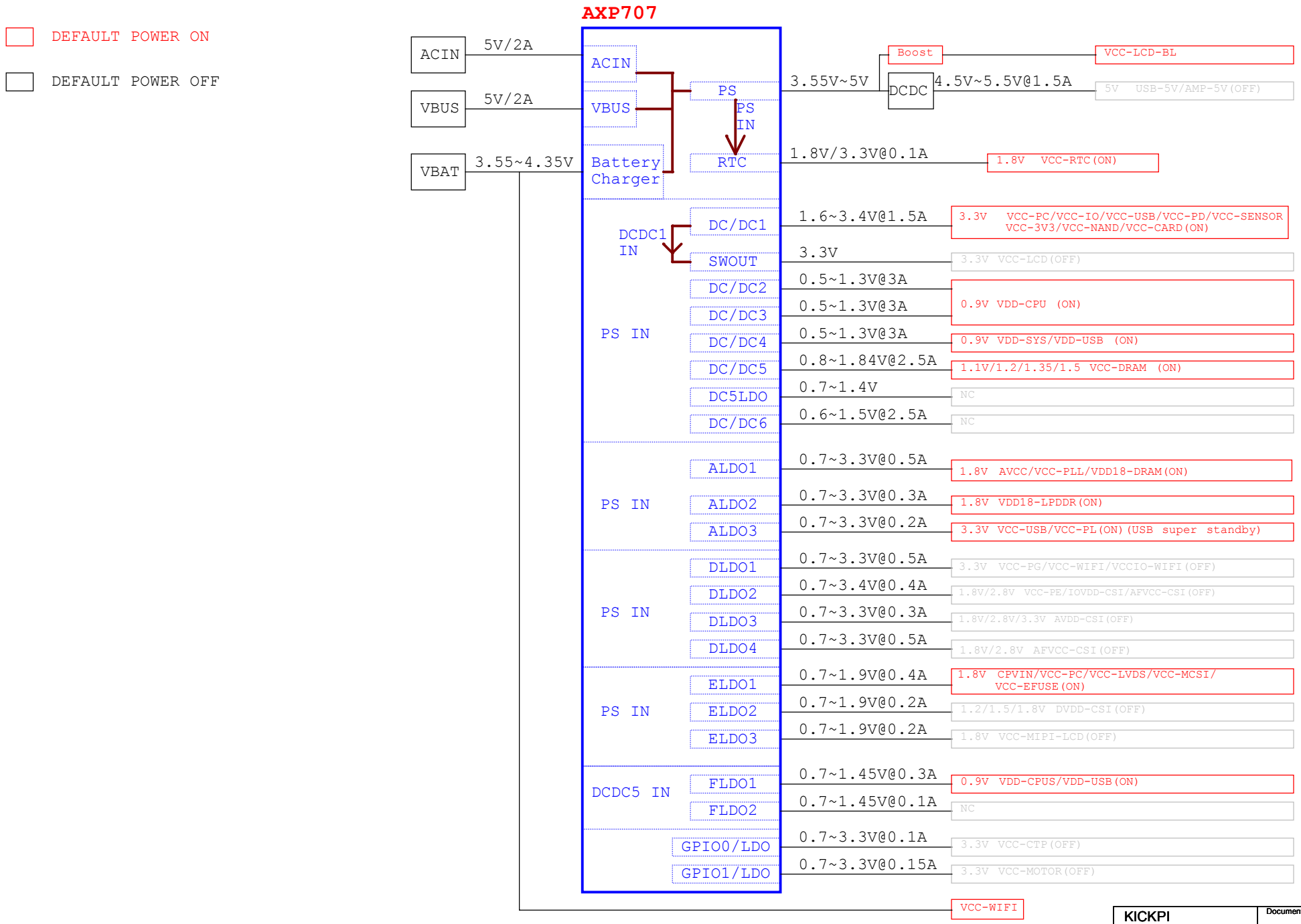

KICKPI 深圳市橙视科技发展有限公司		Document Title A133	
Page Title POWER TREE		PCB NO. K5C_V1.0	
Page Size A3	Sch Designer TIM	Pcb Designer TIM	Project Stage V10
Date: Wednesday, April 09, 2025		Sheet 3 of 21	

GPIO ASSIGNMENT

PIN	Define	CFG	Function
PB0	CPUX_TMS	4	DEBUG
PB1	CPUX_TCK	4	
PB2	CPUX_TDO	4	
PB3	CPUX_TDI	4	
PB4		3	GPIO
PB5		3	
PB6		3	
PB7		3	
PB8	LCD-BL-EN	3	
PB9	CPUX_TX	2	DEBUG
PB10	CPUX_RX	2	

PIN	Define	CFG	Function
PE0	MCSI_MCLK	2	CSI
PE1	MCSI_SCK	2	
PE2	MCSI_SDA	2	
PE3			
PE4			
PE5			
PE6	MCSIB_STBY_F	1	
PE7	MCSIB_RST_F	1	
PE8	MCSIA_STBY_R	1	
PE9	MCSIA_RST_R	1	

PIN	Define	CFG	Function
PH0	TWI0_SCK	2	TWI
PH1	TWI0_SDA	2	
PH2	TWI1_SCK	2	
PH3	TWI1_SDA	2	
PH4	PS-EINT	1	GPIO
PH5			
PH6	PA_SHDN	0	
PH7			
PH8	USB0_ID_SOC	0	
PH9	CTP_INT	0	
PH10	CTP_RST	1	
PH11	GS-INT	0	
PH12			
PH13			
PH14			
PH15			
PH16			
PH17			
PH18			
PH19			

PIN	Define	CFG	Function
PC0	NAND_WE/SDC2_DS	2/3	NAND/eMMC
PC1	NAND_ALE/SDC2_RST	2/3	
PC2	NAND_CLE	2	
PC3	NAND_CE1	2	
PC4	NAND_CE0	2	
PC5	NAND_RE/SDC2_CLK	2/3	
PC6	NAND_RB0/SDC2_CMD	2/3	
PC7	NAND_RB1	2	
PC8	NAND_DQ7/SDC2_D3	2/3	
PC9	NAND_DQ6/SDC2_D4	2/3	
PC10	NAND_DQ5/SDC2_D0	2/3	
PC11	NAND_DQ4/SDC2_D5	2/3	
PC12	NAND_DQS	2	
PC13	NAND_DQ3/SDC2_D1	2/3	
PC14	NAND_DQ2/SDC2_D6	2/3	
PC15	NAND_DQ1/SDC2_D2	2/3	
PC16	NAND_DQ0/SDC2_D7	2/3	

PIN	Define	CFG	Function
PF0	SDC0_D1	2	CARD
PF1	SDC0_D0	2	
PF2	SDC0_CLK	2	
PF3	SDC0_CMD	2	
PF4	SDC0_D3	2	
PF5	SDC0_D2	2	
PF6	SDC0_DET	0	

PIN	Define	CFG	Function
PL0	PMU_SCK	2	CPUS
PL1	PMU_SDA	2	
PL2	BT_RST_N	1	
PL3	BT_WAKE_AP	0	
PL4	AP_WAKE_BT	1	
PL5	WL_PMU_EN	1	
PL6	WL_WAKE_AP	0	
PL7	CPUS-TDI	2	
PL8	USB1-DRVVBUS	1	
PL9	EINT-HAL	0	
PL10	KD-EINT	0	
PL11	LED-EN	1	

PIN	Define	CFG	Function
PD0	LCD_D2	2	LCD
PD1	LCD_D3	2	
PD2	LCD_D4	2	
PD3	LCD_D5	2	
PD4	LCD_D6	2	
PD5	LCD_D7	2	
PD6	LCD_D10	2	
PD7	LCD_D11	2	
PD8	LCD_D12	2	
PD9	LCD_D13	2	
PD10			
PD11			
PD12			
PD13			
PD14			
PD15			
PD16			
PD17			
PD18			
PD19			
PD20			
PD21			
PD22	LCD_RST	1	
PD23	LCD_PWM	3	

PIN	Define	CFG	Function
PG0	WL_SDIO_CLK	2	WIFI/BT
PG1	WL_SDIO_CMD	2	
PG2	WL_SDIO_D0	2	
PG3	WL_SDIO_D1	2	
PG4	WL_SDIO_D2	2	
PG5	WL_SDIO_D3	2	
PG6	BT_UART_RX	2	
PG7	BT_UART_TX	2	
PG8	BT_UART_CTS	2	
PG9	BT_UART_RTS	2	
PG10	BT_PCM_CLK	3	
PG11	BT_PCM_SYNC	3	
PG12	BT_PCM_DIN	3	
PG13	BT_PCM_DOUT	3	

KICKPI 深圳市橙视科技发展有限公司		Document Title A133	
Page Title GPIO ASSIGNMENT		PCB NO. K5C_V1.0	
Page Size A3	Sch Designer TIM	Pcb Designer TIM	Project Stage V10
Date: Wednesday, April 09, 2025		Sheet 4 of 21	

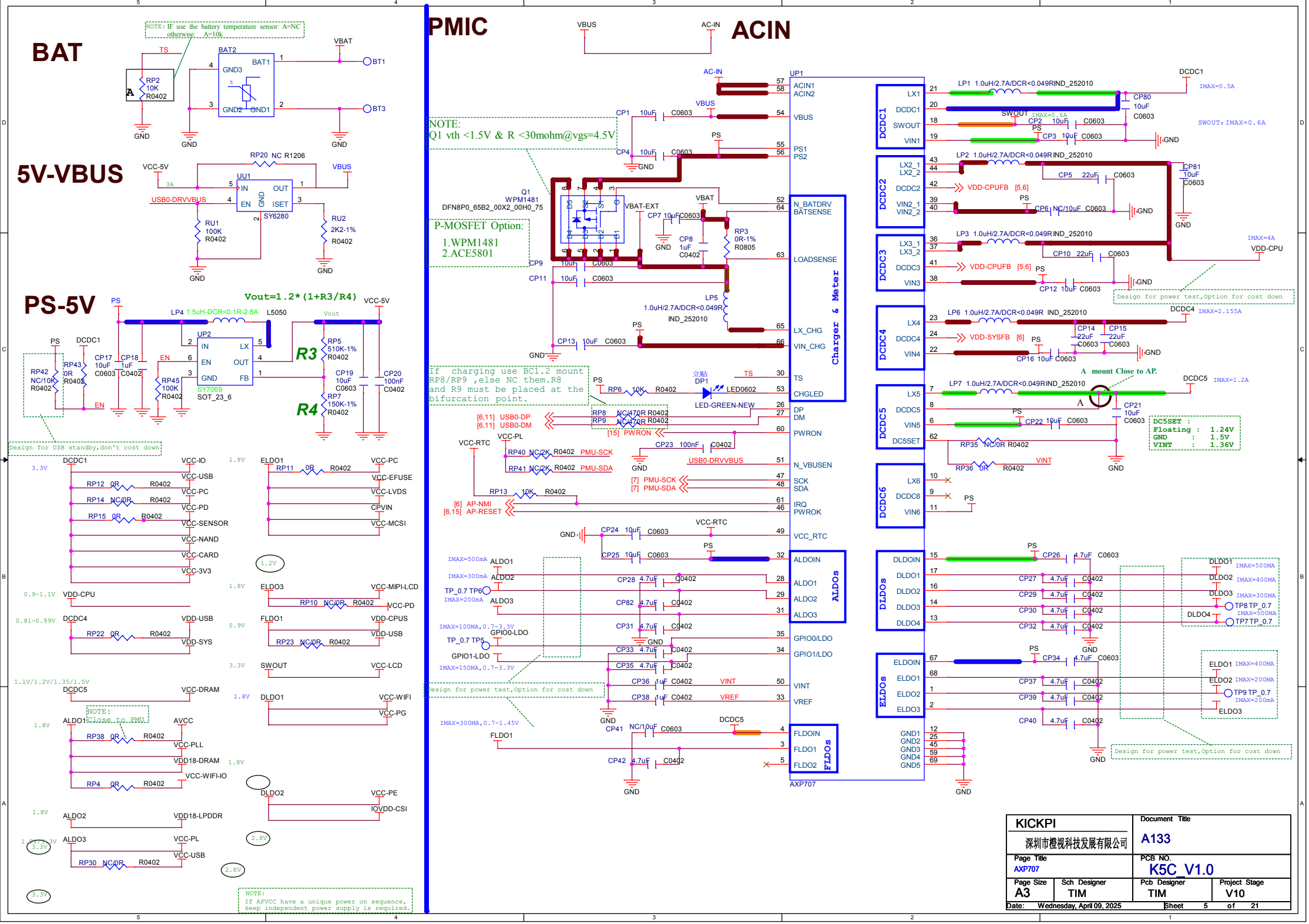
BAT
NOTE: IF use the battery temperature sensor: A=NC otherwise: A=10k
5V-VBUS
PS-5V
Vout=1.2*(1+R3/R4)
PMIC
ACIN
NOTE: Q1 vth <1.5V & R <30mohm@vgs=4.5V
P-MOSFET Option: 1.WPM1481 2.ACE5801
If charging use BC1.2 mount RP8/RP9 ,else NC them.R8 and R9 must be placed at the bifurcation point.
Design for power test,Option for cost down
Design for USB standby,don't cost down
A mount Close to AP.
DC5SET : Floating : 1.24V GND : 1.5V VINT : 1.36V
NOTE: If AFVCC have a unique power on sequence, keep independent power supply is required.
KICKPI
深圳市橙视科技发展有限公司
Document Title
A133
Page Title
AXP707
PCB NO.
K5C_V1.0
Page Size
A3
Sch Designer
TIM
Pcb Designer
TIM
Project Stage
V10
Date: Wednesday, April 09, 2025
Sheet 5 of 21

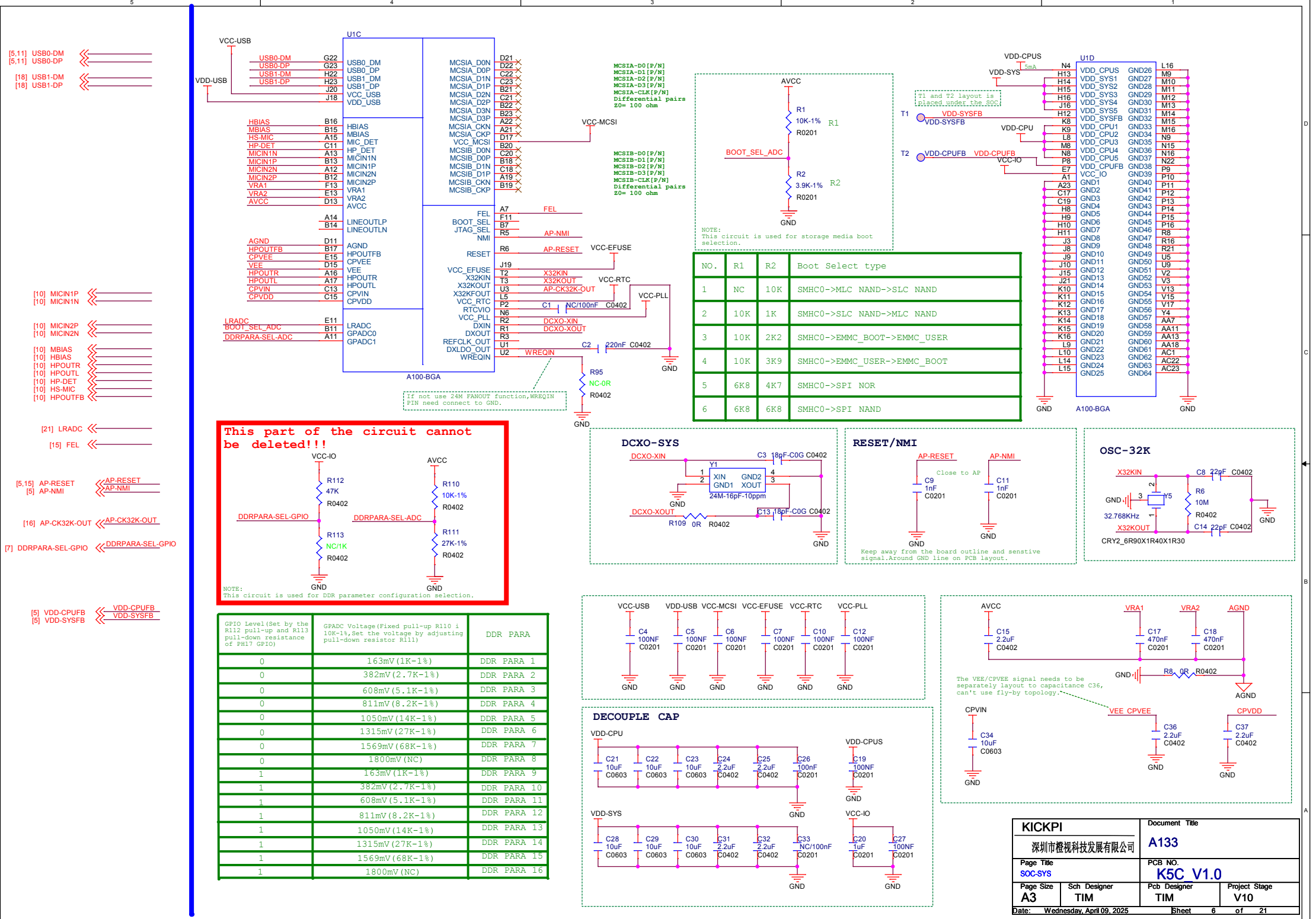

NO.	R1	R2	Boot Select type
1	NC	10K	SMHC0->MLC NAND->SLC NAND
2	10K	1K	SMHC0->SLC NAND->MLC NAND
3	10K	2K2	SMHC0->EMMC_BOOT->EMMC_USER
4	10K	3K9	SMHC0->EMMC_USER->EMMC_BOOT
5	6K8	4K7	SMHC0->SPI NOR
6	6K8	6K8	SMHC0->SPI NAND

GPIO Level(Set by the R112 pull-up and R113 pull-down resistance of PH17 GPIO)	GPADC Voltage(Fixed pull-up R110 i 10K-1%,Set the voltage by adjusting pull-down resistor R111)	DDR PARA
0	163mV(1K-1%)	DDR PARA 1
0	382mV(2.7K-1%)	DDR PARA 2
0	608mV(5.1K-1%)	DDR PARA 3
0	811mV(8.2K-1%)	DDR PARA 4
0	1050mV(14K-1%)	DDR PARA 5
0	1315mV(27K-1%)	DDR PARA 6
0	1569mV(68K-1%)	DDR PARA 7
0	1800mV(NC)	DDR PARA 8
1	163mV(1K-1%)	DDR PARA 9
1	382mV(2.7K-1%)	DDR PARA 10
1	608mV(5.1K-1%)	DDR PARA 11
1	811mV(8.2K-1%)	DDR PARA 12
1	1050mV(14K-1%)	DDR PARA 13
1	1315mV(27K-1%)	DDR PARA 14
1	1569mV(68K-1%)	DDR PARA 15
1	1800mV(NC)	DDR PARA 16

KICKPI 深圳市橙视科技发展有限公司		Document Title A133	
Page Title SOC-SYS		PCB NO. K5C_V1.0	
Page Size A3	Sch Designer TIM	Pcb Designer TIM	Project Stage V10
Date: Wednesday, April 09, 2025		Sheet 6 of 21	

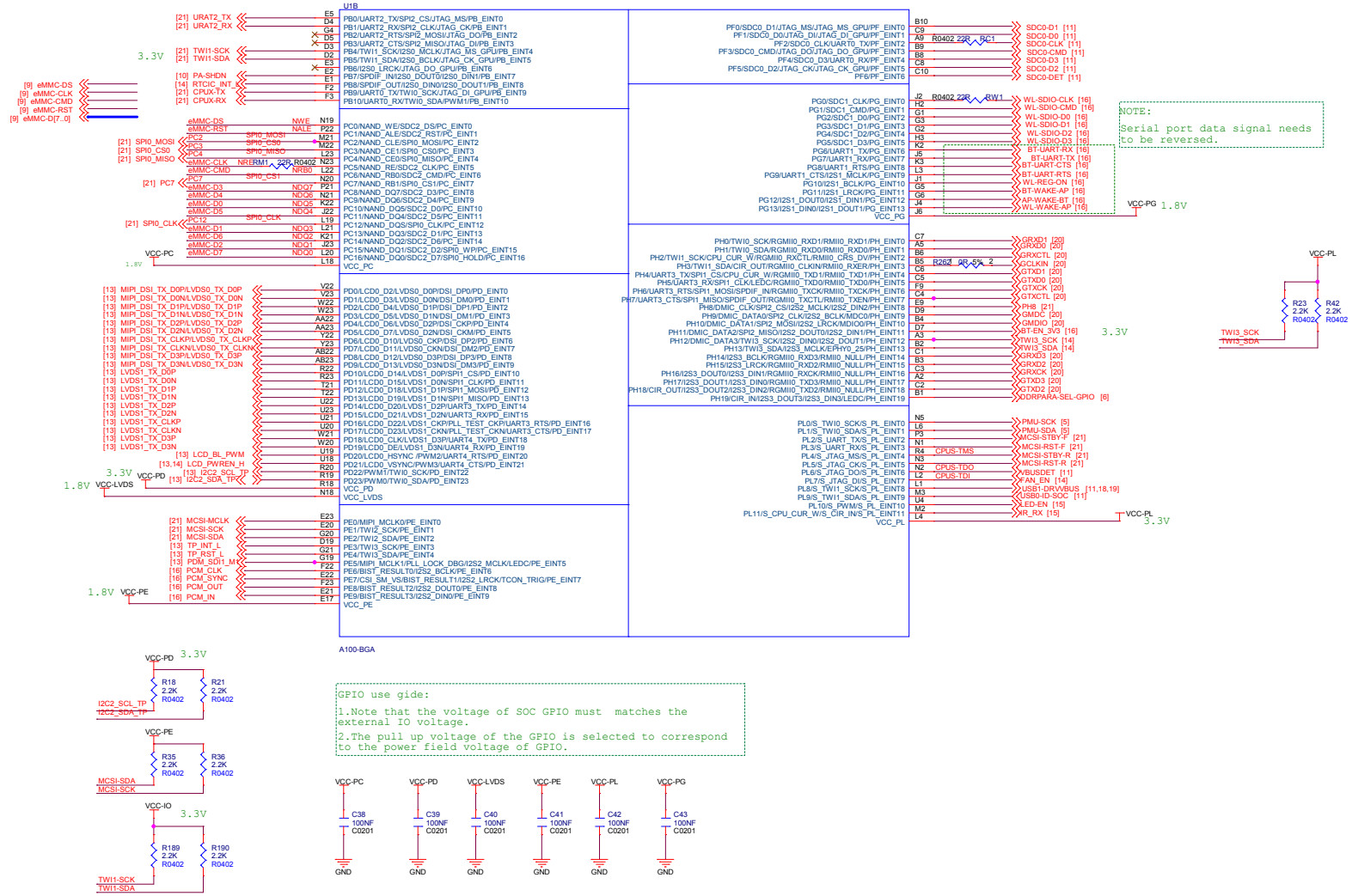

KICKPI 深圳市橙视科技发展有限公司		Document Title A133	
Page Title SOC-GPIO		PCB NO. K5C_V1.0	
Page Size A2	Sch Designer TIM	Pcb Designer TIM	Project Stage V10
Date: Wednesday, April 09, 2025		Sheet 7 of 21	

DDR3 16x2/8x4

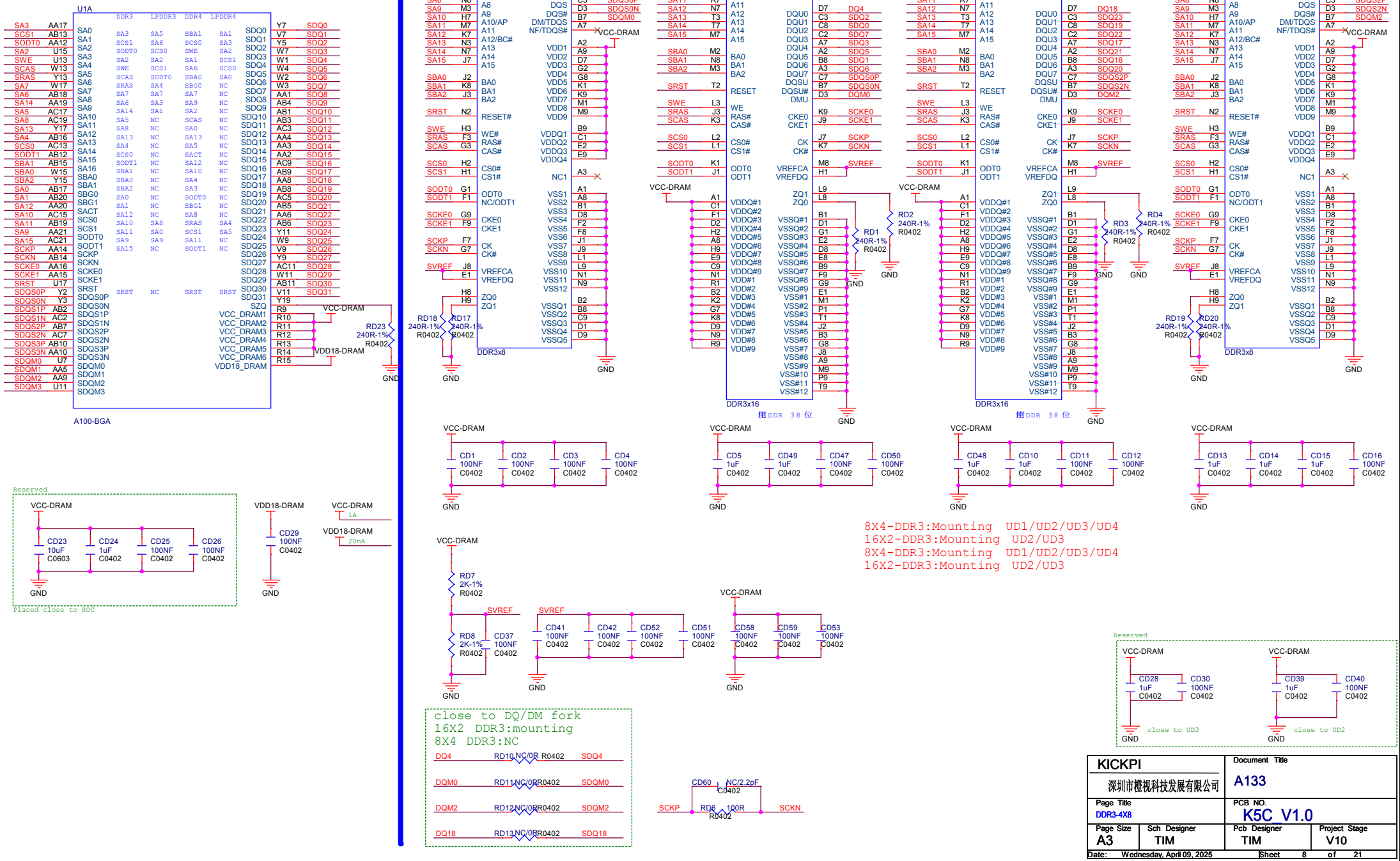

KICKPI 深圳市橙视科技发展有限公司		Document Title A133	
Page Title DDR3-4X8		PCB NO. K5C V1.0	
Page Size A3	Sch Designer TIM	Pcb Designer TIM	Project Stage V10
Date: Wednesday, April 09, 2025		Sheet 8 of 21	

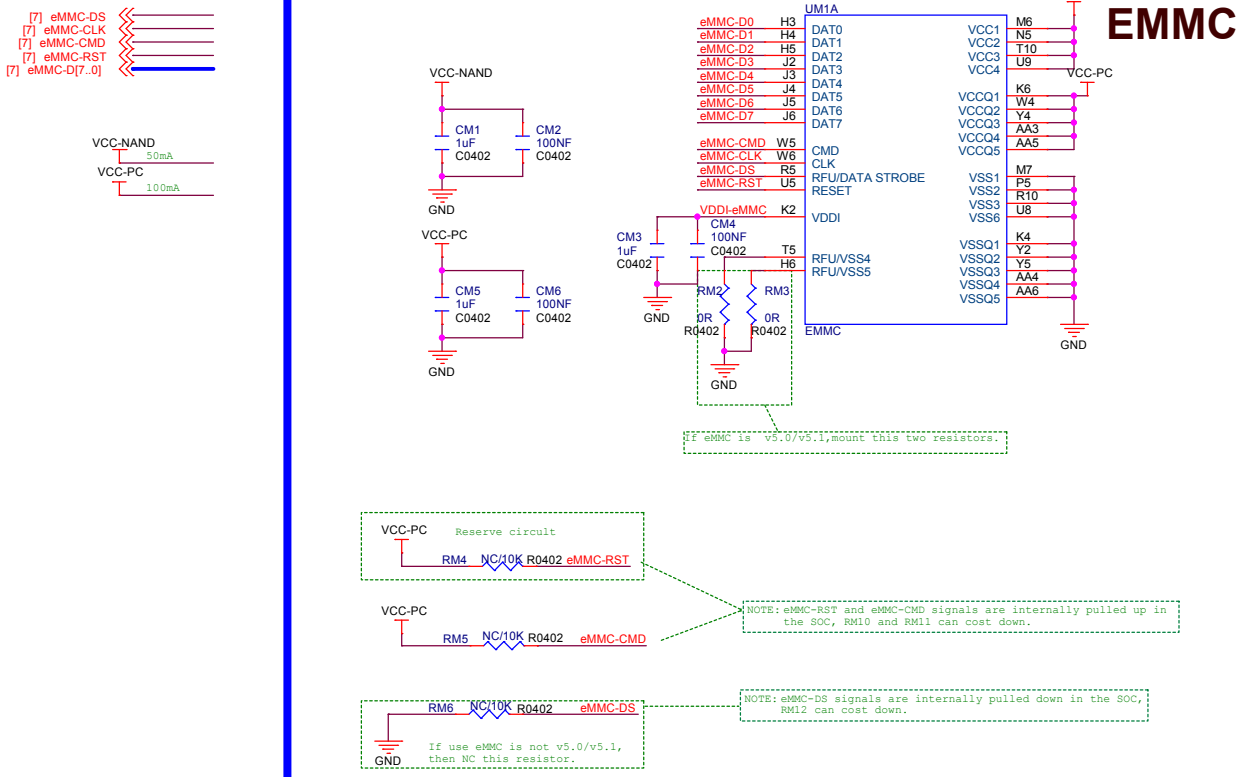

KICKPI 深圳市橙视科技发展有限公司		Document Title A133	
Page Title EMMC		PCB NO. K5C_V1.0	
Page Size A3	Sch Designer TIM	Pcb Designer TIM	Project Stage V10
Date: Wednesday, April 09, 2025		Sheet 9 of 21	

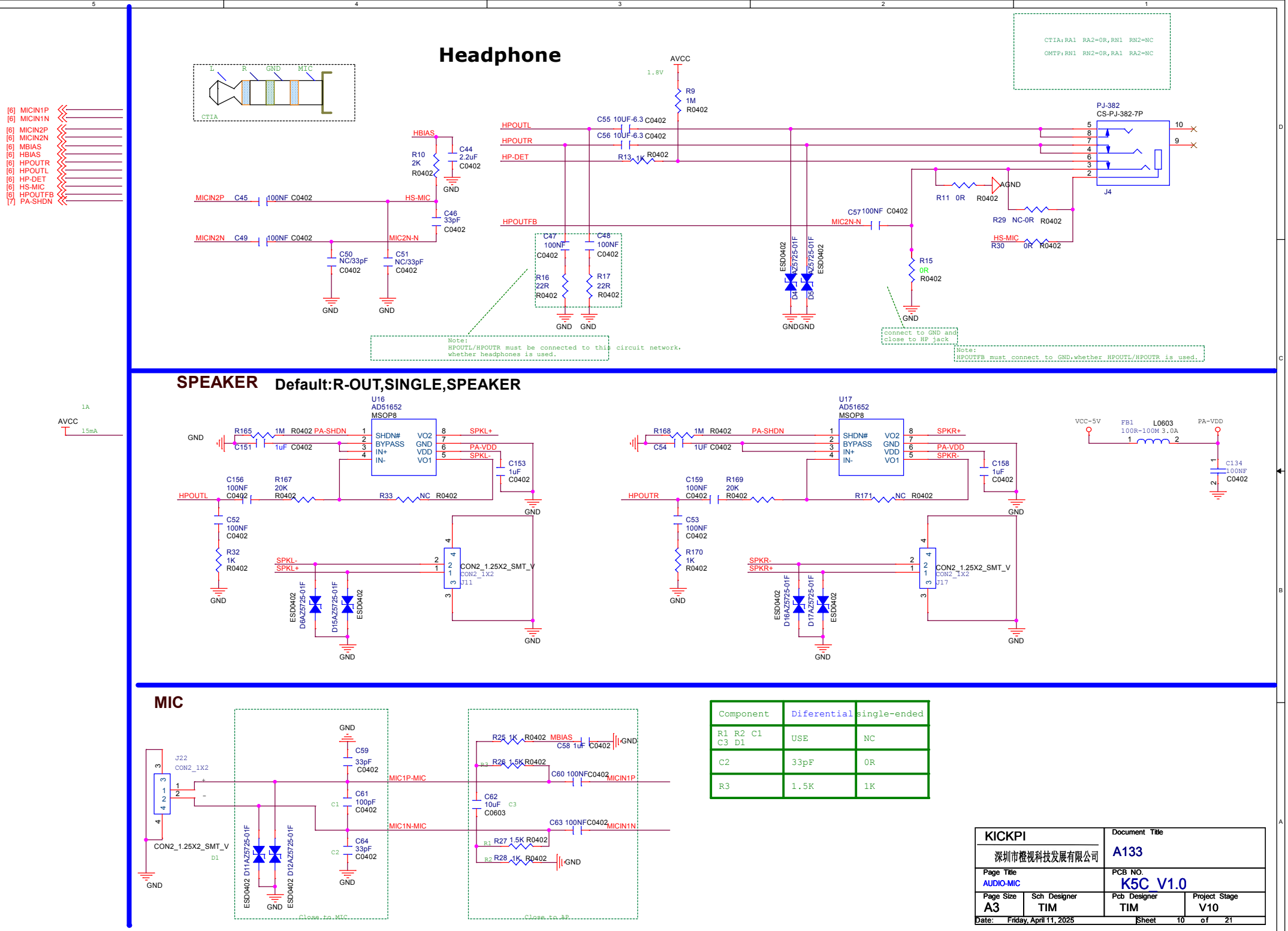

Component	Diferential	single-ended
R1 R2 C1 C3 D1	USE	NC
C2	33pF	0R
R3	1.5K	1K

KICKPI 深圳市橙视科技发展有限公司		Document Title A133	
Page Title AUDIO-MIC		PCB NO. K5C_V1.0	
Page Size A3	Sch Designer TIM	Pcb Designer TIM	Project Stage V10
Date: Friday, April 11, 2025		Sheet 10 of 21	

SD CARD

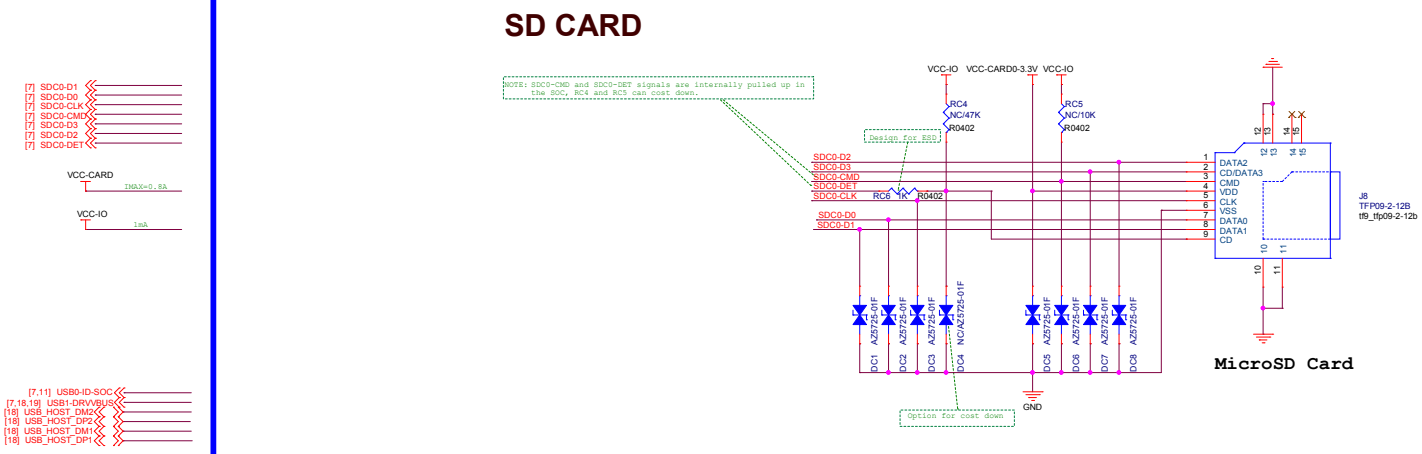

USB1

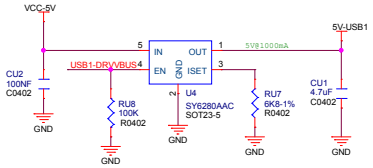

USB OTG0

USB2.0

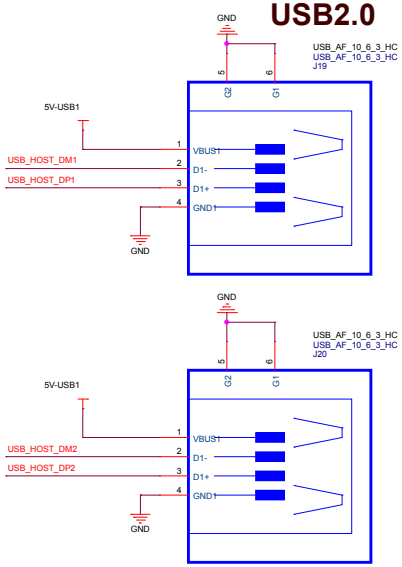

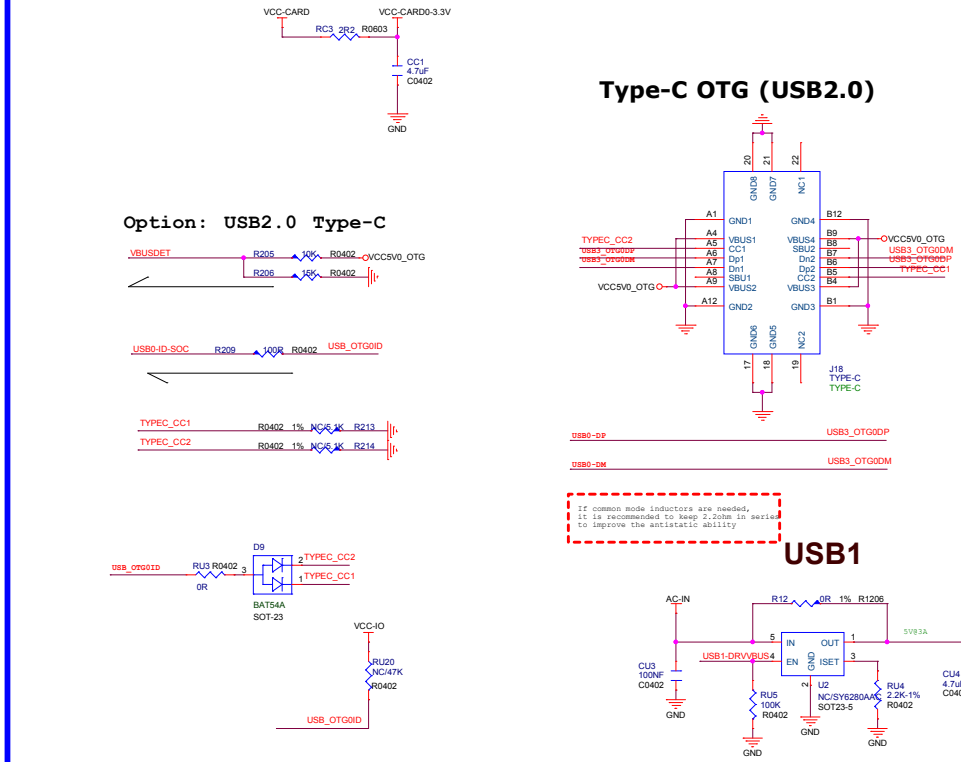

KICKPI 深圳市橙视科技发展有限公司		Document Title A133	
Page Title USB/CARD		PCB NO. K5C_V1.0	
Page Size A2	Sch Designer TIM	Pcb Designer TIM	Project Stage V10
Date: Friday, April 11, 2025		Sheet 11 of 21	

LVDS Panel

LVDS1_TX_D3N [7]
LVDS1_TX_D3P [7]
LVDS1_TX_CLKN [7]
LVDS1_TX_CLKP [7]
LVDS1_TX_D2N [7]
LVDS1_TX_D2P [7]
LVDS1_TX_D1N [7]
LVDS1_TX_D1P [7]
LVDS1_TX_D0N [7]
LVDS1_TX_D0P [7]

MIPI_DSI_TX_D3N/LVDS0_TX_D3N [7]
MIPI_DSI_TX_D3P/LVDS0_TX_D3P [7]
MIPI_DSI_TX_CLKN/LVDS0_TX_CLKN [7]
MIPI_DSI_TX_CLKP/LVDS0_TX_CLKP [7]
MIPI_DSI_TX_D2N/LVDS0_TX_D2N [7]
MIPI_DSI_TX_D2P/LVDS0_TX_D2P [7]
MIPI_DSI_TX_D1N/LVDS0_TX_D1N [7]
MIPI_DSI_TX_D1P/LVDS0_TX_D1P [7]
MIPI_DSI_TX_D0N/LVDS0_TX_D0N [7]
MIPI_DSI_TX_D0P/LVDS0_TX_D0P [7]

TO GPIO&LCD

LCD_BL_PWM [7,13]
LCD_PWREN_H [7,14]

复到LVDS调光&LCD_3V3

MIPI Panel

LCD_BL_PWM [7,13]

TP COF Connector

I2C2_SCL_TP [7]
I2C2_SDA_TP [7]
TP_RST_L [7]
TP_INT_L [7]

TO GPIO

LVDS_LCD0_RST_L
PDM_SDI1_M1 [7]

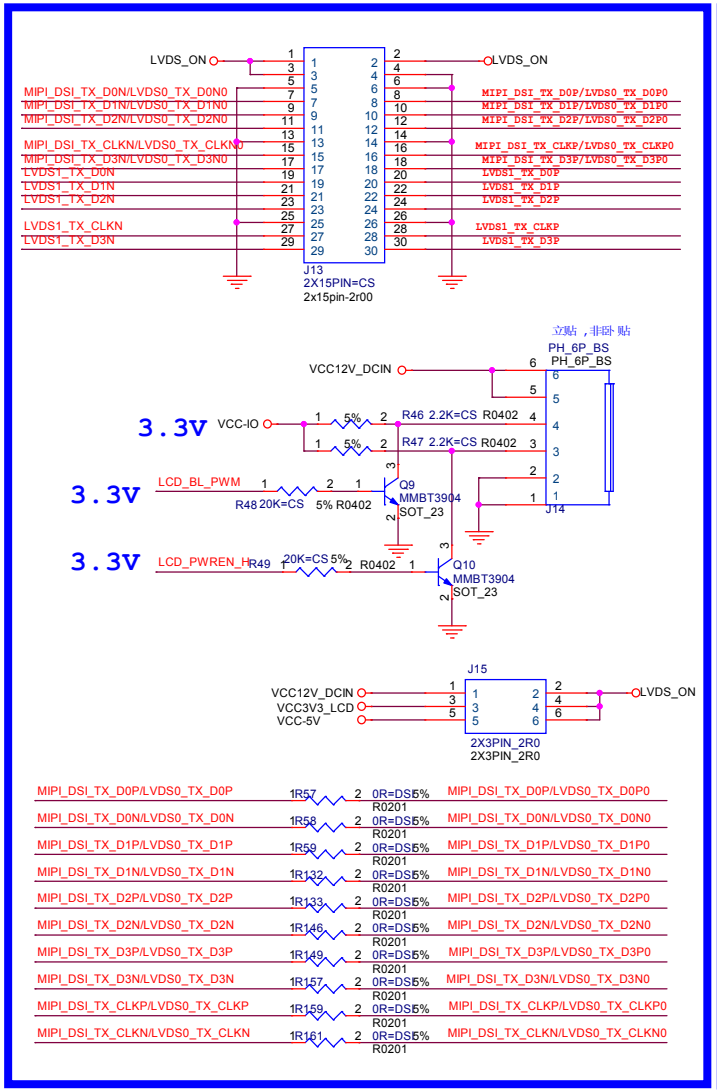

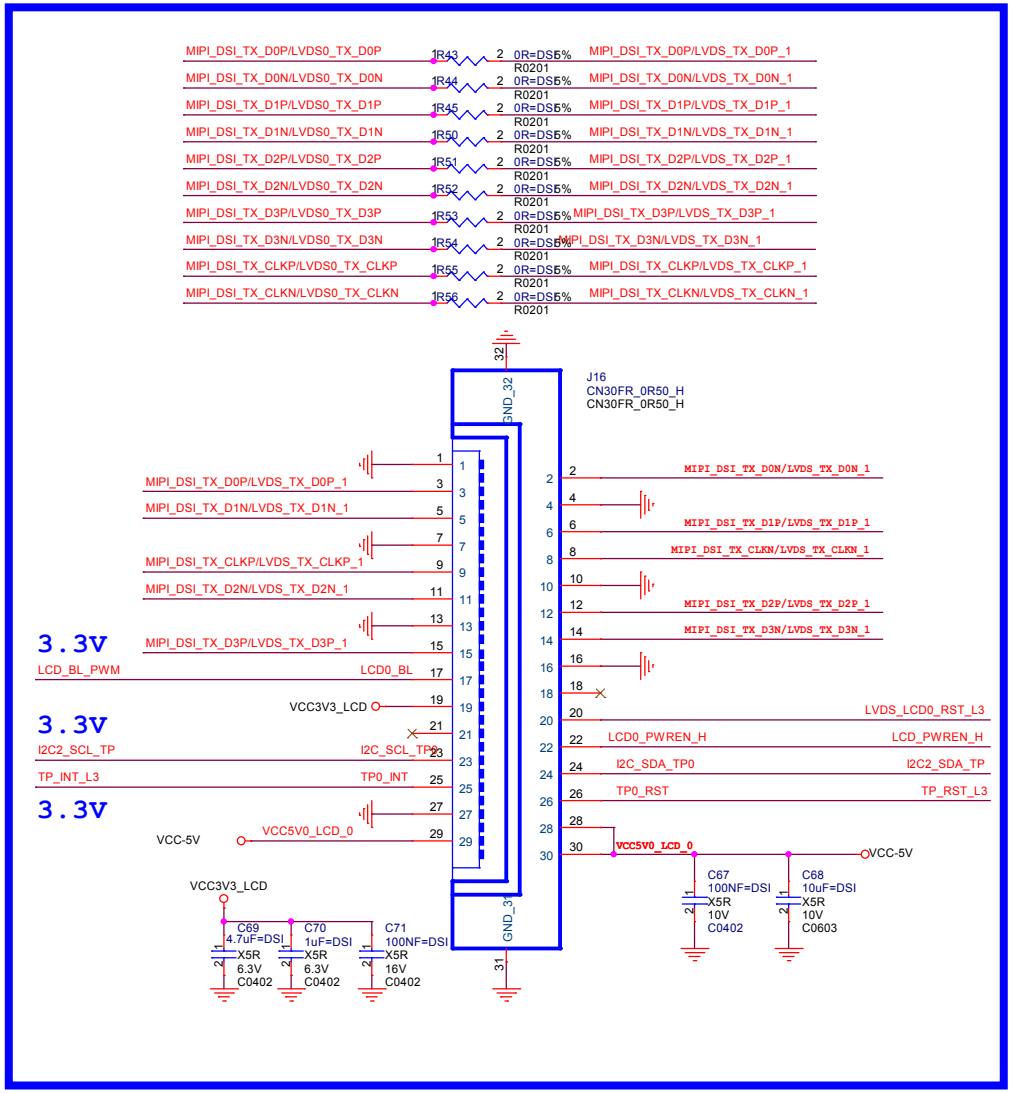

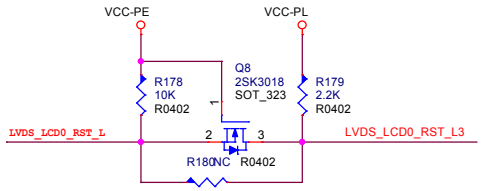

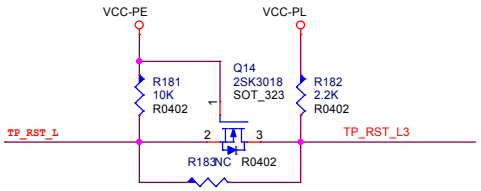

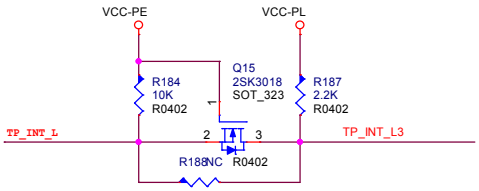

KICKPI 深圳市橙视科技发展有限公司		Document Title A133	
Page Title LVDS-MIPI-DSI		PCB NO. K5C_V1.0	
Page Size A3	Sch Designer TIM	Pcb Designer TIM	Project Stage V10
Date: Wednesday, April 09, 2025		Sheet 13 of 21	

RTCIC_INT_L — RTCIC_INT_L [7]
I2C_SDA_RTCIC — TWI3_SDA [7]
I2C_SCL_RTCIC — TWI3_SCK [7]
LED-EN — LED-EN [7,15]
LCD_PWREN_H — LCD_PWREN_H [7,13]
FAN_EN — FAN_EN [7]

RTC IC

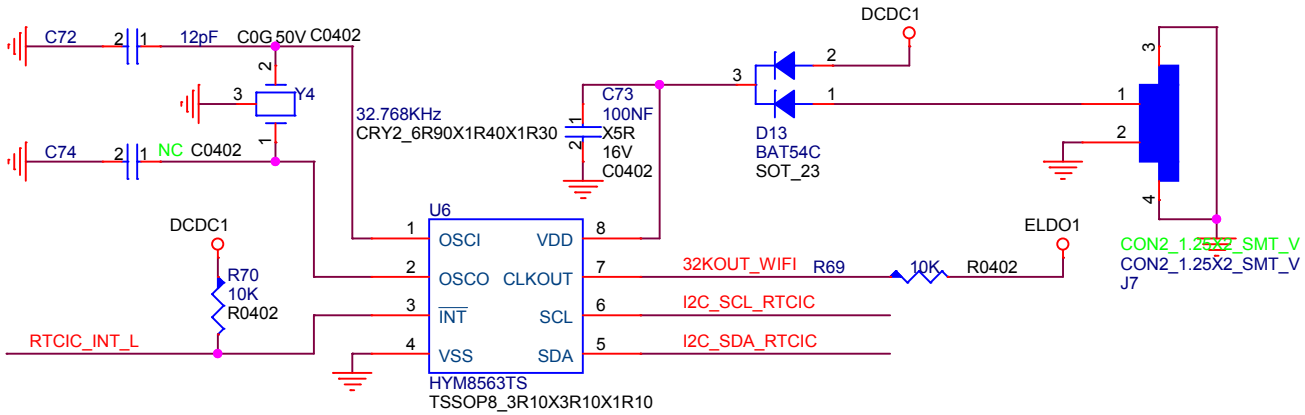

Address:Read A3H,Write A2H

Power for LVDS Panel

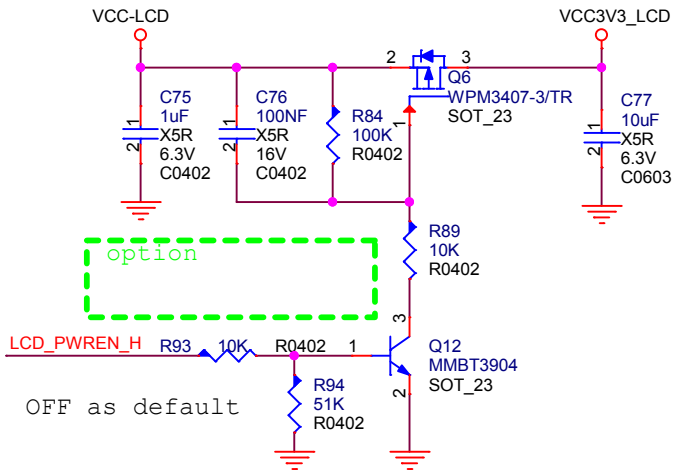

OFF as default

FAN

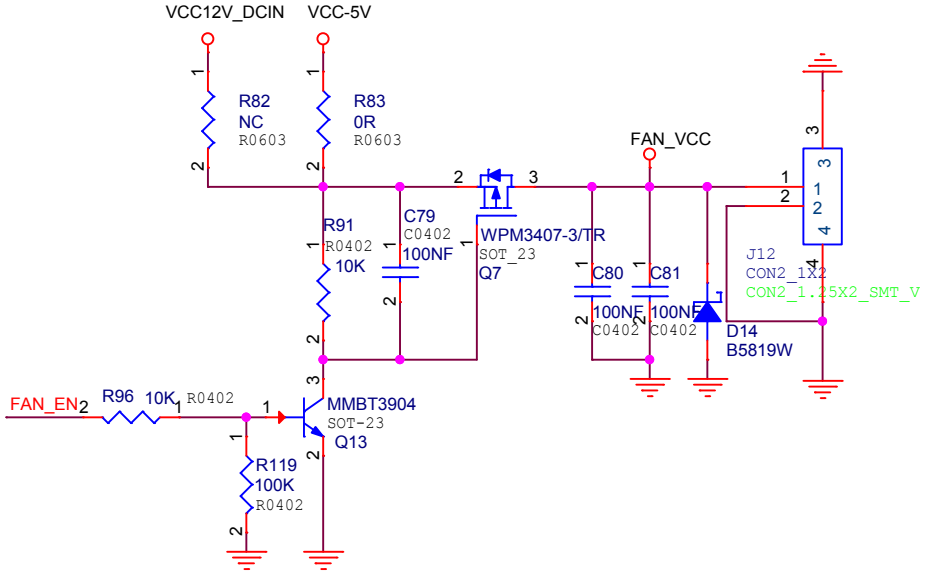

KICKPI 深圳市橙视科技发展有限公司		Document Title A133	
Page Title RTC		PCB NO. K5C_V1.0	
Page Size A4	Sch Designer TIM	Pcb Designer TIM	Project Stage V10
Date: Wednesday, April 09, 2025		Sheet 14 of 21	

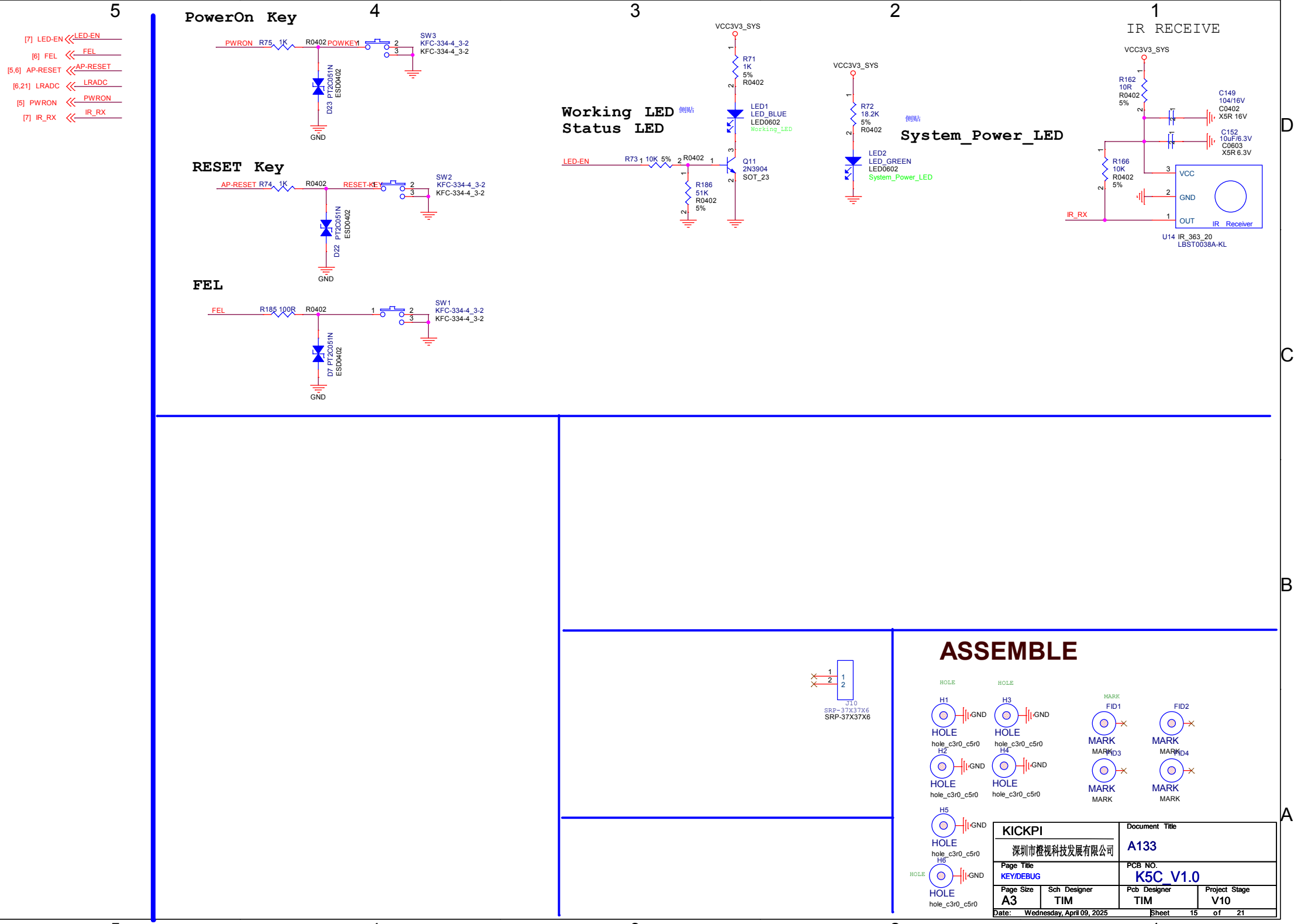
PowerOn Key
PWRON R75 1K R0402 POWKEY SW3 KFC-334-4_3-2 KFC-334-4_3-2
D23 PT2C051N ESD0402
GND
RESET Key
AP-RESET R74 1K R0402 RESET-KEY SW2 KFC-334-4_3-2 KFC-334-4_3-2
D22 PT2C051N ESD0402
GND
FEL
FEL R185 100R R0402 SW1 KFC-334-4_3-2 KFC-334-4_3-2
D7 PT2C051N ESD0402
GND
[7] LED-EN LED-EN
[6] FEL FEL
[5,6] AP-RESET AP-RESET
[6,21] LRADC LRADC
[5] PWRON PWRON
[7] IR_RX IR_RX
Working LED 侧贴
Status LED
VCC3V3_SYS
R71 1K 5% R0402
LED1 LED_BLUE LED0602 Working_LED
LED-EN R73 10K 5% R0402
R186 51K R0402 5%
Q11 2N3904 SOT_23
VCC3V3_SYS
R72 18.2K 5% R0402
侧贴
System_Power_LED
LED2 LED_GREEN LED0602 System_Power_LED
IR RECEIVE
VCC3V3_SYS
R162 10R R0402 5%
C149 104/16V C0402 X5R 16V
C152 10uF/6.3V C0603 X5R 6.3V
R166 10K R0402 5%
IR_RX
VCC
GND
OUT
IR Receiver
U14 IR_363_20 LBST0038A-KL
J10 SRP-37X37X6
SRP-37X37X6
ASSEMBLE
HOLE
H1 GND HOLE hole_c3r0_c5r0
H2 GND HOLE hole_c3r0_c5r0
H3 GND HOLE hole_c3r0_c5r0
H4 GND HOLE hole_c3r0_c5r0
H5 GND HOLE hole_c3r0_c5r0
H6 GND HOLE hole_c3r0_c5r0
MARK
FID1 MARK
FID2 MARK
FID3 MARK
FID4 MARK
KICKPI
深圳市橙视科技发展有限公司
Document Title
A133
Page Title
KEY/DEBUG
PCB NO.
K5C_V1.0
Page Size
A3
Sch Designer
TIM
Pcb Designer
TIM
Project Stage
V10
Date: Wednesday, April 09, 2025
Sheet 15 of 21

WIFI+BT

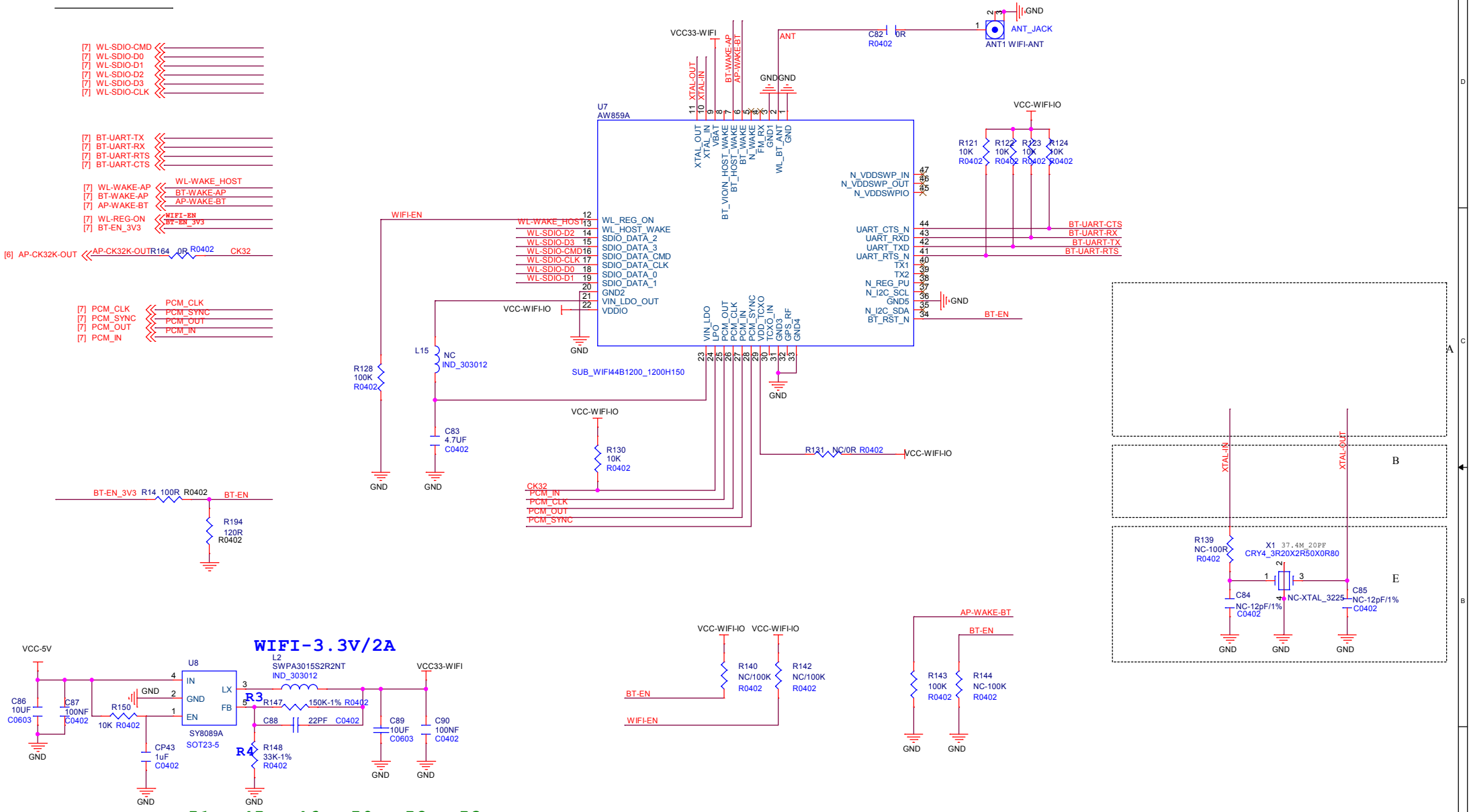

RW51 RW45 RW46 RW50 RW52 RW53

不带蓝牙遥控	IO为1.8V	NC	NC	NC	0R	NC	0R
	IO为3.3V	NC	NC	NC	0R	0R	NC
带蓝牙遥控	IO为1.8V	0R	NC	NC	NC	NC	NC
	IO为3.3V	0R	0R	0R	NC	NC	NC

KICKPI 深圳市橙视科技发展有限公司		Document Title A133	
Page Title WiFi+BT		PCB NO. K5C_V1.0	
Page Size A3	Sch Designer TIM	Pcb Designer TIM	Project Stage V10
Date: Wednesday, April 09, 2025		Sheet 16 of 21	

12V/3A DCIN

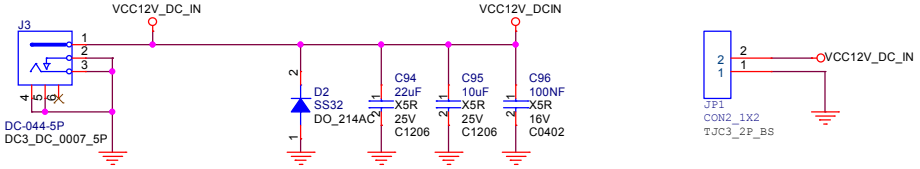

VCC5V0_SYS

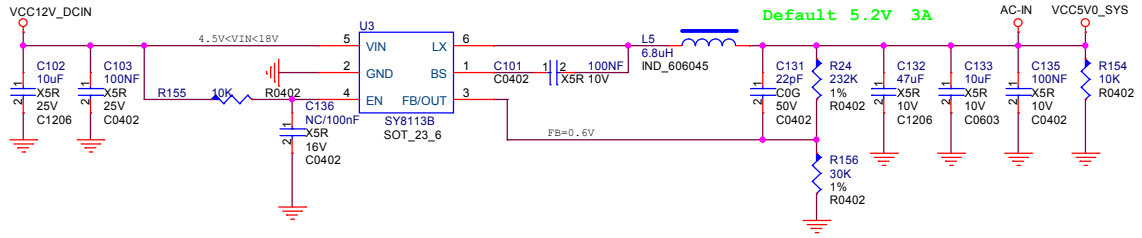

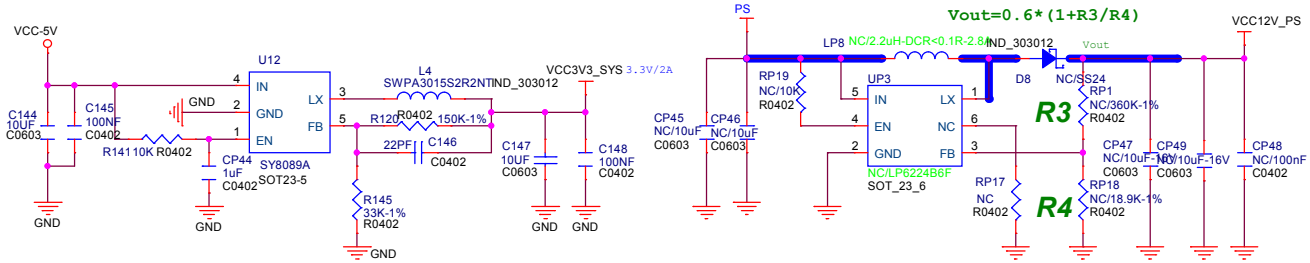

KICKPI 深圳市橙视科技发展有限公司		Document Title A133	
Page Title POWER		PCB NO. K5C_V1.0	
Page Size A3	Sch Designer TIM	Pcb Designer TIM	Project Stage V10
Date: Friday, April 11, 2025		Sheet 17 of 21	

USB : USB2.0 HOST1

USB_HUB

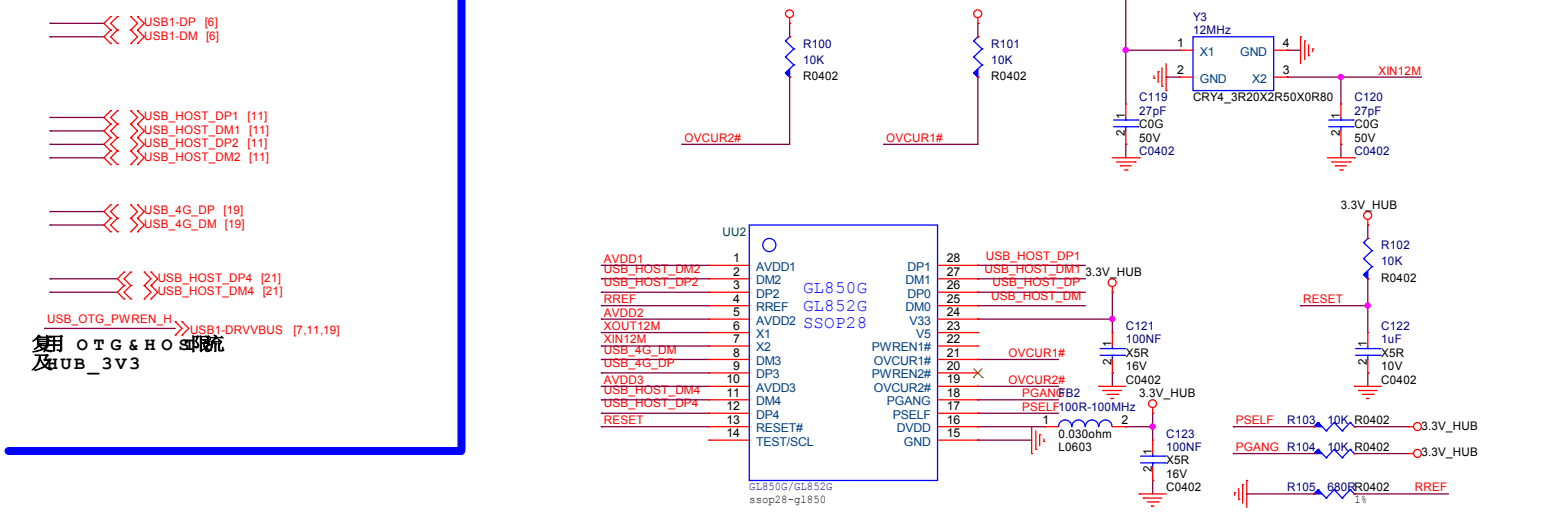

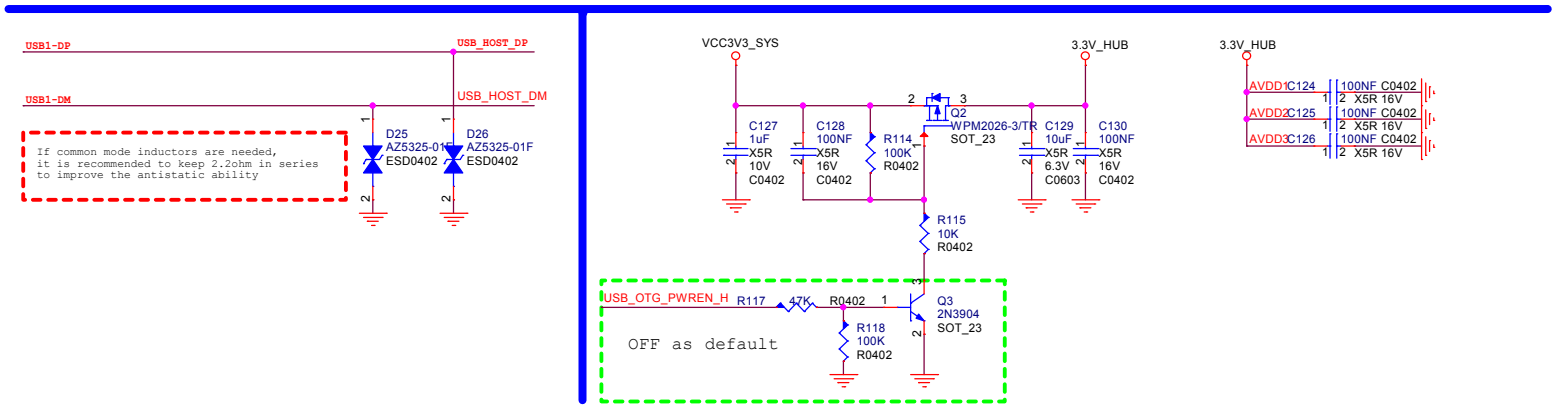

KICKPI 深圳市橙视科技发展有限公司		Document Title A133	
Page Title USB-HUB		PCB NO. K5C_V1.0	
Page Size A3	Sch Designer TIM	Pcb Designer TIM	Project Stage V10
Date: Wednesday, April 09, 2025		Sheet 18 of 21	

4G_USB2.0

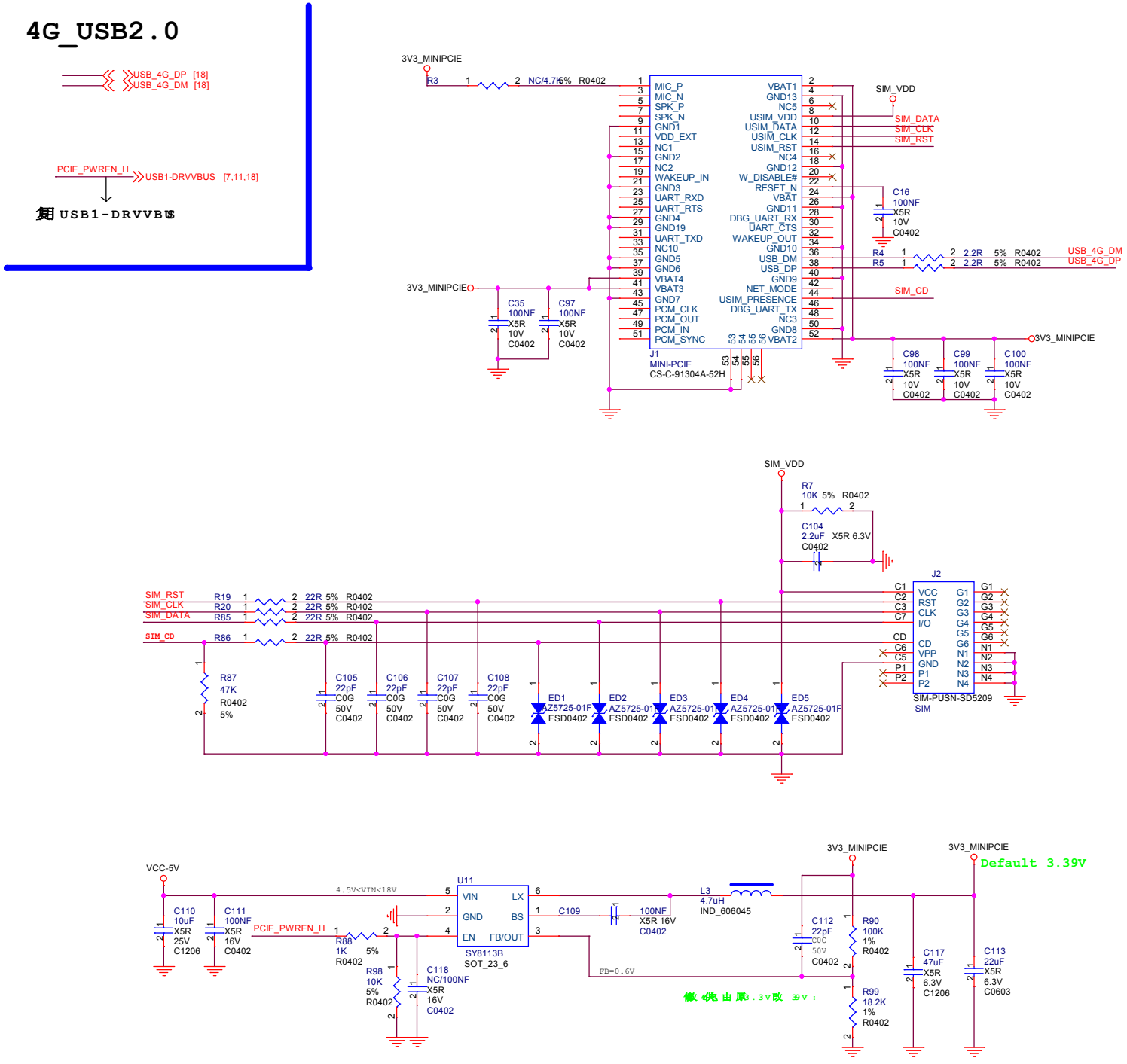

KICKPI 深圳市橙视科技发展有限公司		Document Title A133	
Page Title 4G_MINI_USB2.0		PCB NO. K5C_V1.0	
Page Size A3	Sch Designer TIM	Pcb Designer TIM	Project Stage V10
Date: Wednesday, April 09, 2025		Sheet 19 of 21	

10M/100M/1000M ETH

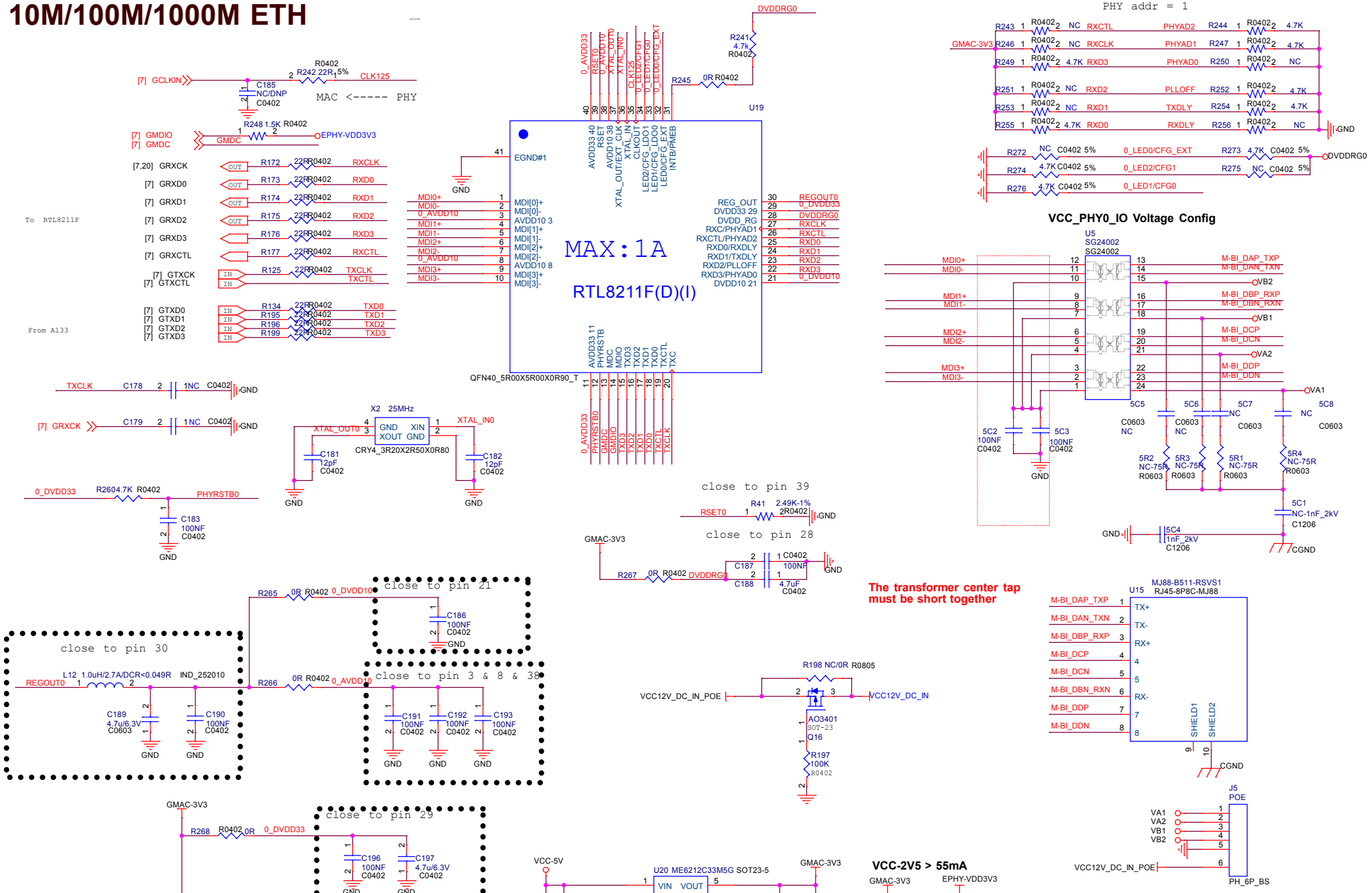

KICKPI 深圳市橙视科技发展有限公司	Document Title A133		
Page Title Ethernet	PCB NO. K5C_V1.0		
Page Size A3	Sch Designer TIM	Pcb Designer TIM	Project Stage V10
Date: Wednesday, April 09, 2025	Sheet 20 of 21		

GPIO

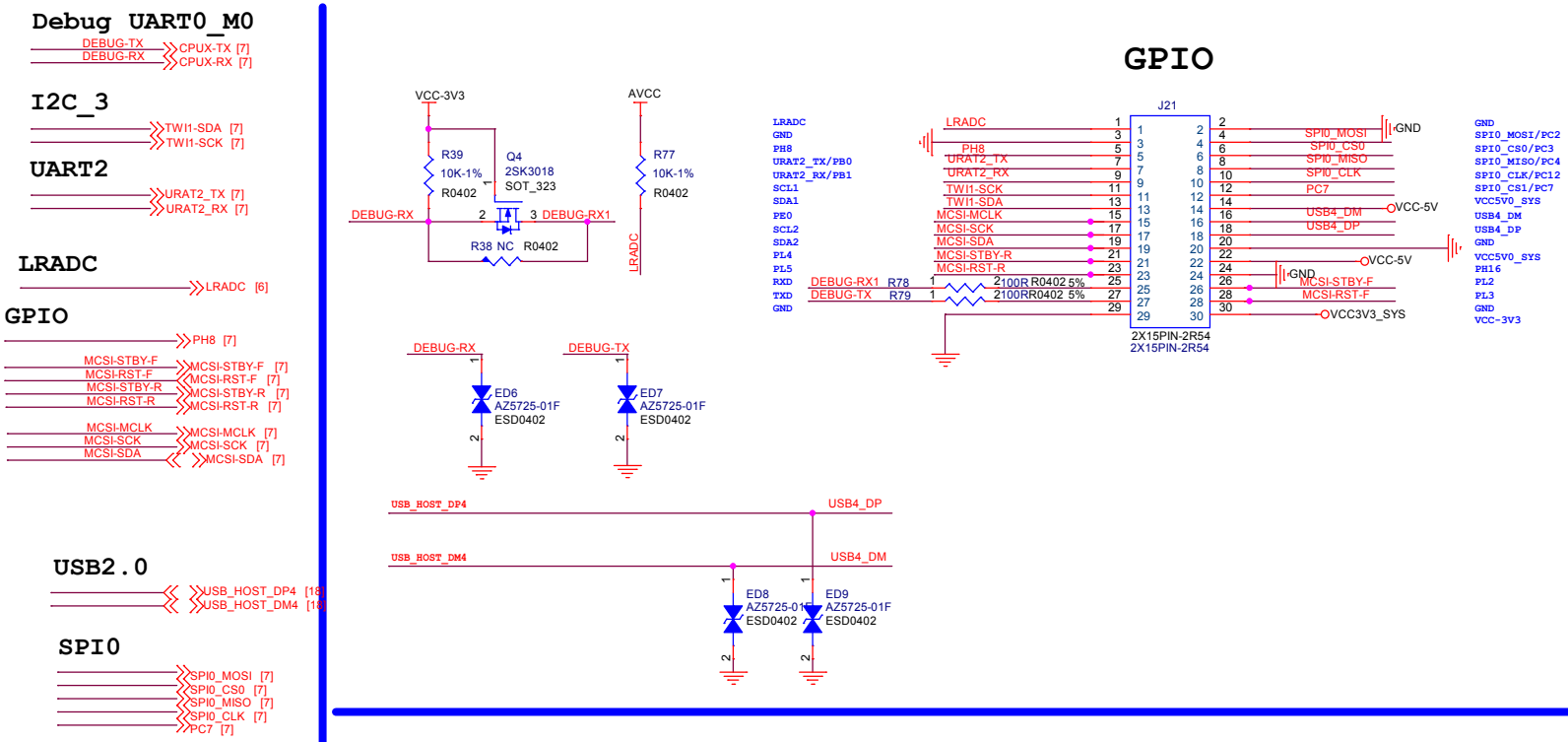

KICKPI 深圳市橙视科技发展有限公司	Document Title: A133
Page Title: GPIO_Debug UART_FAN	PCB NO.: K5C_V1.0
Page Size: A3 / Sch Designer: TIM	Pcb Designer: TIM / Project Stage: V10
Date: Wednesday, April 09, 2025	Sheet 21 of 21