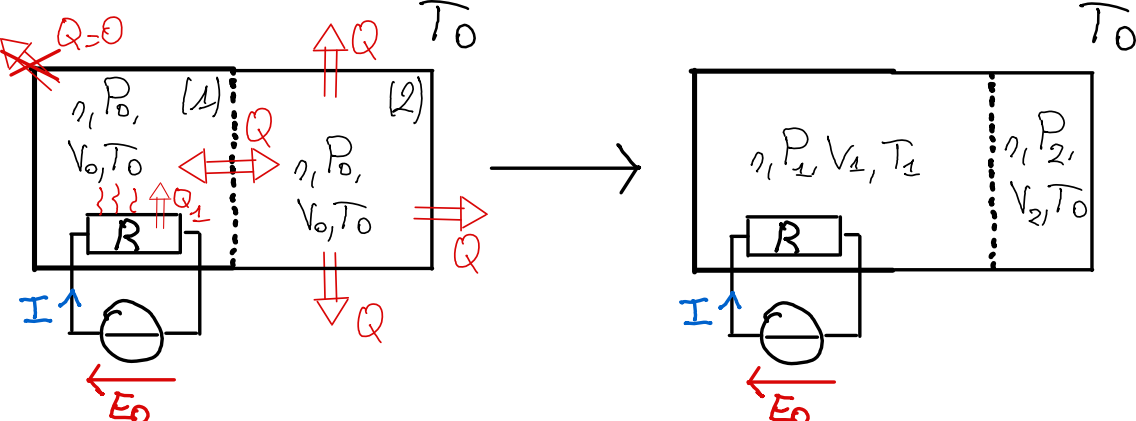
Q=0
Q
T0
(1)
(2)
n, P0,
V0, T0
Q
n, P0,
V0, T0
Q1
R
Q
I
Q
E0
T0
n, P1, V1, T1
n, P2,
V2, T0
R
I
E0