AKADEMIA GÓRNICZO-HUTNICZA

Project Documentation

Distance Measurement System Using the HCSR04 Sensor on the STM32 Platform

Microprocessor Systems II

Electronics – 3rd year

Author:
Norbert Bukała

27.01.2026

1. Project Objective

The objective of the project was to design and implement a measurement system based on an STM32 microcontroller that:

- measures distance using the HCSR04 ultrasonic sensor,
- controls the brightness of an LED depending on the measured distance (PWM),
- allows servo control using a joystick (ADC + DMA),
- displays current measurement data on an SSD1306 OLED display,
- uses interrupts, timers, DMA and PWM.

The project demonstrates the practical use of STM32 microcontroller peripherals in a real-time system.

2. Hardware Components Used:

- STM32G474RE microcontroller
- HCSR04 ultrasonic sensor
- OLED display 0.96″ 128×64 px (I2C)
- SG90 servo motor (180 degrees)
- Analog joystick (X and Y axes)

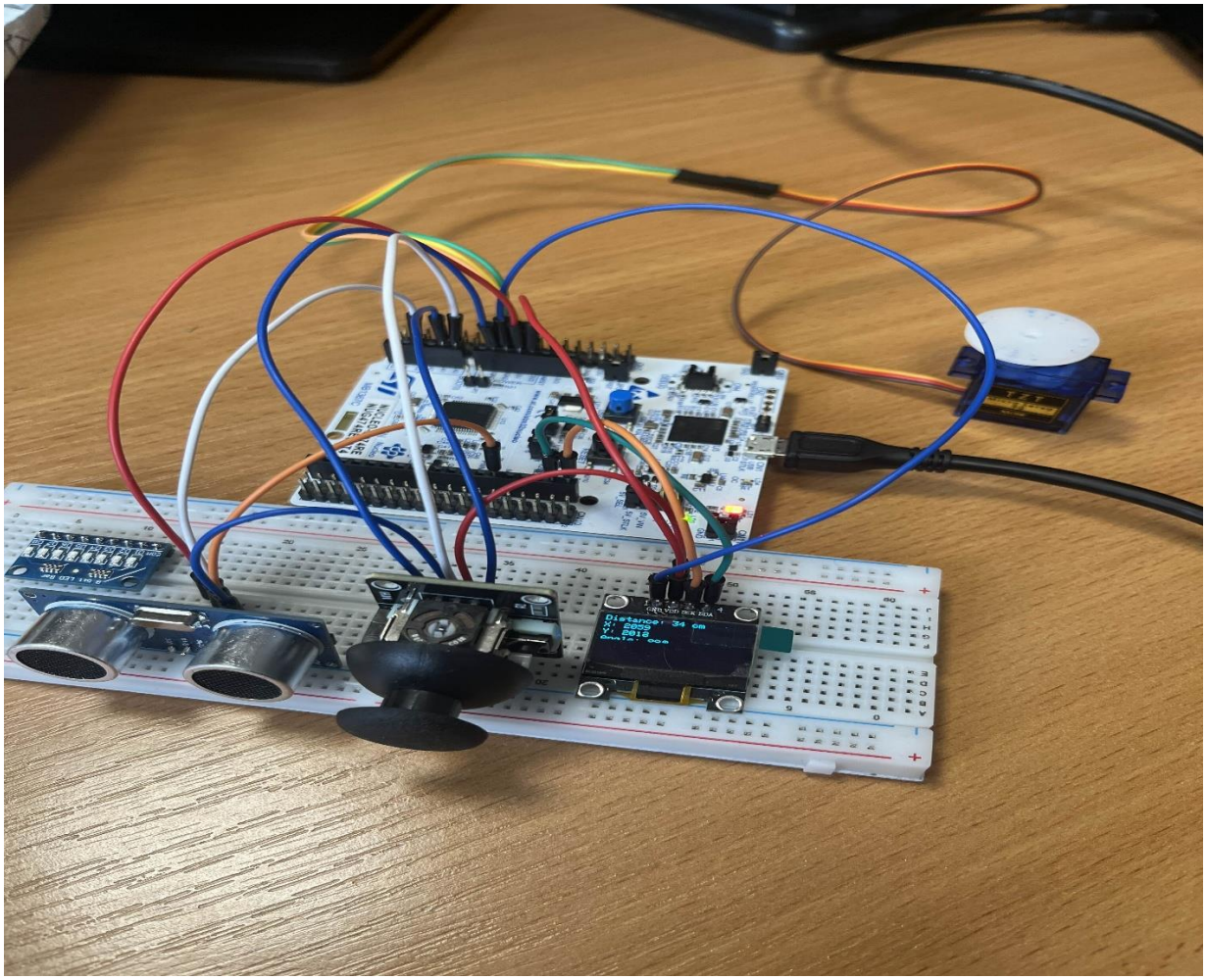

3. System Architecture:

The system consists of several cooperating blocks:

- ADC + DMA – reading joystick values (X and Y axes) without CPU involvement
- Timer + PWM – controlling LED brightness and generating the TRIG pulse for the HCSR04 sensor
- Timer + Input Capture + interrupts – measuring the duration of the ECHO signal
- I2C – communication with the OLED display
- Software timers (HAL_GetTick) – periodic execution of measurements and screen refresh

4. Project Diagram:

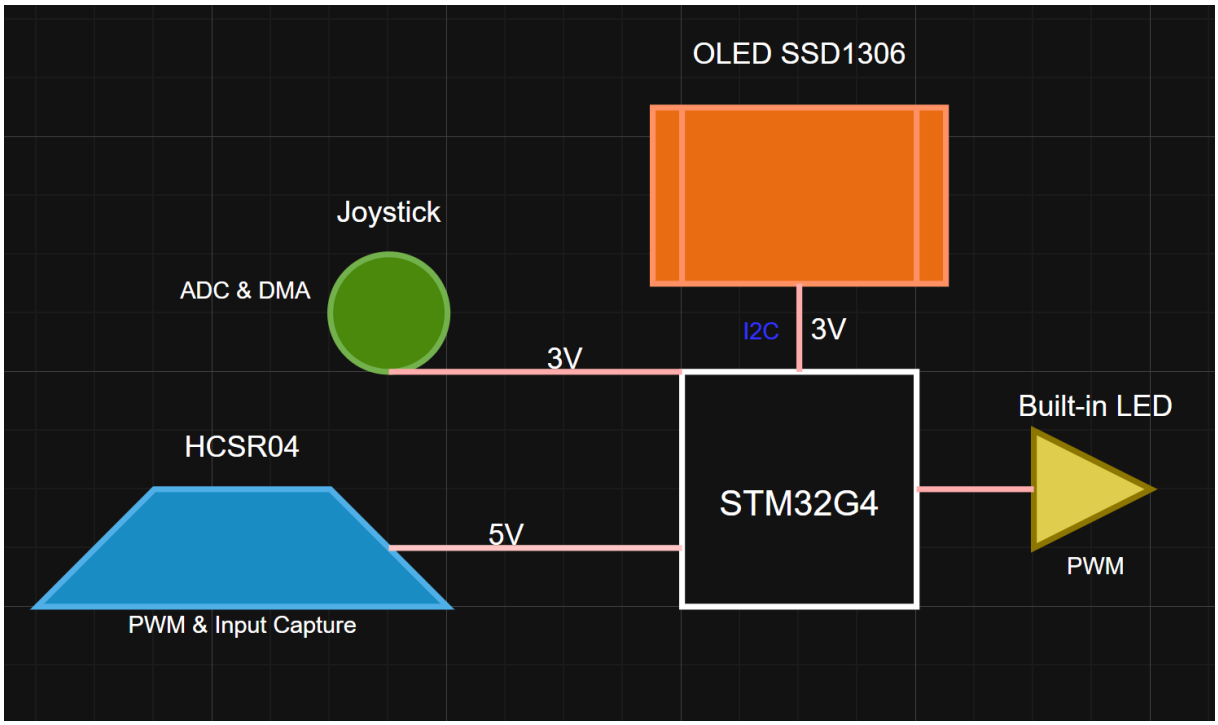

5. HCSR04 Sensor Operation

5.1 Principle of Operation

1. The HCSR04 sensor operates as follows:
2. A pulse of at least 10 µs is applied to the TRIG pin.
3. The sensor emits an ultrasonic wave.
4. After the wave reflects from an obstacle, the ECHO pin goes HIGH.
5. The duration of the HIGH state on the ECHO pin corresponds to the travel time of the wave.

5.2 TRIG Signal Generation

The TRIG signal is generated using hardware PWM:

- the prescaler is configured so that one timer tick = 1 μs,
- the CCR (Pulse) value is set to 11, which generates a pulse of approximately 11 μs,
- this configuration satisfies the sensor manufacturer's requirements.

5.3 ECHO Signal Measurement – Input Capture

The echo time is measured using the timer Input Capture mode:

- Channel 1 (Direct Input) – detects the rising edge (start of ECHO),
- Channel 2 (Indirect Input) – detects the falling edge (end of ECHO),
- an interrupt is triggered after a capture event.

Inside the interrupt handler, the difference between the two CCR register values is calculated, which provides the ECHO pulse duration in microseconds.

6. LED Brightness Control (PWM)

The brightness of the LED depends on the measured distance:

- closer object → higher PWM duty cycle,
- farther object → lower brightness.

A mapping function converts the range 2–50 cm → 999–0, where 999 corresponds to the ARR value (timer counter period) configured for the PWM timer.

7. Joystick Reading – ADC + DMA

The joystick has **two axes (X and Y)**, therefore:

- the ADC operates in multi-channel mode,
- data are collected using DMA,
- averaging of 10 samples is performed,
- the CPU is not blocked during ADC conversion.

The Y axis of the joystick is mapped to a servo angle from 0–180°, which controls the servo motor position.

8. OLED Display

The SSD1306 display operates in buffered mode:

1. SSD1306_Clear() clears the RAM buffer.
2. GFX functions draw text and symbols into the buffer.
3. SSD1306_Display() sends the buffer to the display via I2C.

Displayed information:

- current distance (cm)
- joystick axis values
- servo angle with degree symbol (°)

9. Software Timers (HAL_GetTick)

Two software timers are implemented:

- **SoftTimerHCSR04 (50 ms)** – periodic distance measurement
- **SoftTimerOLED (100 ms)** – display refresh

Advantages:

- measurements and display updates **do not block the main loop**,
- the system operates **stably and predictably**.

10. STM32 Peripherals Used

- ADC + DMA
- Timers (PWM, Input Capture)
- Interrupts
- I2C
- GPIO

11. Conclusions

The project demonstrates practical use of:

- time measurements using Input Capture,
- precise PWM signal generation,
- I2C communication with a display,
- DMA for efficient ADC data processing.

The system operates in a non-blocking manner, is well structured, and can be easily extended in the future (for example by adding measurement filtering, alarms, or RFID-based locking/unlocking mechanisms).