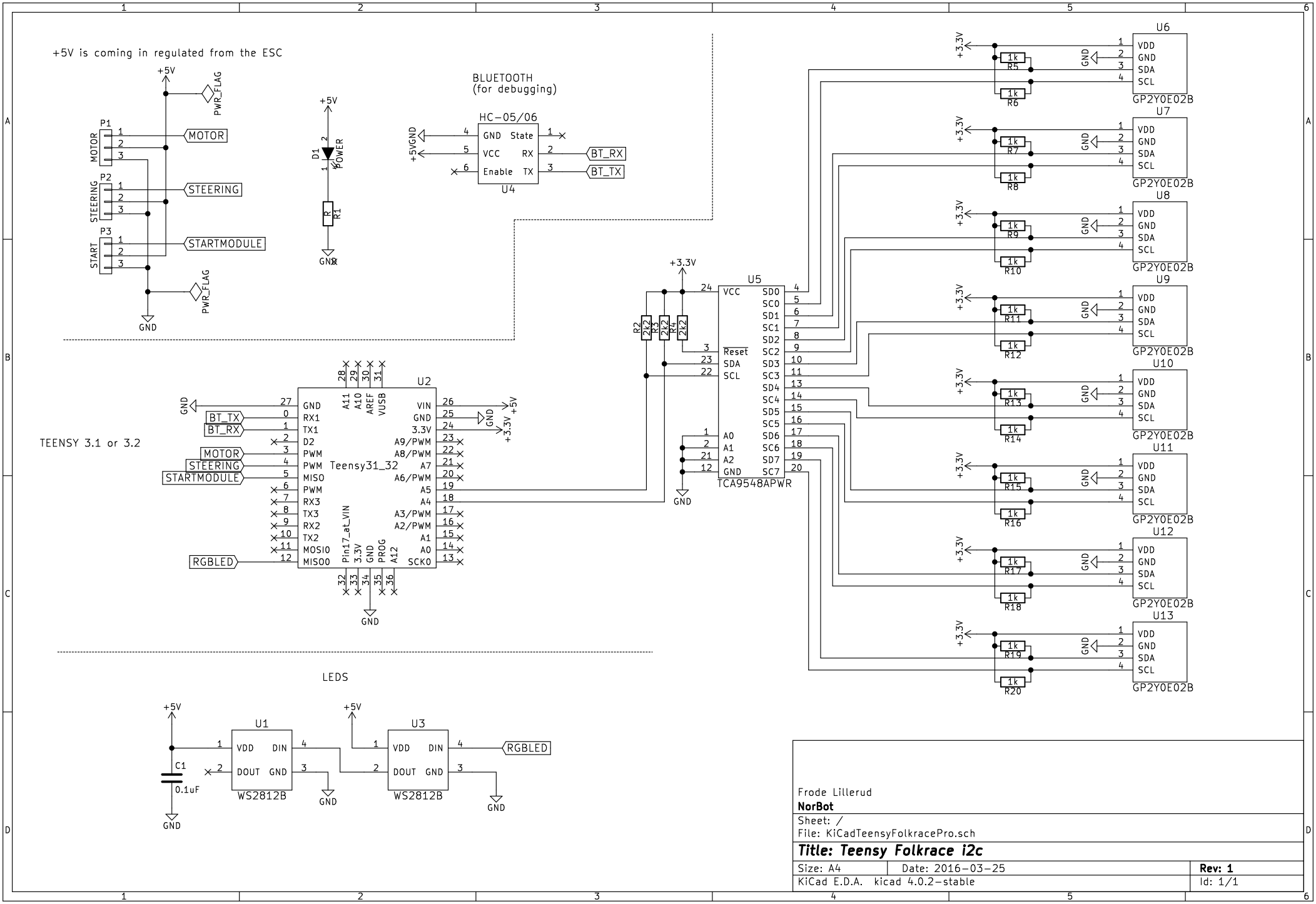

Frode Lillerud

NorBot

Sheet: /

File: KiCadTeensyFolkracePro.sch

Title: Teensy Folkrace i2c

Size: A4	Date: 2016-03-25	**Rev: 1**
KiCad E.D.A. kicad 4.0.2-stable		Id: 1/1