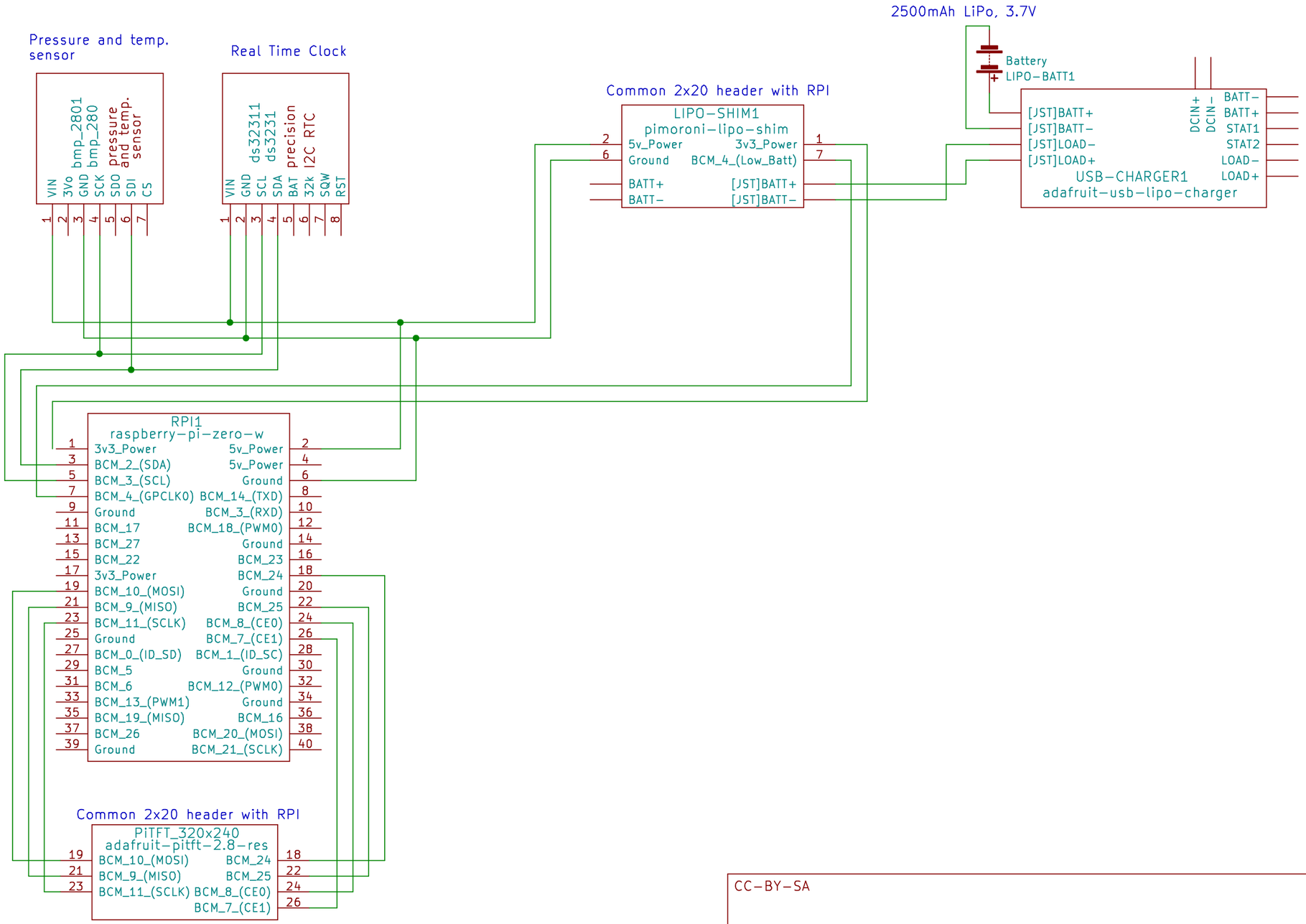

CC-BY-SA

Sheet: /
File: occ.sch

Title: Open Cycling Computer

Size: A4	Date: WORK IN PROGRESS	**Rev: v0.02**
KiCad E.D.A. kicad 4.0.7		Id: 1/1