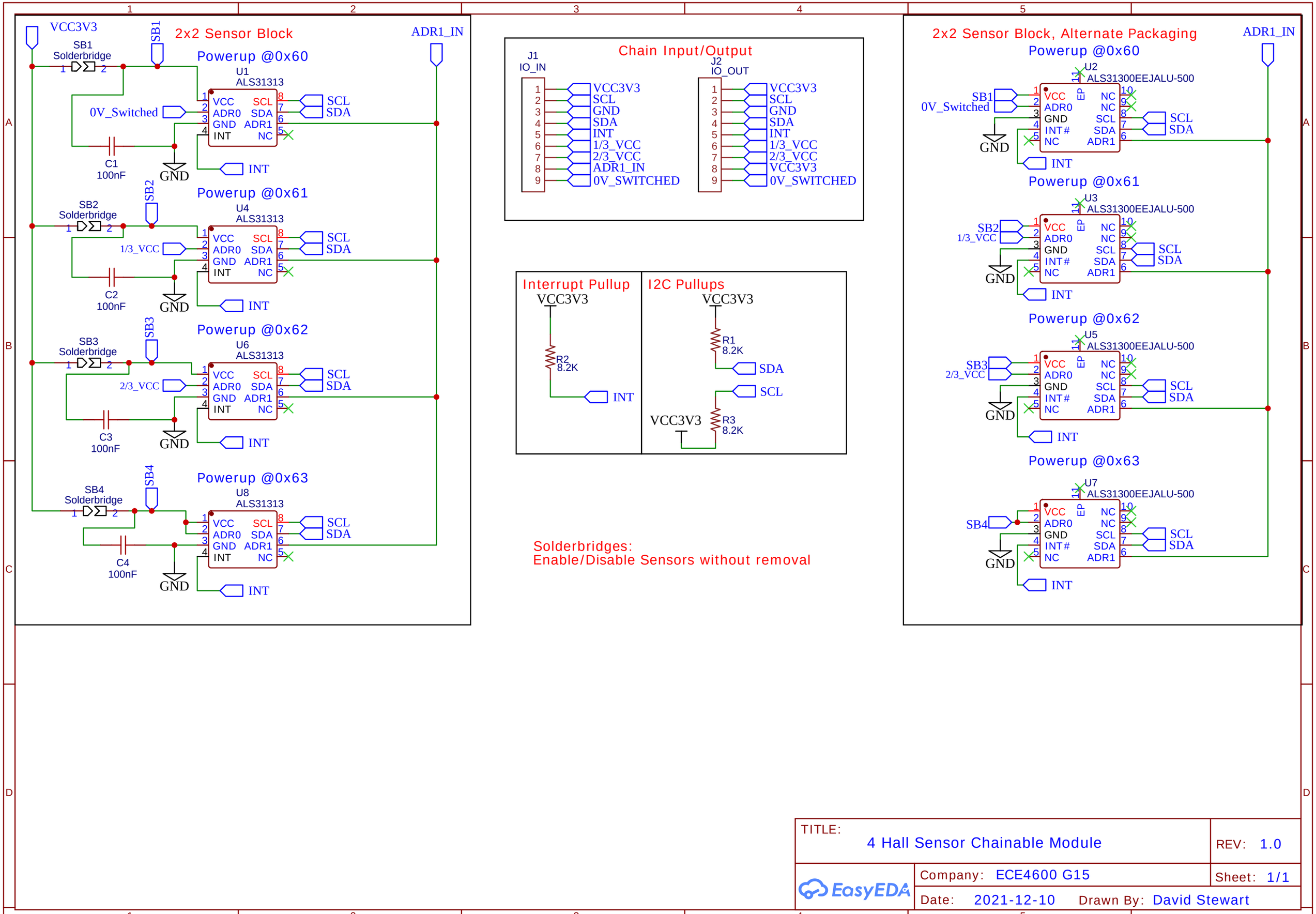

TITLE: 4 Hall Sensor Chainable Module	REV: 1.0
Company: ECE4600 G15	Sheet: 1/1
Date: 2021-12-10 Drawn By: David Stewart	