59190-05: 데이터베이스

Fall 2025, School of Computer Science and Engineering

Practice 03 – 대학DB 쿼리 II

Score: 4

Description: 주어진 12개의 질의를 SQL 쿼리로 변환하고 각 질의 별로 SQL 쿼리와 쿼리 결과, 쿼리 결과 레코드 수를 제출합니다. 대학DB는 과제01에서 생성한 것(large relation)을 사용합니다. 쿼리 결과에 존재하는 모든 null값은 0으로 대치하여야 합니다. 쿼리 결과가 너무 많을 경우 일부 레코드만을 캡처하여 제출해도 무방합니다.

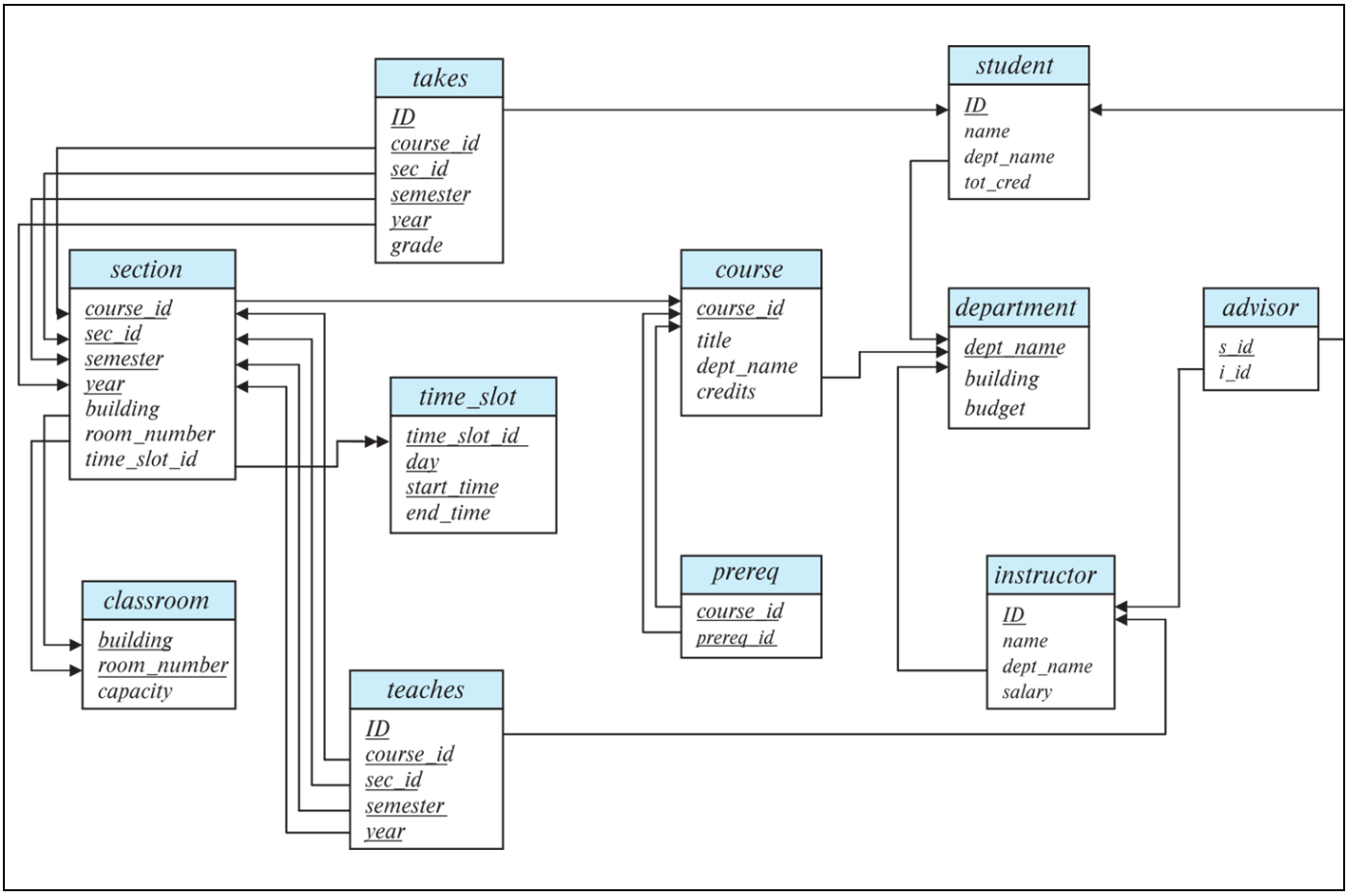

<대학DB 스키마>

분량 제한

은 없으며 자유 형식으로 제출하시기 바랍니다.

CAUTION: 규격에 맞지 않는 제출물 제출 및 기간 외 제출은 미제출로 간주합니다

USE UNIVERSITY_DB; 를 적용한 후 문제를 해결하였다.

질의1. 모든 학생에 대해 학생 ID와 F를 포함한 총 수강 학점(takes 테이블 기준)을 조회하시오.

```
SELECT
    ID,
    SUM(c.credits) as "SUM"
FROM takes as t
JOIN student as s USING(ID)
JOIN course as c USING(course_id)
GROUP BY ID;
```

2000 row(s) returned

Result Grid Filter Rows: Search Export:

ID	SUM
10838	62
1087	58
11377	46
12236	44
12683	61
14829	59
15249	53
16311	43
16528	70
16907	65
16993	70
20002	68
20084	68
2133	58
21692	59
22260	40
22620	64
23457	78
2423	49
25143	45
25331	62
25780	36
259	47
26473	79
28952	42
29803	53
30222	67
32464	62
33094	28
34126	60
34331	44
34569	59
35498	51
35523	33
35687	50

질의2. 최소 3번 이상 선수과목(prerequisite course)을 가르친 교강사에 대해 ID와 이름, 학과명, 가르친 선수과목 개수를 조회하시오.

```
SELECT
    t.ID,
    i.name,
    i.dept_name,
    COUNT(t.course_id)
FROM teaches as t
JOIN prereq as p USING(course_id)
JOIN instructor as i USING(ID)
GROUP BY t.ID
HAVING COUNT(t.course_id) >= 3;
```

9 row(s) returned

Result Grid Filter Rows: Search Export:

ID	name	dept_name	COUNT(t.course_i...
36897	Morris	Marketing	5
74420	Voronina	Physics	5
22591	DAgostino	Psychology	7
99052	Dale	Cybernetics	6
6569	Mingoz	Finance	7
19368	Wieland	Pol. Sci.	3
77346	Mahmoud	Geology	3
41930	Tung	Athletics	3
3199	Gustafsson	Elec. Eng.	3

질의3. 총 100학점(student 테이블의 tot_cred 기준) 이상을 듣고 A+학점이 5개 이상 있는 학생에 대해 ID와 이름, 학과명, A+학점 개수를 조회하시오.

```
SELECT
    s.ID,
    s.name,
    s.dept_name,
    COUNT(t.ID) as "#A+"
FROM student as s
JOIN takes as t USING(ID)
WHERE s.tot_cred >= 100 AND t.grade = "A+"
GROUP BY s.ID
HAVING COUNT(s.ID) >= 5;
```

7 row(s) returned

Result Grid Filter Rows: Search Export:

ID	name	dept_name	#A+
24784	Jessup	Comp. Sci.	5
2848	Carr	Civil Eng.	5
30222	Lepp	Accounting	5
46981	Yalk	Statistics	5
59553	Schoenfl	Mech. Eng.	5
61444	Vries	Cybernetics	9
81207	Masri	Athletics	8

질의4. 50명 이상의 학생을 지도한 교수자에 대해 ID, 이름, 학과명, 연봉(salary), 지도학생 수를 조회하시오.

```
SELECT
    i.*,
    COUNT(a.s_id) as num_student
FROM instructor as i
JOIN advisor as a on i.ID = a.i_id
GROUP BY i.ID, i.name, i.dept_name, i.salary
HAVING COUNT(a.s_id) >= 50;
```

4 row(s) returned

Result Grid Filter Rows: Search Export:

ID	name	dept_name	salary	num_stude...
35579	Soisalon-Soininen	Psychology	62579.61	54
37687	Arias	Statistics	104563.38	50
77346	Mahmoud	Geology	99382.59	54
97302	Bertolino	Mech. Eng.	51647.57	50

질의5. 한 교강사로부터 재수강을 포함하여 강의를 6번 이상 들은 학생에 대해 ID, 이름, 학과명, 해당 교강사로부터 들은 강의 개수를 조회하 시오.

```
SELECT
    s.ID,
    s.name,
    s.dept_name,
    COUNT(te.ID)
FROM takes as ta
JOIN teaches as te USING(course_id, sec_id, year, semester)
JOIN student as s ON ta.ID = s.ID
GROUP BY s.ID, s.name, s.dept_name, te.ID
HAVING COUNT(te.ID) >= 6;
```

19 row(s) returned

Result Grid Filter Rows: Search Export:

ID	name	dept_name	COUNT(te.ID)
8251	Kite	History	6
82697	Ye	Civil Eng.	7
80248	Satoh	English	6
9993	Won	Math	6
16297	Sacchi	Marketing	6
18941	Denecker	History	6
37946	Vrato	Finance	8
81258	Nirenbu	History	6
83573	Pavlovico	English	6
88417	Mitsuhashi	Athletics	6
97551	Labaye	Civil Eng.	7
32245	Saariluoma	Statistics	6
68330	Soisalon-...	Pol. Sci.	6
74016	Moei	Elec. Eng.	6
87651	Liang	Math	6
94142	Simon	Languages	6
15487	Janusze...	Athletics	6
29192	Gomez	Geology	6
89551	Shapiro	History	6

질의6. 2010년도의 모든 강의에 대해 섹션 ID, 코스 ID, 교강사명, 교강사 ID, 교강사 학과명, 수강인원을 조회하시오.

```
SELECT
    te.sec_id,
    te.course_id,
    i.name,
    i.ID,
    i.dept_name,
    COUNT(ta.ID)
FROM teaches as te
JOIN instructor as i ON te.ID = i.ID
JOIN takes as ta USING(course_id, sec_id, semester, year)
WHERE year = 2010
GROUP BY te.sec_id, te.course_id, i.name, i.ID, i.dept_name;
```

11 row(s) returned

sec_id	course_id	name	ID	dept_name	COUNT(ta.ID)
1	270	Sakurai	95709	English	285
1	313	Morris	36897	Marketing	270
1	415	Valtchev	81991	Biology	264
1	443	Voronina	74420	Physics	298
1	476	Romero	43779	Astronomy	284
1	493	Mahmoud	77346	Geology	286
1	679	Luo	4233	English	307
1	692	Tung	41930	Athletics	309
2	735	Mahmoud	77346	Geology	300
1	843	Lembr	14365	Accounting	279
2	867	Sarkar	48570	Pol. Sci.	312

질의7. 모든 학과마다 학과명과 선수과목(prerequisite course) 총 학점을 조회하시오.

```sql
SELECT
    c.dept_name,
    SUM(pc.credits) AS pre_credits
FROM course AS c
JOIN prereq AS p ON c.course_id = p.course_id
JOIN course AS pc ON p.prereq_id = pc.course_id
GROUP BY c.dept_name;
```

19 row(s) returned

Result 6 A Filter Rows: Search Export:

dept_name	pre_credits
Marketing	17
Physics	13
Psychology	33
Finance	17
Athletics	22
Math	9
Cybernetics	51
Mech. Eng.	32
Accounting	13
Statistics	13
Comp. Sci.	20
History	9
Civil Eng.	25
Biology	19
English	16
Geology	16
Pol. Sci.	6
Elec. Eng.	6
Astronomy	7

질의8. 한 과목을 2번 이상 재수강(retaken)한 학생에 대해 ID, 이름, 학과명을 조회하시오.

```
SELECT
    s.ID,
    s.name,
    s.dept_name
FROM student as s
JOIN (
    SELECT
        ID,
        course_id
    FROM takes
    GROUP BY ID, course_id
    HAVING COUNT(course_id) >= 2
) as temp1 USING(ID)
GROUP BY s.ID, s.name, s.dept_name;
```

628 row(s) returned

Result Grid Filter Rows: Search Export:

ID	name	dept_name
10033	Zelty	Mech. Eng.
10454	Ugarte	Pol. Sci.
10527	Kieras	Physics
10663	Okaf	Geology
107	Shabuno	Math
10834	More	Geology
10904	Jerns	History
10917	Morales	Cybernetics
11057	Robinson	Marketing
11101	Glaho	Cybernetics
11194	El-Helw	Pol. Sci.
11262	Foels	Marketing
11422	Saito	Physics
11455	Peyse	Athletics
11855	Mendel…	Languages
12069	Skeen	History
12078	Knutson	Languages
12216	Griffiths	Cybernetics
12326	Watson	Finance
12563	Stone	Marketing
1285	Szczerban	Pol. Sci.
12941	Ren	Marketing
13081	Alqui	Languages
13211	Diab	Civil Eng.
13217	Liu	Athletics
13352	Gorsky	Athletics

질의9. F를 제외한 총 수강 학점(takes 테이블 기준)과 student 테이블의 총 학점(tot_cred)이 다른 학생의 ID와 이름, 학과명을 조회하시오.

```
SELECT
    s.ID,
    s.name,
    s.dept_name
FROM student as s
JOIN (
    SELECT
        t.ID,
        SUM(c.credits) as tot_grade
    FROM takes as t
    JOIN course as c USING(course_id)
    WHERE (grade <> "F " AND grade <> "F")
    GROUP BY t.ID
) as t ON t.ID = s.ID
WHERE s.tot_cred <> t.tot_grade;
```

1981 row(s) returned

Result Grid Filter Rows: Search Export:

ID	name	dept_name
1000	Manber	Civil Eng.
10033	Zelty	Mech. Eng.
10076	Duan	Civil Eng.
1018	Colin	Civil Eng.
10204	Mediratta	Geology
10267	Rzecz	Comp. Sci.
10269	Hilberg	Psychology
10454	Ugarte	Pol. Sci.
10481	Grosch	Astronomy
10527	Kieras	Physics
10556	Reed	English
10663	Okaf	Geology
10693	Zabary	Statistics
107	Shabuno	Math
10705	Terauchi	Physics
10727	Allard	Physics
10736	Veselov…	Elec. Eng.
108	Dhav	Biology
1080	Xue	Languages
10814	Waks	Elec. Eng.
10834	More	Geology
10838	Marlet	Accounting
1087	Roses	Accounting
10904	Jerns	History
10917	Morales	Cybernetics

질의10. F학점을 제외하고 평점이 3.3 이상인 학생들에 대해 ID, 이름, 학과명, F학점을 제외한 평점을 조회하시오.

```
CREATE FUNCTION scoring_grade (grade VARCHAR(5))
    RETURNS FLOAT DETERMINISTIC
    RETURN
        CASE grade
           WHEN "A+" THEN 4
           WHEN "A" THEN 3.666
           WHEN "A " THEN 3.666
           WHEN "A-" THEN 3.333
           WHEN "B+" THEN 3
           WHEN "B " THEN 2.666
           WHEN "B" THEN 2.666
           WHEN "B-" THEN 2.333
           WHEN "C+" THEN 2
           WHEN "C" THEN 1.666
           WHEN "C " THEN 1.666
           WHEN "C-" THEN 1.333
        END;
-- DROP FUNCTION scoring_grade;
SELECT
    s.ID,
    s.name,
    s.dept_name,
    AVG(scoring_grade(t.grade))
FROM student as s
JOIN takes as t USING(ID)
WHERE t.grade <> "F" AND t.grade <> "F "
GROUP BY s.ID, s.name, s.dept_name
HAVING AVG(scoring_grade(t.grade)) >= 3.3;
```

6 row(s) returned

Result Grid Filter Rows: Search Export:

ID	name	dept_name	AVG(scoring_grade(t.grad...
18286	Pang	Finance	3.4000000272478377
19362	Linden	Finance	3.39166667064031
66469	Komori	History	3.3250000178813934
78637	Beeu	Physics	3.4
81207	Masri	Athletics	3.3562500029802322
98619	Nagaraj	Civil Eng.	3.3111111323038735

질의11. 100명 이상을 수용할 수 있는 강의실에 대해 2006년부터 2010년까지 연도마다의 강의실별 사용횟수를 조회하시오.

```
SELECT
    s.year,
    room.building,
    room.room_number,
    COUNT(course_id)
FROM section as s
JOIN classroom as room USING(building, room_number)
WHERE year >= 2006 AND year <= 2010 AND room.capacity >= 100
GROUP BY s.year, room.building, room.room_number;
```

6 row(s) returned

Result Grid Filter Rows: Search Export:

year	building	room_number	COUNT(course_id)
2008	Saucon	113	1
2006	Stabler	105	1
2008	Taylor	812	2
2009	Taylor	812	1
2007	Taylor	812	1
2009	Whitman	134	1

질의12. 각 학과별 소속 교강사 수가 3명 이상인 학과와 그들의 총 연봉 합계를 조회하시오.

```
SELECT
    dept_name,
    sum(salary)
FROM instructor
GROUP BY dept_name
HAVING count(ID) >= 3;
```

20 row(s) returned

Result Grid Filter Rows: Search Export:

dept_name	num_stude...	num_instruc...	num_salary
Accounting	396	4	19291770.63
Astronomy	106	1	8381428.48
Athletics	460	5	35465171.08
Biology	200	2	12257450.00
Civil Eng.	120	0	0.00
Comp. Sci.	216	2	21196829.52
Cybernetics	344	4	33143219.22
Elec. Eng.	392	4	29071794.08
English	380	4	27393839.00
Finance	97	1	10215203.86
Geology	92	1	9143198.28
History	117	0	0.00
Languages	357	3	20499602.83
Marketing	340	4	28593128.75
Math	91	0	0.00
Mech. Eng.	210	2	16760734.20
Physics	192	2	21998764.80
Pol. Sci.	327	3	32717354.98
Psychology	200	2	12228610.00
Statistics	510	6	34575675.25