Data Specs

Mechanical Limit Switch (End Stop) for RAMPS Controller

The basic job of an endstop is to detect when an axis has reached a minimum or maximum bound. A mechanical endstop is the simplest type of endstop: a simple mechanical switch positioned to trigger when a RepRap's axis reaches the end/start of its motion. RepRap's Cartesian printers and many other 3D printers all move the printer head (axis) relative to a start position. The endstop provides the firmware with an indication of where an origin point is located. The homing cycle of a printer uses the endstops to locate the origin of each axis.

SKU: SWH1048

Brief Data:

- Operation Voltage: 5Vdc.
- Output: Normally Open (NO)
- Cable Length: 70cm.
- Dupont 3-wire connection.
- LED Indicator: Detected On.
- Application: RAMPS base & Prusa 3D Printer.
- Board Size: (16x40) mm.

Mechanical Dimensions:

Unit: mm

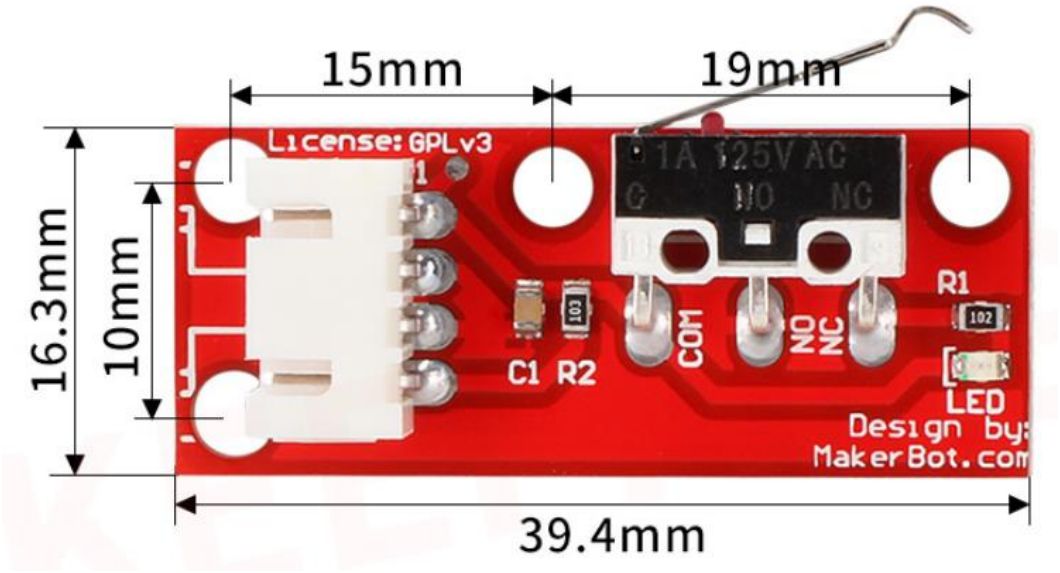

Pin Connection:

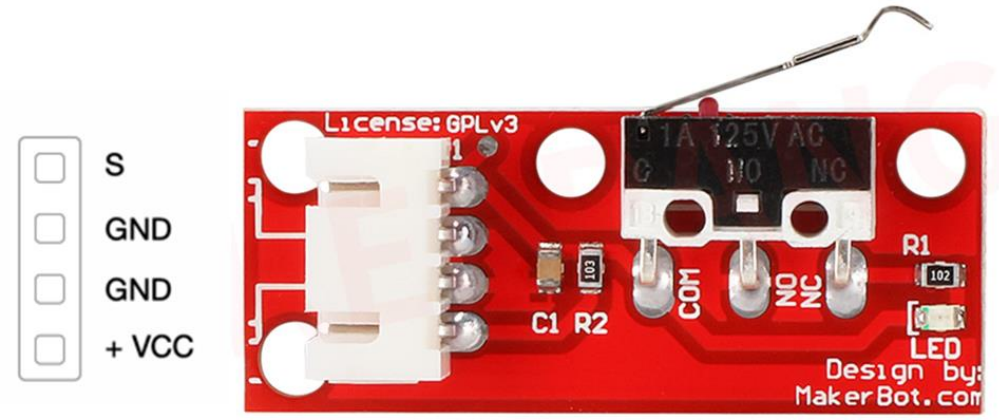

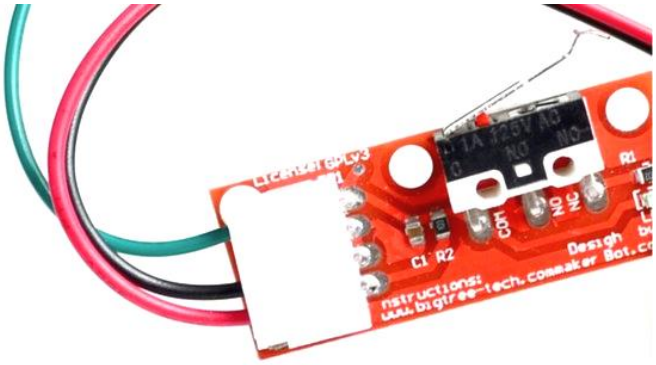

Pin	Function
Red (+Vcc)	+5V Supply
Black (GND)	Ground
Green (S)	Signal, Normally Open (NO) with respect to ground.

Application Examples:

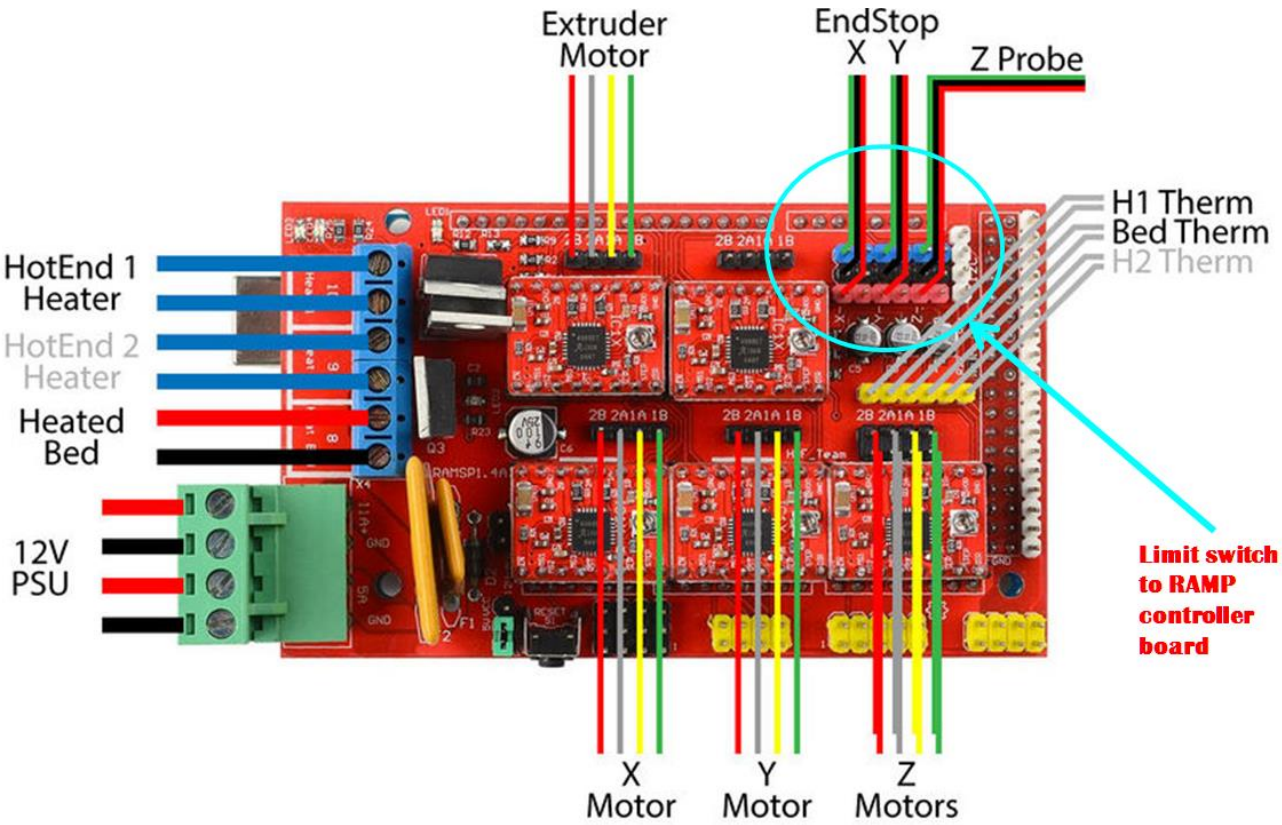

RAMP Board Connection

Handsontec.com

We have the parts for your ideas

HandsOn Technology provides a multimedia and interactive platform for everyone interested in electronics. From beginner to diehard, from student to lecturer. Information, education, inspiration and entertainment. Analog and digital, practical and theoretical; software and hardware.

Hands*On* Technology support Open Source Hardware (OSHW) Development Platform.

Learn : Design : Share

handsontec.com

The Face behind our product quality…

In a world of constant change and continuous technological development, a new or replacement product is never far away – and they all need to be tested.
Many vendors simply import and sell wihtout checks and this cannot be the ultimate interests of anyone, particularly the customer. Every part sell on Handsotec is fully tested. So when buying from Handsontec products range, you can be confident you're getting outstanding quality and value.

We keep adding the new parts so that you can get rolling on your next project.

Breakout Boards & Modules

Connectors

Electro-Mechanical Parts

Engineering Material

Mechanical Hardware

Electronics Components

P

Power Supply

ARDUINO

Arduino Board & Shield

Tools & Accessory