TABLE OF CONTENTS

Section	Title	Page
7.1	INTRODUCTION	7.1-1
7.1.1	Identification of Safety-Related Systems	7.1-1
7.1.1.1	Reactor Trip Systems	7.1-1
7.1.1.2	Fission Process Monitors and Controls	7.1-2
7.1.1.3	Plant Comparison	7.1-2
7.1.2	Identification of Safety Criteria	7.1-2
7.1.2.1	Design Bases	7.1-2
7.1.2.2	Independence of Safety-Related Systems	7.1-3
7.1.2.2.1	Redundancy and Independence of Safety-Related Systems	7.1-3
7.1.2.2.2	Protection Against Multiple Disability for Safety-Related Systems	7.1-4
7.1.2.2.3	Demonstration of Functional Operability of Safety-Related Systems	7.1-4
7.1.2.2.4	Protection System Failure Analysis Design	7.1-4
7.1.2.2.5	Reactivity Control Systems' Malfunctions	7.1-5
7.1.2.3	Missile Protection	7.1-5
7.1.2.4	Periodic Testing of the Protection Systems (IEEE Standard 338-1971)	7.1-6
7.1.2.5	Conformance to IEEE Standard 344-1971	7.1-6
7.1.2.6	Conformance and Exceptions to IEEE Standard 323-1971	7.1-7
7.1.2.7	Conformance to IEEE Standard 336-1971	7.1-7
7.1.2.8	Conformance to 10CFR50.62	7.1-7
7.1.2.9	Instrumentation Piping/Tubing Code Reconciliation Associated With Unit 2 SGR	7.1-7
7.1.3	Control Room Design Review	7.1-7
7.1.4	References for Section 7.1	7.1-8
7.2	REACTOR TRIP SYSTEM	7.2-1
7.2.1	Description	7.2-1
7.2.1.1	System Description	7.2-1
7.2.1.2	Nuclear Instrumentation	7.2-1
7.2.1.3	Principles of Design	7.2-2
7.2.1.4	Electrical Isolation	7.2-2
7.2.1.5	Protection System Identification	7.2-3
7.2.1.6	Manual Actuation	7.2-3
7.2.1.7	Channel Bypass or Removal from Operation	7.2-3
7.2.1.8	Capability for Test and Calibration	7.2-3
7.2.1.9	Information Readout and Indication of Bypass	7.2-4
7.2.1.10	Vital Protective Functions and Functional Requirements	7.2-4
7.2.1.11	Operating Environment	7.2-5
7.2.2	Design Basis Information	7.2-5
7.2.2.1	Separation of Redundant Instrumentation and Controls	7.2-5
7.2.2.2	Design Basis for Protection Circuits	7.2-6
7.2.2.3	Reactor Protection System Testing	7.2-9
7.2.2.4	Primary Power Source	7.2-11

TABLE OF CONTENTS (Continued)

Section	Title	Page
7.2.2.5	Protective Actions	7.2-11
7.2.2.6	Reactor Coolant Flow Measurement	7.2-16
7.2.3	System Evaluation	7.2-17
7.2.3.1	Reactor Protection System and Departure from Nucleate Boiling	7.2-17
7.2.3.2	Specific Control and Protection Interactions	7.2-18
7.2.3.3	Reactor Trip Breakers	7.2-23
7.2.3.4	Tests and Inspections	7.2-24
7.2.4	References for Section 7.2	7.2-24
7.3	ENGINEERED SAFETY FEATURES INSTRUMENTATION	7.3-1
7.3.1	Description	7.3-1
7.3.1.1	System Design	7.3-2
7.3.1.1.1	Engineered Safety Features Actuation Instrumentation Description	7.3-2
7.3.1.1.2	Engineered Safety Features and Associated Systems' Actuation	7.3-2
7.3.1.1.3	Engineered Safety Features Vital Functions	7.3-2
7.3.1.1.4	Engineered Safety Features Calibration and Test	7.3-3
7.3.1.1.5	Feedwater Isolation	7.3-3
7.3.1.1.6	Main Steam Isolation	7.3-3
7.3.1.1.7	Indication	7.3-3
7.3.1.1.8	Engineered Safety Features Instrumentation	7.3-3
7.3.1.1.9	Instrumentation Used During a Loss-of-Coolant Accident (LOCA)	7.3-5
7.3.1.1.10	Engineered Safety Features Control	7.3-7
7.3.1.1.10.1	Safety Injection Only	7.3-8
7.3.1.1.10.2	Blackout Only	7.3-8
7.3.1.1.10.3	Safety Injection Plus Blackout	7.3-9
7.3.1.1.10.4	Safety Injection Plus One 4 kV Vital Bus Undervoltage	7.3-9
7.3.1.1.10.5	Sustained Degraded Vital Bus Voltage (Degraded Grid)	7.3-10
7.3.1.1.10.6	Tests and Inspections	7.3-10
7.3.1.2	Design Bases	7.3-10
7.3.1.2.1	General Design Criteria	7.3-10
7.3.1.2.2	Environmental Capability	7.3-11
7.3.2	System Evaluation	7.3-11
7.3.2.1	Pressurizer Pressure	7.3-12
7.3.2.2	Motor and Valve Control	7.3-12
7.3.2.3	Manual Control of Engineered Safety Features	7.3-13
7.3.2.4	Testing	7.3-13
7.3.2.5	Containment Flooding Analysis	7.3-17
7.3.2.6	Single Failure of Components	7.3-20
7.3.2.7	Electrical Interlocks	7.3-20
7.3.3	References for Section 7.3	7.3-23
7.4	SYSTEMS REQUIRED FOR SAFE SHUTDOWN	7.4-1

TABLE OF CONTENTS (Continued)

Section	Title	Page
7.4.1	Hot Shutdown Outside the Control Room	7.4-1
7.4.2	Cold Shutdown Outside the Control Room	7.4-1
7.5	SAFETY-RELATED DISPLAY INSTRUMENTATION	7.5-1
7.5.1	Description	7.5-1
7.5.2	Bypass Indication	7.5-2
7.5.3	Evaluation	7.5-4
7.5.3.1	Identification of Design Basis Differences from Regulatory Guide 1.97	7.5-5
7.5.3.2	Regulatory Guide 1.97 Compliance Levels	7.5-7
7.5.3.3	Planned Actions	7.5-9
7.5.3.4	Relocated Requirements	7.5-10
7.6	ALL OTHER INSTRUMENTATION REQUIRED FOR SAFETY	7.6-1
7.6.1	Residual Heat Removal Isolation Valves	7.6-1
7.6.2	Accumulator Isolation Valves	7.6-2
7.6.3	Pressurizer Overpressure Protection System (POPS)	7.6-2
7.6.3.1	Design Basis	7.6-2
7.6.3.2	System Design and Operation	7.6-2
7.6.3.3	Design Evaluation	7.6-4
7.6.4	Feedwater Pump Turbine Trips	7.6-5
7.6.5	References for Section 7.6	7.6-6
7.7	CONTROL SYSTEMS NOT REQUIRED FOR SAFETY	7.7-1
7.7.1	Design Basis	7.7-1
7.7.1.1	Reactor Control System	7.7-1
7.7.1.2	Operating Control Stations	7.7-2
7.7.2	System Design	7.7-3
7.7.2.1	Rod Cluster Control Assembly Arrangements	7.7-4
7.7.2.2	Rod Control	7.7-4
7.7.2.2.1	Control Bank Rod Insertion Monitor	7.7-4
7.7.2.2.2	Rod Deviation Alarm	7.7-5
7.7.2.3	Plant Control System Interlocks	7.7-5
7.7.2.3.1	Rod Stops	7.7-5
7.7.2.3.2	Automatic Turbine Load Runback	7.7-5
7.7.2.4	Pressurizer Pressure Control	7.7-5
7.7.2.5	Pressurizer Level Control	7.7-6
7.7.2.6	Steam Generator Water Level Control	7.7-6
7.7.2.7	Steam Dump Control	7.7-9
7.7.2.8	In-core Instrumentation	7.7-10
7.7.2.9	Operating Control Stations	7.7-10
7.7.2.10	Plant Alarm and Annunciator Systems	7.7-12
7.7.2.11	Residual Heat Removal Performance Monitoring System	7.7-16

TABLE OF CONTENTS (Continued)

Section	Title	Page
7.7.2.12	Seismic Monitoring Instrumentation	7.7-16
7.7.2.13	Meteorological Monitoring Instrumentation	7.7-17
7.7.3	System Design Evaluation	7.7-17
7.7.3.1	Unit Stability	7.7-17
7.7.3.2	Step Load Changes Without Steam Dump	7.7-17
7.7.3.3	Loading and Unloading	7.7-18
7.7.3.4	Loss of Load With Steam Dump	7.7-18
7.7.3.5	Turbine Generator Trip With Reactor Trip	7.7-18
7.7.3.6	In-core Instrumentation	7.7-19
7.7.3.6.1	Thermocouples	7.7-20
7.7.3.6.2	Moveable Miniature Neutron Flux Detectors	7.7-20
7.7.3.7	Operating Control Systems	7.7-22
7.7.3.7.1	Control Room Availability	7.7-22
7.7.3.7.2	Control Room Evaluation	7.7-22
7.7.3.8	Secondary System Design Evaluation	7.7-22
7.7.4	References for Section 7.7	7.7-23
7.8	ATWS MITIGATION SYSTEM ACTUATION CIRCUITRY (AMSAC)	7.8-1
7.8.1	Description	7.8-1
7.8.1.1	System Description	7.8-1
7.8.1.2	Equipment Description	7.8-1
7.8.1.3	Functional Performance Requirements	7.8-2
7.8.1.4	AMSAC Interlocks	7.8-3
7.8.1.5	Steam Generator Level Sensor Arrangement	7.8-3
7.8.1.6	Turbine Steamline Inlet Pressure Arrangement	7.8-3
7.8.1.7	Trip System	7.8-3
7.8.1.8	Isolation Devices	7.8-3
7.8.1.9	AMSAC Diversity From the Reactor Protection System	7.8-4
7.8.1.10	Power Supply	7.8-4
7.8.1.11	Environmental Variations	7.8-4
7.8.1.12	Setpoints	7.8-4
7.8.2	Analysis	7.8-5
7.8.2.1	Safety Classification/Safety-Related Interface	7.8-5
7.8.2.2	Redundancy	7.8-5
7.8.2.3	Diversity From the Existing Trip System	7.8-5
7.8.2.4	Electrical Independence	7.8-5
7.8.2.5	Physical Separation From the RTS and ESFAS	7.8-6
7.8.2.6	Environmental Qualification	7.8-6
7.8.2.7	Seismic Qualification	7.8-6
7.8.2.8	Test, Maintenance, and Surveillance Quality Assurance	7.8-6
7.8.2.9	Power Supply	7.8-7
7.8.2.10	Testability at Power	7.8-7

TABLE OF CONTENTS (Continued)

Section	Title	Page
7.8.2.11	Inadvertent Actuation	7.8-7
7.8.2.12	Maintenance Bypasses	7.8-7
7.8.2.13	Operating Bypasses	7.8-7
7.8.2.14	Indication of Bypasses	7.8-7
7.8.2.15	Means for Bypassing	7.8-8
7.8.2.16	Completion of Mitigative Actions Once Initiated	7.8-8
7.8.2.17	Manual Initiation	7.8-8
7.8.2.18	Information Readout	7.8-8
7.8.3	Compliance With Standards and Design Criteria	7.8-8
7.9	PHYSICAL SEPARATION AND ELECTRICAL ISOLATION	7.9-1
7.9.1	Physical Separation	7.9-1
7.9.2	Electrical Isolation	7.9-3
7.10	SAFETY PARAMETER DISPLAY SYSTEM (SPDS)	7.10-1
7.10.1	Functional Description	7.10-1
7.10.2	System Description	7.10-1
7.10.3	Computer Subsystem	7.10-2
7.10.4	Display Subsystem	7.10-2
7.10.4.1	Top Level Display	7.10-2
7.10.4.2	Second Level Display	7.10-2
7.10.4.3	Third Level Display	7.10-3
7.10.4.4	Fourth Level Display	7.10-3
7.10.5	Human Factors	7.10-3
7.10.6	Isolation	7.10-3
7.10.7	Parameter Selection	7.10-3
7.10.8	Data Validation	7.10-4
7.10.9	References	7.10-4
7A	Program Element Descriptions Resulting From the Implementation of the May 6, 1983 Order	7A-1
7A.1	Introduction	7A-1
7A.2	Training	7A-1
7A.3	Procurement and Management	7A-2
7A.4	Operating Procedures	7A-3
7A.5	Maintenance and Surveillance	7A-3
7A.6	Control of Vendor Information	7A-4

LIST OF TABLES

Table	Title
7.2-1	List of Reactor Trips, Engineered Safety Features, Containment and Steam Line Isolation and Auxiliary Feedwater
7.2-2	Interlock Circuits
7.2-3	Legend of Analog Symbols
7.2-4	Salem Unit 1 – Reactor Trip System Instrument Response Times: THE INFORMATION CONTAINED IN THIS TABLE WAS RELOCATED TO THE SALEM TECHNICAL REQUIREMENTS MANUAL
7.2-5	Salem Unit 2 – Reactor Trip System Instrument Response Times: THE INFORMATION CONTAINED IN THIS TABLE WAS RELOCATED TO THE SALEM TECHNICAL REQUIREMENTS MANUAL
7.3-1	Process Instrumentation for RPS and ESF Actuation
7.3-2	Post-Accident Equipment (Inside Containment) Operational and Testing Requirements
7.3-3	Postulated Submerged Electrical Components in the Containment Following a LOCA
7.3-4	Safety Evaluation – Electrical Components and Circuits That are Affected by the Flooding of Components Within the Containment During Post-LOCA Conditions
7.3-5	Safety Evaluation – Submerged Electrical Components in the Containment During Post-LOCA Conditions
7.3-6	Safety Evaluation – Electrical Components and Circuits That are Affected by the Flooding of Components Within The Containment During Post-LOCA Conditions
7.3-7	Safety Evaluation – Electrical Components and Circuits That are Affected by the Flooding of Components Within the Containment During Post-LOCA Conditions – Junction/Terminal Boxes
7.3-8	Salem Unit 1 – Engineered Safety Features Response Times: THE INFORMATION CONTAINED IN THIS TABLE WAS RELOCATED TO THE SALEM TECHNICAL REQUIREMENTS MANUAL
7.3-9	Salem Unit 2 – Engineered Safety Features Response Times: THE INFORMATION CONTAINED IN THIS TABLE WAS RELOCATED TO THE SALEM TECHNICAL REQUIREMENTS MANUAL
7.5-1	Main Control Room Indicators and/or Recorders Available to the Operator
7.5-2	Main Control Room Indicators and/or Recorders Available to the Operator to Monitor Significant Plant Parameters During Normal Operation
7.5-3	Index Type "A" Variables
7.5-4	Summary of Instrumentation Compliance with Regulatory Guide 1.97
7.5-5	Justification for Nonconformance to Regulatory Guide 1.97
7.7-1	Rod Stops
7.7-2	Overhead Annunciator Groupings
7.7-3	Deleted
7.7-4	Deleted

LIST OF TABLES (Continued)

Table	Title
7.7-5	Deleted
7.7-6	Deleted
7.10-1	Safety Parameter Display System Parameters
7.10-2	Comparisons of Safety Functions with NUREG-0737 Supplement 1
7.10-3	Critical Safety Functions Associated with Barriers

LIST OF FIGURES

Figure	Title
7.2-1	Illustration of Overpower and Overtemperature ΔT Setpoints (ΔT vs T_{avg})
7.2-2	Deleted: Refer to Plant Drawing 221051
7.2-3	Setpoint Reduction Function for Overpower and Overtemperature ΔT Trips
7.2-4	Pressurizer Pressure Control and Protection System
7.2-5	Pressurizer Level Control and Protection System
7.2-6	Pressurizer Sealed Reference Leg Level System
7.2-7	Steam Generator Level Control and Protection System
7.3-1	Containment Pressure Instrumentation
7.3-2	Typical MOV 230 V Power Lockout
7.3-3	Typical MOV Control Power Lockout without Interposing Relay
7.3-4	Typical MOV Control Power Lockout with Interposing Relay
7.6-1	Accumulator Discharge Valves – Status Monitoring
7.7-1	Block Diagram of Reactor Control System
7.7-2	Control Bank Rod Insertion Monitor
7.7-3	Rod Deviation Comparator
7.7-4	In-Core Instrumentation Details
7.7-5	Schematic Arrangement of In-Core Flux Detectors (Plan View)
7.7-6	Typical Arrangement of Movable Miniature Neutron Flux Detector System (Elevation)
7.7-7	Advanced Digital Feedwater Control System Input Signal Validation Scheme
7.7-8	Advanced Digital Feedwater Control System Feedwater Control Functional Logic with Algorithms
7.7-9	Advanced Digital Feedwater Control System Feedwater Control Valve Linearization Functional Block Diagram

7 INSTRUMENTATION AND CONTROLS

7.1 Introduction

Instrumentation and Control Systems provide the reactor operator with the required information and control capability to operate the station in a safe and efficient manner. Where safety functions are involved, logic circuitry and actuators are provided to execute equipment actions without operator action.

Instrumentation and Control Systems are broadly classified as being either Safety-Related Systems or Control Systems. The nuclear instrumentation (1) and engineered safety features' circuits are discussed in separate parts of this section. Other specific design features or topics also separately discussed are: in-core instrumentation, operating control stations and engineered safeguards sequence control. Controls and electrical drawings for safety-related equipment can be found in Reference 2.

Instrumentation and controls are provided to monitor and maintain all operationally important reactor operating parameters such as neutron flux, system pressures, flow rates, temperatures, levels, and control rod positions within prescribed operating ranges. The quantities and types of instrumentation provided are adequate for safe and orderly operation of all systems and processes over the full operating range of the plant.

Process variables which are required on a continuous basis for the startup, power operation, and shutdown of the station are indicated in, recorded in, and controlled as necessary from the Control Room. The operating staff is cognizant and in control of all test, maintenance, and calibration work and can fully assess all abnormal plant conditions knowing the extent to which specific and related operating tasks are in process.

Control System failure analyses have been conducted for Unit 2 and were reported to the Nuclear Regulatory Commission on June 2, 1982, in a report entitled, "Salem Generating Station, Unit 2, Control Systems Failure Analysis." The systems reviewed were 1) Steam Dump, 2) Ex-core Nuclear Instrumentation, 3) Pressurizer Pressure and Level Control, 4) Feedwater Control and 5) Rod Control. The systems were evaluated for: 1) break of common instrument lines, 2) loss of power to all components powered from a single source, and 3) break of any single instrument line. It was concluded that the consequences of single control system failures are adequately bounded by the accident analyses of Section 15.

7.1.1 Identification of Safety-Related Systems

7.1.1.1 Reactor Trip Systems

The Reactor Trip System consists of equipment which initiates reactor trip or activates engineered safety features. All equipment from sensors to actuating devices is considered a part of the protective system. The reactor trip breakers and the undervoltage attachment are safety related. Engineered safety features are discussed in Section 7.3.

Design criteria permit maximum effective use of process measurements both for control and protection functions, thus enhancing the capability to provide an adequate system to deal with the majority of common-mode failures as well as to provide redundancy for critical control functions. The design approach provides for monitoring of numerous system variables by different means, i.e., system diversity. This diversity has been evaluated for a wide variety of postulated accidents (3).

7.1.1.2 Fission Process Monitors and Controls

Criterion: Means shall be provided for monitoring or otherwise measuring and maintaining control over the fission process throughout core life under all conditions that can reasonably be anticipated to cause variations in reactivity of the core.

The Nuclear Instrumentation System described in Section 7.2 safeguards the reactor by monitoring the neutron flux and generating appropriate trips and alarms for various phases of reactor operating and shutdown conditions. It also provides indication of reactor status during startup and power operation.

A comprehensive discussion of the Nuclear Instrumentation System, covering design bases and a detailed description of the system, can be found in Reference 1.

7.1.1.3 Plant Comparison

Salem Generating Station's Protection and Engineered Safety Features Actuation Systems are functionally identical to those in the D. C. Cook Plant.

Both stations have solid state logic protection systems and extended testability of engineered safety features actuation circuitry.

Both stations have incorporated the power range fast flux rate trip with the corresponding deletion of the automatic rod withdrawal block on indication of rod drop.

The design of both systems conforms to IEEE Standard 279-1971 and the General Design Criteria.

7.1.2 Identification of Safety Criteria

7.1.2.1 Design Bases

Criterion: Core protection systems, together with associated equipment, shall be designed to prevent or to suppress conditions that could result in exceeding acceptable fuel damage limits.

If the Reactor Trip System receives signals which are indicative of an approach to unsafe operating conditions, the system actuates alarms, prevents control rod withdrawal, initiates load cutback, and/or opens the reactor trip breakers.

The basic reactor operating philosophy is to define an allowable region of power, pressure, and coolant temperature conditions. This allowable range is defined by the primary tripping functions: The overpower ΔT trip, the overtemperature ΔT trip and the nuclear overpower trip. The operating region below these trip settings is designed so that no combination of power, temperatures, and pressure could result in departure from nucleate boiling ratio less than 1.3 for any credible operational transient with all reactor coolant pumps in operation. Tripping functions, in addition to those stated above, are provided to back up the primary tripping functions for specific abnormal conditions.

Rod stops from nuclear overpower, overpower ΔT, and overtemperature ΔT deviation are provided to prevent abnormal power conditions which could result from excessive control rod withdrawal initiated by a malfunction of the Reactor Control System or by operator violation of administrative procedures.

7.1.2.2 Independence of Safety-Related Systems

7.1.2.2.1 Redundancy and Independence of Safety-Related Systems

Criterion: Redundancy and independence designed into safety-related systems shall be sufficient to assure that no single failure or removal from service of any component or channel of such a system will result in loss of the protection function. The redundancy provided shall include, as a minimum, two channels of protection for each protection function to be served.

The Reactor Trip System is designed so that loss of voltage in a channel will result in a signal calling for a trip, except for reactor coolant pump bus undervoltage, underfrequency, and auto shunt trip which require dc voltage to actuate. The Reactor Trip System design combines redundant sensors and channel independence with coincident trip philosophy so that a safe and reliable system is provided in which a single failure will not violate reactor protection criteria.

The design philosophy for the Reactor Protection and Control Systems is to make maximum use, for both protection and control functions, of a wide range of measurements. The Reactor Protection and Control Systems are separate and identifiable. The design approach permits not only redundancy of control, providing its own desirable increment to overall plant safety, but also provides a protection system which continuously monitors numerous system variables by different means; i.e., protection system diversity.

The extent of protection system diversity has been evaluated for a wide variety of postulated accidents (3). Generally, two or more diverse protective functions would terminate an accident before intolerable consequences could occur.

The Reactor Protection System is independent of the Control System, although the Control System is dependent upon signals derived from the Reactor Protection System through isolation amplifiers. The design approach is to make maximum and thereby most efficient use, for both control and protection purposes, of all measurements of plant variables.

In the Reactor Protection System, two reactor trip breakers are actuated by two separate logic matrices which interrupt power to the rod cluster control assembly drive mechanisms. The breakers are connected in series with the power supply so that opening either breaker interrupts power to all full length rod drive mechanisms permitting the rods to free fall into the core.

Further detail on redundancy is provided through the description of the respective systems covered by the various subsections within this Section. The power supply for the Protection Systems is discussed in Section 8.

7.1.2.2.2 Protection Against Multiple Disability for Safety-Related Systems

Criterion: The effects of adverse conditions to which redundant channels or Protection Systems might be exposed in common, either under normal conditions or those of an accident, do not result in loss of the protection function or shall be tolerable on some other basis.

Separation of redundant analog protection channels originates at the process sensors and continues through the wiring route and containment penetrations to the analog protection racks. Physical separation is used to achieve separation of redundant transmitters. Separation of wiring is achieved using separate wireways, cable trays, conduit runs, and containment penetrations for each redundant channel. Redundant analog equipment is separated by locating modules in different protection rack sets. Each redundant protection channel set is energized from a separate instrument bus, which can be energized by the standby ac power system.

7.1.2.2.3 Demonstration of Functional Operability of Safety-Related Systems

Criterion: Means shall be included for suitable testing of the active components of protection systems while the reactor is in operation to determine if failure or loss of redundancy has occurred.

The signal conditioning equipment of each protection channel in service at power is capable of being calibrated and tested independently by simulated analog input signals to verify its operation without tripping the reactor. The testing scheme includes checking through the trip logic to the trip breakers. Thus, the operability of each trip channel can be determined conveniently and without ambiguity. Functional operation of the power sources for the Protection System is discussed in Section 8.

7.1.2.2.4 Protection System Failure Analysis Design

Criterion: The protection systems shall be designed to fail into a safe state or into a state established as tolerable on a defined basis if conditions such as disconnection of the system, loss of energy (e.g., electrical power, instrument air), or adverse environments (e.g., extreme heat or cold, fire, steam, or water) are experienced.

Reactor trip channels are generally designed on the "de-energize to operate" principle; a loss of power causes a channel to go into its trip mode. Exceptions to this case are the reactor coolant pump bus undervoltage and underfrequency trips, and the automatic reactor shunt trip feature

which require dc voltage to actuate. All safety-related air operated valves are spring loaded to move to the preferred position on loss of instrument air.

Reactor trip is implemented by simultaneously interrupting power to the magnetic latch mechanisms on all drives allowing the rods to insert by free fall. The protection system is thus inherently safe in the event of a loss of power. This equipment is selected to withstand the most adverse environmental conditions to which it will be subjected; this would also include post-accident conditions within the containment, if the equipment is required to operate in the post-accident environment.

7.1.2.2.5 Reactivity Control Systems' Malfunctions

Criterion: The Reactor Trip Systems shall be capable of protecting against any single malfunction of the Reactivity Control Systems, such as unplanned continuous withdrawal (not ejection or dropout) of a control rod, by limiting reactivity transients to avoid exceeding acceptable fuel damage limits.

Reactor shutdown with rods is completely independent of the normal control functions since the trip breakers interrupt the power to the rod mechanisms regardless of existing control signals. Effects of continuous withdrawal of a rod and of deboration are described in Section 15.

7.1.2.3 Missile Protection

Criterion: Adequate protection for those engineered safety features, the failure of which would result in undue risk to the health and safety of the public, shall be provided against dynamic effects and missiles that might result from plant equipment failures.

The applicable portions of the missile protection criteria as stated in Section 1.3 apply to Class I equipment in this Section.

Several criteria related to all Instrumentation and Control Systems but more specific to other plant features or systems are discussed in other sections, as listed:

Criterion	Discussion
Suppression of Power Oscillations	Section 3
Reactor Core Design	Section 3
Quality Standards	Section 1
Performance Standards	Section 1
Fire Protection	Section 9
Missile Protection	Section 5
Emergency Power	Section 8

7.1.2.4 Periodic Testing of the Protection Systems (IEEE Standard 338-1971)

IEEE Standard 338-1971, "IEEE Trial-Use Criteria for the Periodic Testing of Nuclear Power Generating Station Protection Systems," was used as a guide in developing the periodic testing program details for Salem.

1. The response time specified in Paragraph 4.1 of IEEE Standard 338-1971 is not checked periodically as is the setpoint accuracy. The response time of Protection System instruments is checked during preoperational testing and after replacement of any component affecting the response time. Response times are checked during refueling outages.

2. The reliability goals specified in Paragraph 4.2 of IEEE Standard 338-1971 are not applicable since the test frequencies are dictated in the Technical Specifications.

3. The periodic test frequency discussed in Paragraph 5.2 of IEEE Standard 338-1971, and specified in the Technical Specifications, is conservatively selected to assure that equipment associated with protection functions has not drifted beyond its minimum performance requirements.

4. The test interval discussed in Paragraph 5.2 of IEEE Standard 338-1971, is developed on past operating experience and analytical methods, and will be modified if necessary to assure that system and subsystem protection is reliably provided.

7.1.2.5 Conformance to IEEE Standard 344-1971

The Reactor Protection System, engineered safety feature circuits, and the Emergency Power System have been designed to assure that these systems do not lose their capability to perform the required functions in the event of a design basis earthquake. Such equipment is designed Class I as defined in Section C.1. A listing for the general category of Class I items is given in Section C.2.

The Protection System has been designed and qualified to assure its capability to initiate a protective action during the design basis earthquake. The engineered safety feature circuits have been designed and qualified to assure their capability in performing the required functions during post-accident operation. There may be deformation of the equipment; however, functional capability must be maintained. Equipment suppliers have been given the seismic design requirements, and the ability of such equipment to perform its required functions has been verified either by analysis or by testing. Typical Protection System and Engineered Safety Features System equipment are subjected to type tests under simulated seismic motion and/or dynamic mathematical analysis to demonstrate ability to function.

Type testing has been done on this equipment by using conservatively large accelerations and applicable frequencies. This testing conformed to the guidelines set forth in IEEE Standard 344-1971, "IEEE Guide for Seismic Qualification of Class I Electrical Equipment for Nuclear Power Generating Stations."

References 4, 5, 6, and 7 provide the seismic evaluation of safety-related equipment. The results show that there were no electrical irregularities that would leave the plant in an unsafe condition even though some trips were initiated.

Table 3.10-1 contains all the safety-related electrical equipment that requires seismic qualification.

7.1.2.6 Conformance and Exceptions to IEEE Standard 323-1971

The safety-related equipment is type tested to substantiate the adequacy of design. This is the preferred method as indicated in IEEE Standard 323-1971, "IEEE Trial-Use Standard Guide for Qualifying Class I Electric Equipment for Nuclear Power Generating Stations. "Type tests already performed (References 4, 8, 10) in accordance with criteria standards established at the time of the construction permit, may not conform to the format guidelines set forth in IEEE Standard 323-1971.

7.1.2.7 Conformance to IEEE Standard 336-1971

Installation, inspection, and testing activities for instrumentation and electric equipment are in accordance with IEEE Standard 336-1971, "IEEE Standard Installation, Inspection and Testing Requirements for Instrumentation and Electric Equipment During the Construction of Nuclear Power Generating Stations." The overall quality assurance program is described in Section 17.

7.1.2.8 Conformance to 10CFR50.62

The AMSAC conforms to the requirements of 10CFR50.62 as discussed in Section 7.8.

7.1.2.9 Instrumentation Piping/Tubing Code Reconciliation Associated With Unit 2 SGR

Instrumentation piping/tubing fabrication, installation, and examination involved in installing the Unit 2 Steam Generators utilized ASME Section XI (1998 Edition with 2000 Agenda) and ASME Section III, Subsection NC and NCA (1995 Edition through 1996 Addenda). Both of these later codes are NRC-endorsed per 10CFR50.55a and were reconciled to the original construction codes.

7.1.3 Control Room Design Review

A preliminary design review assessment of the Salem Unit 2 Control Room was undertaken in the spring of 1980 by Public Service Electric & Gas in conjunction with human factors personnel from Essex Corporation. It was concluded in the preliminary review "the design of the Salem 2 Control Room, which was repeatedly developed through the use of mockups and operator walk-throughs, evidences a high level of concern for the capabilities and limitations of the human operator, with some notable exceptions." The authors cautioned that the human engineering discrepancies and conclusions were tentative pending further evaluation and analysis. A detailed control room design review (DCRDR) (11) was subsequently undertaken. The DCRDR was performed for Units 1 and 2 in accordance with the intent of NUREG-0700 (12). The DCRDR process was divided into the following major steps:

1. Operating Experience Review
2. Control Room Inventory
3. Control Room Survey
4. System Function Review and Task Analysis
5. Verification of Task Performance Capabilities
6. Validation of Control Room Functions and Integrated Performance Capabilities

Design review team members assessed the identified and prioritized human engineering discrepancies (HEDs) and recommended corrective actions, if applicable, for the resolution of each. Recommendations for HED resolution were developed for all significant HEDs using the resources of the DCRDR team and other specialists (e.g., Plant Engineering and Operating Departments). These recommendations took into account the impact of the correction on operating effectiveness, system safety, acceptabi1ity of design, and consistency with present Control Room characteristics.

A list of all HEDs requiring plant changes appears in Section 3.1.1 of the DCRDR report (11). All HEDs identified during the review are listed in Volume 2 of the same report.

A re-evaluation of human factors issues affected by the changes in the general arrangement of the Control Room(s) undertaken in 1996 has been conducted. The human factors issues affected by the changes include lighting, control room colors, sound propagation, task analyses, relocation of communications devices and information systems, adequacy of storage locations and traffic flow within the control room. The results of this review are contained in Reference 13.

7.1.4 References for Section 7.1

1. Lipchak, J. B. and Stokes, R. A., "Nuclear Instrumentation System," WCAP-7380-L (Proprietary) December 1970 and WCAP-7669 (Nonproprietary), April 1971.

2. "Controls and Electrical Drawings for Safety-Related Equipment," Volumes 1 through 4, Salem Nuclear Generating Station, Units 1 and 2, Public Service Electric and Gas Company, July 1973.

3. Burnett, T. W. T., "Reactor Protection System Diversity in Westinghouse PWRs," WCAP-7306, April 1969.

4. Vogeding, E. L., "Seismic Testing of Electrical and Control Equipment," WCAP-7397-L (Proprietary), January 1970 and WCAP-7817 (Nonproprietary), December 1971.

5. Vogeding, E. L., "Seismic Testing of Electrical and Control Equipment (WCID Process Control Equipment)," WCAP-7397-L, Supplement 1 (Proprietary), January 1971 and WCAP-7817, Supplement 1 (Nonproprietary), December 1971.

6. Potochnik, L. M., "Seismic Testing of Electrical and Control Equipment (Low Seismic Plants)," WCAP-7817, Supplement 2, December 1971.

7. Vogeding, E. L., "Seismic Testing and Electric and Control Equipment (Westinghouse Solid State Protection System) (Low Seismic Plants)," WCAP-7817, Supplement 3, December 1971.

8. "Test Report - Nuclear Instrumentation System Isolation Amplifier," WCAP-7819, Revision 1, January 1972.

9. Deleted

10. Locante, J., "Environmental Testing of Engineered Safety Features Related Equipment (NSSS - Standard Scope)," WCAP-7410-L, Volume 1 (Proprietary), December 1970 and WCAP-7744, Volume 1 (Nonproprietary), August 1971.

11. "Public Service Electric & Gas Co.," Salem Generating Station, Units 1 and 2, Detailed Control Room Design Review, Volumes 1 and 2, December 1983.

12. USNRC, NUREG-0700, "Guidelines for Control Room Design Reviews."

13. "Public Service Electric & Gas Co.," Salem Generating Station, Units 1 and 2, Supplemental Control Room Human Factors Design Review in Support of DCP 1EC-3360.

7.2.1 Description

7.2.1.1 System Description

The Reactor Trip System consists of equipment designed to cause or initiate engineered safety features. All equipment from sensors to the trip breakers or initiation circuits of engineered safety features are part of the Reactor Trip System. Engineered safety features are discussed in Section 7.3.

Design criteria for this system (refer to Section 7.1) permit maximum effective use of process measurements both for control and protection functions, thus enhancing the capability to provide an adequate system to deal with the majority of common-mode failures as well as to provide redundancy for critical control functions. The design approach provides system diversity which has been evaluated for a wide variety of postulated accidents (1).

The Reactor Trip System consists of an aggregate lineup of the following systems. System descriptions may be found throughout this section and in the associated references:

Nuclear Instrumentation System (2)

Process Control System

Solid State Protection System (3, and 7-10)

Figure 7.2-1 illustrates core limits and shows the maximum trip points which are used for the protection system. The solid lines indicate a typical locus of departure from nucleate boiling ratio (DNBR) = 1.30 at four pressures and the dashed lines indicate maximum permissible trip points for the overtemperature ΔT reactor trip. Actual setpoints (the safety limits are given in the Technical Specifications) are lower to allow for measurement and instrumentation errors. The overpower ΔT reactor trip limits the maximum core power independent of DNBR.

Adequate margins exist between the maximum nominal steady state operating point (which includes allowance for temperature, calorimetric, and pressure errors) and required trip points to preclude a spurious trip during design transients.

7.2.1.2 Nuclear Instrumentation

The Nuclear Instrumentation System is an integral part of the Reactor Trip System as described in these sections.

The Nuclear Instrumentation System uses information from three separate types of instrumentation channels to provide three discrete protection levels. Each range of instrumentation (source, intermediate, and power) provides the necessary overpower reactor trip protection required during operation in that range. The overlap of instrument ranges provides reliable continuous protection beginning with source level through the intermediate and low power level. As the reactor power increases, the overpower protection level is increased by administrative procedures after satisfactory higher range instrumentation operation is obtained. Automatic reset to more restrictive trip protection is provided when reducing power.

Various types of neutron detectors, with appropriate solid-state electronic circuitry, are used to monitor the leakage neutron flux from a completely shutdown condition to 120 percent of full power. The power range channels are capable of recording overpower excursions up to 200 percent of full power.

The neutron flux covers a wide range between these extremes. Therefore, monitoring with several ranges of instrumentation is necessary. The lowest range (source range) covers six decades of leakage neutron flux. The next range (intermediate range) covers eight decades. Detectors and instrumentation are chosen to provide overlap between the higher portion of the source range and the lower portion of the intermediate range. The highest range of instrumentation (power range) covers approximately two decades of the total instrumentation range. This is a linear range that overlaps with the higher portion of the intermediate range.

The system described above provides Control Room indication and recording of signals proportional to reactor neutron flux during core loading, shutdown, startup and power operation, as well as during subsequent refueling. Startup rate indication for the source and intermediate range channels is provided at the control board. Reactor trip and rod stop control and alarm signals are transmitted to the Reactor Control and Protection System for automatic plant control.

The Salem design used the Ion-Chamber Current Recorders (NR-41 through NR-44) to record the upper and lower neutron flux of the same detector instead of the upper and lower neutron flux of the diagonally opposite detectors.

A block diagram of the Reactor Trip System showing various reactor trip functions and interlocks is shown on Plant Drawing 221051.

7.2.1.3 Principles of Design

The identification of applicable safety criteria is covered in Section 7.1. The Reactor Trip System is designed in accordance with IEEE Standard 279-1971. Detailed descriptions of the implementation of these principles are presented here in Sections 7.2 and 7.5.

7.2.1.4 Electrical Isolation

The design criterion used to assure electrical isolation is that no analog signal which is required for initiation of reactor protection or engineered safety feature actuation is allowed to leave a set of protection channels. Where protection signal intelligence is required for other than protection functions an isolation amplifier (part of the protection set) is used to transmit the intelligence. The isolation amplifier prevents the perturbation of the protection channel signal (input) due to any disturbance of the isolated signal (output) which normally could occur near any termination of the output wiring external to the protection racks. A description of the nuclear instrumentation isolation amplifiers is given in Reference 4. A description of the Process Control System isolating device is given in Reference 5.

Isolation of the reactor protection and engineered safety feature signals from control signals has been demonstrated. Tests have confirmed the adequacy of isolation devices in Protection System designs.

7.2.1.5 Protection System Identification

All nonrack-mounted protective equipment and components are provided with an identification tag or name plate. Small electrical components such as relays have name plates on the enclosure which houses them. All cables are numbered with identification tags. These numbers are included in the cable control report which specified cable routing.

For protection racks which house the protection rack mounted equipment, a color coded nameplate on the rack is used to differentiate between protective and non-protective sets. This provides immediate and unambiguous identification of protection sets. The color coding of the nameplates is as follows:

Protection Set I - Green with white lettering

Protection Set II - Gray with white lettering

Protection Set III - Blue with white lettering

Protection Set IV - Cocoa with white lettering

7.2.1.6 Manual Actuation

Means are provided for manual initiation of Protective System action. Failure in the automatic system does not prevent the manual actuation of protective functions. Manual actuation is designed to require the operation of a minimum of equipment.

7.2.1.7 Channel Bypass or Removal from Operation

The system is designed to permit any one analog channel to be maintained, tested, or calibrated during power operation without system trip. (Note: This does not include such backup trips as manual trip and reactor coolant pump breakers open trip.) During such operation the active parts of the system continue to meet the single failure criterion, since the channel under test is either tripped or makes use of superimposed test signals which do not negate the process signal.

EXCEPTIONS: 1. "One-out-of-two" systems are permitted to violate the single failure criterion during channel bypass provided that acceptable reliability of operation can be otherwise demonstrated and bypass time interval is short. 2. Containment spray actuation channels are tested by bypassing or negating the channel under test. This is acceptable since there are four channels, and the two-out-of-four trip logic reduces to two-out-of-three during the test.

7.2.1.8 Capability for Test and Calibration

The bistable portions of the Protective System (e.g., switches, on-off controllers, etc.) provide trip signals only after signals from analog portions of the system reach preset values. Capability is provided for calibrating and testing the performance of the bistable portion of protective channels and various combinations of the logic networks during reactor operation.

The analog portion of a protective channel (e.g., sensor and amplifier) provides an analog signal of the reactor or plant parameter. Any of the following methods for checking the analog portion of a protective channel during reactor operation are used:

1. Varying the monitored parameter
2. Introducing and varying a substitute transmitter signal
3. Cross-checking between identical channels or between channels which bear a known relationship to each other and which have readouts available

The design provides for administrative control for the purpose of manually bypassing channels for test and calibrating purposes if required.

The design provides for administrative control of access to trip settings, module calibration adjustments, test points, and signal injection points.

7.2.1.9 Information Readout and Indication of Bypass

The Protective System provides the operator with complete information pertinent to system status and safety.

Indication is provided in the Control Room if some part of the system has been administratively bypassed or taken out of service.

Trips are indicated and identified down to the channel level.

7.2.1.10 Vital Protective Functions and Functional Requirements

The Reactor Protection System in conjunction with inherent plant characteristics is designed to prevent anticipated abnormal conditions from exceeding limits established in Sections 3 and 4.

Completion of Protective Action (Interlock)

Where operating requirements necessitate automatic or manual bypass of a protective function, the design is such that the bypass is removed automatically whenever permissive conditions are not met. Devices used to achieve automatic removal of the bypass of a protective function are part of the Protective System and are designed in accordance with the criteria of this section.

The Protective Systems are so designed that, once initiated, a protective action goes to completion. Return to normal operation requires action by the operator.

Multiple Trip Settings

For monitoring nuclear flux, multiple trip settings are used. When a more restrictive trip setting becomes necessary to provide adequate protection for a particular mode of operation or set of operating conditions, the Protective System as designed provides positive assurance that the

more restrictive trip setting is used. The devices used to prevent improper use of less restrictive trip settings are considered a part of the Protective System and are designed in accordance with the criteria presented in this section.

Protective Actions

The Reactor Trip System automatically trips the reactor. Trip limits for these conditions are established during the final design.

For anticipated abnormal conditions, Protective Systems, in conjunction with inherent characteristics and engineered safeguards, are designed to assure that limits for energy release to the containment and for radiation exposure (as in 10CFR50.67) are not exceeded.

Indication

Transmitted analog signals (flow, pressure, temperature, etc.) which can lead to a reactor trip are either indicated or recorded for every channel.

All nuclear flux power range currents (top detector, bottom detector, and algebraic difference and average of bottom and top detector currents) are indicated and/or recorded.

Alarms and Annunciators

Alarms and annunciators are also used to alert the operator of deviations from normal operating conditions so that he may take corrective action to avoid a reactor trip. Further actuation of any abnormal rod stop or trip of any reactor trip channel will actuate an alarm.

Alarms and/or annunciators also alert the operator when a protection channel is placed in the test condition. There is no audible or visual alarm associated with the Reactor Nuclear Instrumentation System panel doors. Improper opening of these doors is prevented by administrative control. Interlocks are provided on the doors of each of the process control analog racks, in all four protection sets, which actuate an alarm in the control room if any door in any protection set is opened.

7.2.1.11 Operating Environment

The protective channels are designed to perform their functions when subjected to adverse environmental conditions. See Section 7.3.1.2.2 for those portions of the Protective System that must operate in a post-accident environment.

7.2.2 Design Basis Information

7.2.2.1 Separation of Redundant Instrumentation and Controls

The Reactor Protection System uses four separate and independent channels of instrumentation to provide inputs to two separate logic systems. The design of the Reactor Protection System incorporates physical and electrical separation of the four channels from the

sensing element to the logic systems. The logic systems' outputs are also separated to preserve the independence of redundant functions.

Redundant instrumentation and control cables are routed through separate containment penetrations to maintain independence.

The four independent channel signals are wired to four separate sets of analog protection racks located in the vicinity of the plant Control Room. These racks contain the isolation amplifiers which reproduce the sensed signal for use in the plant process control systems.

7.2.2.2 Design Basis for Protection Circuits

Both reactor trip and engineered safety features actuation functions are performed by the Solid State Protection System. Non-protective control type functions are also provided of which several can be classified as equipment protection.

The two redundant reactor trip logic channels are physically separated and electrically isolated from one another. The Reactor Protection System is comprised of identifiable channels which are physically, electrically, and functionally separated and isolated from one another. For additional information on this topic, see References 3, and 7-10.

The ac power feeds to the Solid State Logic System are in accordance with the split-bus concept shown on Figure 22 of WCAP-7488-L. The exceptions to the system depicted on Figure 22 with respect to Salem's configuration are: 1) the fuse in series to the DC power supplies via a filter are not in series with the filter. The DC power supplies are powered directly from the AC vital bus feeds. The fuse is in series with the input relays. 2) In Train A, vital instrument Buses I and IV (instead of Buses I and II) provide power to the DC power supplies while in Train B, Buses II and III (instead of Buses III and IV) provide power to the DC power supplies. 3) In Train B, Bus II provides power to the Slave Relays (instead of Bus IV). Refer to Plant Drawing 211370 for the 115 VAC system.

The electrical supply and control conductors for redundant or backup circuits of the station have such physical separation as is required to assure that no single credible event will prevent operation of the associated function by reason of electrical conductor damage. Critical circuits and functions include power, control, and analog instrumentation associated with the operation of Reactor Protection, Engineered Safeguards, Reactor Shutdown, and Residual Heat Removal Systems. Credible events include, but are not limited to, the effects of short circuits, pipe rupture, missiles, etc.

General

1. Cables of redundant or backup circuits are run in separate conduits, cable trays, ducts, penetrations, etc.

2. Control and instrumentation cables are not placed in trays with cables operating above 250 V.

3. Low level instrumentation cables are not routed in cable trays containing power or control cables unless a barrier is provided. Instrumentation cables are shielded.

4. Cables are clearly identified at the terminations as being safety-related and to what separation group they belong.

Specific Systems

1. Reactor Trip System

   a. Separate routing is maintained for the four basic protection channel analog sensing signals, bistable output signals, and power supplies for such systems.

   b. Separate routing of the two reactor trip trains (logic matrix outputs) is maintained.

2. Engineered Safeguards System

   a. Separate routing is maintained for the four basic safeguards analog sensing signals, bistable output signals, and power supplies for such systems.

   b. Separate routing is also provided for the automatic actuation, control, and power circuits to retain the redundancy of the multiple "train" concept provided in the system design and power supplies.

3. Shutdown Systems - Separate routing of control and power circuits associated with boric acid injection capability to retain the redundancies provided in the system design and power supplies is provided.

4. Residual Heat Removal System - Separate routing of control and power circuits associated with residual heat removal capability to retain the redundancies of system design and power supplies is provided.

5. Auxiliary Feedwater System - Separate routing of control and power circuits associated with auxiliary feedwater capability to retain the redundancies of system design and power supplies is provided.

6. Reactor Protection System - Analog circuits, Paragraph 1a, and Engineered Safeguards System analog circuits, Paragraph 2a, may be routed in the same wireways provided circuits have the same characteristics such as power supply and channel set identity (I, II, III, or IV).

7. Power and Control - Conductors for the Engineered Safeguards Systems, Paragraph 2b; Shutdown Systems, Paragraph 3; Residual Heat Removal System, Paragraph 4; and Auxiliary Feedwater System, Paragraph 5, may be routed in the same wireways provided circuits have the same characteristics, such as train or power supply.

Power Sources

These separation criteria also apply to the power supplies to the separate load centers and buses distributing power to redundant components and to the control of these supplies.

Protective System Independence

The Protective System is designed to be independent of the status of the Control System, plant data logging computer, indicators, recorders, and plant annunciators. However, these systems and monitors derive signals from the Protective Systems through isolation amplifiers which are part of the Protective Systems. The isolation amplifiers prevent any perturbation of the protection signal (input) due to disturbances of the isolated signal (output) which could occur near any termination of the output wiring external to the protection and safeguards racks. A detailed discussion of the isolation amplifier is given in References 4 and 5 for Unit 1.

Reactor Trip Signal Testing

Provisions are made, for process variables, to manually place the output of the bistable in a tripped condition if required for "at power" testing. Except as noted below, administrative procedure requires that the final element in a trip channel (required during power operation) is placed in the trip mode before that channel is taken out of service for repair or testing, if required, so that the single failure criterion is met by the remaining channels.

In the source and intermediate ranges, where the trip logic is one-out-of-two for each range, bypasses are provided for this testing procedure.

Nuclear instrument power range channels are tested by utilizing a test signal generated from within the power range drawer to test the various reactor protection trips. Required surveillances may be performed by either of the following methods:

1. By superimposing the test signal on the sensor signal so that reactor trip protection is not bypassed, therefore maintaining (2/4) coincident logic during testing, or,

2. By disconnecting the detector signal and utilizing just the drawer test signal, thus reducing the (2/4) trip logic to (2/3) during the short period of the surveillance. Even considering a single failure of a second power range channel in conjunction with a power excursion during the surveillance test period, sufficient power range channels remain to initiate reactor protection to terminate the event.

Containment spray actuation channels are tested by bypassing or negating the channel under test. This is acceptable since there are four channels, and the two-out-of-four trip logic reduces to two-out-of-three during the test.

Provision is made for the insertion of test signals in each analog loop. Verification of the test signal is made by portable instruments at test points specifically provided for this purpose. This enables testing and calibration of meters and bistables. Transmitters and sensors are checked

against each other and against plant read-out equipment when required during normal power operation.

All analog signals which are used to initiate reactor trip or engineered safeguards are indicated or recorded on devices which are not dependent upon the plant computer. In addition, a plant computer program monitors various signals which are derived from process variables used as inputs to the Protection System. The computer inputs are isolated from the Protection System channels.

A manual trip signal is initiated by the Control Room operator depressing either one of two pushbuttons. Since either button will actuate both Train A and Train B logic, the manual trip is not testable at power.

7.2.2.3 Reactor Protection System Testing

The OPERABILITY of the protective and ESF instrumentation systems and interlocks ensure that 1) the associated ESF action and/or reactor trip will be initiated when the parameter monitored by each channel or combination thereof exceeds its setpoint, 2) the specified coincidence logic and sufficient redundancy is maintained to permit a channel to be out of service for testing or maintenance consistent with maintaining an appropriate level of reliability of the Reactor Protection and Engineered Safety Features instrumentation and, 3) sufficient system functional capability is available from diverse parameters.

The OPERABILITY of these systems is required to provide the overall reliability, redundancy and diversity assumed available in the facility design for the protection and mitigation of accident and transient conditions. The integrated operation of each of these systems is consistent with the assumptions used in the accident analyses.

The surveillance test requirements specified for these systems ensure that the overall system functional capability (OPERABILITY) is maintained comparable to the original design standards. The periodic surveillance tests are sufficient to demonstrate this capability. The Surveillance Test Frequency is based on operating experience, equipment reliability, and plant risk. With the adoption of “Risk Informed Method for Control of Surveillance Frequencies” per NEI 04-10, the Surveillance Test frequency requirements have been moved from the Technical Specifications to the Surveillance Frequency Control Program (SFCP) procedures.

Process Analog Protection Channel Testing

For a description of the overlap between the typical analog channel and the corresponding logic circuits, see References 3, and 7-10.

Each protection rack includes a test panel containing those switches, test jacks, and related equipment needed to test the channels contained in the rack. A hinged cover encloses a portion of the test panel. Opening the cover or placing the test-operate switch in the "TEST" position automatically initiates an alarm. These alarms are arranged in rack "sets"; the test panel cover is designed such that it cannot be closed (and the alarm cleared) unless the test signal plugs

(described below) are removed. Closing the test panel cover mechanically returns the test switched to the "OPERATE" position.

Test procedures will require the bistable output relays of the channel under test to be placed in the tripped mode prior to proceeding with the analog channel tests. Placing the bistable trip switch in the tripped mode transfers the bistable output from the logic circuitry and connects it to a proving lamp. This permits the electrical operation of the bistable to be observed and the bistable setpoint relative to the channel analog signal to be verified. Upon completion of the test of the analog channel, the bistable trip switches must be manually reset to their operate mode. Closing the cover of the test panel will not transfer the bistable trip switches from their tripped to their operate position.

Analog channel tests will be accomplished by simulating a process measurement signal, varying the simulated signal over its signal span and checking the correlation of bistable setpoints, channel readouts, and other loop elements with precision portable read-out equipment. Test jacks are provided in the test panel for injection of the simulated process signal into each process analog protection channel. Test points are provided in the channel to facilitate an independent means for precision measurement and correlation of the test signal. This procedure does not require any tool (other than test instruments) nor does it involve in any way the removal of wires in the channel under test. In general, the analog channel circuits are arranged so the channel power supply is loaded and is providing sensing circuit power during channel test. Load capability of the channel power supply is thereby verified by the channel test.

Nuclear Instrumentation Channel Testing

Nuclear Instrumentation System channels are tested by either superimposing the test signal in the actual detector signal or by disconnecting the detector cable and utilizing the drawer test signal only. The output of the bistable is not placed in a tripped condition prior to testing. If the channels are tested by superimposing a signal, then a valid trip signal would then be added to the existing test signal, and thereby cause trip at a somewhat lower percent of actual reactor power. Protection bistable operation is tested by increasing the test signal (level signal) to the bistable trip level and verifying operation at control board alarms and/or at the Nuclear Instrumentation System racks.

A Nuclear Instrumentation System channel which can cause a reactor trip through 1 of 2 protection logic (source or intermediate range) is provided with bypass function which prevents the initiation of a reactor trip from that particular channel during the short period that it is undergoing test. The power range channels do not require bypass of the reactor trip function for test, since the protection logic is 2 of 4. If the detector cable is disconnected during testing the protection logic is 2 of 3. No provision has been made in the channel test circuit for reducing the channel signal level below that signal being received from the Nuclear Instrumentation System detector.

Logic Channel Testing

The Solid State Protection System logic is designed to be capable of testing at power, See References 3, and 7-10.

Reactor trip breaker testing is accomplished as follows: normally, reactor trip breakers 52/RTA and 52/RTB are in service, and bypass breakers 52/BYA and 52/BYB are (withdrawn) out of service. To test reactor trip breaker 52/RTA, as an example, the following is done:

1. Bypass breaker BYA is put into service.

   This act closes switchgear relay 52/BYA. It also interrupts one of the two signals to the Train A "and box" which is necessary to actuate subsequent logic causing turbine trip, feedwater isolation, and safety injection block logic.

2. A simulated trip signal is then applied to Train A only.

   This act deenergizes undervoltage coil 52(UV)/RTA and the automatic shunt trip interposing relay which operates reactor trip breaker 52/RTA. Test pushbuttons are installed to determine and verify each breaker tripping device (shunt coil, undervoltage coil) operated properly.

   The reactor is not tripped because the control rods continue to receive rod drive bus power via switchgears 52/BYA and 52/RTB.

In the event that a real trip signal occurs during the testing of 52/RTA trip breaker, Train B will actuate the reactor trip and the logic following the Train B "and box."

Auxiliary contacts on the bypass breakers are connected into the alarm system of their respective train such that if either train is placed in test while the bypass breaker of the other train is closed, both reactor trip breaker and the bypass breaker will be automatically tripped by the general warning alarm circuits of the Solid State Protection System. The General Warning Alarm System is described in References 3, and 7-10.

7.2.2.4 Primary Power Source

The primary power sources for the Reactor Protection System are described in Section 8. The source of electrical power for the measuring elements and the actuation of circuits in the engineered safety features instrumentation is also from these buses.

7.2.2.5 Protective Actions

Reactor Trip Description

Rapid reactivity shutdown is provided by the insertion of rod cluster control assemblies by free fall. Duplicate series-connected circuit breakers supply all power to the control rod drive mechanisms. The rods must be energized to remain withdrawn from the core. Automatic control rod insertion occurs upon the loss of power to the control rods. The trip breakers are opened by the undervoltage coils and shunt trip coils on both breakers. The undervoltage coils which are normally energized become deenergized by any one of the several trip signals. The shunt trip coil is energized by an interposing relay which is installed in parallel with the undervoltage coils.

The design of the devices providing signals to the circuit breaker undervoltage trip coils is such as to cause these coils to trip the breaker on reactor trip signal.

Certain reactor trip channels are automatically bypassed at low power where they are not required for safety. Nuclear source range and intermediate range trips are specifically provided for protection at low power or subcritical operation, and at higher power operations they are bypassed by manual action in conjunction with permissives.

During power operation, a sufficient amount of rapid shutdown capability in the form of shutdown control rods is administratively maintained by means of the control rod insertion limit monitors. Administrative control requires that all shutdown group rods be in the fully withdrawn position during power operation.

A listing of reactor trips, means of actuation, and the coincident logic requirements may be found in Table 7.2-1 with references to interlocks as listed in Table 7.2-2.

Manual Trip

The manual actuating devices are independent of the automatic trip circuitry, and are not subject to failures which make the automatic circuitry inoperable. Actuating either of two manual trip switches located in the Control Room initiates a reactor trip and a turbine trip.

High Neutron Flux (Power Range) Trips

These circuits trip the reactor when two-out-of-the-four power range channels read above the trip setpoint. There are two independent trip settings: a high and a low setting. The high trip setting provides protection during normal power operation. The low setting, which provides protection during startup, can be manually bypassed when two-out-of-the-four power range channels read above approximately 10 percent of full power (P-10). Three-out-of-the-four channels below 10 percent power automatically reinstates the trip function. The high setting is always active.

High Neutron Flux (Intermediate Range) Trip

This circuit trips the reactor when one-out-of-the-two intermediate range channels reads above the trip setpoint. This trip, which provides protection during reactor startup, can be manually bypassed if two-out-of-four power range channels are above approximately 10 percent of full power (P-10). Three-out-of-four channels below this value automatically reinstates the trip function. The intermediate channels (including detectors) are separate from the power range channels.

High Neutron Flux (Source Range) Trip

This circuit trips the reactor when one of the two source range channels reads above the trip setpoint. This trip, which provides protection during reactor startup, can be manually bypassed when one of two intermediate range channels reads above the P-6 setpoint value and is automatically reinstated when both intermediate range channels decrease below this value

(P-6). This trip is automatically bypassed by two-out-of-four high power range signals (P-10). The trip function can also be reinstated below P-10 by an administrative action requiring coincident manual actuation. The trip point is set between the source range cutoff power level and the maximum source range power level.

Overtemperature ΔT Trip

The purpose of this trip is to protect the core against departure from nucleate boiling (DNB). This trips the reactor on coincidence of two-out-of-the-four signals, with one set of temperature measurements per loop. The setpoint for this reactor trip is continuously calculated for each loop by solving the following equation:

$$\Delta T_{setpoint} = K_1 - K_2 \left(\frac{1 + \tau_1 s}{1 + \tau_2 s} \right) T_{avg} + K_3 P - f(\Delta\phi)$$

where:

T_{avg}	=	average reactor coolant temperature (F)
P	=	pressurizer pressure (psig)
K_1	=	setpoint bias (F)
K_2, K_3	=	constants based on the effect of temperature and pressure on the DNB limits (F/F, F/psig).
$f(\Delta\Phi)$	=	a function of the flux difference between upper and lower long ion chamber sections (F). (See Figure 7.2-3)
$\tau_1\tau_2$	=	lead-lag time constants (sec^{-1})
S	=	Laplace transform variable

The four long ion chamber units separately feed each overtemperature ΔT trip channel. Thus, a single failure neither defeats the function nor causes a spurious trip. Changes in $f(\Delta\Phi)$ can only lead to a decrease in trip setpoint.

Initiation of automatic turbine load runback by means of an overtemperature ΔT signal is discussed later.

Power Range High Positive Neutron Flux Rate Trip

This circuit trips the reactor when an abnormal rate of increase in nuclear power occurs in two-out-of-four power range channels.

This trip provides protection against rod ejection accidents of low worth from mid-power and is always active.

Power Range High Negative Neutron Flux Rate Trip

Note: Salem NRC License Amendment 278-261 (Salem 1 and 2, respectively) approved the removal of the Negative Flux Rate Trip. This function was initially disabled by setting the setpoint to a greater value than the Maximum Negative Rate expected (per design change package (DCP) 80094424). The Negative Flux Rate Trip circuitry has been physically removed from both Unit 1 and 2 per DCPs 80097106 and 80099680.

Overpower ΔT Trip

The purpose of this trip is to protect against excessive power (fuel rod rating protection). This trips the reactor on coincidence of two-out-of-the-four signals, with one set of temperature measurements per loop.

The setpoint for this reactor trip is continuously calculated for each channel by solving equations of the form:

$$\Delta T_{setpoint} = K_4 - \left(K_5 \frac{t_3 s}{(t_3 s + 1)} T_{avg}\right) + \left(K_6 (T_{avg_o} - T_{avg})\right) - f(\Delta\Phi)$$

where:

$f(\Delta\Phi)$	=	is a function of flux difference between upper and lower ion chamber section (F). (See Figure 7.2-3)
K4	=	a preset manually adjustable bias (F)
K5, K6	=	constants relating the effect of T_{avg} and rate of change of T_{avg} on overpower limit
T_{avg_o}	=	a setpoint bias (F)
T_{avg}	=	average reactor coolant temperature (F)
t_3	=	rate-lag time constant, (sec^{-1})
s	=	Laplace transform variable

Variables in parentheses are individually low limited to zero.

Initiation of automatic turbine load runback by means of an overpower ΔT signal is discussed below.

Low Pressurizer Pressure Trip

The purpose of this trip is to protect against excessive core steam voids and to limit the necessary range of protection afforded by the overtemperature ΔT trip. This trips the reactor on coincidence of two-out-of-the-four low pressurizer pressure signals. This trip is blocked when three-of-the-four power range channels and two of two turbine steamline inlet pressure channels read below approximately 10 percent power (P-7). Each channel is lead-lag compensated.

High Pressurizer Pressure Trip

The purpose of this trip is to limit the range of required protection from the overtemperature ΔT trip and to protect against Reactor Coolant System overpressure. The reactor is tripped on coincidence of two-out-of-the-four high pressurizer pressure signals.

High Pressurizer Water Level Trip

This trip is provided as a backup to the high pressurizer pressure trip. The coincidence of two-out-of-the-three high pressurizer water level signals trips the reactor. This trip is blocked when three-of-the-four power range channels and two of the two turbine steamline inlet pressure channels read below approximately 10 percent power (P-7).

Low Reactor Coolant Flow Trip

This trip protects the core from DNB following a loss-of-coolant flow. The means of sensing loss-of-coolant flow are described below.

Low Primary Coolant Flow Trip

A loop low flow signal is generated by two-out-of-three low flow signals per loop. Above the P-7 setpoint (approximately 10 percent of full power) low flow in any two loops results in a reactor trip. Above the P-8 setpoint (approximately 36 percent of full power) low flow in any loop results in a reactor trip.

Reactor Coolant Pump Breaker Position Trip

Opening of two reactor coolant pump breakers above the P-7 interlock setpoint, which is indicative of an imminent loss-of-coolant flow, will result in a reactor trip.

Reactor Coolant Pump Undervoltage and Underfrequency Trips

There is one underfrequency and one undervoltage sensor per bus. A 1/2 logic taken twice underfrequency signal-directly trips all of the reactor coolant pumps, and also produces a direct reactor trip (interlocked by P-7). (An indirect trip is produced by the pump breaker-position trip.) For undervoltage protection, there is an undervoltage sensor on each of the four busses. Reactor trip above P-7 is actuated by a 1/2 logic taken twice.

All of these low reactor coolant flow trips are blocked below the P-7 setpoint (approximately 10 percent power).

Safety Injection System Actuation Trip

A reactor trip occurs when the Safety Injection System is actuated. The means of actuating the Safety Injection System trips are:

1. Low pressurizer pressure (2/3 pressure signals). Manual block is permitted by 2/3 low pressurizer pressure

2. High containment pressure (2/3)

3. Two of three low steam line pressure of one line compared to other three lines (high differential pressure)

4. High steam flow in two of four lines (1/2 measurements per line) (two of four lines) in coincidence with low-low T_{avg} (2/4) or low steam line pressure (2/4)

5. Manual (1/2).

These trips are listed in Table 7.2-1.

Reactor Trip on Turbine Generator Trip (Anticipatory)

The reactor trip on a turbine trip is actuated by two-out-of-three logic from the low autostop oil pressure or by all closed signals from the turbine steam stop valves. A turbine trip causes a direct reactor trip above P-9 and results in a controlled short-term release of steam to the condenser, which removes sensible heat from the Reactor Coolant System and thereby avoids steam generator safety valve actuation. This reactor trip is anticipatory and included as part of good engineering practice and prudent design. No credit is taken in any of the safety analyses for this trip.

The Turbine Control System automatically trips the turbine generator under any of the conditions listed in Section 10.2.2.3 and 10.2.2.4.

Low-Low Steam Generator Water Level Trip

The purpose of this trip is to prevent a loss of the reactor's heat sink. The trip is actuated on two-out-of-the-three low-low water level signals in any steam generator.

7.2.2.6 Reactor Coolant Flow Measurement

Elbow taps are used on each of the four loops in the Primary Coolant System as an instrument device that indicates the status of the reactor coolant flow. The basic function of this device is to provide information as to whether or not a reduction in flow rate has occurred. The correlation between flow reduction and elbow tap read-out has been well established by the following

equation: $\Delta P/\Delta P0 = (\omega/\omega^0)^2$, where ΔP^0 is the referenced pressure differential with the corresponding referenced flow rate $\omega 0$ and ΔP is the pressure differential with the corresponding referenced flow rate ω. The full flow reference point is established during initial plant startup. The low flow trip point is then established by extrapolating along the correlation curve. The technique has been well established in providing core protection against low coolant flow in Westinghouse PWR plants. The expected absolute accuracy of the channel is within ± 10 percent and field results have shown the repeatability of the trip point to be within ± 1 percent. The analysis of the loss of flow transient presented in Section 15 assumes instrumentation error of ± 3 percent.

7.2.3 System Evaluation

7.2.3.1 Reactor Protection System and Departure from Nucleate Boiling

The following is a description of how the Reactor Protection System prevents departure from nucleate boiling (DNB).

The plant variables affecting the DNBR are:

1. Thermal power
2. Coolant flow
3. Coolant temperature
4. Coolant pressure
5. Core power distribution

Figure 7.2-1 illustrates the core limits for which DNBR for the hottest fuel rod is 1.3 and shows the overpower and overtemperature ΔT reactor trips locus as a function of T_{avg} and pressure. This illustration is derived from the inlet temperature versus power relationships.

Reactor trips for a fixed high pressurizer pressure and for a fixed low pressurizer pressure are provided to limit the pressure range over which core protection depends on the overpower and overtemperature ΔT trips.

Reactor trips on nuclear overpower and low reactor coolant flow are provided for direct, immediate protection against rapid changes in these parameters. However for all cases in which the calculated DNBR approaches 1.3, a reactor trip on overpower and/or overtemperature ΔT would also be actuated.

For the postulated abnormal conditions, the exact combination of conditions (reactor coolant pressure, temperature and core power, instrumentation inaccuracies, etc.) will not cause a DNBR to go below 1.30 before a reactor trip. The simultaneous loss of power to all of the reactor coolant pumps is the accident condition most likely to approach a DNBR of 1.30 for the calculated worst fuel rod. In any event, the DNBR is near 1.30 for only a few seconds.

The ΔT trip functions are based on the differences between measured hot leg and cold leg temperatures. These differences are proportional to core power.

The ΔT trip functions are provided with a nuclear differential flux feedback to reflect a measure of axial power distribution. This will assist in preventing an adverse axial distribution which could lead to exceeding the allowable core conditions.

In the event of a difference between the upper and lower ion chamber signals that exceeds the desired range, automatic feedback signals are provided to reduce the overpower-overtemperature trip setpoints, which in turn block rod withdrawal and reduce the load to maintain appropriate operating margins.

7.2.3.2 Specific Control and Protection Interactions

Nuclear Flux

Four power-range nuclear flux channels are provided for overpower protection. Isolated outputs from all four channels are auctioneered for automatic rod control. If any channel fails in such a way as to produce a low output, that channel is incapable of proper overpower protection. Two-out-of-four overpower trip logic will ensure an overpower trip if needed even with an independent failure in another channel.

In addition, the Control System will respond only to rapid changes in indicated nuclear flux; slow changes or drifts are compensated by the temperature control signals.

Coolant Temperature

One hot-leg and one cold-leg temperature reading is provided from each coolant loop to use for protection. Narrow-range thermowell resistance temperature detectors (RTDs) are provided for each coolant loop. In the hot legs, sampling scoops are used because the flow is stratified; that is, the fluid temperature is not uniform over a cross section of the hot leg. One dual-element RTD is mounted in each of the three sampling scoops associated with each hot leg. The scoops extend into the flow stream at locations 120 degrees apart in the cross-sectional plane. Each scoop has five orifices which sample the hot-leg flow along the leading edge of the scoop. Outlet ports are provided in the scoops to direct the sampled fluid past the sensing element of the RTDs. One of each RTD's dual elements is used for protection, while the other is an installed spare. Three protection readings from each hot leg are averaged to provide a hot-leg reading for that loop.

One dual-element RTD is mounted in a thermowell associated with each cold leg. No flow sampling is needed because coolant flow is well mixed by the reactor coolant pumps. As is the case with the hot leg, one element is used while the other is an installed spare.

Certain control signals are derived from individual protective channels through isolation amplifiers. The isolation amplifiers are classified as part of the protective system. The reactor control system uses the highest of four isolated T_{avg} signals.

The RTDs are a fast-response design which conforms to applicable IEEE standards and 10CFR50.49 requirements.

The main requirement for reactor protection is that the temperature difference between the hot leg and cold leg varies linearly with power. All ΔT setpoints are in terms of the full power ΔT; thus, absolute ΔT measurements are not required. Linearity of ΔT with power will be verified during startup tests.

Reactor protection logic using reactor coolant loop temperatures is 2/4, with one channel per reactor coolant loop. This complies with all applicable IEEE Standard 279-1971 criteria.

Since reactor control is based on the highest average temperature from the four loops, the control rods are always moved based upon the most pessimistic temperature measurement with respect to margins to DNB. A spurious low average temperature measurement from any loop temperature control channel will cause no control action.

A spurious high average temperature measurement will cause rod insertion (safe direction).

Channel deviation signals in the Control System will give an alarm if any temperature channel deviates significantly from the auctioneered (highest). Automatic rod withdrawal blocks will also occur if any one of four nuclear channels indicates an overpower condition, or if any two of four temperature channels indicate an overtemperature or overpower condition. Although automatic rod withdrawal is disabled, the automatic rod withdrawal blocks remain. Two-out-of-four (2/4) trip logic is used to ensure that an overtemperature or overpower ΔT trip will occur if needed, even with an independent failure in another channel. Finally, as shown in Section 15.1, the combination of trips on nuclear overpower and high pressurizer pressure also serves to limit an excursion for any rate of reactivity insertion.

For operation with a loop out of service, only one safety-related setpoint must be manually reset to a more restrictive value. The setpoint involved is the overtemperature ΔT reactor trip. The setpoint change must be made to one protection channel for each of the operating loops.

If the overtemperature ΔT setpoints can be reset (lowered) before turning off one pump, the setpoint should be reset during operation with all loops in service. If the overtemperature ΔT setpoints cannot be reset without causing a reactor trip before turning off one pump, reactor power should be reduced below the setpoint of P-8, the affected pump turned off, and the setpoints reset. Any time one pump is turned off or trips off when above P-8, an automatic reactor trip will occur.

The P-8 acts essentially as a high neutron flux reactor trip when operating with one loop not in service.

The P-8 setpoint will normally be set in such a way that the DNBR is above 1.30 (for anticipated transients) even without resetting the overtemperature ΔT trips to the values appropriate for operation a loop out of service. Setting P-8 in this way restricts the operating power level with a loop out of service to a value considerably lower than that which can be safely allowed after

resetting the overtemperature ΔT setpoints. After the overtemperature ΔT setpoints have been reduced to the values required for operation with a loop out of service, the P-8 setpoint will be increased to the maximum value allowed consistent with maintaining the DNBR above 1.30 during all anticipated transients.

Setpoints appropriate for operation with one loop out of service have been included in the Technical Specifications. The resetting of the ΔT trip will be carried out under prescribed administrative procedures and only under the direction of authorized supervision.

Pressurizer Pressure

The four pressurizer pressure protection channel signals are used for high and low pressure protection and as inputs to the overtemperature ΔT trip protection and relief valves actuation functions (Figure 7.2-4). Isolated output signals from these channels are used for pressure control. These are used to control pressurizer spray and heaters. Pressurizer pressure is sensed by fast response pressure transmitters with a time response of better than 0.2 second. A 1-second response time is used which is more than adequate to cover the response characteristics of the tripping channels.

A spurious high pressure signal from one channel can cause low pressure by actuation of the spray valve. Additional redundancy is provided in the Protection System to ensure low pressure protection, i.e., two-out-of-four low pressure reactor trip logic and two-out-of-three logic for safety injection.

The pressurizer heaters are incapable of overpressurizing the Reactor Coolant System. Maximum steam generation rate with heaters is about 15,000 lb/hr, compared with a total capacity of 1,260,000 lb/hr for the three safety valves and a total capacity of 420,000 lb/ hr for the two power-operated relief valves. Therefore, overpressure protection is not required for a pressure control failure; however, two-out-of-four high pressure trip logic is used.

In addition, either of the two relief valves can easily maintain pressure below the high pressure trip point. The two relief valves are controlled by separate inputs from the same protection channel signals used for high pressure protection. A two-out-of-two actuation logic is provided for each relief valve. Finally, the rate of pressure rise achievable with heaters is slow, and ample time and pressure alarms are available for operator action.

Pressurizer Level

Three pressurizer level channels are used for reactor trip 2/3 high level). Isolated signals from these channels are used for pressurizer water level control, increasing or decreasing the pressurizer water level as required. A failure in the Level Control System could fill or empty the pressurizer at a slow rate (in the order of half an hour or more). (See Figure 7.2-5.)

The design of the pressurizer water level instrumentation is a slight modification of the usual tank level arrangement using differential pressure between an upper and a lower tap. (See Figure 7.2-6.) The modification consists of the use of a sealed reference leg instead of the conventional open column of water.

Experience has shown that hydrogen gas can accumulate in the upper part of the condensate pot on conventional open reference leg systems in pressurizer water level service. At Reactor Coolant System operating pressures, high concentrations of dissolved hydrogen in the reference leg water are possible. On sudden depressurization accidents, it has been hypothesized that rapid effervescence of the dissolved hydrogen could blow water out of the reference leg and cause a large level error, measuring higher than actual level. To eliminate the possibility of such effects, a bellows is used in a pot at the top of the reference leg to provide an interface seal and prevent dissolving of hydrogen gas into the reference leg water.

The reference leg is uninsulated and will remain at local ambient temperature. This temperature will vary somewhat over the length of the reference leg piping under normal operating conditions but will not exceed approximately 140°F. During a blowdown accident, any reference leg water flashing to steam will be confined to the condensate steam interface in the condensate pot at the top of the temperature barrier leg and will have only a small (about 1-inch) effect on measured level. Some additional error may be expected due to effervescence of hydrogen in the temperature barrier water.

However, even if complete loss of this water is assumed, the error will be less than 1 foot and can be tolerated.

The first pressurizer level channel utilizing the sealed reference leg was installed and checked at the R. E. Ginna Plant in March 1970. Operational accuracy has been verified by long-term use of the sealed reference leg system in parallel with an open reference leg channel. No effects of operating pressure variation on either the accuracy or integrity of the channel have been observed.

Calibration of the sealed reference leg system is done in place after installation by application of known pressure to low pressure side of the transmitter and measurement of the height of the reference column. The effects of static pressure variations are predictable. The largest effect is due to the density change in the saturated fluid in the pressurizer itself. The effect is typical of level measurements in all tanks with two-phase fluid and is not particular to the sealed reference leg technique. In the sealed reference leg, there is a slight compression of the fill water with increasing pressure, but this is taken up by the flexible bellows. A leak of the fill water in the sealed reference leg can be detected by comparison of redundant channel readings on-line and by physical inspection of the reference leg off-line with the channel out of service. Leaks of the reference leg to atmosphere will be immediately detectable by off-scale indications on the control board. Further detection of leakage is provided by the plant computer alarms for deviation between redundant channels.

<u>High Level</u>

A reactor trip on pressurizer high level is provided to prevent filling the pressurizer in the event of a rapid thermal expansion of the reactor coolant. A rapid change from high rates of steam relief to water relief could be damaging to the safety valves, relief piping, and pressure relief tank. However, a level control failure cannot actuate the safety valves because the high pressure reactor trip is set below the safety valve set pressure. With the slow rate of charging available, overshoot in pressure before trip is effective is much less than the difference between

reactor trip and safety valve set pressures. Therefore, a control failure does not require Protection System action. In addition, ample time and alarms are available for operator action.

Low Level

For control failures which tend to empty the pressurizer, ample time and alarms exist for action.

Steam Generator Water Level Feedwater Flow

Before describing control and protection interaction for these channels, it is beneficial to review the Protection System basis for this instrumentation. (See Figure 7.2-7.)

The basic function of the reactor protection circuits associated with low steam generator level and low feedwater flow is to preserve the steam generator heat sink for removal of long-term residual heat. Should a complete loss of feedwater occur with no protective action, the steam generators would boil dry and cause an overtemperature-overpressure excursion in the reactor coolant. Reactor trips on temperature and pressure will trip the unit before there is any damage to the core or Reactor Coolant System. Redundant auxiliary feedwater pumps are provided to prevent residual heat after trip from causing thermal expansion and discharge of the reactor coolant through the pressurizer relief valves. Reactor trips act before the steam generators are dry to reduce the required capacity and starting time requirements of these pumps and to minimize the thermal transient on the Reactor Coolant System and steam generators. Independent trip circuits are provided for each steam generator for the following reason:

> Should severe mechanical damage occur to the feedwater line to one steam generator, it is difficult to ensure the functional integrity of level and flow instrumentation for that unit. For instance, a major pipe break between the feedwater flow element and the steam generator would cause high flow through the flow element. The rapid depressurization of the steam generator would drastically affect relation between downcomer water level and steam generator water inventory.

A spurious high signal from the feedwater flow channel being used for control would cause a reduction in feedwater flow and prevent that channel from tripping. A reactor trip on low-low water level, independent of indicated feedwater flow, will ensure a reactor trip if needed.

In addition, the three-element feedwater controller incorporates reset on level, such that with expected controller settings a rapid increase in the flow signal would cause only a small decrease in level before the controller reopened the feedwater valve. A slow decrease in the feedwater signal would have no effect at all.

A spurious low steam flow signal would have the same effect as a high feedwater signal, discussed above.

A spurious high water level signal from the protection channel used for control will tend to close the feedwater valve. This level channel is independent of the level and flow channels used for reactor trip on low flow coincident low level.

1. A rapid increase in the level signal will completely stop feedwater flow and lead to an actuation of a reactor trip on low feedwater flow coincident with low level.

2. A slow drift in the level signal may not actuate a low feedwater signal. Since the level decrease is slow, the operator has time to respond to low level alarms. Since only one steam generator is affected, automatic protection is not mandatory and reactor trip on two-out-of-three low-low level is acceptable.

Steam Line Pressure

Three pressure channels per steam line are used for steam line break protection. These are combined with other signals as shown in Table 7.2-1. Two-out-of-four (2/4) high steam flow in coincidence with 2/4 low-low T_{avg} or 2/4 low steam line pressure will actuate safety injection.

7.2.3.3 Reactor Trip Breakers

Trip breaker failure in Unit 1 occurred on February 22 and 25, 1983. Following these events a comprehensive corrective action plan was developed by Public Service Electric & Gas (PSE&G) and submitted to the NRC by letters dated April 8 and 28, 1983 (Uderitz to Eisenhut). PSE&G subsequently engaged the BETA Corporation to review the corrective action plan. BETA's report (6) and findings were submitted to the NRC by letter dated May 31, 1983 (Uderitz to Eisenhut). In response to the Unit 1 event, the NRC issued Generic Letter 83-28 addressing a number of broad implications. In addition to information in the corrective action plan, PSE&G responded specifically to Generic Letter 83-28 by letters dated July 22, 1983 and November 7, 1983 (both Liden to Varga). Subjects discussed in these documents which are reflected in other sections of the FSAR are as follows:

Subject	FSAR Section
Vendor Manuals	13.5.3
Preventive Maintenance	13.5.3
Reactor Trip Breaker ATWS Event	Appendix 7A

The effects of the comprehensive preventive maintenance program resulting from the February 1983 event has been an increase in the reliability of the reactor trip breakers in performing their function (i.e., open). Continued assurance of reactor trip breaker and reactor trip bypass breaker operability is provided by the performance of periodic maintenance on these breakers in accordance with the PM Program as follows:

1. Response time testing, (3 times) (visicorder) trend data

2. Trip bar lift force measurements

3. U.V. output force measurement

4. Dropout voltage check

5. Servicing/lubrication/adjustments - If during such maintenance a reactor trip breaker or reactor trip bypass breaker fails, (1) with <300 grams of weight added to the breaker trip bar or (2) with a response time that results in an overall reactor trip system time response exceeding the Technical Specification limit, such that a Technical Specification Action is entered, then a Special Report to the NRC shall be submitted within 30 days as per Technical Specification 6.9.2. (Reference Technical Specification Table 3.3-1 Notation ###).

6. Repeat items 1 through 4 following any necessary actions resulting from item 5.

7.2.3.4 Tests and Inspections

A plan for periodic component and system testing and material examinations was prepared for use throughout plant life. Requirements for inspection and testing of reactor trip and bypass breakers are outlined in correspondence from R. A. Uderitz to D. G. Eisenhut dated March 14, 1983; April 8, 1983; April 28, 1983; and May 31, 1983.

NOTE: Technical Specification amendments 114 (Unit 1) and 96 (Unit 2) have changed NRC reporting requirements for reactor trip breaker surveillance failures.

Reporting recommendations referenced in the April 8, 1983 letter from R.A. Uderitz to D.G. Eisenhut are effectively void as they have been superceded by these Technical Specification Amendments.

7.2.4 References for Section 7.2

1. Burnett, T. W. T., "Reactor Protection System Diversity in Westinghouse PWR's," WCAP-7306, April 1969.

2. Lipchak, J. B. and Stokes, R. A., "Nuclear Instrumentation System," WCAP-7380-L (Proprietary), December 1970 and WCAP-7669 (Nonproprietary), April 1971.

3. Katz, D. N., "Solid State Logic Protection System Description," WCAP-7488-L (Proprietary), January 1971 and WCAP-7672 (Nonproprietary), June 1971.

4. "Test Report - Nuclear Instrumentation System Isolation Amplifier," WCAP-7819-RI-A, Revision 1

5. Bruno, J., "Isolation Tests - Process Instrumentation Isolation Amplifier, Westinghouse Computer and Instrumentation Division, Model 131-110," WCAP-7509-L (Proprietary), April 1970 and WCAP-7824 (Nonproprietary), December 1971.

6. Basic Energy Technology Associates (BETA), "A Review of Public Service Electric and Gas Company Corrective Action Program Related to Reactor Trip Breaker Failures at Salem Generating Station, Unit No. 1," May 27, 1983.

7. WCAP-16770-P, Westinghouse SSPS Safeguards Driver Board Replacement Summary Report, August 2008.

8. WCAP-16771-P, Westinghouse SSPS Undervoltage Driver Board Replacement Summary Report, August 2008.

9. WCAP-16772-P, Westinghouse SSPS Semi-Automatic Tester Board Replacement Summary Report, February 2012.

10. WCAP-16769-P, Westinghouse SSPS Universal Logic Board Replacement Summary Report, February 2011.

	Reactor Trip	Coincidence Circuitry and Interlocks	Comments
1.	Manual	1/2, no interlocks	
2.	High neutron flux (Power Range)	2/4, low setpoint interlocked with P-10	High and low settings; manual block and automatic reset of low setting by P-10, Table 7.2-2
3.	Overtemperature ΔT	2/4, no interlocks	
4.	Overpower ΔT	2/4, no interlocks	
5.	Low pressurizer pressure	2/4, interlocked with P-7	
6.	High pressurizer pressure	2/4, no interlocks	
7.	High pressurizer water level	2/3, interlocked with P-7	
8.	Low reactor coolant flow	2/3 signals per loop, interlocked with P-7, and P-8	Blocked below P-7. Low flow in 1 loop permitted below P-8.
9.	Monitored electrical supply to reactor coolant pumps:		
9A	Undervoltage	1/2 taken twice, interlocked with P-7	
9B.	Underfrequency	1/2 taken twice, interlocked with P-7	1/2 twice underfrequency signals trip all reactor coolant pumps and directly actuate reactor trip: interlocked with P-7. (Opening of the coolant pump breakers will also actuate a reactor trip.)
9C.	Reactor coolant pump breakers	Interlocked with P-7	Blocked below P-7. Open breaker in 1 loop permitted above P-7.
10.	Safety injection signal (actuation)	Low pressurizer pressure (2/3) or 2/3 high containment pressure; or 2/3 differential steam line pressure signals of one line compared with the other three lines; or 2/4 high steam flow in coincidence with 2/4 low-low T_{avg} or 2/4 low steam line pressure; or manual 1/2 (See 7.2 System Description-Protective Action For Interlocks).	Trips main feedwater pumps. Closes all feedwater control valves. Closes feed water pump discharge valves and initiates Phase A isolation. Initiates turbine trip.
11.	Turbine-generator trip	2/3 low auto stop oil pressure (interlocked with P-9) or all stop valves closed	(Anticipatory trip of the reactor. No credit taken in accident analysis.)
12.	Low-low steam generator water level	2/3, per loop	
13.	Intermediate range neutron flux	1/2, manual block permitted by P-10	Manual block and automatic reset

Reactor Trip	Coincidence Circuitry and Interlocks	Comments
14. Source range neutron flux	1/2, manual block permitted by P-6, interlocked with P-10	Manual block and automatic reset
15. High flux rate trips (Note 2)	2/4, no interlocks	Positive and negative high flux trips provided
16. Containment pressure (Note 1)	Coincidence of 2/3 containment high pressure or 1/2 manual	Actuates all non-essential process lines containment isolation trip valves-ation Phase A
	Coincidence of 2/4 containment Hi-Hi pressure or 2/2 manual	Actuates all remaining trip valves (except those required for operation of engineered safeguard systems)
17. High containment activity	High activity signal, from either air particulate detector or radiogas detector, or 1/2 manual	Closes containment purge supply, exhaust ducts and all others necessary to isolate containment atmosphere
Engineered Safeguards Systems Actuation		
18. Safety injection signal (S)	See Item 10	
19. Containment spray signal (P)	See second part of item 16	
20. NaOH addition	Containment Spray Actuation Signal	
Steam Lines Isolation Actuation		
21. Steam flow	High steam line flow in 2 out of 4 lines coincident with either low-low T_{avg} in 2 out of 4 loops or low steam pressure in 2 out of 4 lines	
Containment pressure (Note 1)	2/4 Hi-Hi containment pressure	
22. Manual (per steam line)	1/1 per steam line	
Auxiliary Feedwater Actuation		
23. Turbine driven pump	Coincidence of 2/3 low-low level in any two steam generators; undervoltage 1/2 twice on RCP busses; or manual (local and remote)	2/3 high level in steam generator trips main feedwater pumps
24. Motor drive pumps	2/3 low level in any steam generator: or trip of both main feedwater pumps, or safeguards sequence signal, or blackout sequence signal, or manual (local and remote)	Safeguards automatic loading signal blocks manual start

Reactor Trip	Coincidence Circuitry and Interlocks	Comments
Main Feedwater Isolation		
25. Close main feedwater control valves (fast closure) and feedwater bypass valves and feedwater inlet stop valves	Actuated by: 1. Safety injection (See No. 10) 2. 2/3 Hi-Hi level in steam generator 3. Low actioneered T_{avg} and reactor trip	

Note 1: Definition of “S”, “T”, and “P” signals:

Signal	Initiated by:	Action
“S”	Safety injection signal	Actuates safety injection
“T”	Safety injection signal	Actuates containment isolation Phase A (All non-essential process lines)
“P”	2/4 Hi-Hi Containment Pressure	Activates containment spray, steam lines isolation and Phase B containment isolation (remaining process lines)

NOTE 2: Salem NRC License Amendment 278-261 (Salem 1 and 2 respectively) approved the removal of the Negative Flux Rate Trip. This function was initially disabled by setting the setpoint to a greater value than the Maximum Negative Rate expected (per design change package (DCP) 80094424). The Negative Flux Rate Trip circuitry has been physically removed for Unit 1 and 2 per DCPs 80097106 and 80099680).

Designation	Derivation	Function
P-4	Reactor trip	Actuates turbine trip
		Close main feedwater valves on Tavg below setpoint
		Prevents opening of main feedwater valves which were closed by safety injection or high steam generator water level
		Prevents or defeats the automatic block of steam dump control via load rejection controller (enables plant trip controller)
P-6	1/2 Neutron flux (intermediate range) above setpoint	Allows manual block of source range reactor trip
	2/2 Neutron flux (intermediate range) above setpoint	Defeats the block of source range reactor trip
P-7	3/4 Neutron flux (power range) below setpoint (from P-10) and 2/2 turbine steamline inlet pressure below setpoint (from P-13)	Blocks reactor trip on: Low flow or reactor coolant pump breakers open in more than one loop, undervoltage, underfrequency, pressurizer low pressure, and pressurizer high level
P-8	3/4 Neutron flux (power range) below setpoint	Blocks reactor trip on low flow in a single loop
P-9	2/4 Neutron flux (power range) above setpoint	Prevents or defeats the automatic block of reactor trip on turbine trip 50% of rated thermal power
P-10	2/4 Neutron flux (power range) above setpoint	Allows manual block of power range (low setpoint) reactor trip trip
		Allows manual block of intermediate range reactor trip and intermediate range rod stops (C-1)
		Blocks source range reactor trip (backup for P-6)
P-10 cont.	3/4 Neutron flux (power range) below setpoint	Defeats the block of power range (low setpoint) reactor trip
		Defeats the block of intermediate range reactor trip and intermediate range rod stops (C-1)
		Input to P-7
P-11	2/3 Pressurizer pressure below setpoint	Allows manual block of safety injection actuation on low pressurizer pressure signal coincident with low pressurizer level signal
	2/3 Pressurizer pressure above setpoint	Defeats manual block of safety injection actuation
P-12	2/4 T_{avg} below setpoint	Actuates safety injection and steamline isolation on high steamline flow. Allows manual block of safety injection actuation on high steam line flow
		Blocks steam dump to all valves

Designation	Derivation	Function
		Allows manual bypass of steam dump block for the cooldown valves only
	3/4 T_{avg} above setpoint	Defeats the manual block of safety injection actuation on high steam line flow
		Defeats the manual bypass of steam dump block
P-13	2/2 Turbine steamline inlet pressure below setpoint	Input to P-7
P-14	2/3 Hi-Hi steam generator level above setpoint on any steam generator	Trips all feedwater pumps, isolates feedwater, and trips turbine
C-1	1/2 Neutron flux (intermediate range) above setpoint	Blocks automatic and manual control rod withdrawal*
C-2	1/4 Neutron flux (power range) above setpoint	Blocks automatic and manual control rod withdrawal*
C-3	2/4 Overtemperature ΔT above setpoint	Blocks automatic and manual control rod withdrawal*
		Actuates turbine runback via load reference
C-4	2/4 Overpower ΔT above setpoint	Blocks automatic and manual control rod withdrawal*
		Starts turbine runback via load reference
C-5	1/1 Turbine steamline inlet pressure below setpoint	Blocks automatic control rod withdrawal*
C-6	1/2 Turbine steamline inlet pressure below setpoint	Blocks turbine runback via load limit
C-7	1/1 Time derivative (absolute value) of turbine steamline inlet pressure (decrease only) above setpoint	Makes steam dump valves available for either tripping or modulation
C-9	Any Condenser pressure above setpoint or all circulation water pump breakers open	Blocks steam dump to condenser
C-20	2/2 turbine steamline inlet pressure above setpoint	Arms AMSAC; below setpoint, blocks AMSAC (no control grade only)

* Automatic rod withdrawal is disabled

Al	-	Alarm
Buf	-	Buffer
f	-	Special Function (such as a pressure compensation unit or lead/lag compensation)
F	-	Amplifier
FC	-	Flow controller (off-on unless output signal is shown)
FI	-	Flow Indicator
FLTR	-	Filter
FS	-	Flow Stream
FT	-	Flow Transmitter
FW	-	Flow Water
Hi LRT	-	High Level Reactor Trip
HI PRT	-	High Pressure Reactor Trip
I/I	-	Isolation Current Repeater
ISOL	-	Isolation (other than I/I)
LC	-	Level Controller (off-on unless output signal is shown)
LI	-	Level Indicator
L-Low	-	Low Level
Lo L	-	Low Level
Lo LRT	-	Low Level Reactor Trip
Lo PRT	-	Low Pressure Reactor Trip
L_{ref}	-	Programmed Reference Level
L/L	-	Lead/Lag
LT	-	Level Transmitter
NC	-	Nuclear Flux Controller (Bistable)
NE	-	Nuclear Detector
NI	-	Nuclear Flux Indicator
NM	-	Nuclear Modifier
NQ	-	Nuclear Power Supply
P	-	Pressure
PC	-	Pressure Controller (off-on unless output signal is shown)
PI	-	Pressure Indicator

PM	-	Pressure Modifier
P_{ref}	-	Programmed Reference Pressure
PS	-	Power Supply
PT	-	Pressure Transmitter
QM	-	Flux Modifier
R/I	-	Resistance to Current Connector
RT	-	Reactor Trip
RTD	-	Resistance Temperature Detector
S	-	Control Channel Transfer Switch (used to maintain auto channel during test of the protection channel)
SI	-	Safety Injection
sp	-	Set Point
T	-	Transmitter
TC	-	Temperature Controller
TE	-	Temperature Element
TI	-	Temperature Indicator
TJ	-	Test Signal Insertion Jack
TM	-	Temperature Modifier
TP	-	Test Point
ΦU, L	-	Out of core upper or lower ion chamber flux signals
$\frac{d}{dt}$	-	Time Rate Change
Σ	-	Sum

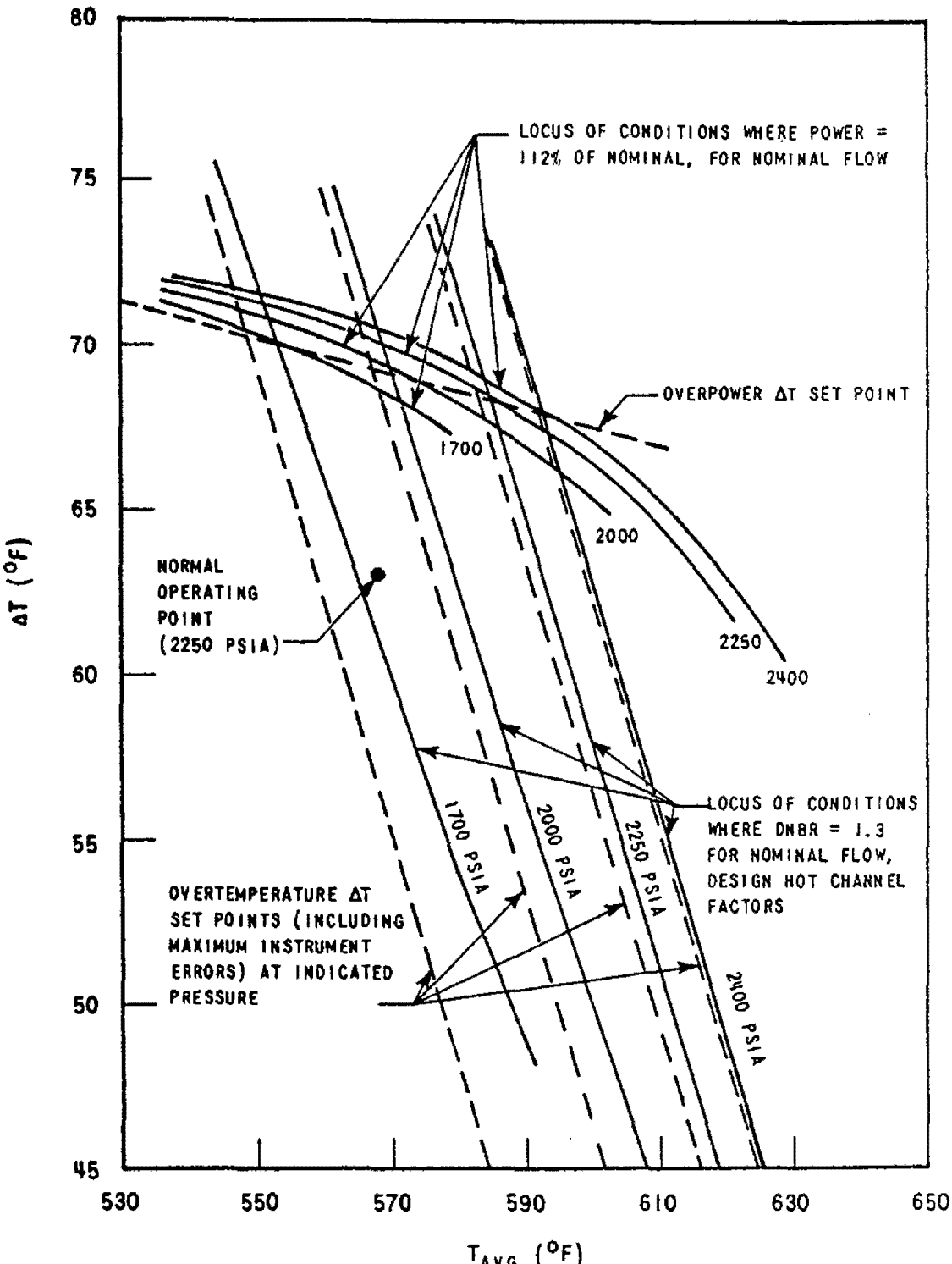

REVISION 6
FEBRUARY 15, 1987

PUBLIC SERVICE ELECTRIC AND GAS COMPANY SALEM NUCLEAR GENERATING STATION	Illustration of Overpower and Overtemperature ΔT Set Points (ΔT versus T_{avg})
	Updated FSAR — Figure 7.2-1

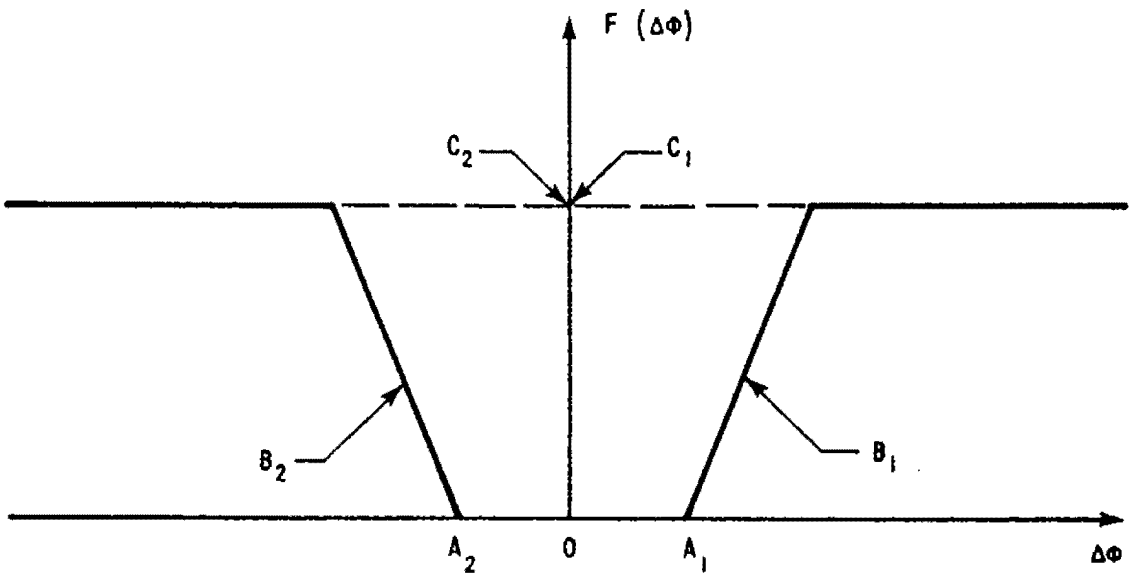

ΔΦ - NEUTRON FLUX DIFFERENCE BETWEEN UPPER AND LOWER LONG ION CHAMBERS.

A_1, A_2 - LIMIT OF F(ΔΦ) DEADBAND

B_1, B_2 - SLOPE OF RAMP; DETERMINES RATE AT WHICH FUNCTION REACHES IT'S MAXIMUM VALUE ONCE DEADBAND IS EXCEEDED

C_1, C_2 - MAGNITUDE OF MAXIMUM VALUES THE FUNCTION MAY ATTAIN

REVISION 6
FEBRUARY 15, 1987

PUBLIC SERVICE ELECTRIC AND GAS COMPANY SALEM NUCLEAR GENERATING STATION	Setpoint Reduction Function for Overpower and Overtemperature ΔT Trips
	Updated FSAR — Figure 7.2-3

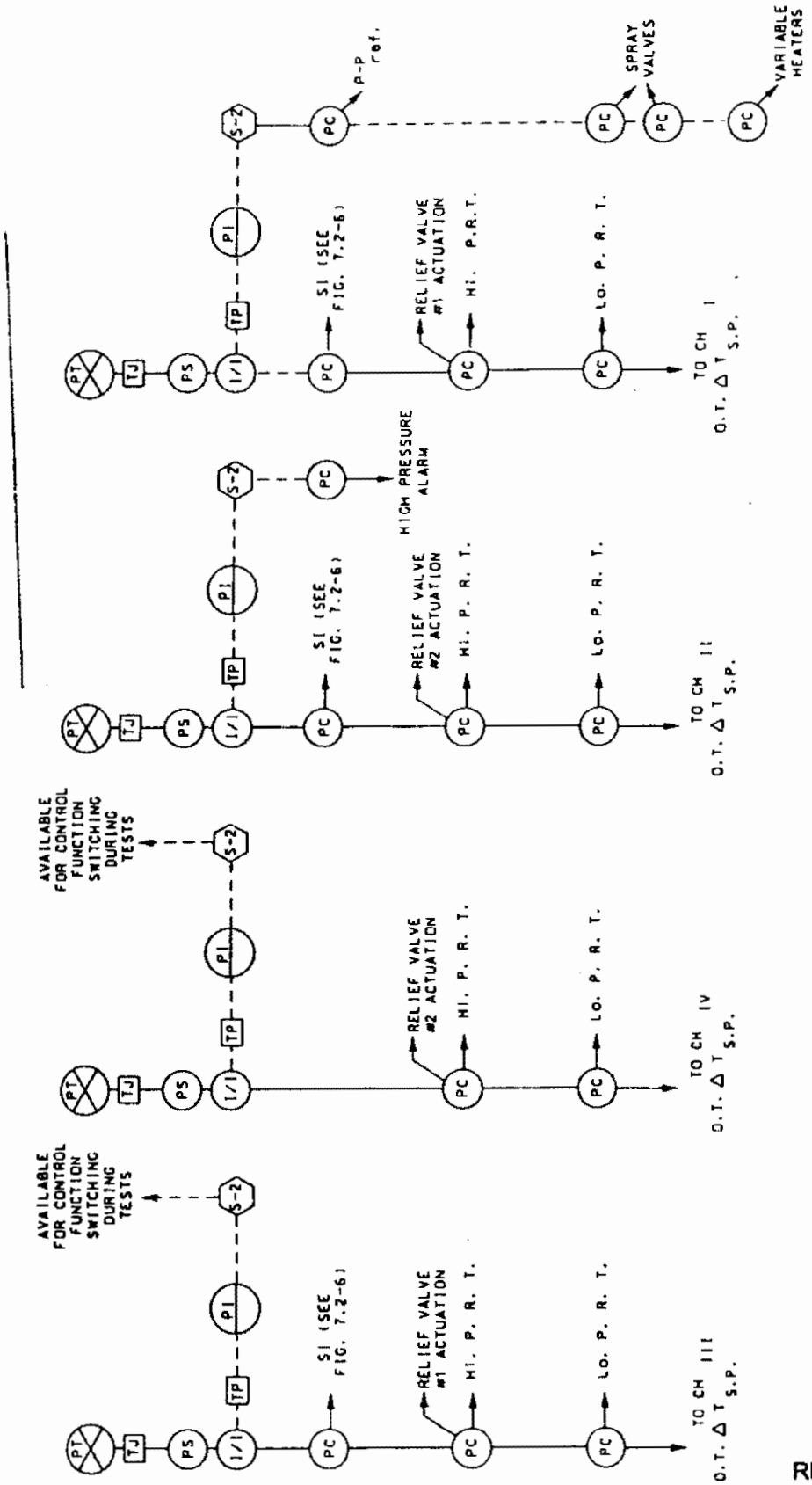

REVISION 17
OCTOBER 16 1998

PUBLIC SERVICE AND GAS COMPANY SALEM NUCLEAR GENERATING STATION	PRESSURIZER PRESSURE CONTROL AND PROTECTION SYSTEM
	UPDATED FSAR — FIGURE 7.2-4

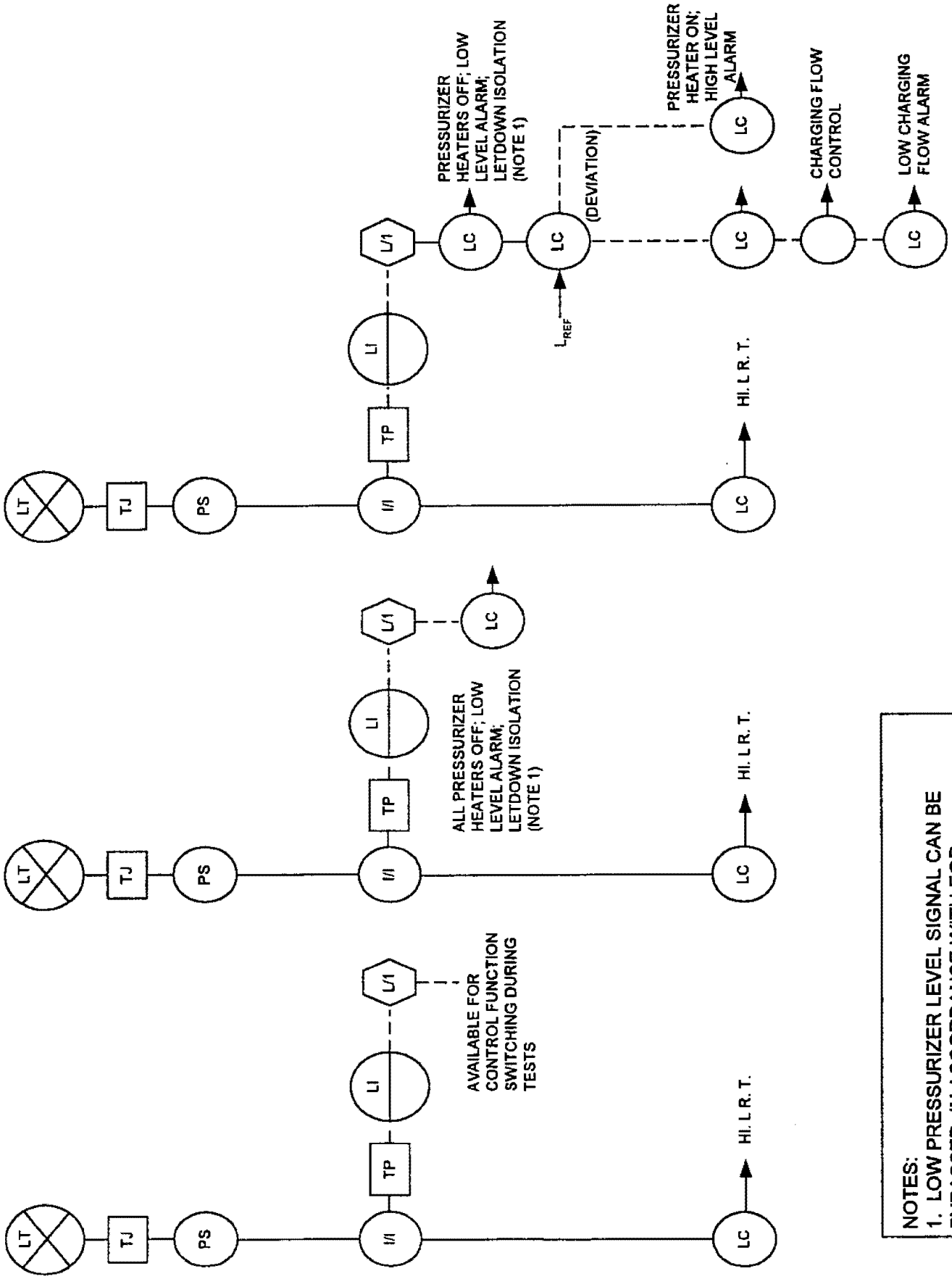

NOTES:
1. LOW PRESSURIZER LEVEL SIGNAL CAN BE BYPASSED, IN ACCORDANCE WITH EOPs, ALLOWING OPERATOR CONTROL OF LETDOWN ISOLATION VALVES WHEN LETDOWN BYPASS SWITCH IS PLACED IN BYPASS MODE.

PUBLIC SERVICE ELECTRIC AND GAS COMPANY SALEM NUCLEAR GENERATING STATION	Pressurizer Level Control and Protection System
	Updated FSAR Revision 16 — Figure 7.2-5 January 31, 1998

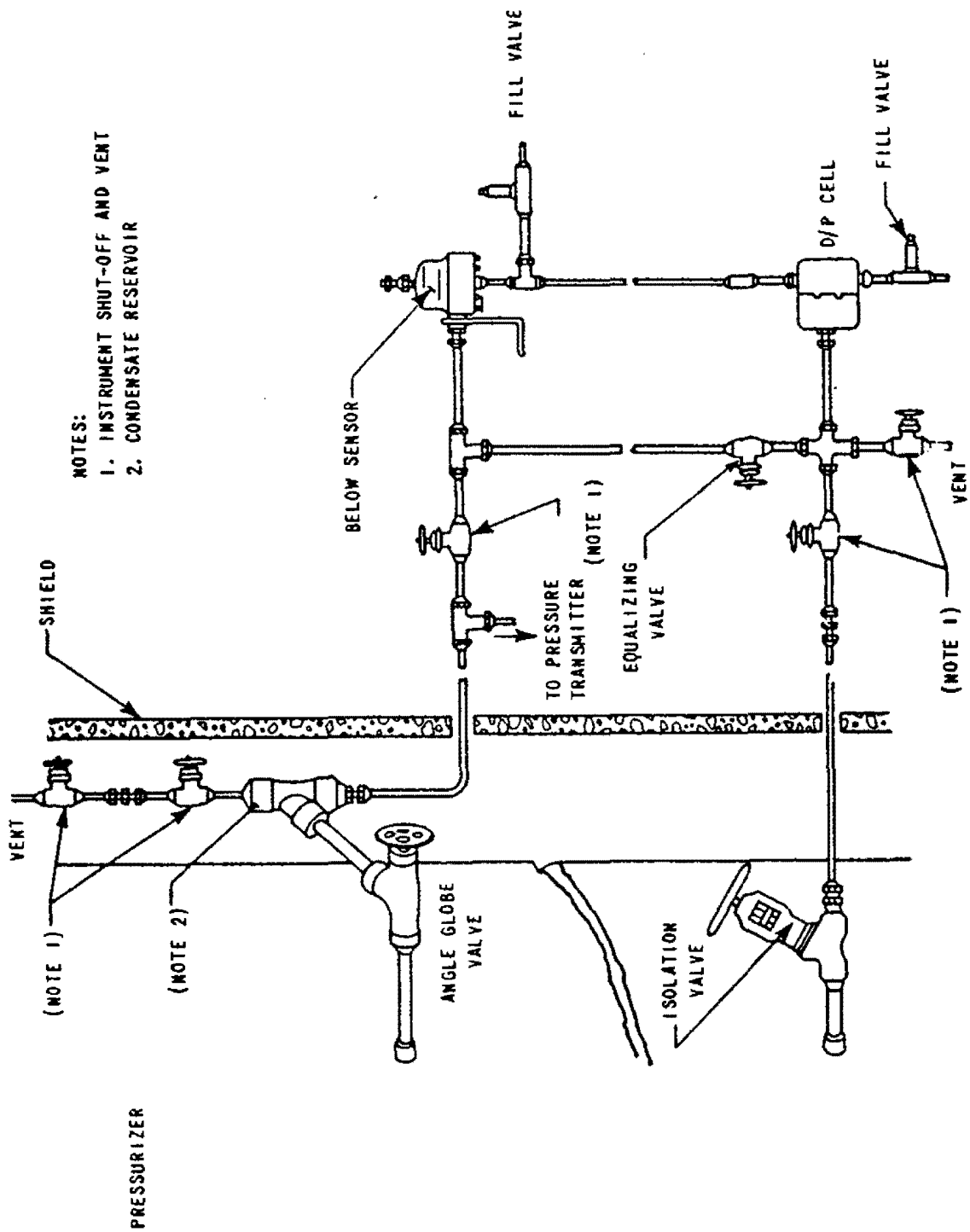

REVISION 6
FEBRUARY 15, 1987

PUBLIC SERVICE ELECTRIC AND GAS COMPANY SALEM NUCLEAR GENERATING STATION	Pressurizer Sealed Reference Leg Level System	
	Updated FSAR	Figure 7.2-6

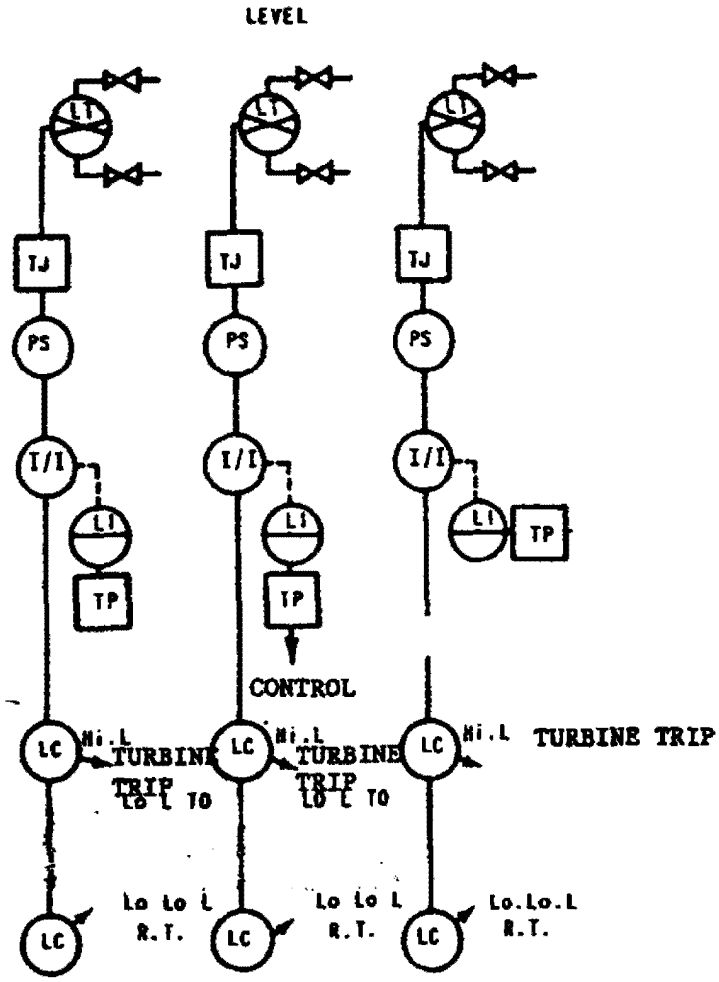

REVISION 17
OCTOBER 16 1998

PUBLIC SERVICE ELECTRIC AND GAS COMPANY SALEM NUCLEAR GENERATING STATION	Steam Generator Level Control and Protection System
	Updated FSAR FIG. 7.2-7

7.3.1 Description

The Engineered Safety Features (ESF) Systems are actuated by redundant logic and coincidence networks similar to those used for reactor protection. Each network actuates a device that operates the associated ESF equipment, motor starters and valve operators. The channels are designed to combine redundant sensors, and independent circuitry, and coincident trip logic. Where possible, different but related parameter measurements are utilized. This ensures a safe and reliable system in which a single failure will not defeat the intended function. The action initiating sensors are listed in Table 7.3-1. The ESF Instrumentation System actuates (depending on the severity of the condition) the Safety Injection System (SIS), containment isolation, Containment Spray System (CSS) and the diesel generators.

Availability of control power to the ESF trip channels is continuously monitored. In general, the loss of instrument power to the sensors, instruments, or logic devices in the ESF instrumentation places that channel in the trip mode. An exception is the containment spray initiating channels which require instrument power for actuation.

The passive accumulators of the Emergency Core Cooling System (ECCS) do not require signal or power sources to perform their functions. The actuation of the active portion of the ECCS is from signals described in Table 7.2-1.

Containment spray operation is initiated by containment high-high pressure. Containment Spray Actuation Signal (CSAS) logic is shown on Figure 7.3-1. The containment pressure is sensed by four independent pressure detectors which are combined in a two-out-of-four logic network. The output signal provides two independent channels for containment spray actuation via the two logic trains. Each CSAS channel initiates operation of a containment spray pump and associated valving.

In the event of a CSAS, the containment spray pumps would be operated from the normal source of power. If this is not available, or subsequently becomes unavailable, the power would be supplied by the emergency diesel generators.

Each spray system isolation valve is opened on a CSAS by a hi-hi containment pressure signal. Containment isolation backup is provided by check valves in the spray system piping.

The spray pump motor starting circuits and spray valve control circuits are provided with manual control switches in the control room. Each pump and isolation valve has test features to permit periodic operability testing of components and circuitry without causing interruption of the spray into the Containment Building.

The logic which initiates containment isolation is shown on Figure 7.3-1. There are four independent containment pressure detectors. Three of the pressure detectors are combined in a two-out-of-three logic to provide the signal for containment isolation for non-essential process lines if the high pressure setpoint is reached. This initiates Phase A containment isolation and safety injection. All four pressure detectors are combined in a two-out-of-four logic to provide the containment isolation signal for all penetrations (including those open to the containment atmosphere), except those required for operation of the ESF if the high-high pressure setpoint is

reached. This initiates Phase B containment isolation, steam line isolation and containment spray.

A table of isolation valve schemes is given in Section 6.2. Air operated isolation valves will automatically go to their ESF position on loss of control air.

The design of the Control Air System precludes the total loss of control air to all systems and equipment. The control air systems are designed to provide a reliable supply of control air during normal and abnormal plant conditions, assuming a single failure in the system. See Section 9.3 for a detailed description of the system.

Isolation valves will be tested when the unit is off-line. The power supply to the Containment Isolation System (CIS) is the vital electrical supply described in Section 8.

Manual actuation of each channel may be accomplished from central control or local switches and individual valve control switches located in the Control Room for isolation valve operation.

Each valve has test features to permit periodic testing of components and circuitry without causing interruption of the containment isolation initiating signal.

The containment isolation signals provide the means of isolating the various pipes passing through the containment walls as required to prevent the release of radioactivity to the outside environment in the event of an accident. The signals for actuation of the containment isolation are given in Table 7.2-1 and Figure 7.3-1.

7.3.1.1 System Design

7.3.1.1.1 Engineered Safety Features Actuation Instrumentation Description

The ESF actuation circuitry and hardware layout are designed to maintain channel isolation up to and including the bistable operated logic relay similar to that of the reactor protection circuitry as discussed in Section 7.2. See Reference 1 for a complete description of the instrumentation.

7.3.1.1.2 Engineered Safety Features and Associated Systems' Actuation

Table 7.2-1 lists the ESF and associated systems' actuation signals.

7.3.1.1.3 Engineered Safety Features Vital Functions

The ESF actuation system automatically performs the following vital functions:

1. Starts operation of the SIS upon: a) low pressurizer pressure signals; b) high containment pressure signals; c) high differential steam pressure between steam lines; or d) high steam line flow signals with low-low T_{avg} or low steam line pressure.

2. Operates the containment isolation valves in non-essential process lines (Phase A Isolation) upon detection of high containment pressure signals.

3. Starts the CSS and operates the remaining containment isolation valves (Phase B Isolation) upon detection of high-high containment pressure.

4. Isolates all main steam isolation valves (MSIVs) on high steam flow coincident with low-low T_{avg} or low steam pressure or high-high containment pressure signals.

5. Safety injection signal will isolate the feedwater lines by closing all control valves (main and bypass valves), trip the main feedwater pumps and close the steam generator feedwater inlet stop valves, and actuate the Auxiliary Feedwater System. It also directly trips the turbine and the reactor.

7.3.1.1.4 Engineered Safety Features Calibration and Test

The ESF actuation channels are designed with sufficient redundancy to provide the capability for channel calibration and test during power operation. Except for containment spray actuation, removal of one actuation channel for test is accomplished by placing that channel in a tripped mode, i.e., a two-out-of-three matrix logic becomes a one-out-of-two matrix logic. Testing does not trip the system unless a trip condition occurs in a redundant channel.

Containment spray actuation channels (from containment pressure) are tested by removing the channel from service. Since 2/4 logic is used, 2/3 logic remains active during testing.

See Reference 1 for a description of analog and logic testing.

7.3.1.1.5 Feedwater Isolation

Any safety injection signal will isolate the main feedwater lines by closing all control valves, tripping the main feedwater pumps and closing the steam generator feedwater inlet stop valves.

7.3.1.1.6 Main Steam Isolation

Protection against a steam line break is provided by safety injection actuation, feedwater isolation to prevent excessive cooldown of the primary side, and main steam isolation to prevent uncontrolled blowdown of more than one steam generator. Closure of all MSIVs is initiated by high steam flow in 2 of 4 coincident with either low-low T_{avg} in 2 of 4 loops or low steam pressure in 2 of 4 lines, by 2 of 4 high-high containment pressure signals, or by 1 of 1 manual pushbuttons per loop. The automatic actuation system is designed to meet the requirements for protective systems as described in sections 7.1.2 and 7.2.1.

7.3.1.1.7 Indication

All transmitted signals (flow, pressure, temperature, etc.) which can cause actuation of the ESF are either indicated or recorded.

7.3.1.1.8 Engineered Safety Features Instrumentation

The following instrumentation ensures monitoring of the effective operation of the ESF.

Containment Pressure

Containment pressure is monitored by four taps, each connected to a pressure sensor, as shown on Figure 7.3-1. Each sensor provides an analog signal to its associated bistables which will trip at present signal values. These tripped bistables provide input to the protection logic circuits which, in turn, trip the relays to actuate the Safeguards System.

Three of the taps each have two bistables, the first of which is set to trip at the hi containment pressure value. When two of the three bistables are tripped, the logic circuits produce an "S-signal" and a "T-signal." The "S-signal" actuates the SIS while the "T-signal" initiates Phase A containment isolation. These first bistables are normally energized and become de-energized when tripped. Thus, a loss of power to two or more channels will produce a trip and initiate safety injection and containment isolation. However, the loss of one channel will neither cause nor prevent the above actions.

The fourth tap has only one bistable associated with its pressure sensor. This bistable, along with the second bistables associated with the other three channels, is set to trip at the hi-hi containment pressure value. When two of the four bistables are tripped, the logic circuits will initiate the containment spray and steam line isolation, and also produce a "P-signal." The "P-signal" initiates Phase B isolation. The bistables in this second set are normally de-energized and become energized when tripped. Thus, momentary loss of power or voltage dip will not cause a spurious trip which would actuate the hi-hi containment signal. It should be noted that for containment spray the logic changes from 2/4 to 2/3 when a channel is placed on test.

Each channel is supplied with electrical power from one of four independent busses. These busses can draw power from the station's batteries through static inverters; a blackout or momentary loss of station power will not cause an interruption in the power supplied to the instruments.

Indicators and alarms are provided in the Control Room to inform the operator of system status and to guide actions taken during recovery operations.

Containment Radiation

There are two detectors, one monitoring containment particulate activity and the other monitoring containment gaseous activity. High radiation from either monitor will close containment ventilation isolation valves (Mode 6 only for particulate activity). These two monitors are not part of the Safeguards System and are not designed to meet the criteria of IEEE Standard 279.

Refueling Water Storage Tank Level

Unit 1 level instrumentation on the refueling water storage tank (RWST) consists of three channels. One channel provides a high level alarm to warn of an overflow condition, and a low level alarm. The second channel provides remote indication on the control panel, a low level backup alarm, a high alarm and a low-low level alarm. The third channel provides level indication.

Unit 2 level instrumentation consists of four channels. Two channels provide remote indication of high level, high level alarm signals and low level logic signals for semi-automatic switchover initiation. Two channels provide remote indication of level, low level alarm signals, low-low level alarm signals and low level logic signals for semi-automatic switchover initiation.

Emergency Core Cooling System Pump's Discharge Pressure

The discharge pressure for each of the safety injection pumps and the residual heat removal (RHR) pumps is indicated in one Control Room.

The common discharge header pressure for the charging pumps is indicated in the Control Room.

Pump Energization

The status (i.e., motor opened or closed) of each safeguards pump is indicated in the Control Room.

Valve Position

All ESF remote-operated valves have position indication on the control board to show valve limit position. Air-operated and solenoid-operated valves move in a preferred direction with the loss of air or power. Motor-operated valves fail as is upon loss of power.

The position of key valves in the ESF systems is also provided in a mimic fashion, according to safety function, on a vertical wall panel in the main Control Room.

Sump Instrumentation

The containment sump instrumentation consists of four level switches designed to operate in a post accident environment. The level light housings are located above any possible flooding level. The level switch lights and console lamp systems are located in the Control Room.

In addition to the above, the following local instrumentation is available.

1. RHR pumps' discharge pressure
2. Residual heat exchanger exit temperatures
3. Containment spray test lines total flow
4. Safety injection test line pressure and flow

7.3.1.1.9 Instrumentation Used during a Loss-of-Coolant Accident (LOCA)

Instruments which are designed to function for various periods of time following a major LOCA are those which govern the operation of ESF. Pressurizer pressure and level and steam

generator level sensors are located inside the containment because an equivalent signal cannot be obtained from a sensor location more isolated from the reactor. Steam flow is also measured inside the containment. Pressurizer pressure transmitters may be required to actuate ESF as a result of a LOCA.

It should be emphasized, however, that for the large loss-of-coolant incidents the initial suppression of the transient is independent of any detection or actuation signal because the water level will be restored to the core by the Passive Accumulator System.

The reactor vessel Level Microprocessor Instrumentation System utilizes three sets of differential pressure (d/p) cells. These cells measure the pressure drop from the bottom of the reactor vessel to the top of the reactor vessel, and from the top of the reactor vessel to the reactor coolant hot leg piping. The Differential Pressure Measuring System utilizes cells of differing ranges to cover different flow behavior with and without pump operation.

One pair of sensors provides an indication of the reactor vessel water level above the hot leg pipe when the reactor coolant pump in the loop with the hot leg connection is not operating. When any reactor coolant pump is operating, the instrument reading will display "INVALID."

A second pair of sensors (narrow range) provides an indication of reactor vessel water level from the bottom to the top of the vessel when no pumps are operating. The instrument will also measure the reactor core and internal's pressure drop. When any reactor coolant pump is operating, the instrument will display "INVALID."

The third pair of sensors (wide range) provides an indication of reactor core, internals, and outlet nozzle pressure drop for any combination of operating reactor coolant pumps. Comparison of the measured pressure drop with the normal, single-phase pressure drop will provide an approximate indication of the relative void content or density of the circulating fluid. The RVLIS-86 stores four valves of expected reactor coolant void fraction. These expected values correspond to one through four RCPs running. The expected value of void fraction corresponding to the current pump operating status is displayed on the RVLIS-86 remote display panels. When all pumps are off, the indicator displays "INVALID". This instrument will monitor core conditions on a continuing basis.

To provide the required accuracy for water level measurement, temperature measurements of the reference legs are provided. These measurements, together with the existing reactor coolant temperature measurements, are used to compensate the d/p transducer outputs for differences in system temperature and reference leg temperature, particularly during the change in the environment inside the containment structure following an accident.

All pumps used for safety injection and containment spray are located outside the containment. The operation of the equipment can be verified by instrumentation that reads in the Control Room. This instrumentation will not be affected by the accident.

Depending upon the magnitude of the LOCA, information relative to the pressure of the Reactor Coolant System (RCS) will be useful to the operator to determine which pumps will be used for recirculation in the event of a small break. The discharge pressure of the charging pumps, as

read on instrumentation outside the containment, will serve this purpose. The containment sump level and refueling water tank instrumentation will also provide information for evaluating the conditions necessary to initiate the recirculation mode of operation. See Section 6 for further details.

The RWST level instrumentation provides additional information to determine the relative size of a reactor coolant leak. Core recirculation and containment spray recirculation (if necessary) can be manually initiated before the RWST is empty.

Considerations have been given to all the instrumentation and information that will be necessary for the recovery time following a LOCA. Instrumentation external to the reactor containment, such as radioactivity monitoring equipment, will not be affected by this postulated incident and will be available to the operator.

7.3.1.1.10 Engineered Safety Features Control

All equipment required to keep the plant in a safe condition during the occurrences of safety injection, blackout, or both of these conditions, can be powered by three standby ac power systems per unit. The equipment is arranged such that safe shutdown can be achieved under all postulated abnormal conditions coincident with the loss of one diesel generator. Each unit has a separate and independent electrical system to provide power for Engineered Safeguards Systems.

Each diesel generator is provided with an independent loading Control System (Reference 2) which initiates the startup and/or loading of the diesel generators during the following plant conditions:

1. Safety injection only
2. Loss of all outside power (blackout)
3. Safety injection coincident with loss of all outside power
4. Safety injection coincident with undervoltage on the one 4 kV vital bus

During conditions of automatic startup and/or loading for all modes, the following criteria have been met in the Control System design:

1. Each vital bus control is independent of the other two.
2. Manual control of equipment is locked out until the automatic load sequencing is complete.
3. Safeguard actuation signals cannot be interrupted by any automatic device.
4. Manual initiation of the loading sequence is available to the operator.

5. Off-normal diesel conditions are alarmed in the Control Room.

6. Safety injection conditions take precedence over all other operating modes.

7. Diesel operating in a TEST mode at the occurrences of a blackout or safety injection, the diesel output breaker is automatically tripped open. The diesel is then reloaded according to prevailing conditions.

8. No sequential loading can occur until the diesel generator ACB is closed onto the bus.

9. Inadvertent tripping of the diesel generator output breaker is precluded by locking out the shutdown relay when a safeguard initiation signal is present.

7.3.1.1.10.1 Safety Injection Only

In this mode of operation, a safety injection signal initiates the following actions:

1. Start diesel generator units.

2. Lock out manual control of equipment circuit breakers until the loads are connected.

3. Connect all required accident loads.

Since outside power is available during this mode, the equipment not affected by the accident remains in service and required safeguards equipment is loaded immediately, except for the fan cooler units which are started for low speed operation as soon as they have coasted down from normal high speed operation (approximately 15 to 20 seconds). The diesel generators are started automatically so as to be available in the event they are subsequently required. They are not automatically connected to the vital busses. The operator may shut down the diesels when operation of the required equipment has been verified.

7.3.1.1.10.2 Blackout Only

In this mode of operation, a 70% undervoltage signal from each vital bus is combined in a two-out-of-three logic matrix per bus to develop a blackout loading signal for that bus. The blackout signal and the associated Control System perform the following functions on each bus:

1. Trip all 4160 V and selected 460 V vital bus breakers.

2. Start the diesel generator.

3. Lock out manual control of bus loads until diesel generator loading is completed.

4. Connect the diesel generator to its bus.

5. Sequence the required blackout loads provided that an accident has not occurred and the diesel generator is ready to accept load.

During this mode of operation, manual control of individual circuit breakers is prevented until the automatic loading is completed. After a time delay has elapsed, the operator can manually reset the loading sequence signal and restore manual control.

7.3.1.1.10.3 Safety Injection Plus Blackout

This mode of operation differs from that of safety injection only in that circuit breakers of safety equipment cannot be closed until the diesel is ready to accept loads. These breakers are then closed sequentially.

The necessary logic required to recognize the existence of this mode is comprised of the coincidence of safety injection and blackout signals. This signal will trip selected 460 V and all 4 kV vital bus breakers.

Manual control of the individual loads is prevented by a time delay until diesel generator loading is complete. At that time, the loading sequence control can be reset and capability for manual control is restored.

The safeguards equipment required during an accident and blackout are automatically sequenced to start by the Safeguards Equipment Control (SEC) System. This is discussed further in Section 8.

The starting of the containment spray pumps requires a high-high containment pressure signal in addition to the SEC actuation signal. The containment spray pumps will normally start approximately 20 seconds following an accident. If the pumps do not start at the required sequence time, the SEC actuation signal will be delayed until the end of the loading sequence to prevent the spray pumps from starting when other equipment is required to start. The LOCA break sizes analyzed in Section 15 will result in the containment high-high pressure signal ("P" signal) before the SEC actuation signal calls upon the spray pumps to start. Break sizes which do not result in a "P" signal prior to the pump start initiation will result in a peak containment pressure at the end of the spray pump lockout period considerably lower than for the situations analyzed in Section 15. The postulated spray pump delay has no adverse effect on the safety of the plant and is not a controlling factor relative to maximum containment pressure design analyses.

The topics discussed in NUREG-0138 were addressed in a meeting with USNRC Region 1, Inspection and Enforcement personnel, prior to the startup of Salem Unit 1. The meeting resulted in a modification to the LOCA Emergency Instruction which requires the plant operating personnel to restart LOCA loads in the event of a loss of offsite power subsequent to reset of the safety injection signal. This procedure change is applicable to Unit 2 and it adequately addresses the positions taken by the NRC in NUREG-0138.

7.3.1.1.10.4 Safety Injection Plus One 4 kV Vital Bus Undervoltage

In this mode, the bus undervoltage signal is derived from the same group of relays which are used for the blackout signal logic matrices.

If an accident were to occur in coincidence with a single bus undervoltage condition, the following functions are performed by the controller:

1. Start the diesel on the affected bus.

2. Trip all vital bus equipment breakers.

3. Sequence the accident loads when the diesel is ready for loading.

4. Lock out manual control of breakers on the affected bus until diesel generator loading is complete.

7.3.1.1.10.5 Sustained Degraded Vital Bus Voltage (Degraded Grid)

The safeguards controllers also receive 95.1-percent (94.6% by technical specifications, the difference is relay calibration range) undervoltage signals from their respective vital buses through a 13-second time delay relay in order to provide a two-out-of-three logic intelligence. Upon completion of the logic, the affected vital bus is separated from the offsite source and loaded onto its associated emergency diesel generator. The loading sequence is identical to that of the blackout sequence.

7.3.1.1.10.6 Tests and Inspections

The Emergency Power Control System is provided with means to:

1. Check the operational capability of each input sensor during reactor operation,

2. Check that the logic combinations of input signals result in proper logic outputs or control system actions for each mode of operation,

3. Permit any one sensor to be maintained, tested or calibrated during power operation without initiating system action, and

4. Assure that when tests are completed the system is returned to its proper operational state.

7.3.1.2 <u>Design Bases</u>

7.3.1.2.1 General Design Criteria

Criterion: Protection systems shall be provided for sensing accident situations and initiating the operation of necessary ESF.

The ESF instrumentation monitors parameters to detect failures and to initiate ESF equipment operation.

The ESF instrumentation measures temperatures, pressures, flows, levels in the RCS Steam System, Reactor Containment and Auxiliary Systems. It actuates the ESF and monitors their operation. Process variables required on a continuous basis for the startup, operation, and shutdown of the unit are indicated or recorded and controlled from the Control Room. The quantity and types of process instrumentation provided ensure safe and orderly operation of all systems and processes over the full operating range of the plant.

Certain controls and indicators which require a minimum of operator attention, or are only in use intermittently, are located on local control panels near the equipment to be controlled. Monitoring of the alarms of such control systems is provided in the Control Room. Design criteria for redundancy, separation and diversity are essentially the same as those used for the Protection System, and described in Sections 7.1, 7.2 and Section 8.

7.3.1.2.2 Environmental Capability

The ESF instrumentation equipment inside the containment is designed to operate under the accident environment of a steam-air mixture and radiation.

Electrical equipment for the ESF is located inside the containment and in the Auxiliary Building. Table 7.3-2 is a listing of the equipment inside the containment which is required for post-LOCA operation and indicates how long the equipment is required to function as well as specifying which components require qualification testing.

Failure of the equipment in Table 7.3-2 after the specified time will not increase the severity or consequence of the accident.

The reactor protection control and instrumentation equipment and electrical equipment for ESF located in the Auxiliary Building will operate in a normal ambient environment following a major LOCA.

7.3.2 System Evaluation

Redundant instrumentation has been provided for all inputs to the protective systems and vital control circuits. Where wide process variable ranges and precise control are required, both wide range and narrow range instrumentation are provided. Instrumentation components are selected from standard commercially available products with proven operating reliability. The instrument power to electrical and electronic instrumentation required for safe and reliable operation is supplied from the four instrument busses which can be energized from the diesel generator sources.

The Engineered Safeguards Initiation, Control, and Power Supply Systems are designed so that no single fault in components, units, channels or sensors will prevent ESF operation. The timing of initiation and startup of the ESF is such as to provide conservative protection.

The wiring is grouped so that no single fault or failure, including either an open or shorted circuit, will negate ESF operation. Wiring for redundant circuits is protected and routed independently so that damage to any one path will not prevent the protective action.

The detailed design incorporates the following characteristics in order to counteract faults resulting in loss of power:

1. Redundant components are powered from separate busses,
2. The 125 V dc and 110 V ac power busses used are discussed in detail in Section 8,
3. The 4160 V and 460 V systems are discussed in Section 8,
4. The starting and loading of diesel generators is described in Section 7.3.1.1.10.

7.3.2.1 Pressurizer Pressure

Credible accident conditions requiring emergency core cooling would involve low pressurizer pressure. The present design for emergency core cooling is accomplished by the SIS actuation from primary system variables. Actuation is initiated by low pressurizer pressure.

Pressurizer pressure is sensed by fast response pressure transmitters. An overall 1-second pressure channel response time, as used, is more than adequate to cover the response characteristics of the tripping channels.

Instrument delays are small in comparison with the computed lag in pressurizer pressure, which lags behind the reactor coolant pressure during blowdown.

A safety injection block switch is provided to permit the primary system to be depressurized, such as for refueling operations without actuation of the SIS. This manual block switch will be interlocked with pressurizer pressure in such a way that the blocking action will automatically be removed as operating pressure is approached. If two-out-of-three pressure signals are above this preset pressure, blocking action cannot be initiated. The block condition will be indicated by a status light in the Control Room.

7.3.2.2 Motor and Valve Control

For starting pump and fan motors, the control relays are energized to energize the closing coil on the circuit breaker or the motor starter. When motor starters are used the starter operating coil will be supplied by power from the same source as the subject motor. When circuit breakers are used for motor control the circuit breakers close and trip coils will be supplied by power from a 125 V dc battery bus.

For valve motor control, the control relay causes the coil on the main contactor for the closing circuit to be energized.

Air-actuated containment isolation valves are spring loaded to close upon loss of air pressure.

7.3.2.3 Manual Control of Engineered Safety Features

Manual control of ESF equipment from the main control console is achieved through the use of a 28 V dc logic interface system.

The manual control system is comprised of four groups of logic cabinets, terminal cabinets, and wiring to the main control console. The console contains the back-lighted push-button stations used to initiate a control action. A momentary contact energizes the relays in the logic cabinets, which in turn cause the desired system action in the primary control circuit (115 V AC or 125 V DC). The output contacts of the logic relays are wired to the terminal cabinets and then out to the field equipment control centers.

Power for logic relays is provided by the two 28 V batteries. This is the supply voltage which appears across the contacts of the console pushbuttons. Wiring between the console and the logic cabinets consists of Teflon insulated plug-in cables.

This system is used to manually initiate protective functions such as reactor trip, containment isolation, and containment spray. IEEE Standard 279-1971, Paragraph 4.17, is applicable to these functions. The 28 V control system meets the requirements of Paragraph 4.17. All automatic operation of the ESF equipment does not require any action in the 28 V circuitry.

7.3.2.4 Testing

The method of periodic testing of ESF instrumentation, control equipment, and ESF actuator testing is discussed below.

The discussions of system testability in Section 7.2 are applicable to the sensors, analog circuitry, and logic trains of the ESF Actuation System. The following information describes those areas in which the testing provisions differ from those for the Reactor Trip System.

The ESF Systems are periodically tested to provide assurance that the system will operate as designed and will be available to function properly in the unlikely event of an accident and/or loss of offsite power. With the adoption of “Risk Informed Method for Control of Surveillance Frequencies” per NEI 04-10, the Surveillance Test frequency requirements have been moved from the Technical Specifications to the Surveillance Frequency Control Program (SFCP). The testing program includes:

1. Prior to initial plant operations, ESF System tests will be conducted.

2. Subsequent to initial startup, ESF System tests will be conducted in accordance with the Surveillance Frequency Control Program (SFCP).

3. During online operation of the reactor, the ESF analog and logic circuitry will be tested. In addition, essentially all of the ESF actuators will be tested. The remaining few final actuators whose operation is incompatible with online plant operation will be partially tested.

4. During normal operation of testable final actuation devices, the ESF Systems will be tested by manual initiation.

During reactor operation the basis for ESF Actuation System acceptability will be the successful completion of the overlapping tests performed on the Reactor Trip and the ESF Actuation Systems.

Analog checks verify operability of the sensors. Analog checks and tests verify the operability of the analog circuitry from the input of these circuits up to and including the logic input relays. Solid state logic testing checks the digital signal path from the logic input relay contacts through the logic matrices and master relays and performs continuity tests on the coils of the output slave relays; final actuator testing operates the output slave relays and verifies operability of those devices which require safeguards actuation, and which can be tested without causing plant upset. A continuity check is performed on the actuators of the untestable devices. Operation of the final devices is confirmed by control board indication and visual observation of the devices.

Maintenance checks (performed during regularly scheduled refueling outages), such as resistance to ground or signal cables in radiation environments, are based on qualification test data which identify acceptable radiation, thermal degradation, etc.

Considered in the design are:

1. Testing shall minimize the potential for accidental shutdown of the unit or initiation of emergency core cooling.

2. Test circuitry shall be designed to maintain overall reliability of the Engineered Safeguards Systems.

The operation of the ESF includes function of both the Solid State Protection System (SSPS) and the Safeguards Equipment Controller. The test provision for the SSPS is described below.

<u>Description of Initiation Circuitry</u>

Initiating relays are provided for the following systems or functions in each of the two trains of the SSPS:

1. Safety Injection

2. Containment Isolation Phase A

3. Containment Isolation Phase B

4. Containment Spray

*5. Containment Ventilation Isolation

6. Main Steam Line Isolation

7. Main Feedwater Line Isolation

8. Safeguards Equipment Control (one for each diesel generator unit)

The output of the initiation circuits each consists of a master relay which drives slave relays for contact multiplication. The logic, master, and slave relays are mounted in cabinets designated Train A and Train B, respectively, for the redundant counterparts. The slave relay circuits operate some circuit breakers, motor-operated valves and solenoid-operated valves.

Actuator Testing

After testing of the initiation circuits in the SSPS and SEC has been accomplished, the SSPS master relays can be reset for testing of the slave relays and the devices controlled by their contacts. By operation of these relays one at a time, all breakers and valves that can be operated online are tested.

Breakers and valves are assigned to the slave relays such that no undesired effect on plant operation can occur. Controls mounted in a Solid State Protection Test Panel are used for actuator testing. Separate panels are used for the A and B Trains. A four-position selector switch permitting rotation in one direction only is used to test all SSPS output relays. Turning the switch to the first-position blocks those outputs which cannot be tested with the plant at power. This blocking is accomplished by latch-type test relays in the test panel. For those outputs where blocking is not required, this position is not used.

When the switch is moved to the second position, the output relay is activated. For those circuits with no blocking, the field devices function and are tested. For those circuits that are blocked, the test relay places a built-in "press-to-test" indicator light in series with the field device. Due to the low current, the field device does not operate. For normally closed output relay contacts, the test relay switches a bypass contact around the output relay contact. Current flow is determined by reading the voltage drop across small resistors in series with the normal and bypass contacts (maximum drop = 1 V).

Position 3 resets the output relay. The test lights or resistors are used to verify contact resetting. Final Position 4 resets the test relay. Again, the test lights or resistors verify that the test relay has reset. Whenever a test switch is out of Position 4 or a test relay is latched, an SSPS test alarm is activated in the Control Room.

---

*NOTE: For Containment Ventilation Isolation from a RMS input, the initiating relays drive the slave relays directly. The logic circuits and master are not used for this function.

The method of using a four-position test switch and lights or resistors for verifying field device continuity permits testing without activating the field device and verifies that the system has been reset and is in the same state as before testing. Depressing the test light lens holder breaks the normal circuit and makes up a test circuit such that the lamp can be checked instantly.

Administratively, only one test switch is operated at a time so only one SSPS output relay is tested.

During output testing, close communication between the main Control Room operator and the man at the test panel is maintained.

Prior to operating a slave relay, the operator in the main Control Room assures that plant conditions will permit operation of the equipment that will be actuated by the relay. After the tester has actuated a slave relay the main Control Room operator observes that all equipment has operated properly. Prepared check lists are used to verify proper operation and keep a permanent record of tests. By means of the procedure outlined above, all equipment actuated by Engineered Safeguard System initiation circuits (with the following list of exceptions) is operated by the test circuitry:

1. Feedwater Isolation Valves
2. Main Steam Isolation Valves
3. Control Air Isolation Valves
4. Turbine Trips
5. Steam Generator Feedwater Pump Turbine Trip
6. Steam Generator Feedwater Pump Stop Valves
7. Reactor Coolant Pump Trip
8. Auxiliary Feedwater Pumps
9. Generator Trip
10. Safety Injection System Valves ISJ1, 1SJ2, 1SJ4, 1SJ5, 1SJI2, 1SJ13
11. Chemical and Volume Control System Valves 1CV40, ICV41, 1CV68, 1CV69, 1CV116, 1CV284, ICV7
12. Reactor Coolant Pump Seal and Thermal Barrier Cooling Valves 1CC117, 1CC118, 1CC131, 1CC136, 1CC187, 1CC190

13. Containment ventilation isolation: VC1, VC4, VC5 and VC6. There is no test circuit for the RMS input function.

The method described provides capability for checking from the process signal to the logic cabinets and from there to the individual field equipment including all field cabling actually used in the circuitry. For those devices whose operation could have an effect on plant stability, the procedure provides for checking from the process signal to the logic rack and continuity determination for output cables and field devices; however, the actuated equipment will be manually initiated as plant conditions permit.

The SEC units have the following test capability during power operation:

1. Check the operational capability of each bus undervoltage sensor and its input to the logic.

2. Check the operational capability of the LOCA signal, "S", from the SSPS logics.

3. Check that the logic combinations of input signals result in proper operation of the various functions, including automatic load sequencing, without actuation of any motors and a verification of the timed loading sequence.

4. Check the output relay capability to actuate the driven equipment.

The SEC units can also be checked for complete system operability from sensor to actuated equipment during refueling outages. The test frequencies for both online and outage testing are controlled by the Surveillance Frequency Control Program (SFCP).

Reactor Trip System and ESF actuation system response time tests are required by and will be performed in accordance with the SFCP.

7.3.2.5 Containment Flooding Analysis

The analyzed flood level within the containment following a major LOCA is set at Elevation 84 feet-0 inch (PS Datum). Table 7.3-3 lists all electrical components which are in the containment at or below Elevation 84 feet-0 inch and may be subjected to the effects of flooding. This list includes both safety-related and non-safety-related components and distinguishes between vital circuit (Class 1E) and non-vital circuit association. In addition there are some temperature elements which were not listed which may become flooded. These devices, however, do not perform a safety function, but are used for computer or annunciator alarms and will not have any effect on vital circuits or the safe operation of the plant following a LOCA.

Safety Significance

An analysis has been performed on the safety significance of the failure consequences of vital circuits due to postulated flooding. Submerged circuit components were examined for function and whether the function was required for the accident and performed prior to flooding. Tables

7.3-4, 7.3-5, 7.3-6 and 7.3-7 present the results in tabular form of the detailed analysis for 125 V dc circuits, 115 V ac circuits, 230 ac control center circuits and junction/terminal boxes, respectively. A detailed analysis of non-vital circuits is not required since their failure or improper operation will not affect the safety functions necessary for a LOCA incident.

The analysis demonstrates that the safety functions required for an accident will be performed. Containment isolation and accumulator pressure monitoring were found to be the major safety functions required and were not adversely affected by the flooding before the functions were performed.

Air-operated containment isolation valves required to close on an isolation signal are signaled to close prior to significant flooding and, except for 11, 12, 21 and 22CA330, close upon loss of power. In general, the flooding could cause short circuits, thereby tripping the control circuit breaker open and assuring that the safety function is performed. The CA330's are on the control air system supply headers, and fail-as-is on loss of vital DC power. They are located outside containment, and are above the maximum calculated containment flooding elevation. Motor-operated isolation valves also perform their function prior to flooding.

Indication of isolation valve position has been determined not to be of safety significance because the valves will have performed their function prior to flooding, and the closed status of the valves will be indicated before flooding can cause a trip of the circuit breaker and subsequent loss of the indication. If this occurs, alarms are provided to indicate loss of the control circuit. The circuitry design assures that loss of power would not result in loss of the containment isolation function. The failure of isolation valve indication resulting from flooding is therefore considered to be of no safety significance.

The accumulator pressure monitoring function will be available for the five minutes that it is required. The instruments are located at approximately Elevation 82 feet and will not become flooded until after they have performed their function.

The loss or improper operation of other instrumentation will not affect the operator's response to post accident conditions since they are neither required for the accident nor for post accident monitoring.

Effect on Class 1E Sources

Class 1E electrical power sources will not be adversely affected by the flooding of individual electrical circuits because of the circuit protection provided. Circuit protection for those items affected by the flooding is indicated in the tables for each circuit analysis.

Each 125 V dc circuit is protected by Class 1E, 15 amp circuit breakers which will trip open if short circuits are caused by the flooding of components in the containment. Power to the entire circuit would be lost. All components on the if their loss was acceptable.

Each 115 V ac circuit providing power to the process group racks and protection racks is also protected by Class 1E, 15 amp circuit breakers. However, in this case the entire circuit will not be lost due to flooding of components in part of the circuits. Each individual process or

protection control/indication loop is provided with its own fuse protected power supply. The development of faults from flooding of components in the loop would blow the fuses and thereby isolate that portion of the circuit. Other functions powered from that particular circuit would not be affected.

In the analysis of 115 V ac circuits only those devices which would become submerged were examined as to function and need. Non-submerged components of the circuit will not be affected by the flooding. In the case of submerged devices in the 115 V ac circuit, it may be possible that total loss of control power will not occur, and that some control loops would provide anomalous indication or control. This has been examined and those devices which are required to operate properly do so for the required time period prior to submergence. Once submerged their functions are not required, and any improper operation would not be detrimental to the necessary safety functions following a LOCA.

Each 230 V motor control center circuit is provided with Class 1E circuit breakers. The control circuit power developed from a 230/115 V transformer is protected by fuses. Any isolation valves will have performed their function prior to becoming submerged. The reactor nozzle support vent fans are tripped during an accident. These power circuits are protected during flooding conditions since voltage to the devices is removed by open motor starter contacts.

Design Changes

During the course of the review two instances were discovered which required a redesign to assure that the Emergency Core Cooling Systems can be operated effectively. They are described below:

1. Position interlock circuits for valves 1SJ67 and 1SJ68, although not flooded, were found to be on 125 V dc circuits which are affected by the flooding of other components. The position interlock circuit of 1SJ67 was on circuit 13 of the 1CCDC distribution cabinet and the position interlock circuit of 1SJ68 was on circuit 13 of the 1AADC distribution cabinet. Coincident flooding of components in portions of the circuits could trip the circuit breakers, thereby losing the interlock capability for opening 11SJ45 and 12SJ45. The power circuit for the 1SJ67 and 1SJ68 position interlocks was changed to circuits which cannot be affected by flooding.

2. The containment sump level instruments provide backup indication for initiating the recirculation phase of an accident and are above the flood level. However, two junction boxes, JN106 and JN108, used for the routing of the indication circuits, were located below the flood level. This situation could have caused anomalous indication to the operator and possibly affected his response to accident conditions. These two junction boxes were raised above the flood level.

In summary, with incorporation of the design changes, the entire analysis demonstrates that flooding within the containment will not adversely affect the safe operation of the plant following a LOCA even though a number of vital circuits and non-vital circuits could be lost. The necessary safety functions will be performed.

7.3.2.6 Single Failure of Components

There are no single electrically operated fluid system components whose failure within the single failure criterion could result in the loss of capability of the Emergency Core Cooling System (ECCS) to perform its safety function. In order to achieve this, design changes were incorporated for certain manually controlled electrically operated valves. These changes are illustrated for typical valves on Figures 7.3-2, 7.3-3 and 7.3-4 and are described below.

Figure 7.3-2 illustrates the design provided for valves which have motive power "locked out" at the 230 V motor limit switches which provide redundant position indication as described in Section 7.6.2. All valves with this design are provided with a separate 125 V dc supply to provide power for control board position indication which would normally be unavailable due to the "power lockout."

Figure 7.3-3 illustrates the design provided for valves whose control power can be restored from the Control Room. The design incorporates a switch which isolates the operating coil of the motor starter which could cause spurious movement to the undesirable valve position. The switch is monitored by a light which would indicate failure of the switch to provide isolation, and by a separate light which gives positive indication that the motor is "locked out." Similar to the other valves previously described, these valves are provided with a separate 125 V dc supply for control board position indicating lights.

Figure 7.3-4 illustrates the design which provides the same design functions as Figure 7.3-3. The additional interposing relay 95/C, 95/O and aux. relay 43x are utilized due to the large in rush current for valves with size 3 starters. This is to ensure that sufficient control voltage is available to 9/C and 9/O starter coils during a degraded grid voltage condition.

7.3.2.7 Electrical Interlocks

Electrical interlocks are provided in the control circuits of several redundant ECCS valves. These interlocks assure that the proper sequence of operations occurs when switching to the recirculation phase of a LOCA. The interlocks also serve to prevent unacceptable system lineups during normal plant operations. All of the interlocks use redundant devices to prevent single failures from either defeating the ECCS safety function, or the operational restrictions during normal power operation. In addition to the interlock circuitry, some of the valves are provided with control "power lockout" to meet other criteria and are described below along with an assessment of the effects of failures in the circuits.

Valves 1CV40 and 1CV41

These valves are located in the normal suction line to the charging pumps. The closing of these valves requires opening of either 1SJ1 or 1SJ2 (charging pump suction lines from the RWST) to assure that the charging pumps do not lose suction. The normal operation of the interlocks requires 1SJ1 or 1SJ2 to be fully open prior to initiating closure of the 1CV40 and 1CV41 valves. If either interlock were to fail in the direction allowing premature closure of 1CV40 or 1CV41 during a LOCA, suction to charging pumps would not be lost since 1SJ1 and 1SJ2 would be opening at the same time. This simultaneous operation of all four valves occurs since "S"

signals from the plant Protection System would be transmitted to the valve control circuits simultaneously. The devices used to develop the interlock circuits are redundant. If either interlock were to fail in the direction which would prevent closure of the 1CV40 or lCV41 valves, the redundant interlock would function to close the valves.

Valves 11RH4 and 12RH4

These valves are located in the suction lines to the No. 11 and 12 RHR pumps, respectively. The opening of each valve is enabled by the closed condition of its respective containment sump isolation valve (11SJ44 interlocks 11RH4 and 12SJ44 interlocks 12RH4). The normal status of 11RH4 and 12RH4 is "open" and ready for the injection phase of a LOCA. The interlocks are arranged on a "Train" basis so that no possible interconnection of the interlocks can occur. A failure of either interlock would affect only the opening circuit of the RH4 valve associated with that interlock. The required safety function of the RH4 valves is to be closed for Unit 1 and closed after the SJ44 valves are full open for Unit 2 when initiating the recirculation phase of a LOCA. The closure of an RH4 valve cannot be defeated by any failure in the interlocking circuitry (i.e., an opening permissive from the SJ44 valve interlock would not cause automatic opening of RH4 nor would it prevent closure of RH4).

Valves 11SJ44 and 12SJ44

Unit 1 and 2 manual mode:

These are the containment sump valves which provide suction to the RHR pumps during the recirculation phase of a LOCA. The opening of each valve is enabled by the closure of its respective RH4 valve. The normal status of these valves is "closed" with control power "locked out" in the Control Room. Unit 2 control power “locked out” feature was removed to facilitate automatic opening of the sump valves upon receipt of a switchover sequence signal.

The purpose of the interlock is to assure that spurious opening of the valve will not result in emptying the RWST into the containment sump. The interlocks are fully independent on a "Train" basis so that failures could affect only one RHR pumping path. The required safety function of these valves is to open when initiating recirculation after the RH4 valves have been closed.

A failure of the interlock in a manner tending to prematurely open an SJ44 valve would have no consequence since a valve open position must be selected by an administratively controlled SJ44 hand switch. A failure of the interlock in a manner which prevents opening the sump valve is acceptable since the other pumping path would not be affected by this interlock failure.

Unit 2 semi-automatic mode:

When the semi-automatic mod is selected for Unit 2 the containment sump valve opens when a RWST low level occurs, bypassing the closure of the RH4 valve. The RH4 valves will remain open during opening of SJ44 ensuring RHR pump suction at all times. Once the SJ44 valve is fully open its respective RH4 valve automatically closes, fulfilling the interlock purpose of not

emptying the RWST into the containment sump. The semi-automatic mode is fully independent on a “Train” basis so that failures could affect only one RHR pumping path.

The required safety function of these valves is to open when initiating recirculation and to provide closure permissive to the RH4 valves.

A failure of the interlock in a manner tending to prematurely open an SJ44 valve would have no consequence since two out of four RWST low level logic signals must also occur. A failure of the interlock in a manner which prevents opening the sump valve is acceptable since the other pumping path would not be affected by this interlock failure.

Valves 1SJ67 and 1SJ68

These are the safety injection pump miniflow line valves which allow flow back to the RWST. The valves are both normally open with the control power "locked out" in the main Control Room to assure that the safety injection pumps have a flow path until RCS pressure falls below the shutoff head of the pumps. These valves are to be closed when transferring to the recirculation phase of a LOCA. The opening of either valve is enabled by the "closed" condition of valves 11SJ45 and 12SJ45. The closing of these valves is not interlocked.

A failure of the interlock circuitry tending to open the valve would have no consequence because the normal position of the valve is open, and it also has control power "locked out." The interlock circuitry could not fail in a manner which would automatically open the valve or prevent its closure. If the interlock were to fail subsequent to the valve's being closed for recirculation, only one of the valves could be affected by the failure. The valve affected in this case would not open unless the operator erroneously initiated an "open" signal from the main control console. Even if this were to occur, the redundant valve would remain closed.

Valves 11CS36 and 12CS36

These valves are opened in the recirculation phase of a LOCA to provide flow to the containment spray headers from the RHR system. The normal position of the valve is "closed" and opening requires the opening of its associated containment sump valve (11SJ44 interlocks 11CS36 and 12SJ44 interlocks l2CS36) and the closure of either 1RH1 or 1RH2 (the normal RHR cooldown path from the RCS). The devices used to develop the interlocks are redundant so that any interlock failure would affect only one of the CS36 valves.

Interlock failures tending to prevent opening of the valve can affect only one pumping path; the other path would provide the safety function. Interlock failures which would tend to open a valve prematurely are acceptable since such failures alone are not sufficient to open the valves (operator action is required in addition to fulfilling the interlock requirements).

Valves 11SJ45 and 12SJ45

These valves are used in independent piping loops during the recirculation phase of a LOCA to provide suction to the high head pumps from the RHR pumps. The required safety function of these valves is to open. Each valve's opening circuitry is enabled by the closure of either 1RH1

or IRH2, the opening of its associated sump valve (11SJ44 interlocks 11SJ45; 12SJ44 interlocks 12SJ45), and the closure of either ISJ67 or 1SJ68. The devices used to develop these interlocks are redundant such that any interlock failure affects only one valve.

Interlock failures tending to prevent opening of the valve can affect only one pumping path; the other path would provide the safety function. Interlock failures which would tend to open a valve prematurely are acceptable since such failures alone are not sufficient to open the valves (operator action is also required).

The circuits for valves 1SJ67 and 1SJ68 which provide the opening interlock for valves 11SJ45 and 12SJ45 have been moved to 125 V dc circuits not affected by containment flooding following a LOCA.

Valves 11SJ49 and 12SJ49

These valves are used to discharge RWST water from the RHR pumps to the Reactor Coolant System during the injection phase of a large break LOCA. In the injection phase these valves are not redundant and it is required that flow be injected into three of the four cold legs (one leg is assumed to dump to the floor). During the cold leg recirculation phase, the SJ49's are redundant, since only one valve is required to close to provide containment spray.

The control power lockout scheme was modified on these valves, as shown in Figure 7.3-4, due to voltage drop considerations during a LOCA with a degraded grid condition, which was not low enough to separate the station from the offsite power source. These valves and the SJ54 valves were susceptible to this problem due to the large contractor size and the extended cable lengths. Since the SJ49 has the requirement for restoring power from the control room during an accident condition within approximately one hour of the accident starting time, the use of interposing relays has in the new circuit design resolved the problem in a degraded grid condition and the single failure criterion.

7.3.3 References for Section 7.3

1. Katz, D. N., "Solid State Logic Protection System Description," WCAP-7488-L (Proprietary), January 1971 and WCAP-7672 (Non-Proprietary), June 1971.

2. "Technical Manual - Control Electronics Unit (CEU) and Test Panel," Eaton document TM7N306 (PSBP #314197).

Parameter	Transmitter Sensors	Read-out	Power	Prot/Safeguards Use	Taps
Reactor Coolant Temperature	8 RTDs	C.B. Meter	Ext.	Δ trips, T_{avg} permissives	1 each
Pressurizer Pressure	4 Transmitters	C.B. Meter	Ext.	Hi/Lo Pressure Trips, SIS	3 (Top Level) One Shared
Pressurizer Level	3 ΔP Transmitters	C.B. Meter	Ext.	R.T.	3 (Top Level) 3 (Bottom Level)
Steam Flow	8 ΔP Transmitters	C.B. Meter	Ext.	SIS	1 Pair Each
Steam Pressure	12 Transmitters	C.B. Meter	Ext.	SIS, Steam Line Isolation	1 Each
Steam Generator Level	12 ΔP Transmitters	C.B. Meter	Ext.	Low Level trip	1 Pair Each
Reactor Coolant Flow	12 ΔP Transmitters	C.B. Meter	Ext.	Low Flow trip	1 High Pressure Shared/Loop 1 Low Pressure Each
Containment Pressure	4 Transmitters	C.B. Meter	Ext.	SIS (3) Spray (4) Cont. Isol.	4
Turbine Steamline Inlet Pressure	2 Transmitters	C.B. Meter	Ext.	Set Point Programs and Turbine Power Permissives	1 Each

*C.B. is Control Board

Equipment Name and Tag Number	Operating Mode	Duration of Operation	Environmental Testing
CATEGORY I – INSTRUMENTATION			
Pressurizer pressure channels: PT-455, 456, 457, 474	Continuous	1/2 hr (SI initiation)	Required
Pressurizer level channels: LT-459, 460, 461	Continuous	1/2 hr	Required
Accumulator pressure channels: PT-936A,B,C,D, 937A,B,C,D	During injection phase	1 hr	Required
Containment sump level channels: LT-938, 939	Continuous	Available to 1 year	Not required
Containment sump level channels: LD-20255 and LD-20256	Continuous	Available to 1 year	Required
CATEGORY II – VALVES			
Containment sump isolation valves: MOV-8982A,B (11SJ44, 12SJ44)	Continuous	Within 1/2 hr after accident	Required
Accumulator isolation valves: MOV-8808A,B,C,D (11SJ54, 12SJ54, 13SJ54, 14SJ54)	During injection phase	1/2 hr minimum	Required
CATEGORY III – MISCELLANEOUS ITEMS			
Fan cooler motors	Continuous	Available for 1 year	Required
Safeguard equipment power, control, and instrument cable	Continuous	Available for 1 year	Required

Vital Circuits	**Nonvital Circuits**
1. Motor-Operated Valves	
1CV284, 1CC187, 1CC190, 1RH2, 1RH26, 12SJ54, 13SJ54, 14SJ54	
2. Panel Mounted Instruments	
Panel 232 - PT187, LT470, PT472, SV421, SV422, SV424	Panel 232 - FIC616, SV439, SV931
Panel 233 - PT936A, PT937A, LT934A, LT935A, SV229, SV230, SV231, SV232, SV233	Panel 233 - SV530
Panel 234 - PT936B, PT937B, LT934B, LT935B, SV234, SV235, SV236, SV237, SV238	Panel 234 - SV531
Panel 235 - PT936C, PT937C, LT934C, LT935C, SV239, SV240, SV241, SV242, SV243	Panel 235 - SV532
Panel 236 - PT936D, PT937D, LT934D, LT935D, SV244, SV245, SV246, SV247, SV248	Panel 236 - SV533
Panel 237 - PT188	Panel 237 - FIC613, SV437
Panel 238 - SV486, SV487, SV488, SV489, SV490, SV491, SV492, SV493	
Panel 240 - PT183, SV444	Panel 240 - FIC622
Panel 241 - PT186, PT121, SV115, SV751, SV757, SV758, SV772, SV773, SV774, SV399, SV397, SV394, SV401, SV518 SV519, SV520, SV521, SV498, SV499, SV500, SV442, E/P(INT35), E/P(ICV132)	Panel 241 - FIC619, SV441, SV528, SV526, SV523, SV522, SV529, SV527 SV525, SV524
3. Valve Limit Switches	
Control Valves - 1SJ63, 1SJ123, 1SJ158, 1SJ159, 1SJ163, 1SJ166, 11SJ20, 11SJ27, 11SJ50, 11SJ57, 11SJ162, 12SJ20, 12SJ27, 12SJ50, 12SJ57, 12SJ162, 13SJ20, 13SJ27, 13SJ57, 13SJ58, 14SJ20, 14SJ27, 14SJ162 1SS103, 1SS104, 1SS107, 1SS110, 1PR14, 1PR17, 1WL7, 1WL98, 1CV2, 1CV3, 1CV4, 1CV5, 1CV75, 1CV77, 1CV79, 1CV114, 1CV131, 1CV132, 1CV134, 1CV277, 1CV278	Control Valves - 1RC4, 11SS93, 12SS93, 13SS93, 14SS93, 11SS26, 12SS26, 13SS26 14SS26, 11SS32, 13SS32, 1FP85, 1FP90 1FP91, 1FP94
Motor-Operated Valves - 1CV284, 1CC187, 1CC190, 1RH2, 1RH26, 12SJ54, 13SJ54, 14SJ54	

Vital Circuits	**Nonvital Circuits**
4. Miscellaneous and Local Mounted Instruments	
No. 11-14 Reactor Nozzle Support Fans, Triaxial Accelerometer (Seismic Instrument - Unit 1 only) FIT159A, FIT159B, FIT158A, FIT158B, FIT157A, FIT157B, FIT156A, FIT156B, SV506, PA7693	No. 11 Containment Sump Pump No. 12 Containment Sump Pump No. 1 Reactor Sump Pump No. 11 Reactor Coolant Drain Tank Pump No. 12 Reactor Coolant Drain Tank Pump FIC166, FIC171, FIC172, FIC176, LD 2067, TA-0129, TA-2868, TA-0133, TA-0134, TA-1521, TA-4315, TA-4321, TA-4325, LD-7749, LD-7750, LD-7751
5. Terminal/Junction Boxes… Unit 1 (Unit 2)	
JT11 (JT96), JT12 (JT97), JT13 (JT98), JT14 (JT99), JT122 (JT123), EJT-210 (EJT-211), JT212 (JT213), EJN-140 (JN148)	JN41 (JT470), JT144, JT420 (JT473), JT423 (JT424), JT425 (JT426), JS7 (JS8), JS93 (JS521), JS94 (JS522), JS95 (JS523), JS96 (JS524), JS131 (JS370), JS132 (JS371), JS133 (JS372), JS134 (JS373), JS289, JS290, JS291, JS293, JS295, JS288, JS292, JS294, JN31 (JN170), JN36 (JN37), JN63 (JS657), JN64 (JS658), JN143 (JN144), JN616

125 V DC Distribution Cabinet 1AADC – Circuit 5				
SUBMERGED ELECTRICAL COMPONENTS IN CONTAINMENT				
Component	**Function**	**Accident/Safety Requirements**	**Analysis**	**Results/Effects**
Limit Switches CVO, CVC (1RH2 Motor Operated)	Position Indication circuitry for valve 1RH2	None	Breaker trip due to submerged component will cause loss of position indication	N/A
NONSUBMERGED ASSOCIATED ELECTRICAL COMPONENTS				
Aux Relays 33X/CSV1 33Y/CSV1	Position Indication circuitry for valve 1RH2	None	Breaker trip due to submerged component will cause loss of position indication	None
Aux Relays 33Z1	11SJ45, 11CS36 interlock	Open Permissive	11SJ45 safety function completed prior to flooding. 11CS36 safety function completed by installing jumpers around interlock	Safety Function will be performed
125 V DC Distribution Cabinet 1AADC – Circuit 6				
SUBMERGED ELECTRICAL COMPONENTS IN CONTAINMENT				
SV-487 (Panel 238)	Control for valve 1CV77 (Charging Line to Reactor Coolant Cold Leg)	None	N/A	None
SV-442 (Panel 241)	Control for valve 1CV114 (Reactor Coolant Pump Seal Bypass Flow)	None	N/A	None
Limit Switches CVO, CVC (1CV77)	Position indication circuitry for valve 1CV77	None	N/A	None
Limit Switches CVO, CVC (1CV114)	Position indication circuitry for valve 1CV114	None	N/A	None
NONSUBMERGED ASSOCIATED ELECTRICAL COMPONENTS				
Aux Relays 33X/1CI 33Y/1CI 33X/SBF 33Y/SBF	Valve position indication for 1CV77 and 1CV114	None	N/A	None

125 V DC Distribution Cabinet 1AADC – Circuit 9				
SUBMERGED ELECTRICAL COMPONENTS IN CONTAINMENT				
Component	**Function**	**Accident/Safety Requirements**	**Analysis**	**Results/Effects**
SV-492 (Panel 238)	Control for valve 1CV4 (Containment Isolation Valve)	Valve 1CV4 closes for an accident (T signal) solenoid valve deenergizes	Fail close circuitry – function performed prior to submergence, function still performed when submerged since breaker will trip open	Safety function will be performed
Limit Switches CVO, CVC (1CV4)	RG 1.97 Position indication circuitry for valve 1CV4 (Isol Valve)	Indicate Containment Isolation	Breaker trip due to submerged component will cause loss of position indication	Valve 1CV4 safety function will be performed. Redundant valve 1CV7 RG 1.97 position indication will indicate containment isolation.
NONSUBMERGED ASSOCIATED ELECTRICAL COMPONENTS				
Aux Relays 33X/LOB 33Y/LOB	Valve position indication for 1CV4 (Isol Valve)	None	N/A	None
Relay 74DC/LOB	Provides loss of 125V DC Alarm for 1CV4 control circuit	None	Breaker trip due to submerged components will alarm loss of voltage for this circuit	None
Aux Relay 43LX/LOB	Provides indication of local control	None	N/A	None
Local CMC Indicating Lights (213)	Provide local indication of valve position, etc	None	N/A	None

125 V DC Distribution Cabinet 1AADC – Circuit 11				
SUBMERGED ELECTRICAL COMPONENTS IN CONTAINMENT				
Component	**Function**	**Accident/Safety Requirements**	**Analysis**	**Results/Effects**
SV-427 (Panel 245)	Control for valve 1SJ123 (Containment Isolation Valve)	Valve 1SJ123 closes for an accident (T signal) solenoid valve deenergizes	Fail close circuitry function performed prior to submergence, function still performed when submerged since breaker will trip open	Safety function will be performed
Limit Switches CVO, CVC (1SJ123)	RG 1.97 Position indication circuitry for valve 1SJ123 (Isol Valve)	Indicate Containment isolation	Breaker trip due to submerged component will cause loss of position indication	Valve 1SJ123 safety function will be performed. Redundant valves 1SJ53, 1SJ60, RG 1.97 position indication will indicate containment isolation.
NONSUBMERGED ASSOCIATED ELECTRICAL COMPONENTS				
Sv-249	Control for valve 1NT32 (Containment Isolation Valve)	Valve 1NT32 closes for an accident (T signal) solenoid valve deenergizes	Fail close circuit design whether breaker trips or not due to submerged components, solenoid will deenergize (check valve is redundant Isol valve)	Safety function will be performed
Limit Switches CVO, CVC (1NT32)	Position indication circuitry for valve 1NT32 (Isol Valve)	None		None
Aux. Relays 33X/1NT32 33Y/1NT32 33X/1SJ123 33Y/1SJ123	Valve position indication for 1NT32 and 1SJ123 (Isol Valves) Also 33Y/...aux relays provide loss of 125 V DC control voltage or valve out of position alarm	None	Breaker trip due to submerged components will alarm loss of control voltage or valve out of position	None
Limit Switches CVO, CVC (11SJ54 motor operated)	Position indication circuitry for valve -11SJ54 (Acc Discharge)	None	Valve 11SJ54 in position for safety injection with power locked out	None
Aux Relays 33X/11SJ54 33Y/11SJ54	Valve position indication for 11SJ54 (Motor Operated)	None	Valve 11SJ54 in position for safety injection with power locked out.	None

125 V DC Distribution Cabinet 1AADC – Circuit 12				
SUBMERGED ELECTRICAL COMPONENTS IN CONTAINMENT				
Component	**Function**	**Accident/Safety Requirements**	**Analysis**	**Results/Effects**
SV-506 (MTD on Valve)	Control for valve 1PR17 (Containment Isol Valve)	Valve 1PR17 closes for an accident (T signal) solenoid valve deenergizes	Fail close circuitry function performed prior to submergence, function still performed when submerged since breaker will trip open	Safety function will be performed
Limit Switches CVO, CVC (1PR17)	RG 1.97 Position indication circuitry for valve 1PR17 (Isol Valve)	Indicate containment isolation	Breaker trip due to submerged component will cause loss of position indication	Valve 1PR17 safety function will be performed. Redundant valves 1PR18 RG 1.97 position indication will indicate containment isolation.
NONSUBMERGED ASSOCIATED ELECTRICAL COMPONENTS				
Aux Relays 95/GAX 96/CIX	Associated with auto-manual circuitry for valve 1PR17	None	N/A	None
Relay 74/DC	Provides loss of 125 V DC alarm for circuit 12	None	Breaker trip due to submerged components will alarm loss of voltage for this circuit	None
Aux Relays 33X/AV 33Y/AV	Valve position indication for 1PR17 (Isol Valve)	None	N/A	None
125 V DC Distribution Cabinet 1AADC – Circuit 41				
SUBMERGED ELECTRICAL COMPONENTS IN CONTAINMENT				
SV-115 (Panel 241)	Control for valve 1SJ63 (SI Accumulator Fill)	None	N/A	None
Limit Switches CVO, CVC (1SJ63)	Position indication circuitry for valve 1SJ63	None	N/A	None
NONSUBMERGED ASSOCIATED ELECTRICAL COMPONENTS				
Aux Relays 33X/1SJ63 33Y/1SJ63	Valve position indication for valve 1SJ63	None	N/A	None

125 V DC Distribution Cabinet 1AADC – Circuit 15				
SUBMERGED ELECTRICAL COMPONENTS IN CONTAINMENT				
Component	**Function**	**Accident/Safety Requirements**	**Analysis**	**Results/Effects**
SV-229 (Panel 233)	Control for valve 11SJ58 (No. 11 Accumulator Test Line Valve)	None	Fail close circuitry	None
SV-230 (Panel 233)	Control for valve 11SJ57 (No. 11 Accumulator Test Line Valve)	None	Fail close circuitry	None
SV-231 (Panel 233)	Control for valve 11SJ20 (No. 11 Accumulator Fill Line Valve)	None	Fail close circuitry	None
SV-232 (Panel 233)	Control for valve 11SJ27 (No. 11 Accumulator to Reactor Coolant Drain Tank)	None	Fail close circuitry	None
SV-233 (Panel 233)	Control for valve 11SJ93 (No. 11 Accumulator Nitrogen Supply)	None	Fail close circuitry	None
SV-110 (Panel 245)	Control for valve 12SJ50 (SI Test Valves)	None	N/A	None
SV-111 (Panel 245)	Control for valve 11SJ50 (SI Test Valves)	None	N/A	None
SV-421 (Panel 232)	Control for valve 1PR15 (Pressurizer Relief Tank Vent Valve)	None	N/A	None
Limit Switches CVO, CVC (11SJ20, 11SJ27, 11SJ50, 11SJ57 & 12SJ50)	Position indication circuitry for valves 11SJ20, 11SJ27, 11SJ50, 11SJ57 & 12SJ50	None	N/A	None
NONSUBMERGED ASSOCIATED ELECTRICAL COMPONENTS				
Limit Switches CVO, CVC (11SJ58 and 11SJ93)	Position indication circuitry for valves 11SJ58 and 11SJ93	None	N/A	None
Limit Switches CVO, CVC (1PR15)	Position indication circuitry for valve 1PR15	None	N/A	None
Aux Relays 33X/VV 33Y/VV	Valve position indication for 1PR15	None	N/A	None
Aux Relays 33X/11SJ93 33Y/11SJ93 33X/11SJ58 33Y/11SJ58 33X/11SJ27 33Y/11SJ27 33X/11SJ57 33Y/11SJ57 33X/11SJ20 33Y/11SJ20	Valve position indication for 11SJ93, 11SJ58, 11SJ27, 11SJ57, and 11SJ20 Also 337/...aux relays provide alarm either loss of control power or valves out of position	None	Breaker trip due to submerged components will alarm loss of control voltage or valves out of position	None

125 V DC Distribution Cabinet 1AADC – Circuit 15				
NONSUBMERGED ASSOCIATED ELECTRICAL COMPONENTS (Cont.)				
Component	**Function**	**Accident/Safety Requirements**	**Analysis**	**Results/Effects**
Limit Switches CVO, CVC (1PR15) Unit 2 only	Position Indication Circuitry for valve 1PR15	None	N/A	None
Limit Switches CVO, CVC (11SJ50 and 12SJ50) - Unit 2 only	Position indication circuitry for valves 11SJ50 and 12SJ50	None	N/A	None
Aux Relays 33X/VV 33Y/VV Unit 2 only	Valve position indication for 1PR15	None	N/A	None
Aux Relays 33X/DMV 33Y/DMV	Valve position indication for 1DR107	None	N/A	None
SV-1200 (Mounted on valve)	Control for valve 1DR107 (demineralized water to component cooling system surge tank inlet)	None	N/A	None
Limit Switches CVC, CVO (1DR107)	Position indication circuitry for valve 1DR107	None	N/A	None
125 V DC Distribution Cabinet 1AADC – Circuit 29				
SUBMERGED ELECTRICAL COMPONENTS IN CONTAINMENT				
SV-518 (Panel 241)	Control for valve 1SS110 (Containment Isolation Valve)	Valve 1SS110 closes for an accident (T signal) solenoid valve deenergizes	Fail close circuitry - function performed prior to submergence, function still performed when submerged since breaker will trip open	Safety function will be performed
SV-519 (Panel 241)	Control for valve 1SS107 (Containment Isolation Valve)	Valve 1SS107 closes for an accident (T signal) solenoid valve deenergizes	Same as above for valve 1SS110	Safety function will be performed
SV-520 (Panel 241)	Control for valve 1SS104 (Containment Isolation Valve)	Valve 1SS104 closes for an accident (T signal) solenoid valve deenergizes	Same as above for valve 1SS110	Safety function will be performed
SV-521 (Panel 241)	Control for valve 1SS103 (Containment Isolation Valve)	Valve 1SS103 closes for an accident (T signal) solenoid valve deenergizes	Same as above for valve 1SS110	Safety function will be performed
Limit Switches CVO, CVC (1SS110, 1SS107, 1SS104, and 1SS103)	RG 1.97 Position indication circuitry for valves 1SS110, 1SS107, 1SS104 and 1SS103 (Isolation Valves)	Indicate containment isolation	Breaker trip due to submerged component will cause loss of position indication	Valves 1SS110, 1SS107, 1SS104 & 1SS103 safety function will be performed. Redundant valves 1SS64, 1SS49, 1SS33 & 1SS27 RG 1.97 position indication will indicate containment isolation

125 V DC Distribution Cabinet 1AADC – Circuit 29				
NONSUBMERGED ASSOCIATED ELECTRICAL COMPONENTS				
Component	**Function**	**Accident/Safety Requirements**	**Analysis**	**Results/Effects**
Aux Relays 33X/1 33Y/1 33X/2 33Y/2 33X/3 33Y/3 33X/4 33Y/4	Valve position indication for 1SS110, 1SS107, 1SS104, and 1SS103 (Isolation Valves) Also for off normal alarm or loss of 125 V DC voltage alarm	None	Breaker trip due to submerged components will alarm loss of control voltage or valve out of position	None
125 V DC Distribution Cabinet 1BBDC – Circuit 7				
SUBMERGED ELECTRICAL COMPONENTS IN CONTAINMENT				
SV-486 (Panel 238)	Control for valve 1CV75 (Auxiliary Spray to Pressurizer)	None	N/A	None
Limit Switches CVO, CVC (1CV75)	Position indication circuitry for valve 1CV75	None	N/A	None
Limit Switches CVO, CVC (1CV132)	Position indication circuitry for valve 1CV132 (Excess Letdown HX)	None	N/A	None
NONSUBMERGED ASSOCIATED ELECTRICAL COMPONENTS				
Aux Relays 33X/CAS 33Y/CAS	Valve position indication for 1CV75	None	N/A	None

125 V DC Distribution Cabinet 1BBDC – Circuit 11				
SUBMERGED ELECTRICAL COMPONENTS IN CONTAINMENT				
Component	**Function**	**Accident/Safety Requirements**	**Analysis**	**Results/Effects**
SV-244 (Panel 236)	Control for valve 14SJ93 (No. 14 Accumulator Nitrogen Supply)	None	Fail close circuitry	None
SV-245 (Panel 236)	Control for valve 14SJ27 (No. 14 Accumulator to Reactor Coolant Drain Tank)	None	Fail close circuitry	None
SV-246 (Panel 236)	Control for valve 14SJ20 (No. 14 Accumulator Fill Line Valve)	None	Fail close circuitry	None
SV-247 (Panel 236)	Control for valve 14SJ57 (No. 14 Accumulator Test Line Valve)	None	Fail close circuitry	None
SV-248 (Panel 236)	Control for valve 14SJ58 (No. 14 Accumulator Test Line Valve)	None	Fail close circuitry	None
Limit Switches CVO, CVC (14SJ27, 14SJ20)	Position indication circuitry for valves 14SJ27 and 14SJ20	None	N/A	None
NONSUBMERGED ASSOCIATED ELECTRICAL COMPONENTS				
Aux Relays 33X/14SJ93 33Y/14SJ93 33X/14SJ58 33Y/14SJ58 33X/14SJ27 33Y/14SJ27 33X/14SJ57 33Y/14SJ57 33X/14SJ20 33Y/14SJ20	Valve position indication for 14SJ93, 14SJ58, 14SJ27, 14SJ57, and 14SJ20 Also 33Y/...aux relays provide alarm either loss of control power or valves out of position	None	Breaker trip due to submerged components will alarm loss of control voltage or valves out of position	None
Limit Switches CVO, CVC (14SJ93, 14SJ57, 14SJ58)	Position indication circuitry for valves, 14SJ93, 14SJ57, 14SJ58	None	N/A	None

125 V DC Distribution Cabinet 1BBDC – Circuit 16				
SUBMERGED ELECTRICAL COMPONENTS IN CONTAINMENT				
Component	**Function**	**Accident/Safety Requirements**	**Analysis**	**Results/Effects**
SV-424 (Panel 232)	Control for valve 1PR14 (Pressurizer Relief Tank to Coolant Drain Tank Pumps)	None	N/A	None
SV-422 (Panel 232)	Control for valve 1WR82 (Primary Water to Pressurizer Relief Tank Spray Header)	None	N/A	None
Limit Switches CVO, CVC (1PR14)	Position indication circuitry for valve 1PR14	None	N/A	None
NONSUBMERGED ASSOCIATED ELECTRICAL COMPONENTS				
Aux Relays 33X/DV 33Y/DV 33X/SV 33Y/SV	Valve position indication for 1PR14 and 1WR82	None	N/A	None
Aux Relay 33X-1/DV	Interlock with reactor coolant drain tank pump control circuit	None	N/A	None
SV413, SV415 SV417, SV419 (Panel 108)	Control for valves 11WG42, 12WG42, 13WG42, 14WG42 (Gas decay tank sampling valves)	None	N/A	None
SV414, SV416 SV418, SV420 (Panel 108)	Control for valves 11WG29, 12WG29, 13WG29, 14WG29 (Gas decay tank inlet valves)	None	N/A	None
SV1027, SV1028 and SV1055 (Mounted on valve) (Unit 2 only)	Control for valves HS49 and HS293 (Heating steam condensate return valves) and HS920 (Sampler bypass valve)	None	N/A	None
Limit Switches CDO, CDC (1CBV35, 1CBV36)	Position indication circuitry for dampers 1CBV35, 1CBV36	None	N/A	None
Relay 74/DC	Provides loss of 125 V DC alarm for circuit 16	None	Breaker trip due to submerged components will alarm loss of voltage for this circuit	None
Limit Switches CVO, CVC (1WR82)	Position indication circuitry for valve 1WR82	None	N/A	None
SV929 (Panel 317)	Control for damper 1CBV35 (Containment Ventilation Vacuum Relief Prefilter Damper)	None	N/A	None

125 V DC Distribution Cabinet 1BBDC – Circuit 16				
NONSUBMERGED ASSOCIATED ELECTRICAL COMPONENTS (Cont.)				
Component	**Function**	**Accident/Safety Requirements**	**Analysis**	**Results/Effects**
SV930 (Panel 317)	Control for damper 1CBV36 (Containment Ventilation Pressure Relief Damper)	None	N/A	None
SV580 (Panel 212)	Control for valve 1WL51 (Liquid Waste Discharge Valve)	None	N/A	None
SV611 (Panel 108)	Control for valve 1WG41 (Radiation waste gas decay tanks to plant vent)	None	N/A	None
Limit Switches CVO, CVC (1WL51)	Position indication circuitry for valve 1WL51	None	N/A	None
Limit Switches CVO, CVC (1WG41)	Position indication circuitry for valve 1WG41	None	N/A	None
Limit Switches CVO, CVC (11WG29, 12WG29, 13WG29, 14WG29)	Position indication circuitry for valves 11WG29, 12WG29, 13WG29 and 14WG29	None	N/A	None
Limit Switches CDO, CDC (1ABV20)	Position indication circuitry for damper 1ABV20	None	N/A	None
Aux Relays 33X/PR 33Y/PR 33X/VR 33Y/VR	Valve position indication for 1CBV35, 1CBV36 (Containment ventilation vacuum relief prefilter damper and pressure relief damper)	None	N/A	None
Aux Relay 33X/10 33Y/10	Valve position indication for 1WL51 (Liquid waste discharge valve)	None	N/A	None
Aux Relay 33X/7 33Y/7	Valve position indication for 1WG41 (Radiation waste gas decay tanks to plant vent)	None	N/A	None
Aux Relay 33X/DD 33Y/DD	Valve position indication for 1ABV20 (Diversion damper)	None	N/A	None

125 V DC Distribution Cabinet 1BBDC – Circuit 17				
SUBMERGED ELECTRICAL COMPONENTS IN CONTAINMENT				
Component	**Function**	**Accident/Safety Requirements**	**Analysis**	**Results/Effects**
SV-234 (Panel 234)	Control for valve 12SJ58 (No. 12 Accumulator Test Line Valve)	None	Fail close circuitry	None
SV-235 (Panel 234)	Control for valve 12SJ57 (No. 12 Accumulator Test Line Valve)	None	Fail close circuitry	None
SV-236 (Panel 234)	Control for valve 12SJ20 (No. 12 Accumulator Test Line Valve)	None	Fail close circuitry	None
SV-237 (Panel 234)	Control for valve 12SJ27 (No. 12 Accumulator to Reactor Coolant Drain Tank)	None	Fail close circuitry	None
SV-238 (Panel 234)	Control for valve 12SJ93 (No. 12 Accumulator Nitrogen Supply)	None	N/A	None
Limit Switches CVO, CVC (12SJ57, 12SJ20, 12SJ27)	Position indication circuitry for valves 12SJ57, 12SJ20, and 12SJ27	None	N/A	None
Limit Switches CVO, CVC (14SJ54) Motor Operated	Position indication circuitry for valve 14SJ54 (Accumulator discharge)	None	Valve 14SJ54 in position for safety injection with power locked out	None
NONSUBMERGED ASSOCIATED ELECTRICAL COMPONENTS				
SV-575 (Panel 311)	Control for valve 1SJ60 (Containment Isolation Valve)	Valve 1SJ60 closes for accident (T signal) solenoid valve deenergizes	Fail close circuitry design whether breaker trips or not due to submerged components solenoid will deenergize	Safety function will be performed
Aux Relays 33X/1SJ60 33Y/1SJ60	Valve position indication for 1SJ60 also 33Y/1SJ60 provides alarm either loss of control power or valves out of position	None	Breaker trip due to submerged components will alarm loss of control power or valve out of position	None
Limit Switches CVO, CVC (1SJ60)	Position indication circuitry for valve 1SJ60	None	N/A	None
Aux Relays 33X/12SJ54 33Y/12SJ54	Valve position indication for 12SJ54 (Motor Operated)	None	Valve 12SJ54 in position for safety injection with power locked out	None
SV-423 (Panel 311)	Control for valve 1NT25 (Containment Isolation Valve)	Valve 1NT25 closes for accident (T signal) solenoid valve deenergizes	Fail close circuitry design whether breaker trips or not due to submerged components solenoid will deenergize	Safety function will be performed whether breaker trips or not due to submerged components solenoid will deenergize

125 V DC Distribution Cabinet 1BBDC – Circuit 17				
NONSUBMERGED ASSOCIATED ELECTRICAL COMPONENTS (Cont.)				
Component	**Function**	**Accident/Safety Requirements**	**Analysis**	**Results/Effects**
Aux Relays 33X/12SJ93 33Y/12SJ93 33X/12SJ58 33Y/12SJ58 33X/12SJ27 33Y/12SJ27 33X/12SJ57 33Y/12SJ57 33X/12SJ20 33Y/12SJ20	Valve position indication for 12SJ93, 12SJ58, 12SJ27, 12SJ57, and 12SJ20 Also 33Y/...aux relays provide alarm either loss of control power or valves out of position	None	Breaker trip due to submerged components will alarm loss of control voltage or valves out of position	None
Limit Switches CVO, CVC (12SJ58 and 12SJ93)	Position indication circuitry for valves 12SJ58 and 12SJ93	None	N/A	None
SV-505 (Mounted on valve)	Control for valve 1PR18 (Containment Isolation Valve)	Valve 1PR18 closes for an accident (T signal) solenoid valve deenergizes	Similar analysis as above for SV423	Safety Function will be performed
SV-507 (Mounted on valve)	Control for valve 1WR80 (Containment Isolation Valve)	Valve 1WR80 closes for an accident (T signal) solenoid valve deenergizes	Similar analysis as above for SV423	Safety Function will be performed
Aux Relays 33X/PWS 33Y/PWS 33X/N2S 33Y/N2S 33X/AV 33Y/AV	Valve position indication for 1NT25, 1PR18, and 1WR80 (Isolation Valves)	None	N/A	None
Limit Switches CVO, CVC, (1NT25, 1PR18 and 1WR80	Position indication circuitry for valves 1NT25,1PR18, and 1WR80 (Isolation Valves)	None	N/A	None
Aux. Relays 33X/14SJ54 33Y/14SJ54	Valve position indication for 14SJ54 (Motor Operated)	None	Valve 14SJ54 in position for safety injection with power locked out	None
95/GAX 96/CIX	Associated with auto-manual circuitry for valve 1PR18	None	N/A	None
74-1/DC	Provides loss of 125V DC alarm for circuit 17	None	Breaker trip due to submerged components will alarm loss of voltage for this circuit	None

125 V DC Distribution Cabinet 1BBDC – Circuit 5 & 19				
SUBMERGED ASSOCIATED ELECTRICAL COMPONENTS				
Component	**Function**	**Accident/Safety Requirements**	**Analysis**	**Results/Effects**
1BBDC BKR 5 SV-489 (Panel 238)	Control for valve 1CV2 (CVCS Letdown Valve)	None	N/A	None
1BBDC BKR 5 SV-490 (Panel 238)	Control for valve 1CV277 (CVCS Letdown Valve)	None	N/A	None
1BBDC BKR 19 SV-491 (Panel 238)	Control for valve 1CV3 (Containment Isolation Valve)	Valve 1CV3 closes for accident (T signal) solenoid valve deenergizes	Fail close circuitry Function performed prior to submergence, function still performed when submerged since breaker will trip open	Safety function will be performed
1BBDC BKR 5 Limit Switches CVO, CVC (1CV2 and 1CV277)	Position indication circuitry for valves 1CV2 and 1CV277	None	N/A	None
1BBDC BKR 19 Limit Switches CVO, CVC (1CV3)	RG 1.97 Position indication circuitry for valve 1CV3 (Isol Valve)	Indicate containment isolation	Breaker trip due to submerged component will cause loss of position indication	Valve 1CV3 safety function will be performed. Redundant valve 1CV7 RG 1.97 position indication will indicate containment isolation.

125 V DC Distribution Cabinet 1BBDC – Circuit 19				
NONSUBMERGED ASSOCIATED ELECTRICAL COMPONENTS				
Component	**Function**	**Accident/Safety Requirements**	**Analysis**	**Results/Effects**
SV-425 (Panel 311) Isolation Valve)	Control for valve 1CV7 (Containment deenergizes	Valve 1CV7 closes for accident (T signal) solenoid valve	Fail close circuitry design whether breaker trips or not due to submerged components solenoid will deenergize	Safety function will be performed
Limit Switches CVO, CVC (1CV7)	Position indication circuitry for valve 1CV7 (Isol Valve)	None	N/A	None
Aux Relays 33X/LIC 33Y/LIC	Valve position indication for 1CV7 (Isol Valve)	None	N/A	None
Aux Relays 33X/LOA 33Y/LOA	Valve position indication for 1CV3 (Isol Valve)	None	N/A	None
Aux Relays 43X/LOA	Associated with automanual circuitry for valve 1CV3	None	N/A	None
Local CMC Indicating Lights (213)	Provide local indication of valve position, etc	None	N/A	None
Relay 74DC/LTV	Provides loss of 125 V DC alarm for circuit 19	None	Breaker trip due to submerged components will alarm loss of voltage for this circuit	None
125 V DC Distribution Cabinet 1BBDC – Circuit 5				
NONSUBMERGED ASSOCIATED ELECTRICAL COMPONENTS				
Aux Relays 33X1/459 33X2/459 33X3/459 33Y/459 33X1/460 33X2/460 33X3/460 33Y/460	Valve position indication for 1CV2 1CV277 Also 33X1/... 33X2/...Aux 33X3... Relays provide open interlocks for letdown orifice valves 1CV3, 1CV4, and 1CV5	None	N/A	None

125 V DC Distribution Cabinet 1CCDC – Circuit 10				
SUBMERGED ELECTRICAL COMPONENTS IN CONTAINMENT				
Component	**Function**	**Accident/Safety Requirements**	**Analysis**	**Results/Effects**
SV-488 (Panel 238)	Control for valve 1CV79 (Charging line to reactor coolant cold leg)	None	N/A	None
Limit Switches CVO, CVC (1CV79)	Position indication circuitry for valve 1CV79	None	N/A	None
NONSUBMERGED ASSOCIATED ELECTRICAL COMPONENTS				
Aux Relays 33X/2CI 33Y/2CI	Valve position indication for 1CV79	None	N/A	None
125 V DC Distribution Cabinet 1CCDC – Circuit 13				
SUBMERGED ELECTRICAL COMPONENTS IN CONTAINMENT				
SV-401 (Panel 241)	Control for valve 1WL96 (Containment Isolation Valve)	Valve 1WL96 closes for an accident (T signal) solenoid valve deenergizes	Fail close circuitry - function performed prior to submergence, function still performed when submerged since breaker will trip open	Safety function will be performed
SV-394 (Panel 241)	Control for valve 1WL16 (Containment Isolation Valve)	Valve 1WL16 closes for an accident (T signal) solenoid valve deenergizes	Same as above for valve 1WL96	Safety function will be performed
SV-399 (Panel 241)	Control for valve 1WL98 (Containment Isolation Valve)	Valve 1WL98 closes for an accident (T signal) solenoid valve deenergizes	Same as above for valve 1WL96	Safety function will be performed
SV-397 (Panel 241)	Control for valve 1WL12 (Containment Isolation Valve)	Valve 1WL12 closes for an accident (T signal) solenoid valve deenergizes	Same as above for valve 1WL96	Safety function will be performed
SV-403 (Panel 246)	Control for valve 1WL7 (Reactor Coolant Drain Tank Valve)	None	N/A	None
Limit Switches CVO, CVC (1WL7 & 1WL98)	Position indication circuitry for valves 1WL7 & 1WL98	None	N/A	None

125 V DC Distribution Cabinet 1CCDC – Circuit 13				
NONSUBMERGED ASSOCIATED ELECTRICAL COMPONENTS				
Component	**Function**	**Accident/Safety Requirements**	**Analysis**	**Results/Effects**
Aux Relays 33X/3 33Y/3 33X/4 33Y/4 33X/1 33Y/1 33X/2 33Y/2	Valve position indication for 1WL98, 1WL12, 1WL96, 1WL16 (Isol Valves)	None	N/A	None
Aux Relay 33X/14	Valve 1WL12 position Interlock with reactor coolant drain tank pumps	None	N/A	None
Aux Relay 95/1	Valve 1WL96 isolation function relay	Relay deenergizes on accident signal to close valve	Fail safe circuitry design relay will deenergize whether breaker trips or not due to submerged components	Safety function will be performed
Aux Relay 95-3	Reactor coolant drain tank sampling control via 1WL96	None	N/A	None
Relay 74/DC	Provides loss of 125 V DC alarm for circuit 13 components will alarm loss of voltage for this circuit	None	Breaker trip due to submerged	None
Aux Relay 20/X, 20X1	Valve 1WL12 isolation function relay	Relay deenergizes on accident signal to close valve	Fail safe circuitry design relay will deenergize whether breaker trips or not due to submerged components	Safety function will be performed
Aux Relay 20Y, 95/2, and 43/LX	Part of valve 1WL12 auto-manual circuit	None	N/A	None
Local Indicating Lights	Local position indication for valves 1WL98, 1WL12, 1WL96, 1WL7, and 1WL16	None	N/A	None
Limit Switches CVO, CVC (1WL96, 1WL12, and 1WL16)	Position indication circuitry for valves 1WL98, 1WL96, 1WL12, and 1WL16 (Isol Valves)	None	N/A	None

125 V DC Distribution Cabinet 1CCDC – Circuits 15 & 22				
SUBMERGED ELECTRICAL COMPONENTS IN CONTAINMENT				
Component	**Function**	**Accident/Safety Requirements**	**Analysis**	**Results/Effects**
1CCDC CKT 15: SV-493 (Panel 238)	Control for valve 1CV5 (Containment Isolation Valve	Valve 1CV5 closes for an accident (T signal) solenoid deenergizes	Fail close circuitry - performed prior to submergence, function still performed when submerged since breaker will trip open	Safety function will be performed
1CCDC CKT 22: SV-498 (Panel 241)	Control for valve 1CV134 (Excess Letdown HX valve)	None	N/A	None
SV-499 (Panel 241)	Control for valve 1CV131 (Excess Letdown HX valve)	None	N/A	None
SV-500 (Panel 241)	Control for valve 1CV278 (Excess Letdown HX valve)	None	N/A	None
Limit Switches CVO, CVC (1CV134, 1CV131 & 1CV278)	Position indication circuitry for valves 1CV134, 1CV131 & 1CV278	None	N/A	None
NONSUBMERGED ASSOCIATED ELECTRICAL COMPONENTS				
1CCDC CKT 15: Aux Relays 33X/LOC 33Y/LOC	Valve position indication for 1CV5 (Isol Valve)	None	N/A	None
Aux Relays 43LX/LOC	Associated with auto-manual circuitry for valve 1CV5	None	N/A	None
Local CMC Indicating Lights (213)	Provide local indication of valve position, etc	None	N/A	None
Relay 74DC	Provides loss of 125V DC alarm	None	Breaker trip due to submerged components will alarm loss of voltage for this circuit	None
11CCDC CKT 22: Aux Relays 33X/ELD 33Y/ELD 33X/ELIB 33Y/ELIB 33X/ELIA 33Y/ELIA	Valve position indication for 1CV134, 1CV131, 1CV278	None	N/A	None

125 V DC Distribution Cabinet 1CCDC – Circuit 17				
SUBMERGED ELECTRICAL COMPONENTS IN CONTAINMENT				
Component	**Function**	**Accident/Safety Requirements**	**Analysis**	**Results/Effects**
SV-239 (Panel 235)	Control for valve 13SJ93 (No. 13 Accumulator Nitrogen Supply)	None	Fail close circuitry	None
SV-240 (Panel 235)	Control for valve 13SJ27 (No. 13 Accumulator to Reactor Coolant Drain Tank)	None	Fail close circuitry	None
SV-241 (Panel 235)	Control for valve 13SJ20 (No. 13 Accumulator Fill Line Valve)	None	Fail close circuitry	None
SV-242 (Panel 235)	Control for valve 13SJ57 (No. 13 Accumulator Test Line Valve)	None	Fail close circuitry	None
SV-243 (Panel 235)	Control for valve 13SJ58 (No. 13 Accumulator Test Line Valve)	None	Fail close circuitry	None
Limit Switches CVO, CVC (13SJ20,13SJ27, 13SJ57 & 13SJ58)	Position indication circuitry for valve 13SJ20,13SJ27, 13SJ57 & 13SJ58	None	N/A	None
Limit Switches CVO, CVC (13SJ54 Motor Operated)	Position indication circuitry for valve 13SJ54 (Acc Discharge)	None	Valve 13SJ54 in position for safety injection with power locked out	None
NONSUBMERGED ASSOCIATED ELECTRICAL COMPONENTS				
Aux Relays 33X/13SJ93 33Y/13SJ93 33X/13SJ58 33Y/13SJ58 33X/13SJ27 33Y/13SJ27 33X/13SJ57 33Y/13SJ57 33X/13SJ20 33Y/13SJ20	Valve position indication for 13SJ93, 13SJ58, 13SJ27, 13SJ57, and 13SJ20 Also 33Y/... aux. relays provide alarm either loss of control power or valves out of position	None	Breaker trip due to submerged components will alarm loss of control voltage or valve out of position	None
Aux Relays 33X/13SJ54 33Y/13SJ54	Valve position indication for 13SJ54 (Motor Operated)	None	Valve 13SJ54 in position for safety injection with power locked out	None
Limit Switches CVO, CVC (13SJ93)	Position indication circuitry for valve 13SJ93	None	N/A	None

125 V DC Distribution Cabinet 1CCDC – Circuits 20 & 22				
SUBMERGED ELECTRICAL COMPONENTS IN CONTAINMENT				
Component	**Function**	**Accident/Safety Requirements**	**Analysis**	**Results/Effects**
1CCDC CKT 20: Limit Switches COV, CVC (1RH26)	Position indication circuitry for valve 1RH26 (Motor Operated)	None	N/A	None
1CCDC CKT 22: SV-116 (Panel 245)	Control for valve 1SJ19 (Accumulator Fill Valve)	None	N/A	None
125 V DC Distribution Cabinet 1CCDC – Circuit 22				
NONSUBMERGED ASSOCIATED ELECTRICAL COMPONENTS				
Relay 74/DC	Provides loss of 125 DC alarm for circuit	None	Breaker trip due to submerged components will alarm loss of voltage for this circuit	None
Aux Relays 33X/1SJ19 33Y/1SJ19	Valve position indication for 1SJ19	None	N/A	None
125 V DC Distribution Cabinet 1CCDC – Circuit 20				
NONSUBMERGED ASSOCIATED ELECTRICAL COMPONENTS				
Limit Switches CVO, CVC (1SJ30, 1SJ40, 1SJ69)	Position indication circuitry for valves 1SJ30, 1SJ40, and 1SJ69 (Motor Operated	None	Valves 1SJ30 and 1SJ40 in position for safety injection with power locked out - loss of indication will not affect need to operate at some time during recirc phase of accident - position alarm in aux annunciator not affected so that position information is provided	None
Aux Relays 33X/1SJ30 33Y/1SJ30 33X/12SJ40 33Y/12SJ40 33X/RSTV 33Y/RSTV 33X/CLIV 33Y/CLIV	Valve position indication for 1SJ30, 12SJ40, 1SJ69, and 1RH26 (Motor Operated)	None	Same as above	None

125 V DC Distribution Cabinets 1CCDC Circuit 22 & 1DDC – Circuit 16				
NONSUBMERGED ASSOCIATED ELECTRICAL COMPONENTS				
Component	**Function**	**Accident/Safety Requirements**	**Analysis**	**Results/Effects**
1CCDC CKT 22: Limit Switches CVO, CVC (1SJ19)	Position indication circuitry for valve 1SJ19	None	N/A	None
SUBMERGED ELECTRICAL COMPONENTS IN CONTAINMENT				
1DDC CKT 16: SV-772 (Panel 241)	Control for valve 1SJ163 (SI Test Valve)	None	N/A (fail close circuit)	None
SV-773 (Panel 241)	Control for valve 14SJ162 (SI Test Valve)	None	N/A (fail close circuit)	None
SV-774 (Panel 241)	Control for valve 13SJ162 (SI Test Valve)	None	N/A (fail close circuit)	None
Limit Switches CVO, CVC (1SJ163, 14SJ162)	Position indication circuitry for valves 1SJ163, 14SJ162	None	N/A	None
NONSUBMERGED ASSOCIATED ELECTRICAL COMPONENTS				
Aux Relays 33X/TLVC 33Y/TLVC 33X/TLV3 33Y/TLV3 33X/TLV4 33Y/TLV4	Valve position indication for 1SJ163, 13SJ162, and 14SJ162. Also 33Y...aux relays provide off normal position alarm or loss of 125 V DC control voltage	None	None Breaker trip due to submerged components will alarm loss of control power or valve out of position	None
125 V DC Distribution Cabinet 1DDC – Circuit 16				
NONSUBMERGED ASSOCIATED ELECTRICAL COMPONENTS				
Limit Switches CVO, CVC 13SJ162	Position indication circuitry for valve 13SJ162	None	N/A	None

125 V DC Distribution Cabinet 1DDC – Circuit 28				
SUBMERGED ELECTRICAL COMPONENTS IN CONTAINMENT				
Component	**Function**	**Accident/Safety Requirements**	**Analysis**	**Results/Effects**
SV-757 (Panel 241)	Control for valve 1SJ163 (SI Test Valve)	None	N/A (fail close circuit)	None
SV-771 (Panel 245)	Control for valve 1SJ166 (SI Test Valve)	None	N/A (fail close circuit)	None
SV-751 (Panel 241)	Control for valve 1SJ159 (SI Test Valve)	None	N/A (fail close circuit)	None
SV-758 (Panel 241)	Control for valve 12SJ162 (SI Test Valve)	None	N/A (fail close circuit)	None
SV-753 (Panel 245)	Control for valve 1SJ158 (SI Test Valve)	None	N/A (fail close circuit)	None
Limit Switches CVO, CVC (11SJ162, 1SJ166, 1SJ159, 12SJ162 & 1SJ158)	Position indication circuitry for valves 11SJ162, 1SJ166, 1SJ159, 12SJ162 & 1SJ158	None	N/A	None
NONSUBMERGED ASSOCIATED ELECTRICAL COMPONENTS				
Aux Relays 33X/11SJ162 33Y/11SJ162 33X/1SJ166 33Y/1SJ166 33X/1SJ159 33Y/1SJ159 33X/12SJ162 33Y/12SJ162 33X/1SJ158 33Y/1SJ158	Valve position indication for 11SJ162, 1SJ159, 12SJ162, 1SJ166, and 1SJ158. Also 33Y/...aux relays provide out of position alarm includes 33Y/1SJ53	None	Breaker trip due to submerged components will alarm loss of control voltage or valve out of position	None

125 V DC Distribution Cabinet 1DDC – Circuit 35				
SUBMERGED ELECTRICAL COMPONENTS IN CONTAINMENT				
Component	**Function**	**Accident/Safety Requirements**	**Analysis**	**Results/Effects**
SV-444 (Panel 240)	Control for valve 14CV104 (RCP Seal Leak Off)	None	N/A	None
NONSUBMERGED ASSOCIATED ELECTRICAL COMPONENTS				
SV-443 (Panel 355)	Control for valve 14WR62 (Standpipe Supply)	None	N/A	None
Limit Switches CVO, CVC (14WR62, 14CV104)	Position indication circuitry for valve 14WR62 and 14CV104	None	N/A	None
Aux Relays 33X/SSV 33Y/SSV 33X/SLV 33Y/SLV	Valve position indication for 14CV104 and 14WR62	None	N/A	None

*Circuit protection – entire 125 V dc circuit protected by Class 1E 15 amp circuit breaker.

115 V AC Vital Instrument Bus 1A - Circuit 19					
SUBMERGED ELECTRICAL COMPONENTS IN CONTAINMENT					
Component	**Function**	**Control Gr. Affiliation**	**Accident/Safety Requirements**	**Analysis**	**Results/Effects**
PT-936A (Panel 233)	Accumulator Pressure No. 11	Process Gr. 1 Rack 21	Required during injection phase for up to 5 minutes following an accident	Instrument will function for the required time period prior to any flooding - Panel 233 is located at E1. 78" with the instrument approx. 4' up from the bottom	Safety function will be performed
LT-934A (Panel 233)	Accumulator Level No. 11	Process Gr. 1 Rack 21	RG 1.97 Category 3 (EQ not required)	Instrument will function for the required time period prior to any flooding	None
PT-937B (Panel 234)	Accumulator Pressure No. 12	Process Gr. 1 Rack 21	Required during injection phase for up to 5 minutes following an accident	Instrument will function for the required time period prior to any flooding - Panel 234 is located at E1.78' with the instrument approx. 4' up from the bottom	Safety function will be performed
LT-935B (Panel 234)	Accumulator Level No. 12	Process Gr. 1 Rack 21	RG 1.97 Category 3 (EQ not required)	Instrument will function for the required time period prior to any flooding	None
PT-188 (Panel 237)	No. 11 Reactor Coolant Pump Seal Water Diff. Pressure	Process Gr. 1 Rack 21	None	N/A	None
FIT-159A (Local)	No. 11 Reactor Coolant Pump Seal Leakoff Flow	Process Gr. 1 Rack 21	None	N/A	None
FIT-159B (Local)	No. 11 Reactor Coolant Pump Seal Leakoff Flow	Process Gr. 1 Rack 21	None	N/A	None
	CIRCUIT PROTECTION - ENTIRE 115V AC CIRCUIT PROTECTED BY CLASS 1E 15 AMP CIRCUIT BREAKER. INDIVIDUAL PROCESS/PROTECTION CONTROL AND INDICATION LOOPS PROVIDED WITH THEIR OWN FUSE PROTECTED POWER SUPPLY.				

115V AC Vital Instrument Bus 1A - Circuit 20					
SUBMERGED ELECTRICAL COMPONENTS IN CONTAINMENT					
Component	**Function**	**Control Gr. Affiliation**	**Accident/Safety Requirements**	**Analysis**	**Results/Effects**
FT414 (Panel 447-1A)	No. 11 Reactor Coolant Loop Flow	Protection Channel I Rack 3	Provides input to reactor trip logic, not required for long term accident conditions	Instrument is provided for loss of flow protection. Reactor will trip on safety injection signal for a loss-of-coolant accident. The loss of the instrument due to flooding is acceptable	None - Safety function is performed
FT-424 (Panel 447-1D)	No. 12 Reactor Coolant Loop Flow	Protection Channel I Rack 3	Provides input to reactor trip logic, not required for long term accident conditions	Same analysis as for FT-414 above	None - Safety func- is performed
FT-434 (Panel 447-1G)	No. 13 Reactor Coolant Loop Flow	Protection Channel I Rack 3	Provides input to reactor trip logic, not required for long term accident conditions	Same analysis as for FT-414 above	None - Safety func- is performed
FT-444 (Panel 447-1K)	No. 14 Reactor Coolant Loop Flow	Protection Channel I Rack 3	Provides input to reactor trip logic, not required for long term accident conditions	Same analysis as for FT-414 above	None - Safety func- is performed
	CIRCUIT PROTECTION - ENTIRE 115V AC CIRCUIT PROTECTED BY CLASS 1E 15 AMP CIRCUIT BREAKER. INDIVIDUAL PROCESS/PROTECTION CONTROL AND INDICATION LOOPS PROVIDED WITH THEIR OWN FUSE PROTECTED POWER SUPPLY.				

115 V AC Vital Instrument Bus 1B - Circuit 15					
SUBMERGED ELECTRICAL COMPONENTS IN CONTAINMENT					
Component	**Function**	**Control Gr. Affiliation**	**Accident/Safety Requirements**	**Analysis**	**Results/Effects**
PT-472 (Panel 232)	Pressurizer Relief Tank Pressure	Process Gr. 2 Rack 20	None	N/A	None
LT-470 (Panel 232) Level	Pressurizer Relief Tank	Process Gr. 2 Rack 20	None	N/A	None
PT-187 (Panel 232)	No. 12 Reactor Coolant Seal Water Diff. Pressure	Process Gr. 2 Rack 16	None	N/A	None
PT-937A (Panel 233)	Accumulator Pressure No. 11	Process Gr. 2 Rack 16	Required during injection phase for up to 5 minutes following an accident	Instrument will function for the required time period prior to any flooding - Panel 233 is located at E1. 78' with the instrument approx. 4' up from the bottom	Safety function will be performed
LT-935A (Panel 233)	Accumulator Pressure No. 11	Process Gr. 2 Rack 16	RG 1.97 Category 3 (EQ not required)	Instrument will function for the required time period prior to any flooding	None
PT-936B (Panel 234)	Accumulator Pressure No. 12	Process Gr. 2 Rack 16	Required during injection phase for up to 5 minutes following an accident	Instrument will function for the required time period prior to flooding - Panel 234 is located at E1.78' with the instrument approx. 4' up from the bottom	Safety function will be performed
LT-934B (Panel 234)	Accumulator Pressure No. 12	Process Gr. 2 Rack 16	RG 1.97 Category 3 (EQ not required)	Instrument will function for the required time period prior to any flooding	None
PT-121 (Panel 241)	Excess Letdown Pressure	Process Gr. 2 Rack 16	None	N/A	None
E/P Converter (Panel 241)	Control for Valve 1CV132	Process Gr. 2 Rack 16	None	N/A	None
FIT-158A (Local)	No. 12 Reactor Coolant Pump Seal Leakoff Flow	Process Gr. 2 Rack 16	None	N/A	None
FIT-158B (Local)	No. 12 Reactor Coolant Pump Seal Leakoff Flow	Process Gr. 2 Rack 16	None	N/A	None
	CIRCUIT PROTECTION - ENTIRE 115V AC CIRCUIT PROTECTED BY CLASS 1E 15 AMP CIRCUIT BREAKER. INDIVIDUAL PROCESS/PROTECTION CONTROL AND INDICATION LOOPS PROVIDED WITH THEIR OWN FUSE PROTECTED POWER SUPPLY.				

115V AC Vital Instrument Bus 1B - Circuit 16					
SUBMERGED ELECTRICAL COMPONENTS IN CONTAINMENT					
Component	**Function**	**Control Gr. Affiliation**	**Accident/Safety Requirements**	**Analysis**	**Results/Effects**
PT-415 (Panel 447-1B)	No. 11 Reactor Coolant Loop Flow	Protection Channel II Rack 7	Provides input to reactor trip logic, not required for long term accident conditions	Instrument is provided for loss of flow protection. A reactor trip will be initiated by a safety injection signal for the loss-of-coolant accident. The loss of the instrument due to flooding acceptable	None - Safety func- is performed
FT-425 (Panel 447-1E)	No. 12 Reactor Coolant Loop Flow	Protection Channel II Rack 7	Provides input to reactor trip logic, not required for long term accident conditions	Same analysis as for PT-415 above	None - Safety func- is performed
FT-435 (Panel 447-1H)	No. 13 Reactor Coolant Loop Flow	Protection Channel II Rack 7	Provides input to reactor trip logic, not required for long term accident conditions	Same analysis as for PT-415 above	None - Safety func- is performed
FT-445 (Panel 447)	No. 14 Reactor Coolant Loop Flow	Protection Channel II Rack 7	Provides input to reactor trip logic, not required for long term accident conditions	Same analysis as for PT-415 above	None - Safety func- is performed
	CIRCUIT PROTECTION - ENTIRE 115V AC CIRCUIT PROTECTED BY CLASS 1E 15 AMP CIRCUIT BREAKER. INDIVIDUAL PROCESS/PROTECTION CONTROL AND INDICATION LOOPS PROVIDED WITH THEIR OWN FUSE PROTECTED POWER SUPPLY.				

115 V AC Vital Instrument Bus 1C - Circuit 12					
SUBMERGED ELECTRICAL COMPONENTS IN CONTAINMENT					
Component	**Function**	**Control Gr. Affiliation**	**Accident/Safety Requirements**	**Analysis**	**Results/Effects**
PT-936C (Panel 235)	Accumulator Pressure No. 13	Process Gr. 3 Rack 24	Required during injection phase for up to 5 minutes following an accident	Instrument will function for the required time period prior to any flooding - Panel 235 is located at E1. 78' with the instrument approx. 4' up from the bottom	Safety function will be performed
LT-934C (Panel 235)	Accumulator Pressure No. 13	Process Gr. 3 Rack 24	RG 1.97 Category 3 (EQ not required)	Instrument will function for the required time period prior to any flooding	None
PT-937D (Panel 236)	Accumulator Pressure No. 14	Process Gr. 3 Rack 24	Required during injection phase for up to 5 minutes following an accident	Instrument will function for the required time period prior to any flooding - Panel 236 is located at E1. 78' with the instrument approx. 4' up from the bottom	Safety function will be performed
LT-935D (Panel 236)	Accumulator Pressure No. 14	Process Gr. 3 Rack 24	RG 1.97 Category 3 (EQ not required)	Instrument will function for the required time period prior to any flooding	None
PT-186 (Panel 241)	No. 13 Reactor Coolant Pump Seal Leakoff Flow	Process Gr. 3 Rack 24	None	N/A	None
FIT-157A (Local)	No. 13 Reactor Coolant Pump Seal Leakoff Flow	Process Gr. 3 Rack 24	None	N/A	None
FIT-157B (Local)	No. 13 Reactor Coolant Pump Seal Leakoff Flow	Process Gr. 3 Rack 24	None	N/A	None
	CIRCUIT PROTECTION - ENTIRE 115V AC CIRCUIT PROTECTED BY CLASS 1E 15 AMP CIRCUIT BREAKER. INDIVIDUAL PROCESS/PROTECTION CONTROL AND INDICATION LOOPS PROVIDED WITH THEIR OWN FUSE PROTECTED POWER SUPPLY.				

115 V AC Vital Instrument Bus 1C - Circuit 13					
SUBMERGED ELECTRICAL COMPONENTS IN CONTAINMENT					
Component	**Function**	**Control Gr. Affiliation**	**Accident/Safety Requirements**	**Analysis**	**Results/Effects**
FT-416 (Panel 447-1C)	No. 11 Reactor Coolant Loop Flow	Protection Channel III Rack 12	Provides input to reactor trip logic, not required for long term accident conditions	Instrument is provided for loss of flow protection. A reactor trip will be initiated by a safety injection signal for the loss-of-coolant accident. The loss of the instrument due to flooding is acceptable	None - Safety func- is performed
FT-426 (Panel 447-1F)	No. 12 Reactor Coolant Loop Flow	Protection Channel III Rack 12	Provides input to reactor trip logic, not required for long term accident conditions	Same analysis as FT-416 above	None - Safety func- is performed
FT-436 (Panel 447-1J)	No. 13 Reactor Coolant Loop Flow	Protection Channel III Rack 12	Provides input to reactor trip logic, not required for long term accident conditions	Same analysis as FT-416 above	None - Safety func- is performed
FT-446 (Panel 447-1M)	No. 14 Reactor Coolant Loop Flow	Protection Channel III Rack 12	Provides input to reactor trip logic, not required for long term accident conditions	Same analysis as FT-416 above	None - Safety func- is performed
	CIRCUIT PROTECTION - ENTIRE 115V AC CIRCUIT PROTECTED BY CLASS 1E 15 AMP CIRCUIT BREAKER. INDIVIDUAL PROCESS/PROTECTION CONTROL AND INDICATION LOOPS PROVIDED WITH THEIR OWN FUSE PROTECTED POWER SUPPLY.				

115V AC Vital Instrument Bus 1D - Circuit 7					
SUBMERGED ELECTRICAL COMPONENTS IN CONTAINMENT					
Component	**Function**	**Control Gr. Affiliation**	**Accident/Safety Requirements**	**Analysis**	**Results/Effects**
PT-937C (Panel 235)	Accumulator Pressure No. 13	Process Gr. 4 Rack 28	Required during injection phase for up to 5 minutes following an accident	Instrument will function for the required time period prior to any flooding - Panel 235 is located at E1. 78' with the instrument approx. 4' up from the bottom	Safety Function will be performed
LT-935C (Panel 235)	Accumulator Pressure No. 13	Process Gr. 4 Rack 28	RG 1.97 Category 3 (EQ not required)	Instrument will function for the required time prior to any flooding	None
PT-936D (Panel 236)	Accumulator Pressure No. 14	Process Gr. 4 Rack 28	Required during injection phase for up to 5 minutes following an accident	Instrument will function for the required time period prior to any flooding - Panel 236 is located at E1.78' with the instrument approx. 4' up from the bottom	Safety Function will be performed
LT-934D (Panel 236)	Accumulator Pressure No. 14	Process Gr. 4 Rack 28	RG 1.97 Category 3 (EQ not required)	Instrument will function for the required time prior to any flooding	None
PT-183 (Panel 240)	No. 14 Reactor Coolant Pump Seal Water Diff. Pressure	Process Gr. 4 Rack 27	None	N/A	None
E/P Converter (Panel 241)	Control for Valve INT35	Process Gr. 4 Rack 28	None	N/A	None
FIT-156A (Local)	No. 14 Reactor Coolant Pump Seal Leakoff Flow	Process Gr. 4 Rack 28	None	N/A	None
FIT-156B (Local)	No. 14 Reactor Coolant Pump Seal Leakoff Flow	Process Gr. 4	None	N/A	None
	CIRCUIT PROTECTION - ENTIRE 115V AC CIRCUIT PROTECTED BY CLASS 1E 15 AMP CIRCUIT BREAKER. INDIVIDUAL PROCESS/PROTECTION CONTROL AND INDICATION LOOPS PROVIDED WITH THEIR OWN FUSE PROTECTED POWER SUPPLY.				

115V AC Vital Instrument Bus 1D - Circuit 13					
SUBMERGED ELECTRICAL COMPONENTS IN CONTAINMENT					
Component	**Function**	**Control Gr. Affiliation**	**Accident/Safety Requirements**	**Analysis**	**Results/Effects**
Triaxial Accelerometer	Seismic Instrumentation	N/A	None	N/A	None
CIRCUIT PROTECTION - ENTIRE 115V AC CIRCUIT PROTECTED BY CLASS 1E 15 AMP CIRCUIT BREAKER. ONLY THE SEISMIC INSTRUMENTATION SYSTEM IS CONNECTED TO THIS CIRCUIT.					

230V AC Vital Control Center 1A Ventilation - Circuit Section 1D				
SUBMERGED ELECTRIC COMPONENTS IN CONTAINMENT				
Component	**Function**	**Accident/Safety Requirements**	**Analysis**	**Results/Effects**
No. 11 Reactor Nozzle Support Fan	Nozzle Support Vent System	None	N/A	None
NONSUBMERGED ELECTRIC COMPONENTS IN CONTAINMENT				
Component	**Function**	**Accident/Safety Requirements**	**Analysis**	**Results/Effects**
Aux. Relays 33X 63X 23X	Alarm Circuitry for Damper Position, Low Air Flow, Hi Air Temperature for No. 11 Reactor Nozzle Support Vent System	None	N/A	None
Aux. Relays 6X, 3X, 6Y and Starter Relay Relay 6	Fan and Damper Operation Control	None	N/A	None
Relay 74/AC	Provides Loss of 115V AC Control Voltage for No. 11 Circuit	None	230V Breaker/Control Circuit fuse trip due to submerged components will alarm loss of control voltage for this circuit	
SV-912 (Panel 247-1A)	Control for Damper 1CBV34 (No. 11 Reactor Nozzle Support Fan)	None	N/A	None
FD-7670 (Local)	Low Flow Alarm for No. 11 Reactor Support Vent System	None	N/A	None
FD-7671 (Local)	Hi Temperature Alarm for No. 11 Reactor Support Vent System	None	N/A	None
Limit Switch CDO for Damper 1CBV34	Position Indication Circuitry for Damper	None	N/A	None
230V AC Vital Control Center 1B Ventilation - Circuit Section 1D				
SUBMERGED ELECTRIC COMPONENTS IN CONTAINMENT				
Component	**Function**	**Accident/Safety Requirements**	**Analysis**	**Results/Effects**
No. 12 Reactor Nozzle Support Fan	Nozzle Support Vent System	None	N/A	None

230V AC Vital Control Center 1B Ventilation - Circuit Section 1D				
NONSUBMERGED ELECTRIC COMPONENTS IN CONTAINMENT				
Component	**Function**	**Accident/Safety Requirements**	**Analysis**	**Results/Effects**
Aux. Relays 33X 63X 23X	Alarm Circuitry for Damper Position, Low Air Flow, Hi Air Temperature for No. 12 Reactor Nozzle Support Vent System	None	N/A	None
Aux. Relays 6X, 3X, 6Y, and Starter Relay 6	Fan and Damper Operation Control	None	N/A	None
Relay 74/AC	Provides Loss of 115V AC Voltage for No. 12 Fan Control Circuit	None	230V Breaker/Control circuit fuse trip due to submerged components will alarm loss of control voltage for this circuit	
SV-913 (Panel 247-1A)	Control for Damper 1CBV32 (No. 12 Reactor Nozzle Support Fan)	None	N/A	None
FD-7672 (Local)	Low Flow Alarm for No. 12 Reactor Support Vent System	None	N/A	None
TD-7673 (Local)	Hi Temperature Alarm for No. 12 Reactor Support Vent System	None	N/A	None
Limit Switch CDO for Damper 1CBV32	Position Indication Circuitry for Damper	None	N/A	None
230V AC Vital Control Center 1C Ventilation - Circuit Section 1A				
SUBMERGED ELECTRIC COMPONENTS IN CONTAINMENT				
Component	**Function**	**Accident/Safety Requirements**	**Analysis**	**Results/Effects**
No. 13 Reactor Nozzle Support Fan	Nozzle Support Vent System	None	N/A	None

230V AC Vital Control Center 1C Ventilation - Circuit Section 1A				
NONSUBMERGED ELECTRIC COMPONENTS IN CONTAINMENT				
Component	**Function**	**Accident/Safety Requirements**	**Analysis**	**Results/Effects**
Aux. Relays 33X 63X 23X	Alarm Circuitry for Damper Position, Low Air Flow, Hi Air Temperature for No. 13 Reactor Nozzle Support Vent System	None	N/A	None
Aux. Relays 6X, 3X, 6Y, and Starter Relay 6	Fan and Damper Operation Control	None	N/A	None
Relay 74/AC	Provides Loss of 115V AC Voltage for No. 13 Fan Control Circuit	None	230V Breaker/Control Circuit fuse trip due to submerged components will alarm loss of control voltage for this circuit	
SV-914 (Panel 247-1A)	Control for Damper 1CBV33 (No. 13 Reactor Nozzle Support Fan)	None	N/A	None
FD-7674 (Local)	Low Flow Alarm for No. 13 Reactor Support Vent System	None	N/A	None
TD-7675 (Local)	Hi Temperature Alarm for No. 13 Reactor Support Vent System	None	N/A	None
Limit Switch CDO for Damper 1CBV33	Position Indication Circuitry for Damper	None	N/A	None
230V AC Vital Control Center 1C Ventilation - Circuit Section 2A				
SUBMERGED ELECTRIC COMPONENTS IN CONTAINMENT				
Component	**Function**	**Accident/Safety Requirements**	**Analysis**	**Results/Effects**
No. 14 Reactor Nozzle Support Fan	Nozzle Support Vent System	None	N/A	None
NONSUBMERGED ELECTRIC COMPONENTS IN CONTAINMENT				
Component	**Function**	**Accident/Safety Requirements**	**Analysis**	**Results/Effects**
Aux. Relays 33X 63X 23X	Alarm Circuitry for Damper Position, Low Air Flow, Hi Air Temperature for No. 14 Reactor Nozzle Support Vent System	None	N/A	None
Aux. Relays 6X, 3X, 6Y, and Starter Relay 6	Fan and Damper Operation/Control	None	N/A	None

230V AC Vital Control Center 1C Ventilation - Circuit Section 2A (Cont.)				
Relay 74/AC	Provides Loss of 115V AC Voltage for No. 14 Fan Control Circuit	None	230V Breaker/Control circuit fuse trip due to submerged components will alarm loss of control voltage for this circuit	
SV-915 (Panel 247-1A)	Control for Damper 1CBV31 (No. 14 Reactor Nozzle Support Fan)	None	N/A	None
FD-7676 (Local)	Low Flow Alarm for No. 14 Reactor Support Vent System	None	N/A	None
FC-7677 (Local)	Hi Flow Alarm for No. 14 Reactor Support Vent System	None	N/A	None
Limit Switch CDO for Damper 1CBV31	Position Indication Circuitry for Damper	None	N/A	None
230V AC Vital Control Center 1A East Valves - Circuit Section 4A				
SUBMERGED ELECTRIC COMPONENTS IN CONTAINMENT				
Component	**Function**	**Accident/Safety Requirements**	**Analysis**	**Results/Effects**
1RH2 (Motor operated)	RHR Common Suction Isolation Valve	RHR Suction	Valve is administratively locked closed. Circuit breaker trip could prevent operator opening	1RH1 available as alternate, also steam generators can provide cooling
Limit and Torque Switches for Valve 1RH2	Control and position indications for valve 1RH2	RHR Suction	Same analysis as above for the valve itself	Same analysis as above for the valve itself
NONSUBMERGED ELECTRIC COMPONENTS IN CONTAINMENT				
Component	**Function**	**Accident/Safety Requirements**	**Analysis**	**Results/Effects**
Relay 74X/AC	Indicate control circuit energized for 2RH1	None	230V Breaker/Control circuit fuse trip due to submerged components will alarm loss of control voltage for this circuit	None
230V AC Vital Control Center 1A East Valves - Circuit Section 4I				
SUBMERGED ELECTRIC COMPONENTS IN CONTAINMENT				
Component	**Function**	**Accident/Safety Requirements**	**Analysis**	**Results/Effects**
1CC190 (Motor operated)	Reactor Coolant Pump Thermal Barrier Component Cooling Water Return (Containment Isolation Valve)	Valve closes for an accident (P signal)	Valve closes on signal prior to valve becoming submerged (located at approx. El 79')	Safety function will be performed

230V AC Vital Control Center 1A East Valves - Circuit Section 4I				
Limit and Torque Switches for Valve 1CC190	Control and position position indications for Valve 1CC190	Control portion of function needed until valve operates as required	Same analysis as above for the valve itself	Safety function will be performed
NONSUBMERGED ELECTRIC COMPONENTS IN CONTAINMENT				
Component	**Function**	**Accident/Safety Requirements**	**Analysis**	**Results/Effects**
Aux. Relays 33X 33Y	Valve position indication for 1CC190	None	N/A	None
Relay 74AC/TBV	Provides loss of 115V AC control voltage for 1CC190 control circuit	None	230 V Breaker/Control circuit fuse trip due to submerged components will alarm loss of control voltage for this circuit	None
Aux. Relays 9X/0, 9X/C and starter 9/0 9/C	Valve Operation Control	Needed until valve operates as required	Will operate as required	Safety function will be performed
230V AC Vital Control Center 1A East Valves - Circuit Section 5E				
SUBMERGED ELECTRIC COMPONENTS IN CONTAINMENT				
Component	**Function**	**Accident/Safety Requirements**	**Analysis**	**Results/Effects**
1CC187 (Motor operated)	Reactor Coolant Pump Component Cooling Water Return (Containment Isolation Valve)	Valve closes for an accident (P signal)	Valve closes on signal prior to valve becoming submerged (located at approx. El.79')	Safety function will be performed
Limit and Torque Switches for Valve 1CC187	Control and position indications for valve 1CC187	Control portion of function needed until valve operates as required valve itself	Same analysis as above for the valve itself	Safety function will be performed
NONSUBMERGED ELECTRIC COMPONENTS IN CONTAINMENT				
Component	**Function**	**Accident/Safety Requirements**	**Analysis**	**Results/Effects**
Aux. Relays 33X/14B 33Y/14B	Valve position indications for 1CC187	None	N/A	None
Relay 74AC/14B	Provides loss of 115V AC control voltage for 1CC187 control circuit	None	230 Breaker/Control circuit fuse trip due to submerge components will alarm loss of control voltage for this circuit	None
Aux. Relays 9X/O, 9X/C and starter 9/O 9/C	Valve Operation Control	Needed until valve operates as required	Will operate as required	Safety function will be performed

230V AC Vital Control Center 1B East Valves - Circuit Section 5A				
SUBMERGED ELECTRIC COMPONENTS IN CONTAINMENT				
Component	**Function**	**Accident/Safety Requirements**	**Analysis**	**Results/Effects**
1CV284 (Motor operated)	Reactor Coolant Pump Seal Water Return (Containment Isolation Valve)	Valve closes for an accident (P signal)	Valve closes on signal prior to valve becoming submerged (located at approx. El.79')	Safety function will be performed
Limit and Torque Switches for Valve 1CV184	Control and position indications for valve 1CV184	Control portion of function needed until valve operates as required	Same analysis as above for the valve itself	Safety function will be performed
230V AC Vital Control Center 1B East Valves - Circuit Section 5A				
NONSUBMERGED ELECTRIC COMPONENTS IN CONTAINMENT				
Component	**Function**	**Accident/Safety Requirements**	**Analysis**	**Results/Effects**
Aux. Relays 33X/SWB 33Y/SWB	Valve position indications for 1CC284	Indicate containment isolation	Breaker trip components will cause loss of position indication	Redundant valve position indication will indicate containment isolation
Relay 74AC/SWB	Provides loss of 115V AC control voltage for 1CC284 control circuit	None	230 Breaker/Control circuit fuse trip due to submerged components will alarm loss of control voltage for this circuit	None
Aux. Relays 9X/O, 9X/C and starter 9/O 9/C	Valve Operation Control	Needed until valve operates as required	Will operate as required	Safety function will be performed
*Circuit Protection - Motor Control Center circuit provided with manual Class 1E circuit breaker. Vent fan motor power circuit protected by open motor starter contactor. Control circuit (developed from a 230/115V transformer) is protected by 15 amp fuses.				

SUBMERGED ELECTRICAL COMPONENTS IN CONTAINMENT

Jun/Ter Box	Functions	Circuit Affiliation	Accident/Safety Requirements	Analysis	Results/Effects
EJN-140 (Unit 2 EJN-148)	Terminations for Limit Switches for valve 1PR17	1AADC - No. 12	Indicate containment isolation	Breaker trip due to components will cause loss of position indication	Valve 1PR17 safety function will be valve 1PR18 RG 1.97 position indication will indicate containment isolation
JT 11 (Unit 2 JT-96)	Terminations for Limit Switches for Valves 11SJ20, 11SJ27, 11SJ57, 11SJ58, 11SJ93 (Position Indication)	1AADC - No. 15	None	N/A	None
JT 12 (Unit 2 JT-97)	Terminations for Limit Switches for Valves 12SJ20, 12SJ27, 12SJ57, 12SJ58, 12SJ93 (Position Indication)	1BBDC - No. 17	None	N/A	None
JT 13 (Unit 2 JT-98)	Terminations for Limit Switches for Valves 13SJ20, 13SJ27, 13SJ57, 13SJ58, 13SJ93 (Position Indication)	1CCDC - No. 17	None	N/A	None
JT 14 (Unit 2 JT-99)	Terminations for Limit Switches for Valves 14SJ20, 14SJ27, 14SJ57, 14SJ58, 14SJ93 (Position Indication)	1BBDC - No. 11	None	N/A	None

Jun/Ter Box	Functions	Circuit Affiliation	Requirements	Analysis	Effect
EJT 210	Terminations for Limit Switches for Valves 1CV2, 1CV3, 1CV75, 1CV277 (Position Indication)	1BBDC - No. 5, 7, 19	Indicate containment isolation	Breaker trip due to submerged components will position indication	Valve 1CV3 safety function will be performed. Redundant valve 1CV7 RG 1.97 position indication will indicate containment isolation
JT 212 (Unit 2 JT-213)	Terminations for Limit Switches for Valves 1CV278, 1CV131, 1CV134 (Position Indication)	1CCDC - No. 22	None	N/A	None
JT 122 (Unit 2 JT-123)	Terminations for Limit Switches for Valves 11SJ162, 12SJ162, 1SJ159, 13SJ162, 14SJ162, 1SJ163 (Position Indication)	1DDC - No. 16, 28	None	N/A	None

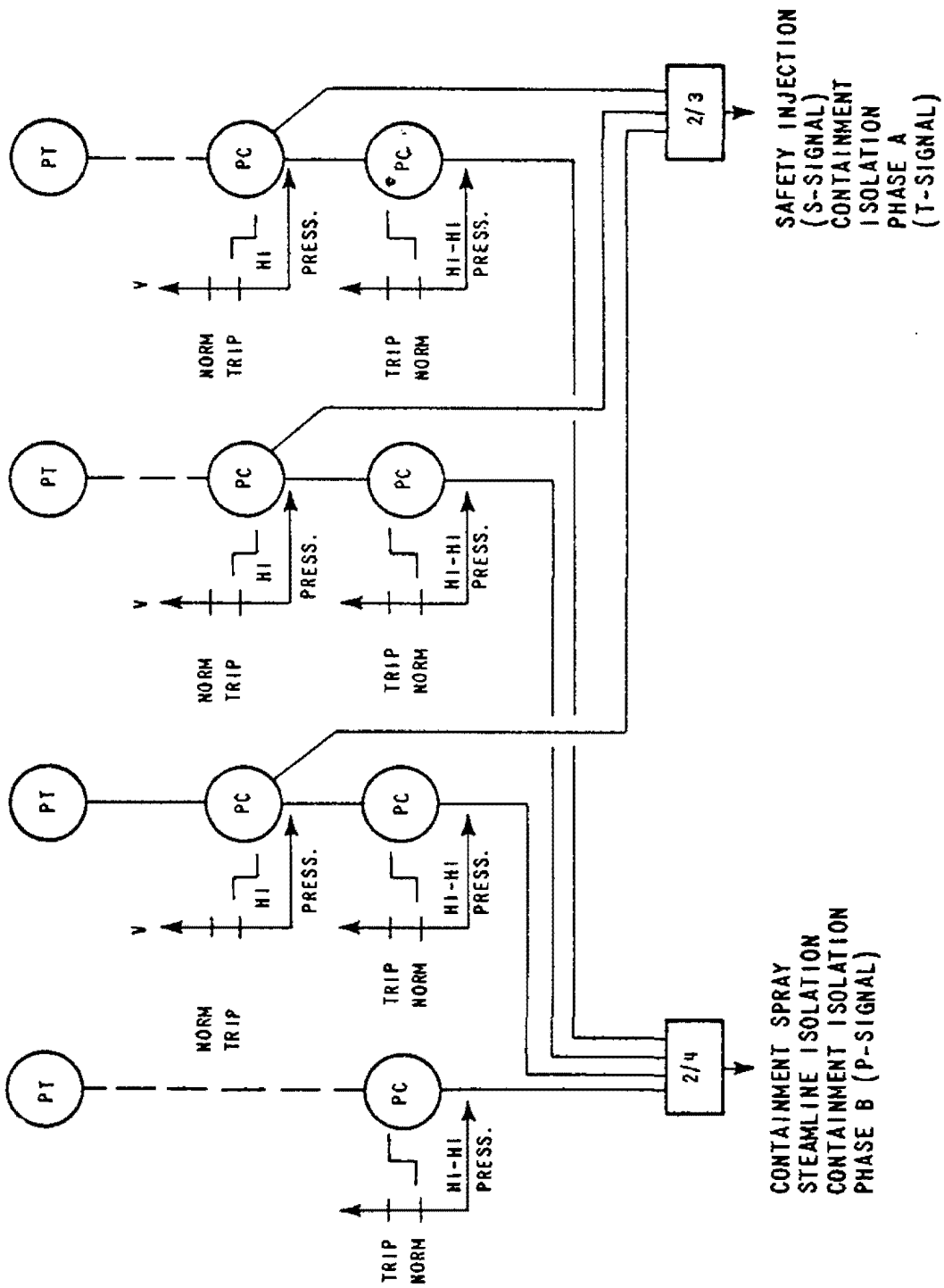

REVISION 6
FEBRUARY 15, 1987

PUBLIC SERVICE ELECTRIC AND GAS COMPANY SALEM NUCLEAR GENERATING STATION	Containment Pressure Instrumentation	
	Updated FSAR	Figure 7.3-1

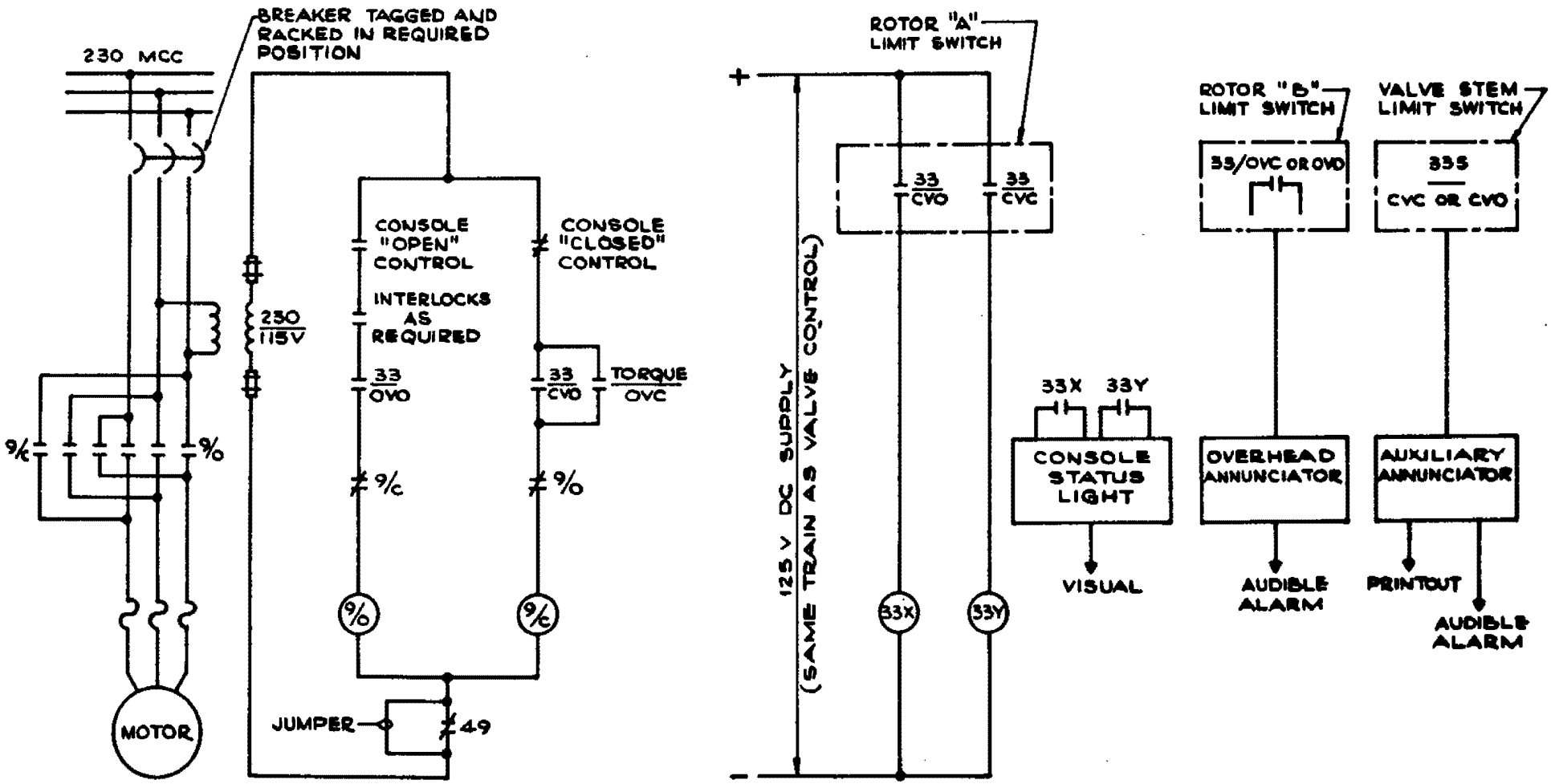

REVISION 6
FEBRUARY 15, 1987

PUBLIC SERVICE ELECTRIC AND GAS COMPANY SALEM NUCLEAR GENERATING STATION	Typical MOV 230 V Power Lockout
	Updated FSAR — Figure 7.3-2

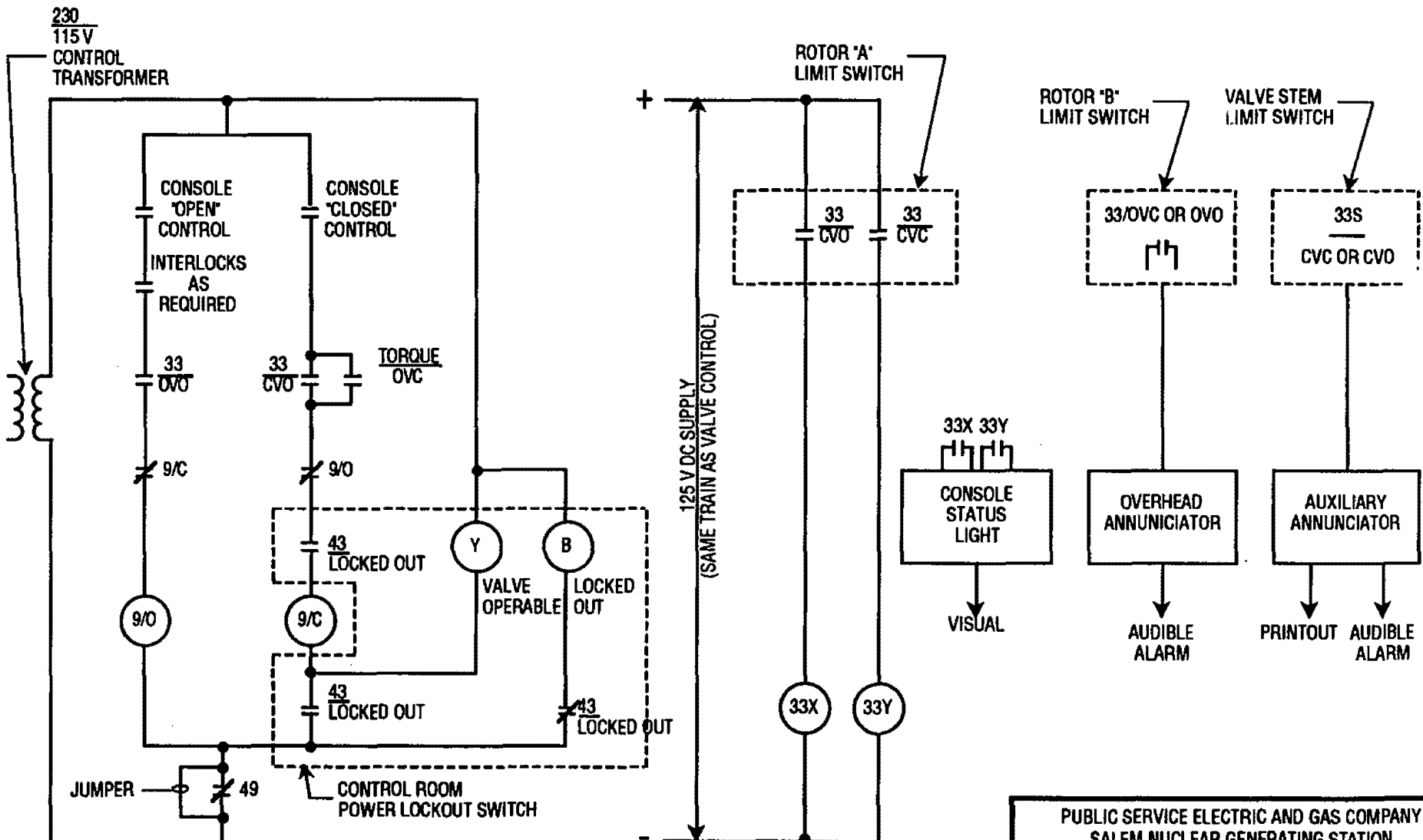

PUBLIC SERVICE ELECTRIC AND GAS COMPANY
SALEM NUCLEAR GENERATING STATION

TYPICAL MOV CONTROL POWER LOCKOUT WITHOUT INTERPOSING RELAY

Updated FSAR
Revision 13, June 12, 1994

Sheet 1 of 1
Figure 7.3-3

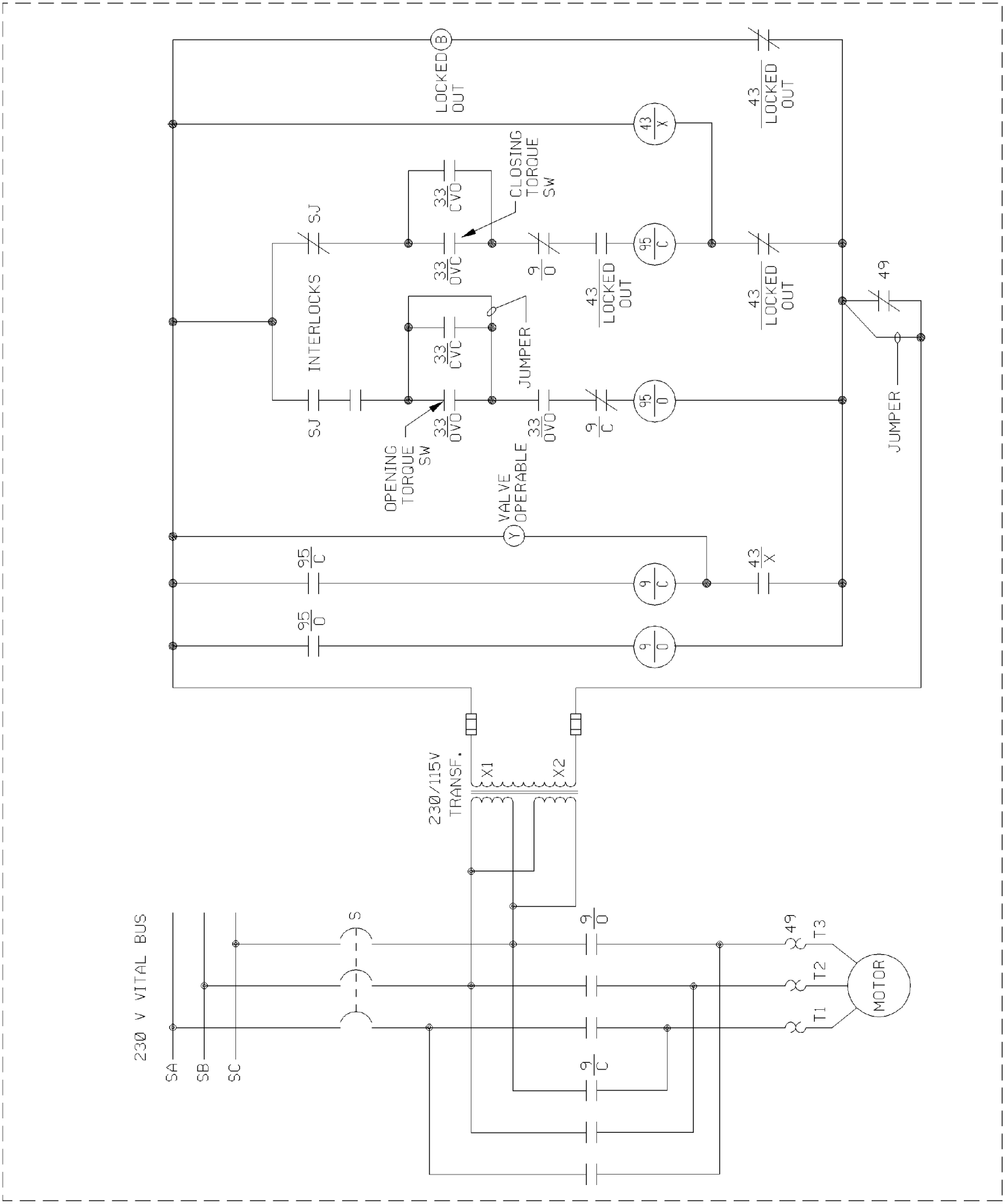

Revision 20, May 6, 2003

PSEG Nuclear, LLC SALEM NUCLEAR GENERATING STATION	Salem Nuclear Generating Station TYPICAL MOV CONTROL POWER LOCKOUT WITH INTERPOSING RELAY
	Updated FSAR — Figure 7.3-4

© 2000 PSEG Nuclear, LLC. All Rights Reserved.

7.4 Systems Required for Safe Shutdown

The process of attaining safe shutdown in accordance with Branch Technical Position RSB 5-1 is described in Section 5.5. Equipment for attaining safe shutdown from outside the Control Room is discussed in the following sections.

7.4.1 Hot Shutdown Outside the Control Room

The probability of the Control Room becoming inaccessible as a result of any cause is considered extremely small. If the operator must leave the Control Room, however, operating procedures require that he trip the reactor and turbine generator prior to leaving, thus ensuring control at the hot shutdown control stations. If necessary, the required trips can be accomplished at locations outside the Control Room.

The reactor unit can be maintained in a hot shutdown condition from the hot shutdown control stations. The following control features are provided:

1. Core residual heat removal
2. Boration of the Reactor Coolant System
3. Pressurizer level and pressure control
4. Containment fan cooler operation

These functions require the operation of auxiliary feedwater pumps, charging pumps, boric acid transfer pumps, service water pumps, and containment fan cooler units. Appropriate process instrumentation such as pressurizer pressure and level, steam generator pressure and level, component cooling flow, and service water pressure are provided. This equipment is sufficient to safely maintain the unit in a hot shutdown condition for an extended period of time.

7.4.2 Cold Shutdown Outside the Control Room

There is no reason to assume any significant damage to equipment in the Control Room area nor is there any reason to believe that access to the Control Room could not be regained during the extended period of hot shutdown. However, we believe the plant design does not preclude the possibility of bringing the reactor to a cold shutdown condition from outside the Control Room. On a long-term basis (a week or more) an assessment of plant conditions could be made and methods established for making physical changes to instrumentation and control equipment as necessary to permit cold shutdown. The systems and equipment which would be utilized to attain cold shutdown, assuming no significant damage to equipment in the Control Room area, are given below:

Process Systems

1. Heat removal - natural or forced circulation (reactor coolant pumps)
    a. Controlled steam release and feedwater supply
    b. Residual Heat Removal System
2. Boration capability
3. Nuclear Instrument System
    a. Source range and intermediate range
4. Reactor coolant inventory control
    a. Charging and letdown
5. Pressurizer pressure control
    a. Heaters
    b. Spray
    c. Relief valves
6. Control air service

Equipment

1. Reactor coolant pump
2. Auxiliary feedwater pumps
3. Boric acid transfer pumps
4. Charging pumps
5. Service water pumps
6. Containment fan coolers
7. Control Room air conditioning
8. Component cooling pumps
9. Residual heat removal pumps

10. Certain motor control center and switchgear sections

Instrumentation

1. Pressurizer
    a. Level indicators
    b. Pressure indicators
2. Steam Generators
    a. Level indicators
    b. Pressure indicators
3. Reactor coolant wide range temperature indicators
4. Reactor coolant wide range pressure indicators
5. Source range indication
6. Intermediate range indication
7. Component cooling water temperature indication
8. Reactor coolant pump instrumentation
9. Residual Heat Removal System instrumentation
10. Radiation monitors

Controls

Controls are required for all equipment listed above, and also the following:

1. Steam dump control (for atmospheric relief valve and condenser steam dump valve)
2. Feedwater supply
3. Manual control of residual heat removal throttle valves
4. Makeup of reactor coolant shrinkage by manual control of charging
5. Pressurizer heater on/off controls
6. Pressurizer relief valves

7. Pressurizer auxiliary spray open/close control
8. Reactor coolant pump oil lift pump
9. Open/close switch control of letdown isolation valve
10. Safeguards controls
    a. Defeat Safety Injection System automatic operation

7.5 Safety-Related Display Instrumentation

7.5.1 Description

Table 7.5-1 lists the major process parameters available to the operator to enable him to perform required manual functions and to determine the effect of manual actions taken following a reactor trip due to operational occurrences or accident conditions discussed in Section 15. The table lists the readouts required to maintain the plant in a hot shutdown condition or to proceed to cold shutdown within the limits of the Technical Specifications. Reactivity control after operational occurrences will be maintained by administrative sampling of the reactor coolant for boron to ensure that the concentration is sufficient to maintain the reactor subcritical.

As shown in the table, sufficient duplication of information is provided. The information is part of the operational monitoring of the plant which is under surveillance by the operator during normal plant operation. This is functionally arranged on the control board to provide the operator with timely and pertinent information on plant conditions. Comparisons between duplicate information channels or between functionally related channels will enable the operator to readily identify a malfunction in a particular channel.

The information system that provides the signals to the indicators and/or recorders listed in the table is described in Section 7.2, with the exceptions of the refueling water storage tank (RWST) level and the steam generator wide range water level. The Unit 1 RWST level is indicated by two independent single-channel systems (Unit 2 consists of four independent single-channel systems). Each steam generator water level (wide range) is indicated by independent single-channel systems and recorded by a single-channel system. No automatic protection or control functions are provided by these devices. The remaining signals are obtained through isolation amplifiers from the protection channels.

This allows the automatic protection system to function independently of any failure of the non-protection equipment and provides the most reliable means of obtaining the information.

There is no basis for assuming that the occurrence of an accident itself degrades the Display System. Therefore, the status and reliability of the information is known to the operator before, during, and after the accident.

The design criteria used in the Display System are listed below:

1. Range and accuracy requirements are determined through the analyses of postulated occurrences as described in Section 15. The display meets the following requirements:

    a. The range of the readouts extends over the maximum expected range of the variable being measured.

    b. The combined indicated accuracies are within the errors assumed in the safety analyses.

2. Power for the display instruments is obtained from the 115 V power system described in Section 8.

3. Those channels which have been determined to provide useful information in charting the course of events are recorded.

Table 7.5-2 lists the indications available to the operator to monitor significant plant parameters during normal operation.

7.5.2 Bypass Indication

The Containment Spray System is a typical Engineered Safety Features (ESF) System which incorporates status indications. The spray pumps and the system motor-operated valves have open/close lights on the main control console pushbutton stations and loss of control voltage alarms in the Auxiliary Alarm System. The spray additive tank valve, 1CS14, also has an "off-normal" position alarm on the overhead annunciator.

Any equipment taken out of service for maintenance or other purposes is under the administrative control of the plant operating personnel, which includes logging of unavailable equipment and covering the control station with a plastic cover.

Bypasses of the Solid State Protection System (SSPS) outputs associated with the spray system are described below.

In general, if any analog channel in the ESF Actuation System is taken out of service for any reason, the channel is placed in the tripped mode, and a channel trip status light is lit in the Control Room. In addition, an alarm will sound and an associated annunciator panel light will be lit. This holds true for the containment pressure channel associated with safety injection and steam line isolation functions. The channel bistable output relays associated with the containment spray function are not tripped, to reduce the possibility of inadvertent actuation, but are bypassed for test and maintenance purposes. An alarm indicating a bypassed condition is provided for each channel.

The plant design includes one or a combination of the following indications to show the operator the status of plant systems and to highlight the existence of an incorrect configuration:

1. Indication lights (red-open and green-closed) at the push-button control station for valves.

2. A separate monitor light indication grouped with lights for other devices having a similar function such that the lights in the group are all on or are all off to provide for quick operator evaluation of systems status during the injection or recirculation mode of a Loss-of-Coolant Accident (LOCA).

3. Auxiliary annunciation redundant to the above indications which serves to alert the operator of the improper state, relative to plant conditions, of a critical device (pump, valve, etc.).

By looking at equipment status indications, an operator can determine if components in the ESF Systems have been isolated or bypassed.

The following alarms have been provided in the Control Room to indicate test of bypass for ESF Systems:

Spray channel comparator tripped (4 alarms)

Spray channel comparator on test (4 alarms)

Solid state protection Train A trouble

Solid state protection Train B trouble

Solid state protection Train A on test

Solid state protection Train B on test

Reactor protection channel on test (4 alarms)

Nuclear instrument channel on test

Rod position indication on test

Safeguards Equipment Control Systems on test (3 alarms)

NIS loss of detector of compensation voltage (5 alarms)

1 (2) PR1 CHANNEL UNSAFE (comparator on test)

1 (2) PR2 CHANNEL UNSAFE (comparator on test)

1 (2) PR1 1/2 TRIP (channel comparator tripped)

1 (2) PR2 1/2 TRIP (channel comparator tripped)

NIS source range high flux at shutdown blocked

NIS source and intermediate range trip bypass

Diesel generator urgent trouble (3 alarms)

Diesel generator fuel oil day tank trouble

4 kV vital bus alarms (18 alarms)

The following lights on the status panel indicate bypass conditions:

Source range trip blocked (2 lights)

Source range Trains A and B trip blocked

Intermediate range trip blocked (2 lights)

Intermediate range trip A and B trip blocked

Power range (low setpoint) Trains A and B trip blocked

Steamline isolation Trains A and B safety injection blocked

Safety injection blocked Trains A and B

Automatic Safety Injection blocked

Overpower rod stop manual bypass (4 lights)

Steam dump block T average bypass

The system has been designed to meet the intent of IEEE Standard 279-1971, Paragraph 4.12; that is, bypasses are removed automatically when permissive conditions are not met.

7.5.3 Evaluation

An evaluation of Salem Unit 2 Instrumentation Systems to determine the degree of compliance with Regulatory Guide 1.97 has been completed. Since the Salem design bases for instrument systems were developed and approved by the NRC significantly prior to the issuance of this Guide, the evaluation was based on compliance with the overall intent of the Guide.

Demonstration of compliance with the intent of the Regulatory Guide required that any specific differences between the Salem design bases and those of the Regulatory Guide be identified. The identification of these differences is specified in Section 7.5.3.1.

The key elements of the overall evaluation can be summarized as follows:

1. Compliance of existing systems and instrumentation is based upon meeting the intent of the Regulatory Guide.

2. Compliance of new equipment is based upon application of the Regulatory Guide to the extent that existing design can accommodate the change without compromising the existing system.

3. Previous commitments to modify existing equipment or to add new equipment were considered (e.g., NUREG-0588 and NUREG-0737) in the context of those commitments which pre-date Regulatory Guide 1.97.

The results of this evaluation have been classified into five basic types of "compliance levels." These compliance levels have been selected to illustrate the resolution actions planned for the equipment to demonstrate the overall plant compliance with Regulatory Guide 1.97. This information is included in Sections 7.5.3.2 and 7.5.3.3.

7.5.3.1 Identification of Design Basis Differences from Regulatory Guide 1.97

To establish a baseline set of criteria for this evaluation, Regulatory Guide 1.97 recommendations have been reviewed for similarity to the Salem Station design bases. In those instances where the Salem bases agree with Regulatory Guide 1.97, no differences are listed below. For those cases which involve differences, a comparison is provided below to demonstrate that the intent of the Guide is adequately achieved.

1. The Salem Station design bases were effectively established prior to issuance of the Regulatory Guides referenced in Regulatory Guide 1.97. Although the Salem Station conforms to the intent of the Regulatory Guides, strict compliance has not been required. In many cases, the Guides have been revised to incorporate subsequent revisions of referenced standards; and in some cases, the Guides are not applicable to the previously approved design (e.g., Regulatory Guide 1.75).

   For the purpose of compliance with Regulatory Guide 1.97, the Salem design will conform with the intent of the referenced Guides and Standards to the same extent as specified in previous responses to the NRC on the subject documents.

2. Regulatory Guide 1.89 - "Qualification of Class 1E Equipment for Nuclear Power Plants." The Salem Station review basis is NUREG-0588, Category II for existing instrumentation and NUREG-0588, Category I (i.e., IEEE Standard 323-74) for new equipment. Evaluations for equipment in harsh environments have been completed. Evaluations for noncontrolled benign environments will be completed per NRC established schedules.

   Recorders, indicators, and other instrumentation located in controlled benign environments, such as the Control Room, have been considered as meeting the intent of Regulatory Guide 1.97, pending the completion of the NUREG-0588 benign environment review.

3. Regulatory Guide 1.100 - "Seismic Qualification of Electric Equipment for Nuclear Power Plants." The Salem Station review basis is IEEE Standard 344-71 for existing equipment and IEEE Standard 344-74 for new equipment.

4. Regulatory Guide 1.75 - "Physical Independence of Electric Systems." The Salem Station Electric Systems do not conform to the recommendation in Regulatory Guide 1.75, since this was not an original design criterion. New equipment will be integrated

into our existing separation provisions. The Salem separation criteria have been approved by the NRC staff as described in Section 7.8 of the original and Supplement 1, and Section 8.4.5 of Supplements 3 and 4 of the Safety Evaluation Report.

5. Regulatory Guide 1.32 - "Criteria for Safety-Related Electric Power Systems for Nuclear Power Plants." The Salem Station review basis is IEEE Standard 308-71, "Class 1E Electric Systems for Nuclear Power Generating Stations."

6. Quality Assurance: Regulatory Guides

   a. Regulatory Guide 1.28, "Quality Assurance Program Requirements (Design and Construction)" Revision 2, dated February 1979. The Salem Station review basis is Safety Guide 28, which endorses ANSI 45.2.1 of 1971.

   b. Regulatory Guide 1.38, "Quality Assurance Requirements for Packaging, Shipping, Receiving, Storage, and Handling of Items for Water-Cooled Nuclear Power Plants," Revision 2, dated May 1977. The Salem Station review basis is Regulatory Guide 1.38, Revision 1, dated October 1976.

   c. Regulatory Guide 1.64, "Quality Assurance Requirements for the Design of Nuclear Power Plants," dated June 1976. The Salem Station review basis is Regulatory Guide 1.64, Revision 0, dated October 1973.

   d. Regulatory Guide 1.123, "Quality Assurance Requirements for Control of Procurement of Items and Services for Nuclear Power Plants," dated July 7, 1977. The Salem Station review basis is ANSI 45.2.13, of 1976.

   e. Regulatory Guide 1.144, "Auditing of Quality Assurance Programs for Nuclear Power Plants," Revision 1, dated September 1980. The Salem Station review basis is ANSI 45.2.12, Draft 4, Revision 2.

   f. Regulatory Guide 1.146, "Qualification of Quality Assurance Program Audit Personnel for Nuclear Power Plants," dated August 1980. The Salem Station review basis does not include a commitment to Regulatory Guide 1.146.

7. Unique Identification: The instruments are not specifically identified on the control panels as those intended for use under accident conditions. The instrumentation on the control panels in the Salem Control Room is presently grouped on a functional basis. Additional markings could add confusion to a control panel layout that was favorably reviewed during the NRC "Human Factors Review of the Salem No. 2 Unit Control Room" in March 1980.

8. Regulatory Guide 1.118 – "Periodic Testing of Electric Power and Protection Systems". The Regulatory Guide invokes the requirements of IEEE Standard 338-1975, which is applicable to protection for Regulatory Guide 1.97, is not considered to be part of the Protection System and does not require all of the testing specified in IEEE Standard 338. The plant equipment being used for compliance with Regulatory Guide 1.97 has

been designed to incorporate testing capabilities as discussed in Section 7.2. Testing frequencies will be in accordance with the applicable Technical Specifications.

9. Type "A" Variables (Plant Specific)

The definition of Type "A" Variables given by Regulatory Guide 1.97, Paragraph 1.1 is:

"Those variables to be monitored that provide the primary information required to permit the control room operators to take the specified manually controlled actions for which no automatic control is provided and that are required for safety systems to accomplish their safety functions for design basis events."

The Salem Emergency Operating Procedures were reviewed to determine which Regulatory Guide 1.97, Type "A" parameters are required using the following baseline interpretation of Regulatory Guide 1.97, Paragraph 1.1.

The operating procedures specify certain operator verification of automatic actions and, if the automatic actions have not been performed (presumably due to system failure), the operator is required to manually perform those actions. The parameter selection does not include either the verification step or the manual backup action. The parameter selection includes those required for operator actions needed for system functioning where no automatic signal/system exists.

Where important, the manual Type "A" operator actions must be monitored to assure that the action has been performed. This monitoring of Type "A" operation is performed by "Type B" variables as defined by Regulatory Guide 1.97.

In reviewing the Emergency Operating Procedures, the event "end point" for parameter selection is a stable hot condition for all events except LOCAs (large or small) that cannot be isolated. The "end point" for LOCAs that cannot be isolated is a cold depressurized condition.

See Table 7.5-3 for an index of Class "A" Variables.

7.5.3.2 Regulatory Guide 1.97 Compliance Levels

The evaluation revealed varying degrees of compliance with Regulatory Guide 1.97 which were classified into five "compliance levels." These classifications evolved from consideration of the design bases, existing NRC commitments and specific new changes, where possible, to meet the Regulatory Guide. The overall results of this effort are summarized in Table 7.5-4. Table 7.5-5 provides justification for Regulatory Guide nonconformances. Most Regulatory Guide 1.97 variables are displayed on the Safety Parameter Display System (SPDS). SPDS monitors are located in the Unit 1 and Unit 2 Control Rooms, Technical Support Center and the Emergency Operations Facility. The SPDS is discussed in Section 7.10.

The description of each "compliance level" is provided below.

Items in Compliance

The items categorized under this heading meet the Public Service Electric & Gas (PSE&G) design basis as outlined in Section 7.5.3.1.

Items Where Design Precludes Compliance

The items categorized under this heading are presently installed, but, by nature of the present design, may not meet the recommendations in the Guide, such as environmental and seismic qualifications. These items are generic to Westinghouse plants.

Items Which Are Being Replaced/Added

The items categorized under this heading deviate from one or more recommendations in the Guide. These items will be replaced with devices modified to meet the appropriate recommendations. Replacement/installation/ modification for each item will be made to:

1. Meet requirements imposed by other documents such as NUREG-0588 and NUREG-0737

2. Meet the recommendations of Regulatory Guide 1.97.

Items Which Are Not Being Replaced

The items categorized under this heading are presently installed, but deviate from one or more recommendations of the Guide. This is based on:

1. Devices located in non-harsh environment that require qualification review in accordance with NUREG-0588 for benign environments which will be completed by June 30, 1982.

2. Devices located in a harsh environment that are not utilized in accident emergency instructions for operators to maintain plant safety.

3. Devices currently meeting Technical Specification requirements but the specified ranges do not meet the recommendations in Regulatory Guide 1.97.

<u>Items Not Part of Salem Design</u>

The items categorized under this heading are not part of the Salem design and are not being installed. Alternate capabilities are available which meet or will meet our requirements and provide adequate information for maintenance of plant safety.

7.5.3.3 Planned Actions

Compliance Level 1

No action planned. The instrumentation in this compliance level meets the intent of Regulatory Guide 1.97 in accordance with the criteria specified in Section 7.5.3.1.

Compliance Level 2

No equipment replacement is planned at this time pending resolution of generic problems.

Compliance Level 3a

Instruments are being replaced or upgraded as a result of prior commitments related to NUREG-0588 and NUREG-0737. The devices will comply with Regulatory Guide 1.97 in accordance with the criteria specified in Section 7.5.3.1 by the dates specified in previous correspondence to the NRC staff.

Compliance Level 3b

Instruments will be upgraded to meet Regulatory Guide 1.97 in accordance with the criteria specified in Section 7.5.3.1 by June 1, 1983, or as otherwise committed on a case-by-case basis with the NRC.

Compliance Level 4a

The equipment will be evaluated in accordance with the requirements of the NUREG-0588 benign environment review, and appropriate actions will be taken where required.

Compliance Level 4b

No action planned. The importance of the device is deemed to be relatively low or insignificant.

Compliance Level 4c

The existing devices comply with Technical Specification requirements and should not be modified.

Compliance Level 5

No action planned. Other provisions exist which negate the need for the instrumentation.

All items currently planned to remain unchanged have been evaluated for potential effects on plant safety. This evaluation concludes that plant safety is not affected by the lack of compliance to Regulatory Guide 1.97.

7.5.3.4 Relocated Requirements

Amendments Nos. 320 and 301 relocated the following accident monitoring instrumentation from the Technical Specifications.

Relocated Requirements		
Instrument	**Required No. of Channels**	**Minimum No. of Channels**
Reactor Coolant System Sub-cooling Margin Monitor	2	1
PORV Position Indicator (Unit 2 only)	2/valve**	1
PORV Block Valve Position Indicator	2/valve**	1
Pressurizer Safety Valve Position Indicator	2/valve**	1
Containment Pressure (Narrow Range)	2	1

** Total number of channels is considered to be two (2) with one (1) of the channels being any one (1) of the following alternate means of determining PORV, PORV Block, or Safety Valve position: Tailpipe Temperatures for the valves, Pressurizer Relief Tank Temperature Pressurizer Relief Tank Level functional.

Parameter	Channel Available	Range	Accuracy	Indicator/ Recorder	Purpose
OPERATIONAL OCCURRENCES					
1. Tcold or Thot (measured, wide range	1Thot 1Tcold/ Loop	0-700°F	±4% of full range	All channels are recorded	Ensure maintenance of proper cooldown rate and to ensure maintenance of proper relation-temperature NDTT considerations.
2. Pressurizer water level	3	Entire distance between taps (528"approx)	±4.2% of span level at 2250 psia	All three channels indicated; one channel is selected for recording	Ensure maintenance of proper reactor coolant inventory.
3. System pressure	2	0-3000 psig	±5.5% of full range	Indicated and recorded	Ensure maintenance of proper relationship between system pressure and temperature for NDTT considerations.
4. Containment pressure	4	0-115% of design pressure (-5 to +55 psig)	±5.5% of full scale	All four are indicated; two are also recorded	Monitor containment conditions to indicate need for potential safeguards actuation.
5. Steam line pressure	3/loop	0-1200 psig	±5.5% of full scale	All channels are indicated	Monitor steam generator temperature conditions during hot shutdown and cooldown, and for use in recovery from steam generator tube ruptures.

Parameter	Channel Available	Range	Accuracy	Indicator/ Recorder	Purpose
OPERATIONAL OCCURRENCES (Cont.)					
6. Steam generator water level (wide range)	1/steam generator	0-100%	Refer to Applicable Loop Accuracy Calculation	All channels recorded	Ensure maintenance of reactor heat sink.
7. Steam generator water level (narrow range)	3/steam generator	0-100%	Refer to Applicable Loop Accuracy Calculation	All channels indicated; the channels used for control are recorded	Ensure maintenance of reactor heat sink.
ACCIDENT CONDITIONS					
1. Containment pressure	4	0-115% of design pressure (-5 to +55 psig)	±5.5% of full span	All four are indicated; two are also recorded	Monitor post-LOCA containment conditions.
	2	(-15 to +165 psig)		Both are recorded	
2. Refueling water storage tank water level	2	0-100% of (48 ft/H_2O)	±3% of level span	Both are indicated and alarmed	Ensure that water is flowing to the safety injection system after a LOCA and determine when to shift from injection to recirculation mode.
3. Steam generator water level (narrow range)	3/steam generator	0-100%	Refer to Applicable Loop Accuracy Calculation	All channels indicated; the channels used for control are recorded	Detect steam generator tube rupture; monitor steam generator water level following a steam line break.

Parameter	Channel Available	Range	Accuracy	Indicator/ Recorder	Purpose
ACCIDENT CONDITIONS (Cont.)					
4. Steam generator water level (wide range)	1/steam generator	0-100%	Refer to Applicable Loop Accuracy Calculation	All channels are recorded	Detect steam generator tube rupture; monitor steam generator water level following a steam line break.
5. Steam line pressure	3/steam line	0-1200 psig	±7.5% of full scale	All channels are indicated	Monitor steam line pressures following steam generator tube rupture or steam line break.
6. Pressurizer water level	3	Entire distance between taps (528" Approx)	Indicate the level is somewhere between 0 and 100 of span	All three indicated and one is for recording	Indicate that coolant inventory restored in pressurizer following cooldown after steam generator tube rupture or steam line break.
7. Containment hydrogen level	2	0-10% vol	2% of full scale	Both channels are recorded	NUREG 0737
8. Containment area monitors (high range)	2	1-107R/hr		Both channels are recorded	NUREG 0737
9. Reactor vessel level	2	Hot leg – top of RV	6% without RCPs running	One channel recorded	Detect inadequate core cooling.
	4	Bottom – top of RV		One set recorded	
10. Containment liquid level	2			Both channels are recorded	

Parameter	Channel Available	Range	Accuracy	Indicator/ Recorder	Purpose
ACCIDENT CONDITIONS (Cont)					
11. Neutron flux	2	10^{-8} amps -120% wide range log power	±10.5% of full span	Both are indicated and alarmed	Indication of neutron flux during and following an accident
12. Core Exit Thermocouples (1)	2 (29 TC's each channel)	32°F – 2300°F	(2) (3)	Both channels are indicated	NUREG 0737
13. Margin to Saturation	2	± 999°F 0-250°F 0-25°F	(4)	Both Channels recorded and indicated	Detect inadequate core cooling

(1) The CET subsystem which is part of the In-Core Instrumentation System, has been upgraded to EQ to ensure availability post accident. However, since the balance of the In-Core Instrumentation is non-safety related, the FSAR text on the CET subsystem remains under Section 7.7 of the FSAR.

(2) Accuracy of the representative core exit T/C temperature (instrument and rack error) ±6°F/random + 3°F (bias).

(3) Process measurement accuracy:

Core Condition	Error
Covered core	+8° to -11°F bias
Core uncovered and CET at 700°F	-85°F bias
Core uncovered and CET at 1200°F	-140°F bias

(4) The indicated margin to saturation is automatically adjusted by the subcooling margin monitor computer for errors that could cause indication to be higher than actual. This provides the operator with reasonable confidence that the RCS fluid will be subcooled at the core exit whenever a positive margin to saturation is indicated on the display units.

Parameter	No. of Channels Available	Range	Accuracy	Indicator/ Recorder	Notes
NUCLEAR INSTRUMENTATION					
1. Source Range					
a. Count rate	2	1 to 10^6 counts/sec	±7% of the linear full scale analog voltage	Both channels indicated. Either may be selected for recording.	One two-pen recorder is used to record any of the 8 nuclear channels (2 source range, 2 intermediate range and 4 power range).
b. Startup rate	2	-1.0 to 5.0 decades/min	±7% of the linear full scale analog voltage	Both channels indicated.	
2. Intermediate Range					
a. Flux level	2	10^{-11} to 10^{-3} amp	±7% of the linear full scale analog voltage and ±3% of the linear full scale voltage in the range of 10^{-4} to 10^{-3} amps	Both channels indicated. Either may be selected for recording using the recorder in Item 1 above.	
b. Startup rate	2 decades/min	-1.0 to 5.0 full scale analog	±7% of the linear indicated.	Both channels	
3. Power Range					
a. Uncalibrated ion chamber current (top and bottom uncompensated ion chambers)	4	0 to 120% of full power current	±1% of full power	All 8 current signals indicated	

Parameter	No. of Channels Available	Range	Accuracy	Indicator/ Recorder	Notes
NUCLEAR INSTRUMENTATION					
b. Calibrated ion chamber current (top and bottom uncompensated ion chambers)	4	0-120% of full power	±2% of full power	All 8 current signals recorded (four 2-pen recorders) Recorder 1 – upper and lower currents for Channel 1 Recorder 2 – upper And lower currents for Channel 2 Recorder 3 – upper and lower currents for Channel 1 Recorder 4 – upper and lower currents for Channel 1	
c. Not used					
d. Average flux of the top and bottom ion chambers	4	0 to 120% of full power	±3% of full power for indication ±2% for recording	All 4 channels indicated. Any 2 of the 4 channels may be recorded using recorder in Item 1 above.	

Parameter	No. of Channels Available	Range	Accuracy	Indicator/ Recorder	Notes
NUCLEAR INSTRUMENTATION (Cont.)					
e. Average flux of the top and bottom ion chambers	4	0 to 200% of full power	±2% of full power to 120 ±6% of full power to 200%	All 4 channels recorded.	
f. Flux difference of the top and bottom ion chambers	4	-30 to +30%	±4%	All 4 channels indicated.	
REACTOR COOLANT SYSTEM					
1. Taverage (measured)	1/loop	540 - 615°F	±4°F	All channels indicated.	
2. ΔT (measured)	1/loop	0 to 150% of full power ΔT	±4% of full power ΔT	All channels indicated. One channel is selected for recording.	
a. Tcold or Thot (measured, wide range)	1-Thot and1-Tcold per loop	0 - 700°F	±4°F	Both channels recorded.	

Parameter	No. of Channels Available	Range	Accuracy	Indicator/ Recorder	Notes
REACTOR COOLANT SYSTEM (Cont.)					
3. Overpower ΔT Setpoint	1/loop	0-75°F	±4% of full power ΔT	All channels indicated. One channel is selected for recording.	
4. Overtemperature T Setpoint	1/loop	0-75°F	±4% of full power ΔT	All channels indicated. One channel is selected for recording.	
5. Pressurizer Pressure	4	1700 to 2500 psig	±51.0 psi	All channels indicated. One channel is selected for recording	
6. Pressurizer Level	3	Entire distance between taps 0-100%	±4.2% span level at 2250 psia	All channels indicated. One channel is selected for recording.	Two-pen recorder used, second pen records reference level signal
7. Primary Coolant Flow	3/loop	0 to 120% of rated flow	Repeatability of ±4% of full flow	All channels indicated.	
8. System Pressure	2	0 - 3000 psig	±5.5%	All channels indicated and recorded.	

Parameter	No. of Channels Available	Range	Accuracy	Indicator/ Recorder	Notes
REACTOR CONTROL SYSTEM					
1. Demanded rod speed	1	0 to 100% of rated speed	±2%	The one channel is indicated.	
2. Auctioneered $T_{average}$	1	540° to 615°F	±4°F	The one channel is recorded.	Any one of the T_{avg} channels into the auctioneer may be bypassed.
3. $T_{reference}$	1	540° to 615°F	±4°F	The one channel is recorded.	
4. Control rod Position					If system not available, borate and sample accordingly.
a. Number of steps of demanded rod withdrawal	1/group	0 to 230 steps	±1 step	Each group is indicated during rod motion.	These signals are used in conjunction with the measured position signals (4c) to detect deviation of any individual rod from the demanded position. A deviation will actuate an alarm and annunciator.
b. Demanded position of the part length rod bank.	1	0 to 230 steps	±1 step	The bank is indicated during rod motion.	

Parameter	No. of Channels Available	Range	Accuracy	Indicator/ Recorder	Notes
REACTOR CONTROL SYSTEM (Cont.)					
c. Full length rod measured position	1 for each rod	0 to 230 steps	Unit 1, +12 steps (100%≤RTP≥0%) Unit 2, ±12 steps (RTP>85%) ±18 steps (RTP≤85%)	Each rod position is indicated.	Rod position indicators are required to be calibrated within ±12 steps.
5. Control rod bank demanded position	4	0 to 230 steps	±2.5% of total travel	All 4 control rod bank positions are recorded along with the low-low limit alarm for each bank.	1. One channel for each control bank. 2. An alarm and annunciator is actuated when the last rod control bank to be withdrawn reaches the withdrawal limit, when any rod control bank reaches the low insertion limit, and when any rod control bank reaches the low-low insertion limit.

Parameter	No. of Channels Available	Range	Accuracy	Indicator/ Recorder	Notes
CONTAINMENT SYSTEM					
Containment pressure	4	0 - 115 of design pressure (-5 to +55 psig)	±5.5% of full span	All 4 channels indicated and 2 are also recorded.	
FEEDWATER AND STEAM SYSTEMS					
1. Auxiliary feedwater flow	1/steam line	0-250000 PPH		All channels indicated	One channel to measure the flow to each steam generator
2. Steam generator level (narrow range)	3/steam generator	0-100%	Refer to Applicable Loop Accuracy Calculation	All channels indicated. The channels used for control are recorded.	
3. Steam generator level (wide range)	1/steam generator	0-100%	Refer to Applicable Loop Accuracy Calculation	All channels recorded.	
4. Programmed steam generator level signal	1/steam generator	0-100%	Refer to Applicable Loop Accuracy Calculation	All channels indicated.	
5. Main feedwater flow	2/steam generator	0 to 120% of maximum calculated flow	±5%	All channels indicated. The channels used for control are recorded.	

Parameter	No. of Channels Available	Range	Accuracy	Indicator/ Recorder	Notes
FEEDWATER AND STEAM SYSTEMS					
6. Magnitude of signal controlling main and bypass feedwater control valves	1/main 1/bypass	0 to 100% of valve opening	±1.5%	All channels indicated.	1. One channel for each main and bypass feedwater control valve 2. OPEN/SHUT indication is provided in the control room for each main and bypass feedwater control valve.
7. Steam flow	2/steam generator	0 to 120% of maximum calculated flow	±10%	All channels indicated. The channels used for control are recorded.	
8. Steam line pressure	3/loop	0 to 1200 psig	±5.5%	All channels indicated and 1 is recorded.	
9. Steam dump modulated signal	1	0 - 85% max calculated steam flow	±1.5%	The one channel is indicated	OPEN/SHUT indication is provided in the control room for each steam dump valve.
10. Turbine steamline inlet pressure	2	0 to 120% to max calculated turbine load	±3.5%	Both channels indicated.	OPEN/SHUT indication is provided in control room for each turbine stop valve.

Variable Description	Variable Reference No.
Neutron Flux*	1
Reactor Coolant System Hot Leg Water Temperature	5
Reactor Coolant Pressure	6
Deleted**	
Containment Pressure – Wide Range***	11
Refueling Water Storage Tank Level	27
Pressurizer Level	30
Steam Generator Pressure	36
Auxiliary Feedwater Flow	39
Auxiliary Feedwater Storage Tank Level (Condensate Storage Tank)	40
Steam Generator Water Level – Narrow Range	35a

* The Gamma-Metrics Post-Accident Neutron Monitor (PANM) meets RG 1.97 requirements for a Type-A instrument.

** Degrees of sub-cooling (the sub-cooling margin monitor) serves as a back-up to core-exit thermocouples and reactor pressure, and hence is a Type B instrument and is deleted from this table.

*** Containment pressure, wide range, is a Type A variable. Containment pressure, narrow range, is Type B because the wide range instruments meet the Type A requirements.

Variable Ref. No.	Variable Description	Compliance Level
1	Neutron Flux (Gamma-Metrics Post-Accident Neutron Monitor (PANM)	1
2	Control Rod Position	1
3	RCS Soluble Boron Concentration	1
4	RCS Cold Leg Water Temperature	
	– RTDs	Unit 1-3a
		Unit 2-1
	– Indication	Unit 1-3b
		Unit 2-1
5	RCS Hot Leg Water Temperature	
	– RTDs	3a
	– Indication	Unit 1-3b
		Unit 2-1
6	RCS Pressure – Transmitters	Unit 1-3a
		Unit 2-1
7	Core Exit Temperature – Thermocouples	1
8	Coolant Level in Reactor	1
9	Degrees of Subcooling – Display (inputs – See variable Ref. No. 6 and 7)	1
10	Containment Sump Water Level – Transmitters and Level Switches	3a
11	Containment Pressure	
	Wide Range Transmitters	1
	Narrow Range Transmitters	1
12	Containment Isolation Valve Position (excluding check valves) – Limit Switches	1
13	Radioactivity Concentration or Radiation Level in Circulating Primary Coolant	5
14	Analysis of Primary Coolant (Gamma Spectrum)	5
15	Containment Area Radiation – Monitors	3a
16	Effluent Radioactivity – Noble Gas Effluent from Condenser Air Removal System Exhaust – Monitors	1
17	Containment Hydrogen Concentration – Analyzers	3a
18	Containment Effluent Radioactivity Noble Gases from Identified Release Points – Monitors	3b
19	Deleted	
20	RHR System Flow – Transmitters	3a
21	RHR Heat Exchanger Outlet Temperature – Thermocouples	4b
22	Accumulator Tank Level and Pressure –	
	– Transmitters	
	– Transmitter Range	
23	Accumulator Isolation Valve Position	1
24	Boric Acid Charging Flow – Transmitters	Unit 1-3a
		Unit 2-1

Variable Ref. No.	Variable Description	Compliance Level
25	Flow in HPI System – Transmitters	3a
26	Flow in LPI System – Transmitters	3a
27	Refueling Water Storage Tank Level and Low Level Alarm – Transmitters	Unit 1-3a
		Unit 2-1
	– Transmitter Range	Unit 1-4c
		Unit 2-1
28	Reactor Coolant Pump Status	1
29	Primary System Safety Relief Valve Positions (including PORV and code valves) or Flow through or Pressure in Relief Valve Lines	1
30	Pressurizer Level – Transmitters	Unit 1-3a
		Unit 2-1
	– Transmitter Range	Unit 1-4c
		Unit 2-1
31	Pressurizer Heater Status (Current) – Heaters	2
32	Quench Tank Level (Pressurizer Relief Tank) – Transmitters Range	4c
33	Quench Tank Temperature Pressurizer Relief Tank) – Transmitters Range	3b
34	Quench Tank Pressure (Pressurizer Relief Tank)	1
35	Steam Generator Level – Transmitters	Unit 1-3a
		Unit 2-1
35A	Steam Generator Level – Narrow Range	Unit 2-1
36	Steam Generator Pressure – Transmitters	Unit 1-3a
		Unit 2-1
37	Safety/Relief Valve Positions or Main Steam Flow – Transmitters	3a
38	Main Feedwater Flow	1
39	Auxiliary Feedwater Flow – Transmitters	Unit 1-3a
		Unit 2-1
40	Condensate Storage Tank Water Level (Auxiliary Feedwater Storage Tank) – Transmitters	1
41	Containment Spray Flow	5
41A	Containment Spray Flow Additive Rate – Transmitters	3a
42	Heat Removal by the Containment Fan Heat Removal System – Transmitters	3a
43	Containment Atmosphere Temperature	4b
44	Containment Sump Water Temperature	5
45	CVCS Makeup Flow-in – Transmitters	3a
46	Letdown Flow – Transmitters	Unit 1-3b
		Unit 2-1
47	Volume Control Tank Level – Transmitters	4a
48	Component Cooling Water Temperature to ESF System – Transmitters	Unit 1-4a
		Unit 2-1

Variable Ref. No.	Variable Description	Compliance Level
49	Component Cooling Water Flow to ESF System – Transmitters	4b
50	High-Level Radioactive Liquid Tank Level – Indication	3b
51	Radioactive Gas Holdup Tank Pressure – Indication	3b
52	Emergency Ventilation Damper Position – Control Room Damper Limit Switches	4a
52A	Emergency Ventilation Damper Position – Auxiliary Bldg. Damper Limit Switches	4a
52B	Emergency Ventilation Damper Position – Fuel Handling Bldg.	4a
53	Status of Standby Power	5
53A	Status of Control Air	5
54	Containment or Purge Effluent	N/A
55	Reactor Shield Building Annulus Effluent	N/A
56	Auxiliary Building Effluent	N/A
57	Condenser Air Removal System Exhaust	N/A
58	Common Plant Vent or Multi-Purpose Vent Discharging any of above releases – Monitors	3a
59	Vent from Steam Generator Safety Relief Valves or Atmospheric Dump Valves – Monitors	5
60A	All other identified Release Points (Decontamination Bldg.) – Monitors	3b
60B	All other identified Release Points (Auxiliary Feed Pump Turbine Exhaust) – Monitors	5
61	All Identified Plant Release Points – Monitors (Particulates and Halogens)	3a
62	Radiation Exposure Meters	5
63	Airborne radiohalogens and particulates (portable sampling with onsite analysis capability)	1
64	Plant and Environs Radiation – Instrument Range	4c
65	Plant and Environs Radioactivity	1
66	Wind Direction	1
67	Wind Speed	1
68	Estimation of Atmospheric Stability	1
69	Primary Coolant (Grab Sample)	5
70	Containment Air (Grab sample)	5
71	Containment Sump (Grab sample)	5
72	Effluent Radioactivity – Noble Gases – Monitors	3a
73	DELETED*	
73a	Main Steam Discharge Valve Monitor (Main Steam Line Radiation)	1

*NOTE This variable is replaced by variable 35a as primary indication of SGTR

Variable Reference No.	Justification
4	Isolation devices are not provided for these variables. However, these variables will be on the safety parameter display system and Class IE multiplexors will have qualified isolation devices.
5	Same as 4
13	There is radiation monitoring on the letdown line; however, during an accident this line is isolated. The back-up or alternate means of measuring this variable is the Sampling System.
14	The Sampling System obviates the need for this variable.
24	Same as 4
27	Same as 4
35	Same as 4
39	Same as 4
40	Same as 4
41	An alternate means of determining the containment spray flow is the spray additive tank flow rate, which is available (refer to Variable Code No. 41a). The spray additive tank flow rate is the flow of liquid which is educted to the suction of the containment spray pumps. The eduction is accomplished by recirculating the containment spray liquid from the discharge to the suction of the containment spray pumps. Indication of the spray additive flow provides confirmation of containment spray pumps operation.
42	Same as 4
44	The containment sump temperature indication is not required in Safety Guide 1, "Net Positive Suction Head for Emergency Core Cooling and Containment Heat Removal System Pumps". PSE&G's Emergency Core Cooling and Containment Heat Removal System pumps, specifically the residual heat removal pumps which take suction from the containment sump when the refueling water storage tank is empty, were designed to meet the criteria in Safety Guide 1.
45	Same as 4
46	Same as 4
47	Same as 4
49	Same as 4
53	1) The vital instrument bus parameters (voltage, frequency, current, watts) are not adjustable by the operator. The vital instrument inverter automatically regulates bus voltage and automatically switches to the backup supply without operator action. 2) Vital Instrument Bus Inverter failure annunciated on the overhead annunciator, Failure of all Channel Indications, and auxiliary alarm typewriter 115 VAC Instrument Bus Loss of Voltage in alarm are entry conditions for Loss of Vital Instrument Bus procedures. These procedures lead the operator through actions required due to the loss of a vital instrument bus to maintain the plant in a safe condition and to maintain compliance with the Technical Specifications. The alarms are expected to be available during accident conditions.

Variable Reference No.	Justification
	3) The inverter output volts, inverter output frequency, line voltage input and line frequency input are monitored locally on every shift. Corrective actions must be taken if abnormalities are noted. The inverters are located in an accessible mild environment area.
53A	1) The PORV accumulators are normally supplied air by the control air header which is monitored by RG 1.97 instruments. In the event the air header containment isolation valves are closed thereby preventing control air from supplying air to the PORVs, the accumulators are designed to supply air for a minimum of 100 close/open cycles. There are no actions the operator can perform with regard to the PORV accumulators air pressure except take corrective actions to restore the control air. The operator is directed to procedures for loss of control air that contains steps necessary to restore control air pressure. 2) The accumulators are provided with low air pressure alarms to indicate that the air supply available to operate the PORVs is low. The alarm response directs the operator to procedures for loss of control air that contains steps necessary to restore control air pressure. The alarms are expected to be available during accident conditions.
59	The steam generator safety relief valves and the atmospheric dump valves are located on the main steam line, upstream of the MSIV. A radiation monitor is installed on the main steam line of each steam generator also upstream of the MSIV. This monitor will therefore give an indication of the level of radiation in the steam from the vents if the steam generator safety relief valves or the atmospheric dump valves should open.
60B	The steam supply to the auxiliary feed pump is taken from the main steam line of No. 11 (21) and No. 13 (23) steam generators, upstream of the MSIVs. A radiation monitor is installed on the main steam line of each steam generator also upstream of the MSIV. If the auxiliary feed pump is in operation, this monitor will therefore give an indication of the level of radiation in the exhaust.
62	This variable was deleted in Revision 3 of Regulatory Guide 1.97.
69, 70, 71	These variables were changed to level 5 as a result of Technical Specification Amendments 254/235, which allows the use of contingency sampling capability in lieu of PASS.
73	DELETED*

*NOTE This variable is replaced by variable 35a as primary indication of SGTR

7.6 All Other Instrumentation Required for Safety

7.6.1 Residual Heat Removal Isolation Valves

There are two motor-operated isolation valves (RH1 and RH2), in series, in the single letdown line connecting the low-pressure Residual Heat Removal (RHR) System to the high-pressure Reactor Coolant System (RCS). Valve RH1 is the upstream valve (closest to the RCS), and RH2 is the downstream valve.

The position indication provided for these valves consists of "open-closed" indication on the main control console.

The open-closed indication for RH1 and RH2 is powered from separate 125-vdc buses. This power is different than the source control power to the valve operators. Using separate power for control and indication ensures that indication will be maintained when control power is locked out.

The control system consists of the following:

1. Valve RH1 is interlocked with a pressure control signal derived from a pressure transmitter to prevent its opening whenever the RCS pressure is greater than the RHR System design pressure.

2. The pressure transmitter used in (1) is connected to the reactor coolant loop which contains the RHR suction line. The pressure transmitter is connected into RHR suction line inside the containment.

3. The control for valves RH1 and RH2 is administratively locked to prevent inadvertent manual opening.

4. A second pressure channel is provided as a pressure control signal to interlock valve RH2 located adjacent to the RHR System. This will be used to prevent its opening whenever the reactor coolant pressure is greater than the RHR system design pressure.

5. This RH2 associated pressure transmitter is connected by a separate connection into the RHR suction line inside the containment. Therefore, the RHR suction line will contain two separate connections, one for each pressure transmitter.

The interlocks are designed to conform to IEEE Standard 279-1971.

Two overhead alarms are provided in the control room for RH1 and RH2:

1. The overhead alarm for RH1 is activated when the RH1 valve is not fully closed in conjunction with high reactor pressure.

2. The overhead alarm for RH2 is activated when the RH2 valve is not fully closed in conjunction with high reactor pressure.

7.6.2 Accumulator Isolation Valves

Position indication and alarm circuits for the motor-operated valves, located between the accumulator tanks and the primary cooling system, are designed to provide assurance that these valves will be open when required. These valves are normally open and under administrative control with the motive power for the valves locked out during normal power operation. Redundant and independent information is provided in the control room to indicate when any one valve is not in the fully open position.

Valve status (fully open or fully closed) is indicated on the main control board via backlighted pushbuttons. These status lights are actuated by limit switches on the valve motor operator. In addition, an alarm is provided on the overhead annunciator system in the event that the valve is not in the fully open position.

Another independent means of determining that the valve is not in its proper position is provided through the auxiliary alarm message indicating when the valve is not in the fully open position. This indication and alarm is derived from a separate valve stem limit switch and is energized from an independent power supply from that used for the overhead annunciator.

A safety injection signal also automatically initiates the opening of these valves.

The valve status and alarm provisions are shown functionally on Figure 7.6-1.

7.6.3 Pressurizer Overpressure Protection System

7.6.3.1 Design Bases

The Pressurizer Overpressure Protection System (POPS) instrumentation measures RCS pressure and temperature. It initiates opening of pressurizer relief valves during pressure transients which could occur when the RCS is below 321°F for Unit 1 and is below 312°F for Unit 2. The equipment used to open the relief valves is designed to essentially the same criteria as that used in the design for the Protection System described in Section 7.2.

Design Criterion: Credit for Operator Action

Criterion: No credit can be taken for operator action until 10 minutes after the operator is aware that a pressure transient is in progress.

The POPS requires no operator action other than to arm the system prior to entry into a water-solid condition during startup, or prior to reaching 321°F for Unit 1 and prior to reaching 312°F for Unit 2 during shutdown from power. All protective action is performed automatically.

Design Criterion: Single Failure Criteria

Criterion: The Pressure Protection System should be designed to protect the vessel given a single failure that initiates the pressure transient. In this area, redundant or diverse Pressure Protection Systems would be considered as meeting the single failure criteria.

The POPS incorporates redundancy and separation of pressure transmitters, logic, and valves in a channelized system. Single failures within the POPS will not defeat the safety function. Single failures which are capable of initiating a pressure transient cannot cause failures in the POPS which would render it unable to provide protection.

Design Criterion: Testability

Criterion: The equipment design should include some provision for testing on a schedule consistent with the frequency that the system is used for pressure protection.

The POPS design provides for testing of the analog circuitry any time the RHR suction valves for the RCS are closed. The relief valves can be tested prior to entry into a water-solid condition by use of the POPS functional test pushbutton. The POPS is designed to function during the relatively infrequent occurrences of potential low temperature pressure transients, therefore periodic testing of the system during power operation is not planned.

Design Criterion: Seismic Design and IEEE Standard 279-1971Criteria

Criterion: Ideally, the pressure protection system should meet both seismic Category I and IEEE Standard 279-1971 criteria. The basic objective, however, is that the system should not be vulnerable to an event which both causes a pressure transient and causes a failure of equipment needed to terminate the transient.

The POPS design meets seismic Category I criteria for all equipment required to open the relief valves. The instrumentation and actuating circuitry meet the applicable requirements of IEEE Standard 279-1971.

7.6.3.2 System Design and Operation

The POPS is a two-train system which uses separate and independent pressure transmitters to open two pressurizer relief valves if RCS pressure exceeds a preset value of 375 psi. This automatic action takes place provided the system has been armed by placing two keylocked pushbuttons in the "ON" position. The system is required to be armed whenever the RCS is below 321°F for Unit 1 and is below 312°F for Unit 2.

Each relief valve is actuated by its own logic output relay, which is energized by a bistable device. The bistable is energized if RCS pressure exceeds the setpoint. Existing pressure sensors are used to develop the signal for valve actuation. These are the same sensors which provide the open permissive interlock function of the RHR System.

The operation of the POPS is governed by two administratively controlled, keylocked pushbuttons which perform three functions. When the RCS temperature is less than 321°F for Unit 1 and is less than 312°F for Unit 2, the system is armed by depressing the "ON" pushbutton for each POPS train. This action opens the motor-operated valves upstream of the relief valves and provides an alarm permissive to indicate that the POPS is armed should temperature increase above 321°F for Unit 1 and above 312°F for Unit 2. In this mode of operation, the relief valve will automatically open if RCS pressure exceeds 375 psi. Actuation of the relief valve is alarmed in the Control Room.

When RCS temperature is above 321°F for Unit 1 and is above 312°F for Unit 2, the "OFF" pushbutton for each POPS train is depressed. This action removes the opening permissive from the relief valve, removes the opening signal from its associated motor-operated valve, and provides an alarm input to indicate that the system is disarmed should RCS temperature fall below 321°F for Unit 1 and fall below 312°F for Unit 2.

When POPS is armed and either relief valve is opened by POPS, it will remain open until the system pressure falls below 375 psi.

A testing provision in the POPS circuitry allows for test opening of the relief valves prior to use of the system below 321°F for Unit 1 and below 312°F for Unit 2. The "TEST" pushbutton, when depressed, will operate the relief valve provided that the associated motor-operated valve is closed. Other portions of the POPS can be tested in a manner similar to other protection system functions. The existing power operated relief valves (PORVs) are utilized for overpressure protection at low temperature in Units 1 and 2.

7.6.3.3 Design Evaluation

The POPS is designed as a "protection grade" system in accordance with the applicable portions of IEEE Standard 289-1971. The use of proven devices provides assurance that the system is compatible with other Protection System equipment. The use of administrative controls to arm the POPS is considered acceptable due to the expected infrequent need for overpressure protection at low temperature.

The POPS relief valves protect the RCS from pressure transients which could exceed the limits of Appendix G to l0CFR50 when one or more RCS cold leg temperature is at or below 321°F for Unit 1 and below 312°F for Unit 2. Either POPS has adequate relieving capacity to protect the RCS from overpressurization as a result of the limiting heat input or mass input cases: (1) the start of an idle Reactor Coolant Pump with the secondary water temperature of the steam generator less than or equal to 50°F above RCS cold leg temperature or (2) the start of an Intermediate Head Safety Injection pump and its injection into a water solid RCS, or the start of a High Head Safety Injection pump in conjunction with a running Positive Displacement charging pump and injection into a water solid RCS. The resultant limiting RCS peak pressure has been calculated to be 455 psig (Reference 1). A number of provisions for prevention of pressure transients below P-7 (when the RCS temperature is below 321°F for Unit 1 and below 312°F for Unit 2) presently exists in the Technical Specifications.

Unit 1 with Model-F steam generators was evaluated for the adequacy of the POPS function. The POPS function was evaluated analytically (Reference 2), specifically for Unit 1 and was found acceptable.

Unit 2 with Model 61/19T (AREVA NP) Steam Generators was evaluated for the adequacy of the POPS function. The POPS function was evaluated analytically (Reference 3), specifically for Unit 2 and was found acceptable.

In order to cause an unwanted relief valve opening at normal operating pressures, an operator would have to erroneously arm the POPS system. This would require bypassing the administrative control of the key associated with the keylocked pushbutton station. Another potential way to initiate a relief would be an unlikely short-circuit of a relay contact in the relief valve control circuit. This latter case, however, is also true of the previous circuitry for the relief valves.

Spurious opening of the relief valve at pressures below normal operations pressure could be caused by an unlikely failure of a pressure transmitter in the "high" direction. Such valve openings would result in a "low pressure" coolant inventory reduction similar to that associated with a "true" signal for relief valve operation. This type of incident could be readily terminated by the operator and poses no threat to the safety of the plant.

The effects of various failures have been considered in the POPS design. These failures included "loss of station power." Failures within the POPS cannot cause a loss of protective function due to the dual train design, and failures capable of causing an overpressurization cannot cause failures within the POPS or prevent operation of the system.

The "loss of air" situation is accounted for by provision of an air accumulator for each relief valve. The accumulators are sized to provide control air for cycling POPS to ensure the RCS pressure transient does not exceed the limit of 10CFR50 Appendix G. The accumulators are designed to seismic Category I requirements. The air accumulators are provided with an alarm for low air pressure. The accumulator design precludes a total loss of control air to the relief valves.

A "loss of station power" will have no effect on the POPS since the protection logic power is provided by inverters, and control power for the relief valves originates at the batteries.

7.6.4 Feedwater Pump Turbine Trips

There are two steam generator feedpumps and turbines. Each has its own trip sensing scheme which actuates a turbine trip for any of the following conditions:

1. Low feedpump suction pressure
2. High turbine exhaust temperature
3. Loss of vacuum at turbine exhaust

4. Excessive thrust bearing wear
5. Low lube oil pressure
6. Low oil reservoir level
7. Over speed trip-electrical sensor and detector
8. Over speed trip-mechanical (internal to turbine)
9. Safety injection or high-high level in any steam generator
10. Manual trip lever at turbine
11. Remote manual trip switch
12. Low HPU Control Oil Pressure

Automatic trip of either feedwater pump turbine will activate a separate audible and visual alarm in the Control Room.

7.6.5 References for Section 7.6

1. S-C-R200-MDM-0042, Rev. 2, RCS Overpressurization for Salem Units 1 & 2
2. FTI Doc. No. 77-1258763-00, Replacement Steam Generator Report and Safety Evaluation for Public Service Electric & Gas Company, Salem Unit One, 1997.
3. PSEG VTD 328324, AREVA NP Document No. 32-5042030-01, “Salem Unit 2 RSG – Low Temperature Overpressure (LTOP) Analysis.”
4. PSEG DCP 80128937, Salem Unit 1 Pressurizer Over-pressure Protection System Setpoint Update

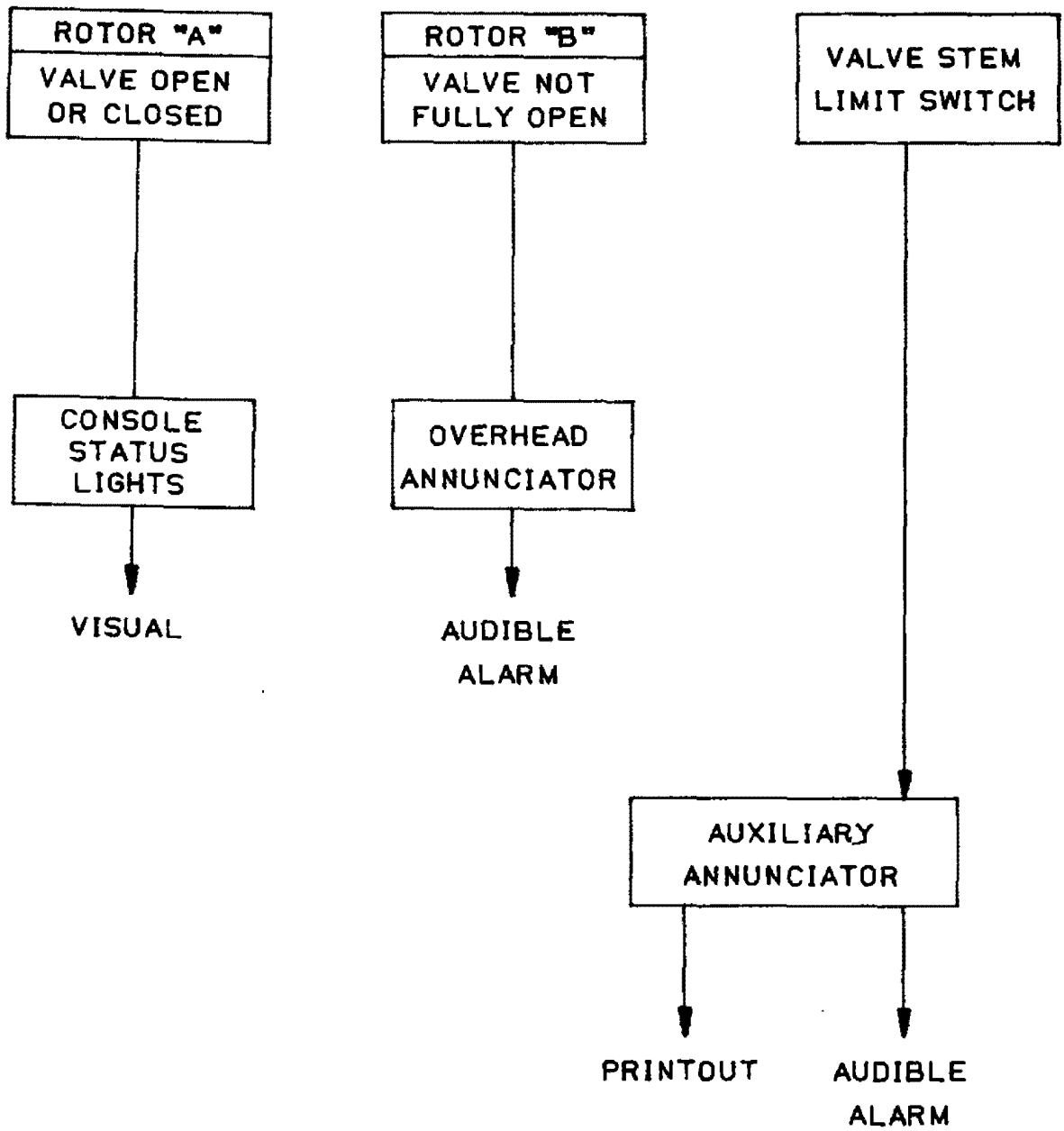

REVISION 6
FEBRUARY 15, 1987

PUBLIC SERVICE ELECTRIC AND GAS COMPANY SALEM NUCLEAR GENERATING STATION	Accumulator Discharge Valves — Status Monitoring
	Updated FSAR — Figure 7.6-1

7.7 Control Systems Not Required for Safety

The Nuclear Steam System's controls for the Salem Generating Station and the D. C. Cook Plant are functionally the same.

7.7.1 Design Basis

7.7.1.1 Reactor Control System

The Reactor Control System is designed to reduce nuclear plant transients for the design load perturbations, so that reactor trips will not occur for these load changes.

Overall, reactivity control is achieved by the combination of chemical shim and Rod Cluster Control Assemblies (RCCA). Long-term regulation of core reactivity is accomplished by adjusting the concentration of boric acid in the reactor coolant. Short-term reactivity control for power changes is accomplished by moving RCCAs.

The function of the Reactor Control System is to provide automatic insertion* of the RCCAs during power operation of the reactor. The system uses input signals including neutron flux, coolant temperature, and turbine load. The Chemical and Volume Control System (CVCS)(Section 9) supplements the Reactor Control System by the addition and removal of varying amounts of boric acid solution.

There is no provision for a direct continuous visual display of primary coolant boron concentration. When the reactor is critical, the best indication of reactivity status in the core is the position of the control group in relation to power and average coolant temperature. There is a direct relationship between control rod position and power, and it is this relationship which establishes the lower insertion limit calculated by the rod insertion limit monitor. There are two alarm setpoints to alert the operator to take corrective action in the event a control group approaches or reaches its lower limit.

Any unexpected change in the position of the control group under automatic control, or a change in coolant temperature under manual control provides a direct and immediate indication of a change in the reactivity status of the reactor. In addition, periodic samples are taken for determination of the coolant boron concentration. The variation in concentration during core life provides a further check on the reactivity status of the reactor including core depletion.

The Reactor Control System is designed to enable the reactor to follow load changes automatically when the output is above approximately 15 percent of nominal power. Control rod positioning may be performed automatically when plant output is above this value, and manually at any time.

Automatic Rod Withdrawal is disabled. Automatic control rod positioning is limited to rod insertion. The operator is able to select any single bank of rods for manual operation. This is accomplished with a multiposition switch so that he may not select more than one bank. He may

* Automatic Rod Withdrawal is disabled

also select automatic or manual reactor control, in which case the control banks can be moved only in their normal sequence with some overlap as one bank reaches its full withdrawal position and the next bank begins to withdraw.

The system enables the nuclear unit to accept a step load increase of 10 percent and a ramp increase of 5 percent per minute within the load range of 15 percent to 100 percent without reactor trip subject to possible xenon limitations. Similar step and ramp load reductions are possible within the range of 100 percent to 15 percent of nominal power. The Steam Dump System permits the plant to accept an additional 40-percent load reduction without reactor or turbine trip.

The Reactor Control System is capable of restoring coolant average temperature to within the programmed temperature deadband, following a scheduled or unexpected change in load. Automatic Rod Withdrawal is disabled. Only automatic rod insertion is available to restore coolant average temperature.

The pressurizer water level is programmed to be a function of the auctioneered coolant average temperature. This is to minimize the requirements on the CVCS and Waste Disposal System (WDS) resulting from coolant density changes during loading and unloading from full power to zero power.

Following a reactor and turbine trip, sensible heat stored in the reactor coolant is removed without actuating the steam generator safety valves by means of controlled steam dump to the condenser and by injection of auxiliary feedwater into the steam generators. Reactor Coolant System (RCS) temperature is reduced to the no load condition. This no load coolant temperature is maintained by steam dump to the condensers which removes residual heat.

7.7.1.2 Operating Control Stations

The Salem Generating Stations have a common Control Room with separate control stations for each unit, as shown on Plant Drawing 204803. The Control Rooms are located in the Auxiliary Building. The information presented in this section pertains to both Control Rooms, although only one is described.

Each unit is equipped with separate Control Stations which contain those controls and instrumentation necessary for operation of that unit under normal and abnormal conditions. The Control Room is continuously occupied by the operating personnel under all operating conditions. Equipment in this area had been designed to minimize the possibility of a condition which could lead to inaccessibility or evacuation.

Control Room shielding and ventilation are designed such that the occupants of the room shall not receive doses in excess of 5 rem to the whole body, or its equivalent to any part of the body, during the course of a Loss-of-Coolant Accident (LOCA). This includes doses received during ingress and egress. The Control Room Air Conditioning System is described in Section 9.

The Control Room is designed to be continuously occupied by qualified operating personnel under all operating and Design Basis Accident (DBA) conditions. Both Control Rooms share a

number of separate Communication Systems. One system consists of direct dialing telephones. Another independent Communication System is a party line and voice paging system which provides the primary means of communication between plant operations personnel throughout the station. Battery-operated portable two-way transceivers are provided for special purposes. There is a separate system interconnecting the Containment Building, Control Room and refueling area. These systems are energized from inverter powered buses.

The capability to bring the reactor to a hot shutdown condition is provided at locations outside the Control Room. The majority of equipment for this condition is located in the auxiliary feedwater pump area.

7.7.2 System Design

Two independent Control Systems of different principles provide redundancy of reactivity control. One of the two Reactivity Control Systems employs RCCAs to regulate the position of the neutron absorbers within the reactor core. The other Reactivity Control System employs the CVCS to regulate the concentration of boric acid solution neutron absorber in the RCS. These systems are described in Sections 3 and 9, respectively.

The Reactor Control System is designed to provide stable system control over the full range of automatic operation throughout core life without requiring operator adjustment of setpoints other than normal calibration.

A simplified block diagram of the Reactor Control System is shown on Figure 7.7 1. The Reactor Control System controls the reactor coolant average temperature by regulation of control rod bank position. The system is capable of restoring reactor coolant average temperature to the programmed value following a change in load. The programmed coolant average temperature increases linearly from zero power to the full power condition.

The Reactor Control System will also initially compensate for reactivity changes caused by fuel depletion and/or xenon transients. Long-term compensation for these two effects is periodically made by adjustment of the boron concentration to return the control rod bank to its normal operating range.

The reactor coolant loop average temperatures are determined from hot leg and cold leg measurements in each reactor coolant loop. The error between the programmed average temperature and the highest of the measured average temperatures from each of the reactor coolant loops constitutes the primary control signal as shown on Figure 7.7-1. An additional control input signal is derived from the reactor power vs. turbine load mismatch signal. This additional control input signal improves system performance by enhancing response and reducing transients peaks. From these input signals, the rod direction command signals are derived. The rod speed command signal varies over the corresponding range of 3.75 to 45 inches per minute depending on the magnitude and the rate of change of the input signals. The rod direction command signal is determined by the positive or negative value of the temperature difference signal. The rod speed and rod direction command signals are fed to the Rod Control System.

7.7.2.1 Rod Cluster Control Assembly Arrangements

There are 53 RCCAs divided into four shutdown banks of 24 RCCAs and four control banks of 29 RCCAs. The control banks are the only rods that can be manipulated under automatic control. Automatic Rod Withdrawal is disabled. Only Automatic Rod Insertion is available. The control rods are divided into groups to obtain smaller incremental reactivity changes per step. All RCCAs in a group are electrically paralleled to move simultaneously. There is individual position indication for each RCCA.

7.7.2.2 Rod Control

For a complete description of rod control and position indication systems, see References 1, 2 and 3.

7.7.2.2.1 Control Bank Rod Insertion Monitor

The purpose of the control bank rod insertion monitor is to give warning to the operator of a decrease in shutdown margin. Since the amount of shutdown reactivity required for the design shutdown margin following a reactor trip increases with increasing power, the allowable rod insertion limits must be decreased with increasing power. One parameter which is proportional to power is used an input to the insertion monitor. This is the ΔT between the hot leg and the cold leg, which is a direct function of reactor power. The rod insertion monitor uses this parameter for each control rod bank as follows:

$$Z_{LL} = A(\Delta T)_{auct}$$

where:

Z_{LL}	=	maximum permissible insertion limit for affected control bank
$(\Delta T)_{auct}$	=	highest ΔT for all four loops
A, C	=	constants chosen to maintain $Z_{LL} \geq$ actual limit based on physics calculations

The actual control rod bank position (Z) is compared to Z_{LL} as follows:

If $Z - Z_{LL} \leq D$, a low alarm is actuated

If $Z - ZLL \leq E$, a low-low alarm is actuated

Since the highest value of ΔT is chosen by the auctioneering unit, a conservatively high representation of power is used in the insertion limit calculation.

Actuation of the low alarm alerts the operator of an approach to a reduced shutdown reactivity situation. Administrative procedures require the operator to add boron following normal procedures with the CVCS. Actuation of the low-low alarm requires the operator to either follow the actions of the Technical Specifications or initiate emergency boration procedures. The value

for "E" is chosen to account for all instrumentation errors so that the low-low alarm would normally be actuated before the insertion limit is reached. The value for "D" is chosen to allow the operator to follow normal boration procedures. Figure 7.7-2 shows a schematic representation of the control rod insertion monitor. In addition to the rod insertion monitor for the control banks, an Alarm System is provided to warn the operator if any shutdown RCC leaves the fully withdrawn position.

7.7.2.2.2 Rod Deviation Alarm

The demand and actual rod position signals are displayed on the control console. They are also monitored by the plant computer which provides a visual printout and an audible alarm whenever an individual rod position signal deviates from the bank demand signal by a preset limit. Figure 7.7-3 is a block diagram of the rod deviation comparator and alarm system. The design criterion for this system is that the alarm be actuated before rod deviation, which would allow the core design hot channel factors to be exceeded, with appropriate allowance for instrument error.

7.7.2.3 Plant Control System Interlocks

7.7.2.3.1 Rod Stops

Rod stops are provided to prevent abnormal power conditions which could result from excessive control rod withdrawal initiated by either a Control System malfunction or operator violation of administrative procedures.

Rod stops are listed in Table 7.7-1.

7.7.2.3.2 Automatic Turbine Load Runback

Automatic turbine load runback is initiated by an approach to an overpower or overtemperature condition. This will prevent high power operation which might lead to an overpower or an overtemperature ΔT trip.

Turbine load reference reduction is initiated by either an overtemperature or overpower ΔT signal in two of four loops.

7.7.2.4 Pressurizer Pressure Control

The RCS pressure is maintained at constant value by using either the heaters (in the water region) or the spray (in the steam region of the pressurizer). The electrical immersion heaters are located near the bottom of the pressurizer. A portion of the heater groups are proportional heaters which are used to control small pressure variations. These variations are due to heat losses, including heat losses due to a small continuous spray. The remaining (backup) heaters are turned on when the pressurizer pressure controller signal is below a given value.

The spray nozzles are located on the top of the pressurizer. Spray is initiated when the pressure controller signal is above a given setpoint. The spray rate increases proportionally with

increasing pressure until it reaches a maximum value. Steam condensed by the spray reduces the pressurizer pressure. A small continuous spray is normally maintained to reduce thermal stresses and thermal shock and to help maintain uniform water chemistry and temperature in the pressurizer.

Two power relief valves limit system pressure for large load reduction transients.

Spring-loaded safety valves limit system pressure should a complete loss of load occur without direct reactor trip or turbine bypass.

7.7.2.5 Pressurizer Level Control

The water inventory in the RCS is maintained by the CVCS. The positive displacement pump normally performs the charging function. The pressurizer level is controlled by the charging flow controller which controls the positive displacement pump speed to produce the flow demanded by the pressurizer level controller. When a high head safety injection pump is performing the charging function, the pressurizer level is controlled by the charging-flow controller that modulates flow control valve CV55, located in the discharge piping downstream from the charging pumps. A flow transmitter (FT128) in the discharge header provides actual flow indication to the control board bezel and to flow control valve CV55. The output of desired flow from the pressurizer level controller is compared to the actual flow from FT128 and flow control valve CV55 is positioned so that they match. The pressurizer water level is programmed as a function of coolant average temperature. The pressurizer water level decreases as the load is reduced from full load. This is the result of coolant contraction following programmed coolant temperature reduction from full power to low power. The programmed level is designed to match as nearly as possible the level changes resulting from the coolant temperature changes. To permit manual control of pressurizer level during startup and shutdown operations, the charging flow can be manually regulated from the main control room.

7.7.2.6 Steam Generator Water Level Control

The steam generator water level is controlled by a digital microprocessor controlled steam generator feedwater control system termed the advanced digital feedwater control system (ADFCS). The ADFCS provides automatic control of the programmed level in the steam generators without the need for operator intervention over the range of power operation. This range of operation extends from the point at which the transition is made from feeding via the auxiliary feedwater system to feeding via the main feedwater system on the bypass control valve (approximately 2-3% power) up to full power. One control system operates on both the main and bypass feedwater control valves without the need for manual action to switch operating modes or switch between valves.

The basic control system functional design is similar to the original analog feedwater control system; however, a number of features have been added to improve the performance of the system. Functional block diagrams of the system are shown in Figures 7.7-7, 7.7-8, and 7.7-9. A feedwater temperature-dependent gain has been added to the narrow-range level regulator as shown in Figures 7.7-7 and 7.7-8. The response of steam generator water level to changes in feedwater flow is a function of feedwater temperature. At low feedwater temperatures and low

power levels the level response exhibits more of the classical shrink/swell effect. This non-minimum-phase response is a destabilizing influence on the feedback control system. Therefore the control system lowers the gain at low feedwater temperature to preserve stability and increases the gain at high feedwater temperature to improve the response of the system.

The flow regulator has a high-power mode and a low-power mode which is shown in Figure 7.7-8. This is necessary because the feedwater flow and steam flow signals are not usable at low power levels. The switching between these two modes is done automatically within the system and is performed in a bumpless manner without the need for operator action. To compensate for the lack of steam flow signals at low power, a feedforward signal, which is based on wide range steam generator water level deviation from its zero power value, is utilized. This difference generates a reference feedwater flow demand that is proportional to changes in steam flow. Wide range level is used for this purpose since wide range level responds quickly and in proportion to changes in total steam flow.

In high power mode, feedwater flow is regulated in response to the deviation between steam flow and feedwater flow, and the compensated steam generator water level deviation from setpoint. A steam flow/feed flow rate lag compensation is included in the algorithm to respond quickly to rapid changes in the steam flow/feed flow mismatch. During steady-state conditions (when the steam flow mismatch is constant), this rate lag compensation does not contribute to the response. Additionally, the proportional and integral gains for the level control PID are scheduled based on the steam flow. As was the case with the low-power mode load index, the feed flow and steam flow signals will automatically be switched in and out of the system. This mode switching is performed independently of which valve (main or bypass) is being used for control.

An additional unique feature of the control system design is the valve lift calculator or the "linearization circuit." The block diagram of this part of the system is shown in Figure 7.7-9. The output of the flow regulator is a demanded feedwater flow. The relationship between changes in valve position and changes in feedwater flow is highly nonlinear. It depends on the valve flow characteristic, pressure drop across the system, and system hydraulic characteristics. The linearization circuit calculates the amount that the control valve(s) must be moved to accomplish the change in flow demanded by the control system. The valve lift calculator operates on both the main and bypass control valves and is independent of the control mode. The bypass and main control valves are stroked open sequentially with some overlap. Either of the valves may be operated in manual while leaving the other valve in auto as shown in Figure 7.7-9. The valves are closely coupled through the algorithms in the valve demand portion of the system in order to minimize disturbances on the process (flow and level).

As the plant is taken from low power to high power, the bypass and main control valves are opened sequentially. Before the bypass valve reaches its nominal full-open condition, the control system begins to open the main valve from its full-closed position. As the plant increases in power, the feedwater flow demand increases and the main and bypass valves operate in a "split-range" fashion with both valves continuing to open as controlled by the system's valve sequencing logic. As flow demand is increased the main and bypass valves continue to open until a predetermined steam flow setpoint is reached, at which point the bypass valve closes at a constant rate versus time. The main valve opens to compensate for the closing bypass valve.

As flow demand decreases, the main valve closes until a predetermined steam flow setpoint is reached, at which point the bypass valve opens at a constant rate versus time. The main valve closes to compensate for the opening bypass valve. The main and bypass valves then operate in a “split-range” fashion until the main valve closes completely. The normal sequence described above can be altered by placing either or both of the valves in manual control.

The feedwater control system includes signal validation for input signals to reduce the probability of a failed sensor causing an upset condition in the plant. The input channel signal validation configuration is shown in Figure 7.7-7. When three channels of a variable are available, the median signal select method is used. In this method, the middle value of the three input values is used as the input to the control algorithms. This will prevent high or low failures of a single input from affecting the control system. When two input channels of a variable are available, an arbitration method is used. In this method, the two inputs are compared, and if they agree to within a certain criterion, they are averaged and the result is sent to the control algorithms. If the two channels disagree significantly, they are compared to an estimate of the variable, which is calculated using other process measurements. The primary input that is closest to the estimate is used in the control system.

The signal validation feature of the feedwater control system allowed elimination of the low feedwater flow reactor trip that was incorporated into the original design of the plant. WCAP-13502 provides justification for elimination of the trip (Reference 1).

A summary of the signals input to the advanced digital feedwater control system is as follows:

Process Variable	Number of Channels
Narrow-range steam generator water level	12, 3/loop
Wide-Range steam generator water level	4, 1/loop
Steam flow	12, 3/loop
Feedwater flow	12, 3/loop
Feedwater temperature	4, 1/loop
Steam generator pressure	4, 1/loop
Turbine steamline inlet pressure	3
Feedwater header pressure	3
Valve position	8, 1/valve

Continued delivery of feedwater to the steam generators is required as a sink for the heat stored and generated in the reactor coolant following a reactor trip and turbine trip. An override signal closes the feedwater valves when the average coolant temperature is below a given temperature.

Following a turbine trip, the feedwater regulating valves are closed at approximately a uniform rate, decreasing flow to a low percent of full flow at about one minute after the trip. This provides an optimum heat sink. Subsequently, the operator remotely controls the valves to maintain

steam generator water level. Manual override of the Feedwater Control System is available at all times.

7.7.2.7 Steam Dump Control

The Steam Dump System is designed to relieve steam from the steam generators to the condenser to reduce the sensible heat in the primary system in the event of load reduction not exceeding 50 percent.

The bypass system can accommodate 40 percent of full load flow, which, in conjunction with the 10-percent load follow capability of the Reactor Control System, enables the Nuclear Steam Supply System to accept a 50-percent load rejection from full load without reactor trip. All steam dump steam flows to the main condenser via the bypass lines.

When a load rejection occurs, if the difference between the required temperature setpoint of the RCS and the actual average temperature exceeds a predetermined amount, a signal will actuate the load rejection steam dump controller.

This circuit prevents a large increase in reactor coolant temperature following a large, sudden load decrease. The error signal is a difference between the lead/lag compensate auctioneered T_{avg} and the reference T_{avg} and is based on turbine steamline inlet pressure.

The T_{avg} signal is the same as that used in the RCS. The lead/lag compensation for the T_{avg} signal is to compensate for lags in the plant thermal response and in valve positioning. Following a sudden load decrease, T_{ref} is immediately decreased and T_{avg} tends to increase, thus generating an immediate demand signal for steam dump. Since control rods are available in this situation, steam dump terminates as the error comes within the maneuvering capability of the control rods.

The steam dump flow reduces proportionally as the control rods act to reduce the average coolant temperature. The artificial load is therefore removed as the coolant average temperature is restored to its programmed equilibrium value.

The purpose of the Steam Dump System is to reduce RCS transients following a substantial turbine load reduction by bypassing main steam directly to the condenser, thereby maintaining an artificial load on the steam generators. The Control Rod System can then reduce the reactor temperature to a new equilibrium value without causing overtemperature and/or overpressure conditions.

The dump valves are modulated by the reactor coolant average temperature signal. The required number of steam dump valves can be tripped quickly to stroke full open or modulate, depending upon the magnitude of the temperature error signal resulting from loss of load.

Following a reactor and turbine trip, decay heat and sensible heat stored in the reactor coolant are removed without actuating the steam generator safety valves by means of controlled steam dump to the condenser and by injection of feedwater to the steam generators.

Following a turbine trip, as monitored by the turbine trip signal, the load rejection steam dump controller is defeated and the turbine trip steam dump controller becomes active. Since control rods are not available in this situation, the demand signal is the error signal between the lead/lag compensated auctioneered T_{avg} and the no load reference T_{avg}. When the error signal exceeds a predetermined setpoint, the dump valves are tripped open in a prescribed sequence. As the error signal reduces in magnitude indicating that the RCS T_{avg} is being reduced toward the reference no load value, the dump valves are modulated by the plant trip controller to regulate the rate of removal of decay heat and thus gradually establish the equilibrium hot shutdown condition.

The error signal determines whether a group of valves is to be tripped open or modulated open. In either case, they are modulated when the error is below the trip-open setpoints.

7.7.2.8 <u>In-core Instrumentation</u>

The in-core instrumentation is designed to yield information on the neutron flux distribution and fuel assembly outlet temperatures at selected core locations. Using the information thus obtained, it is possible to confirm the reactor core design parameters.

The functionality requirements for the in-core instrumentation are contained in the Salem Technical Requirements Manual.

7.7.2.9 <u>Operating Control Stations</u>

The Control Room provides the necessary controls and indication to start, operate and shut down the unit with sufficient redundant information displays and alarm indications to ensure safe and reliable operation under all normal and abnormal conditions.

The most important unit controls are located on the control console, which is of freestanding, horseshoe shaped design, constructed of steel. The front horizontal portion contains the most frequently used operating controls while the rear vertical portion contains less frequently used controls and indicators.

Controls and indicators are functionally grouped on a system basis to facilitate safe, reliable operation of the unit during transients as well as normal operation. Those systems requiring more frequent operator attention are located in the central area, while less frequently used controls are located on either side.

Most of the console instruments consist of plug-in, back-lighted pushbutton stations and vertical scale indicators. Operator action consists of a momentary push of a button. The lights in the buttons are used for status, information and alarm indication.

Alarms are provided in the Control Room to alert the operator of abnormal plant conditions. The alarm displays are located either on a console pushbutton control station, where corrective action would be taken, or on the overhead annunciator. An alarm signal causes a back-lighted pushbutton to flash and the console audible alarm to sound until acknowledged by the operator. Upon clearing of an alarm condition, the console audible ringback is sounded. Other alarms are

displayed on an annunciator panel located overhead above the console. This panel consists of illuminated windows and separate audible alarm and ringback tones. Two first-out annunciator panels indicate, by means of red and white lights, the first reactor or turbine trip to occur. A comprehensive status panel, employing the same type of illuminated windows as the console, indicates the condition of trip channels and alarms. By means of a "mimic bus" arrangement, the interaction of trip conditions and permissives can be quickly analyzed. Diesel generator automatic load sequencing, critical valve status and other important information are also clearly displayed.

A computer is employed to assist the operator and to monitor the unit. Selected parameter trends can be recorded while alarm conditions are indicated to the operator. The computer output consists of a video display mounted on the console, logging printer mounted on Control room panels located convenient to the plant operators. The video display and printers are independent devices.

Vertical panels form the walls of the Control Room and contain controls for systems, which require only occasional operator attention as well as miscellaneous recorders and indicators.

Reliability and ease of service has been designed into the Control Room. The majority of the console instruments are plug-in modules. In the unlikely case that a pushbutton station or indicator on the console malfunctions, it can be readily removed and replaced from the front of the console. No access to the inside of the console is needed. Re-lamping can also be quickly accomplished from the front of the pushbutton.

All pushbutton stations, the fire protection display panel, the overhead annunciator and the status panel contain at least two lamps at each point for increased reliability. Low voltage (28 V dc) control is utilized for the console pushbutton stations. A Relay Logic System performs the required switching and memory functions and provides the interface between the 28 V dc and the control voltage (125 V dc or 115 V ac) for the equipment.

The Relay Room and Control Equipment Room contain equipment used for signal conditioning, circuit switching and logic operations. The wiring between the console and equipment cabinets in these rooms makes use of plug-in cables, which reduces the exposure of terminations. Normal servicing of devices in the console requires no access to the inside of the console.

For ease of servicing and maintenance, much of the equipment in the Relay Room and Control Equipment Room is designed for plug-in module type construction. Relays are heavy-duty plug-in units. All components are carefully chosen and conservatively rated. The Control Room, Relay Room, Control Equipment Room and Computer Room are air conditioned to maintain a clean, temperature-controlled environment.

Reliable sources of control power, as described in Section 8, are provided to ensure continual operation of controls and instrumentation. Emergency lighting is provided in the Control Room, Control Equipment Room and Relay Room as well as other parts of the station.

7.7.2.10 Plant Alarm and Annunciator Systems

The Alarm and Annunciator Systems for this plant consist of three major areas of alarm indication. They are:

1. The Overhead Annunciator System
2. The Auxiliary Alarm System (sequential data operations record)
3. The Control Console Alarm System

These systems serve to indicate and/or record all abnormal or alarm conditions to be brought to the operator's immediate attention inside the Control Room.

Each system is discussed below independently; however, mention is made when there is redundancy of alarm indication.

The Overhead Annunciator System

This system is comprised of seven cabinets containing all the power supplies, relays, terminals, hardware and logic to actuate ten groups of forty-eight 2-inch x 3-inch backlighted windows for a system total capacity of 480 alarms. The ten displays are located in a dropped ceiling fascia above the control console for easy viewing by the control operator. An annunciator CRT display is located on the control console to identify alarm points. The various plant alarms are grouped into systems or related areas and situated above the console section containing the associated system control pushbuttons and indicators.

The ten displays of the Overhead Annunciator System do not represent ten specific alarm groupings but ten 48-point alarm window displays. Each 48-point display contains various plant alarms; however, alarms which are common to a system or of a related nature are grouped together within a display. There may be several such groupings on a display; see Table 7.7-2.

Most of the assigned inputs to the Auxiliary Alarm System contain status information for safety-related equipment. This information can be considered a backup to the other annunciator systems provided.

Since Indication and Alarm Systems are not part of the Plant Protection System, and failures within these systems cannot affect the operation of the Protection System, there is no reason to impose limiting conditions for operation on the Alarm Systems. Alarm Systems cannot be considered as part of a safety-related system, since they perform no function in the actuation of safety-related equipment. Limiting conditions for operation are imposed on the Plant Protection Systems and equipment to assure the safe operation of the unit.

One display serves as first-out indication and is divided into two separate and independent systems. These are "Reactor Trip First-Out", and "Turbine Trip First-Out." The "Reactor Trip First-Out" group has been divided into "Reactor Trip" and "Safety Injection" groups for identification purposes.

There are separate and independent push buttons located on the control console which the operator uses to silence, acknowledge, and reset the overhead alarms. A key operated switch is located on the main console to reset the "First-Out" indications.

The Overhead Annunciator System is a high speed distributed data acquisition and display system. Non-redundant input scanners collect alarm contact state data for redundant Sequential Events Recorders (SER). The SER's provide alarm data to redundant distributed logic channels, the output of which is diode auctioneered to drive the window boxes.

All field inputs are optically coupled to scanner electronics that can read 64 inputs per scanner. When an input change of state is detected, the point address, real time, and alarm state are stored in a buffer in the scanner. The scanner is polled by the SER and transfers alarm status to the SER. The SER stores this event data in chronological order in a circular historical buffer. Normal configuration causes each alarm point to be displayed on the system console CRT, the appropriate window box, printed on the hard copy printer, and placed in the historical buffer in the local PC. If the primary controller fails due to a processor lockup (processor halts) or Port 4 failure, the primary watchdog timer circuit will switch to the backup controller.

A local PC runs the Remote Configuration Workstation (RCW) software. The RCW allows the SER to be queried for various reports and to check for errors in the system. Password entry and RCW/SER switch selection provides access for reprogramming alarms.

Periodic internal self tests are run by the SER. One test places all inputs at the scanner level in an alarm state and verifies that all inputs are passed to the SER. The SER then removes all the inputs from the alarm state and verifies that all inputs returned to their prior state. Any point not responding correctly will be printed as a faulty point. This test can also be initiated manually via the Functional Test switch located on the operator panel in annunciator cabinet 115(F). Operation of this test function does not affect the normal operation of the system.

An independent Annunciator Verification System continuously tests Overhead Annunciator System alarm processing by inputting simulated alarm stimuli through two of the scanners. These signals are then processed through the Sequential Events Recorder, and sent through the redundant chains of distributed logic controllers. Depending on the response of the two distributed logic controller trains to the stimulus, the Annunciator Verification System determines whether the annunciator system is functioning. If failures are detected, the Annunciator Verification System inputs an annunciator system trouble alarm to the Overhead Annunciator System and to an independent indicator lamp/console group alarm. The Annunciator Verification System also provides a separate trouble alarm for loss of power or self-diagnostics faults.

The system is powered by two separate 115 VAC, 60Hz supplies. Loss of either of the 115 VAC power supplies will initiate a loss of power alarm on the OHA, the plant process computer, and on a console indicator lamp/console group alarm independent of the OHA system on the control console. Redundant power supplies are provided for

the field contact power, the scanners, the SER, and the distributed logic channels (including the associated window box lamps). The output of each power supply is also monitored to alarm on loss of potential in the same manner as the 115 VAC supplies.

The remotely located annunciator logic cabinets are connected by plug-in cables to the overhead display units. A test switch is also provided on the control console to test the window box lamps for operability. Operation of the test function does not affect the normal operation of the system.

System input ground detection is provided. A ground detected on an input will alarm on the OHA and on the plant process computer. The system also has a logic failure output which provides an input to the OHA and to an indicator lamp/console group alarm independent of the OHA system on the control console when certain hardware failures or communications errors occur.

The Auxiliary Alarm System (Auxiliary Annunciator System)

Each Salem Unit has an independent Auxiliary Annunciator System (AAS). The AAS is a sequential data operations recorder system used primarily for alarming and recording the loss of control circuits' potential and the off-normal position of valves. Each system consists of four (4) remote panels (133, 134, 33 and 34) containing all the input terminals, input logic, sequential memory, software, relays, power supplies, local/backup printer, system controls, and associated hardware to output sequential alarm conditions to a main printer in the Control Room. The Unit 1 AAS monitors Unit 1 parameters and provides alarm data at the Unit 1 Control Room. The Unit 2 AAS monitors Unit 2 parameters and provides corresponding alarm data to the Unit 2 Control Room.

Each Unit's system has over 700 active inputs. Each input is adequately isolated from the field at the point of the system. The system applies a field contact wetting voltage to the field circuits/alarm points and monitors the field contacts for a change in state to initiate/clear an alarm. On a contact change of state, the "contact state" and legend is printed on the main printer with an Overhead alarm "Annunciator System Printer printing."

Each system is powered two 120 VAC power sources. The AAS system can be configured to monitor normally open (NO) and/or normally closed (NC) contact conditions. The system configuration is protected by password to ensure control of database programs. The AAS monitors its system performance and provide notification of internal failures (system faults or system alerts), indicating a deficiency in system operations.

The AAS provides outputs to the Unit 1/Unit 2 Overhead Annunciator (OHA) monitoring system performance. Operator controls (pushbuttons, etc.) for system operation are provided in control room panel 1RP9 (2RP9) and AAS panel 133-1 (134-2).

Control Console Alarm System

To facilitate operation of the plant, certain alarms are located on pushbutton control stations on the control console. These alarms are located to facilitate immediate corrective action and are actuated by either the Process Control Systems or the plant motor controls.

An alarm signal causes a back-lighted pushbutton to flash and the console audible alarm to sound until acknowledged by the operator.

Acknowledgement of an alarm condition causes the audible signals to be silenced and the alarm pushbutton to remain lit. When the alarm condition is cleared, the console audible ring-back signal sounds and the back-lighted pushbutton flashes again. Acknowledgement silences the audible signal and turns off the back-lighted pushbutton.

To facilitate the location of any pushbutton in alarm, the control console is divided into six sections, referred to as Console Alarm Groups. Each group or console section has a bull's eye indication light at the top to direct the operator's attention to that specific section of the control console containing the pushbutton in alarm. One cabinet contains the electronics, power supplies and ground detection circuitry for the Console Group Alarm system. The Console Group Alarm system has six outputs to actuate each individual alarm group indicating light and four outputs to sound the alarm and ringback horns. Alarm horns sound a two step warble until silenced or acknowledge. Ringback horns sound a steady tone for two seconds if not silenced by the Operator.

The Process Control Systems provide alarms via four separate and independent alarm interface cabinets, one per process control group, each containing all the necessary input terminals, alarm logic, power supplies, and hardware to actuate the associated console alarms. The alarm cabinets are connected to the pushbutton stations via plug-in cables.

Each alarm cabinet is powered by two 115 V ac, 60 Hz feeds, which feed redundant dc power supplies. The outputs of both power supplies are diode auctioneered to a common bus. Each ac feed and dc potential is monitored and will actuate an alarm on the auxiliary annunciator system upon loss of voltage.

The alarm logic is entirely solid-state designed for increased reliability. Each alarm point can be actuated from either a normally closed initiating contact or by the application or removal of 115 V ac or 125 V dc. A contact change of state or change in voltage level indicates an alarm condition until it returns to its normal state. Alarm contacts are monitored by internally supplied 125 V dc.

The plant Motor Control Systems provide for numerous alarms from various plant systems. These alarms are initiated by field contacts which are monitored by the internal relay logic of the system to actuate the associated pushbutton alarm. These alarms are either of the ring-back type as previously described or of the non-ring-back type.

This system is supplied from 115 V ac, 125 V dc and 28 V dc sources. There are no internal power supplies. Each 28 V dc control circuit is protected by the use of independent breakers.

7.7.2.11 Residual Heat Removal Performance Monitoring System

The residual heat removal performance monitoring system provides an early warning of loss of decay heat removal capabilities. The system includes:

1. Two independent narrow range continuous Reactor Coolant System level indications and wide range RCS level indication whenever the RCS is in a reduced inventory (mode 5 or 6). The narrow level range monitored is from Elevation 97' to Elevation 91.1'. The wide range level is monitored from elevation 97 feet to 109.5 feet. The wide range midloop level is used while reactor vessel level is above the narrow range midloop level indication.

2. Other monitoring capability:

    a. RHR pump discharge flow

    b. RHR pump discharge pressure

    c. RHR pump suction pressure

    d. RHR pump motor current

    The system is shown on the RCS and RHR system drawings (Plant Drawings 205301 and 205332).

The system is designed to accurately monitor water level while the RHR system is operating with the RCS drained to the mid level of the RPV nozzles. This level allows draining of the steam generators but establishes a very narrow operating level over which the RHR pumps will have adequate NPSH. The Reactor Vessel Level Indicating System (Plant Drawing 205332) provides a wide range level indication but is not accurate enough for the purposes described in NRC Generic Letter 88-17.

The testing design criteria are the same as used for instruments that are connected to full reactor temperature and pressure. The channel design and physical location of the transmitters prevent any physical damage from a refueling seal failure even though the system is not specifically designed to function while flooded or over this range. The low side of the level transmitter is connected to the pressurizer and can be manually aligned to measure the static water level in the vessel with or without pressure in the vessel.

The system is not required for safe shutdown, and is used only during cold shutdown, therefore, it is not safety related. However, it is designed, installed, and maintained as if it were safety related.

7.7.2.12 Seismic Monitoring Instrumentation

The operability of the seismic monitoring instrumentation ensures that sufficient capability is available to promptly determine the magnitude of a seismic event and evaluate the response of

those features important to safety. This capability is required to permit comparison of the measured response to that used in the design basis for the facility. The functionality requirements for the seismic monitoring instrumentation are contained in the Salem Technical Requirements Manual.

7.7.2.13 Meteorological Monitoring Instrumentation

The meteorological instrumentation ensures that sufficient meteorological data is available for estimating potential radiation doses to the public as a result of routine or accidental release of radioactive materials to the atmosphere. This capability is required to evaluate the need for initiating protective measures to protect the health and safety of the public. The functionality requirements of the meteorological monitoring instrumentation are contained in the Salem Technical Requirements Manual.

7.7.3 System Design Evaluation

7.7.3.1 Unit Stability

The Rod Control System is designed to limit the amplitude and the frequency of continuous oscillation of coolant average temperature about the Control System setpoint within acceptable values. Continuous oscillation can be induced by the introduction of a feedback control loop with an effective loop gain which is either too large or too small with respect to the process transient response, i.e., instability induced by the control system itself. Because stability is more difficult to maintain at low power under automatic control, no provision is made to provide automatic control below 15 percent of full power.

The Control System is designed to operate as a stable system over the full range of automatic control throughout core life.

7.7.3.2 Step Load Changes Without Steam Dump

A typical power control requirement is to restore equilibrium conditions, without a trip, following a plus or minus 10 percent step change in load demand, over the 15 to 100 percent power range for automatic control. The design must necessarily be based on conservative conditions and a greater transient capability is expected for actual operating conditions. A load demand greater than full power is prohibited by the turbine control load limit devices.

The function of the Control System is to minimize the reactor coolant average temperature deviation during the transient within a given value and to restore average temperature to the programmed setpoint within a given time. Excessive pressurizer pressure variations are prevented by using spray and heaters in the pressurizer.

The margin between overtemperature ΔT setpoint and the measured ΔT is of primary concern for the step load changes. This margin is influenced by nuclear flux, pressurizer pressure, reactor coolant temperature, and temperature rise across the core.

7.7.3.3 Loading and Unloading

Ramp loading and unloading of 5 percent per minute can be accepted over the 15 to 100 percent power range under automatic control without tripping the plant. The function of the Control System is to maintain the coolant average temperature and pressure as functions of turbine generator load. The minimum control rod speed provides a sufficient reactivity insertion rate to compensate for the reactivity changes resulting from the moderator and fuel temperature changes.

The coolant average temperature increases during loading and causes a continuous insurge to the pressurizer as a result of coolant expansion. The sprays limit the resulting pressure increase. Conversely, as the coolant average temperature is decreasing during unloading, there is a continuous outsurge from the pressurizer resulting from coolant contraction. The heaters limit the resulting system pressure decrease. The pressurizer level is programmed such that the water level is above the setpoint at which the heaters cut out during the loading and unloading transients. The primary concern during loading is to limit the overshoot in average coolant temperature and to provide sufficient margin in the overtemperature ΔT setpoint.

The automatic load controls are designed to safely adjust the unit generation to match load requirements within the limits of the unit capability and licensed rating.

7.7.3.4 Loss of Load with Steam Dump

The Reactor Control System is designed to accept load reduction not exceeding 50 percent for which no reactor trip or turbine trip should be actuated.

The Automatic Steam Dump System is able to accommodate this abnormal load rejection and to reduce the effects of the transient imposed upon the RCS. The reactor power is reduced at a rate consistent with the capability of the Rod Control System. Reduction of the reactor power is automatic down to 15 percent of full power. The steam dump flow reduction is as fast as RCCAs are capable of inserting negative reactivity.

The pressurizer power operated relief valves might be actuated for the most adverse conditions, e.g., the most negative Doppler coefficient, and the minimum incremental rod worth. The relief capacity of the power operated relief valves is sized large enough to limit the system pressure to prevent actuation of high pressure reactor trip for the above conditions.

7.7.3.5 Turbine Generator Trip with Reactor Trip

Whenever the turbine generator unit trips at an operating level above 50-percent power, the reactor also trips. The unit is operated with a programmed average temperature as a function of load, with the full load average temperature significantly greater than the saturation temperature corresponding to the steam generator pressure at the safety valve setpoint. The thermal capacity of the RCS is greater than that of the secondary system, and because the full load average temperature is greater than the no load steam temperature, a heat sink is required to remove heat stored in the reactor coolant to prevent actuation of steam generator safety valves for a trip from full power.

This heat sink is provided by the combination of controlled release of steam to the condenser and by makeup of cold feedwater to the steam generators.

The Steam Dump System is controlled from the reactor coolant average temperature signal whose setpoint values are reset upon trip to the no load value. Actuation of the steam dump must be rapid to prevent actuation of the steam generator safety valves. With the dump valves open the average coolant temperature starts to reduce quickly to the no load setpoint. A direct feedback of temperature acts to proportionally close the valves to minimize the total amount of steam which is bypassed.

Following the turbine trip, the steam voids in the steam generator will collapse and the fully opened feedwater valves will provide sufficient feedwater flow to restore water level in the downcomer. The feedwater flow is cut off when the average coolant temperature decreases below a given temperature value or when the steam generator water level reaches a given high level.

Additional feedwater makeup is then controlled manually to restore and maintain steam generator water level while assuring that the reactor coolant temperature is at the desired value. Heat removal is maintained by the steam header pressure controller (manually selected) which controls the amount of steam flow to the condensers. This controller operates a portion of the same steam dump valves to the condensers which are used during the initial transient following turbine and reactor trip.

The pressurizer pressure and level fall rapidly during the transient because of coolant contraction. The pressurizer water level is programmed so that the level following the turbine and reactor trip is above the low level safety injection setpoint. If heaters become uncovered following the trip, the CVCS will provide full charging flow to restore water level in the pressurizer. Heaters are then turned on to restore pressurizer pressure to normal.

7.7.3.6 In-Core Instrumentation

The In-Core Instrumentation System consists of 58 (see Note 1) flux thimbles, which run the length of selected fuel assemblies to permit measurement of the neutron flux distribution within the reactor core, and 58 (see Note 1) thermocouples located at the top of the flux thimbles to measure coolant outlet temperature. The high pressure seals for the thermocouples and flux thimbles are shown on Figure 7.7-4.

The data obtained from the in-core temperature and flux distribution instrumentation system, in conjunction with previously determined analytical information, can be used to determine the fission power distribution in the core at any time throughout core life. This method is more accurate than using calculational techniques alone. Once the fission power distribution has been established, the maximum power output is primarily determined by thermal power distribution and the thermal and hydraulic limitation which determine the maximum core capability.

The in-core instrumentation provides information which may be used to calculate the coolant enthalpy distribution: the fuel burnup distribution, and to estimate the coolant flow distribution.

Both radial and azimuthal symmetry of power distributions may be evaluated by comparing the detector and thermocouple information from one quadrant with similar data obtained from the other three quadrants.

7.7.3.6.1 Thermocouples

Chromel-alumel thermocouples are routed through the annular area between the inside and outside tubes of the flux thimble and terminate at the top of the flux thimble which is at the top of core. Each of the 58 (see Note 1[*]) flux thimbles has a back-up thermocouple to provide greater system availability. The thermocouples are integral with the flux thimbles. If both thermocouples fail, they can be replaced by replacing the flux thimbles.

Thermocouple readings are monitored by the core exit thermocouple processor, SPDS, and the computer. The core exit thermocouple system, including the processor, meets R.G.1.97 requirements.

7.7.3.6.2 Moveable Miniature Neutron Flux Detectors

Miniature neutron flux detectors, remotely positioned in the core, provide remote readout for flux mapping. The basic system for the insertion of these detectors is shown on Figures 7.7-4 and 7.7-6. Retractable thimbles, into which the miniature detectors are driven, are pushed into the reactor core through conduits that extend from the bottom of the reactor vessel down through the concrete shield area, then to a thimble seal table.

The thimbles are closed at the leading ends, are dry inside, and serve as the pressure barrier between the reactor water pressure and the atmosphere. Mechanical seals between the retractable thimbles and the conduits are provided at the seal line. The thimbles consist of a tube within a tube. The space between each inner and outer tube is used to route the thermocouple wires. Normally, only the outside of the outer tube is exposed to reactor pressure. However, on a failure of the outer tube, the inner tube can withstand full reactor pressure.

During reactor operation, the retractable thimbles are stationary. They are extracted downward from the core during refueling to avoid interference within the core. A space above the seal line is provided for the retraction operation.

The drive system for the insertion of the miniature detectors consists of six combinations of drive assemblies, five-path rotary transfer devices, and ten-path rotary transfer devices, as shown on Figure 7.7-6. The drive system pushes hollow helical-wrap drive cables into the core. Miniature detectors are attached to the leading ends of the cables and small diameter sheathed coaxial cables threaded through the hollow centers back to the ends of the drive cables. Each drive assembly consists of a gear motor which pushes a helical-wrap drive cable and detector through a selective thimble path by means of a special drive box which includes a storage

[*] There are 58 locations designated as Flux Thimble and Thermocouple locations (see Figures 4.4-16 and 4.4-17). The minimum number of Flux Thimbles and Thermocouples in use, as well as the minimum number per quadrant, is controlled by the Technical Specifications.

device that accommodates the total drive cable length. Further information on mechanical design and support is provided in Section 3.

The Control and Readout System provides means to rapidly traverse the miniature neutron detectors to and from the reactor core while plotting the thermal neutron flux versus detector position. The Control System for Unit 1 consists of two sections: one physically mounted with the drive units, and the other contained in the control room. The Control System for Unit 2 consists of two sections: the Motor Control Cabinet in the Electrical Penetration Area, and HMI located in the Control Equipment Room. Limit switches in each tubing run provide signals to the path display to indicate the active detector path during the flux mapping operation. In Unit 1 each gear box drives an encoder for position indication; in Unit 2 the system includes equipment to provide position indication for each detector. One five-path group path selector is provided for each drive unit to route the detector into one of the flux thimble groups or to storage. A ten-path rotary transfer assembly is used to route a detector into any one of up to ten selectable thimbles. Manually-operated isolation valves on each thimble allow free passage of the detector and drive cable when open. When closed, these valves prevent steam leakage from the core in case of a thimble rupture. Provision is made to separately route each detector into a common flux thimble to permit cross calibration of the detectors.

The Control Equipment Room contains the necessary equipment for control, position indication and flux recording. Panels are provided to indicate the position of the detectors, and for plotting the flux level versus the detector position. In Unit 1 a "flux-mapping" operation consists of selecting (by panel switches) flux thimbles in given fuel assemblies at various core locations; in Unit 2 a “flux-mapping” operation consists of initiating the PLC program flux thimbles in given fuel assemblies at various core locations. The detectors are driven to the top of the core and stopped automatically. An x-y plot (position vs. flux level) is initiated with the slow withdrawal of the detectors through the core from top to a point below the bottom. In a similar manner, other core locations are selected and plotted.

Each detector provides axial flux distribution data along the center of a fuel assembly. Various radial positions of detectors are then compared to obtain a flux map for a region of the core.

The thimbles are distributed nearly uniformly over the core, with about the same number of thimbles in each quadrant. Current NRC approved methods (Section 4.3.4, Reference 2) for Westinghouse plants using the moveable in-core fission chamber detector system statistically support a 4% nuclear enthalpy rise hot channel peaking factor ($F\Delta H$) uncertainty. Similarly, a 5% measurement uncertainty and a 3% manufacturing tolerance has been approved for the local nuclear heat flux hot channel factor (F_Q). Therefore, the measured $F\Delta H$ will be increased by 4% for possible instrument error, while the measured F_Q will be increased by 8.15% (1.05 x 1.03) to allow for possible instrument error and manufacturing tolerances. The departure from nucleate boiling ratio (DNBR) calculated with the measured hot channel factor will be compared to the DNBR calculated from the design nuclear hot channel factors. If the measured power peaking is larger than expected, reduced power capability will be indicated.

This unit will have the capability for using fixed in-core detectors, if required.

7.7.3.7 Operating Control Systems

7.7.3.7.1 Control Room Availability

The Control Room is designed to be available at all times. Safe occupancy of the Control Room during an abnormal condition is provided in the design of the Auxiliary Building. Adequate shielding, ventilation and air conditioning are used to maintain the environment within established limits (see Section 9.4).

To limit the possibility and potential magnitude of a fire in the Control Room, Relay Room or Control Equipment Room, many precautions are taken. Noncombustible materials are used in construction. Control Room furnishings are of metal construction. The control console and side panels are made of steel. Combustible supplies, such as records, logs, procedures, manuals, etc., are limited to the number required for station operation. All areas of the Control, Relay and Control Equipment Rooms are readily accessible. Portable fire extinguishers and breathing apparatus are provided. Detectors sensitive to smoke and combustion are installed in the Control Room, control console, ventilation plenum and throughout the Relay and Control Equipment Rooms. Fire detection alarms are provided in the Control Room with indication of the detector zone actuated. Further description of the fire protection provisions is given in Section 9.5.

The probability of the Control Room becoming inaccessible as a result of any cause is considered extremely small. If the operator must leave the Control Room, however, operating procedures require that he trip the reactor and turbine generator prior to leaving, thus ensuring control at the Hot Shutdown Control Stations. If necessary, the required trips can be accomplished at locations outside the Control Room.

7.7.3.7.2 Control Room Evaluation

The Control Room is designed to provide the operator with the controls, indications and alarms necessary to control the unit during normal or abnormal conditions. It is also designed for continuous occupancy, but provisions are made to attain and maintain hot shutdown from outside the control room.

7.7.3.8 Secondary System Design Evaluation

All equipment is designed with highly reliable components. Maximum use is made of solid state components in the electronic instruments; spring loaded diaphragm control valves are employed to fail safe on loss of air or power.

All instrumentation and control, where possible, is installed outside of the containment structure and in locations accessible for inspection and maintenance. Automatic control instruments in selected systems are provided with backup manual control. Alarms are provided to warn of abnormal conditions.

7.7.4 References for Section 7.7

1. Blanchard, A. and Katz, D.N., "Solid State Rod Control System - Full Length," WCAP-9012-L (Proprietary), January 1970 and WCAP-7778 (Non-Proprietary).

2. T. Baker, B. Cassidy, J. Freeland, S. Fowler "Rod Control System Evaluation Program" June 7, 1994; WCAP-13864 Rev. 1.

3. Blanchard, A., "Rod Position Monitoring," WCAP-7571, March 1971.

	Rod Stop	Actuation Signal	Rod Motion To Be Blocked
1.	Nuclear Overpower	1/4 high power range nuclear flux or 1/2 high intermediate range nuclear flux	Automatic and Manual Withdrawal
2.	High ΔT	2/4 overpower ΔT or 2/4 overtemperature ΔT	Automatic and Manual Withdrawal
3.	Low Power	Low turbine steamline inlet pressure	Automatic Withdrawal

Actuation of rod stop No. 2 above is accompanied by the initiation of turbine load reference reduction.

The alarm groupings are as follows:

DISPLAY A

ANNUNCIATOR

TEST/TROUBLE ALARMS

MISCELLANEOUS

FIRE PROTECTION

DISPLAY B

MISCELLANEOUS WATER SYSTEMS

VITAL DC

VITAL INVERTERS

MISCELLANEOUS ELECTRICAL

SERVICE WATER

DISPLAY C

WASTE DISPOSAL

LEAK DETECTION

AUXILIARY COOLING

CONTAINMENT

DISPLAY D

ECCS

REACTOR COOLANT SYSTEM

DISPLAY E

CHEMICAL AND VOLUME CONTROL SYSTEM

PRESSURIZER

NUCLEAR INSTRUMENTATION SYSTEM

ROD CONTROL

DISPLAY F

REACTOR TRIP

SAFETY INJECTION

TURBINE TRIP

DISPLAY G

MAIN STEAM

TURBINE AND CONDENSER

FEEDWATER

TURBINE AUXILIARY COOLING

DISPLAY H

MAIN GENERATOR

25KV TRANSFORMERS

DISPLAY J

VITAL AC

DIESEL GENERATORS

GROUP BUSES

DISPLAY K

CIRCULATING WATER

13KV SYSTEM

500KV SYSTEM

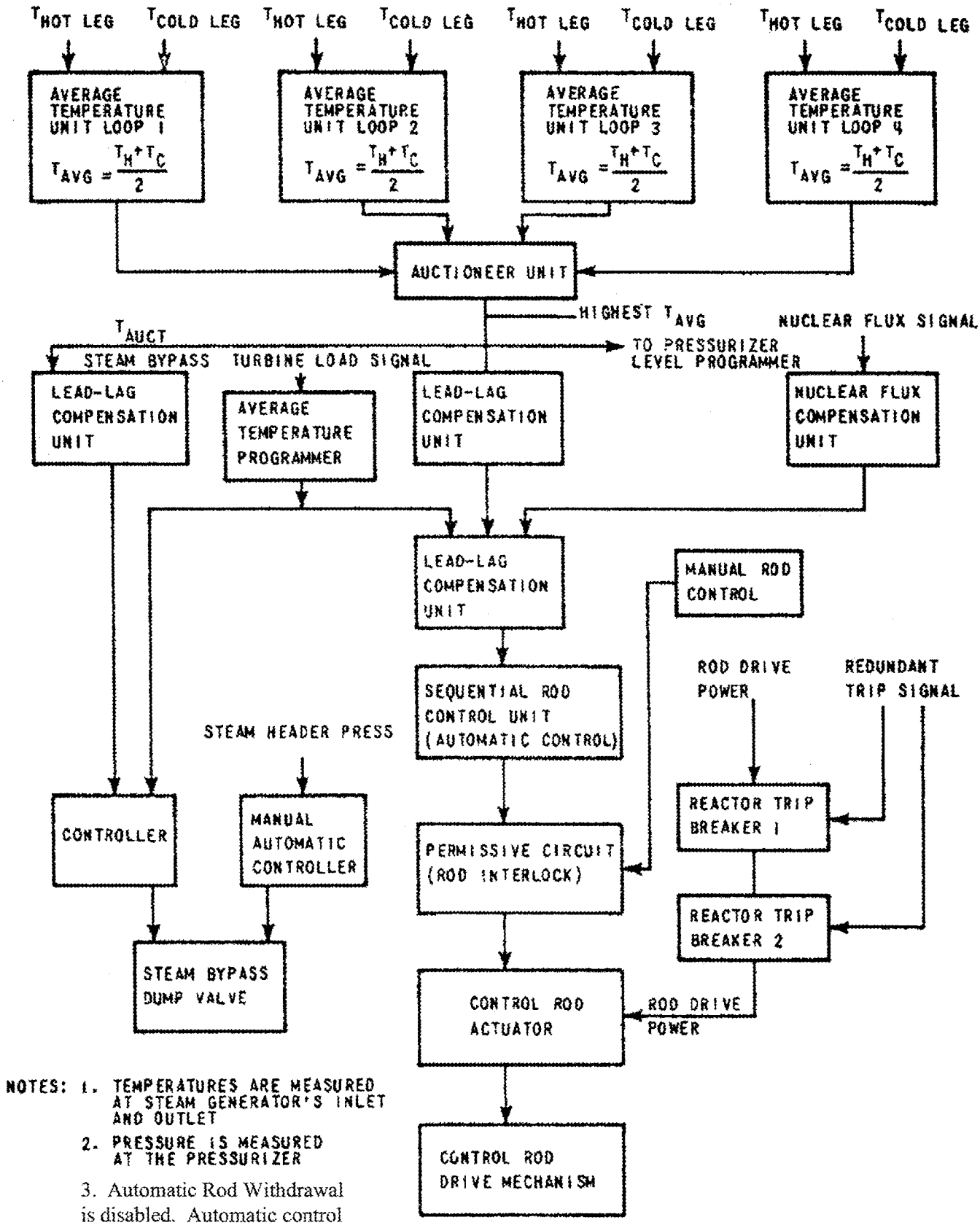

NOTES: 1. TEMPERATURES ARE MEASURED AT STEAM GENERATOR'S INLET AND OUTLET

2. PRESSURE IS MEASURED AT THE PRESSURIZER

3. Automatic Rod Withdrawal is disabled. Automatic control will only insert rods.

PSEG Nuclear LLC SALEM NUCLEAR GENERATING STATION	BLOCK DIAGRAM OF REACTOR CONTROL SYSTEM Updated FSAR REV 31 DECEMBER 05, 2019 Figure 7.7-1

© 2013 PSEG Nuclear LLC. All Rights Reserved.

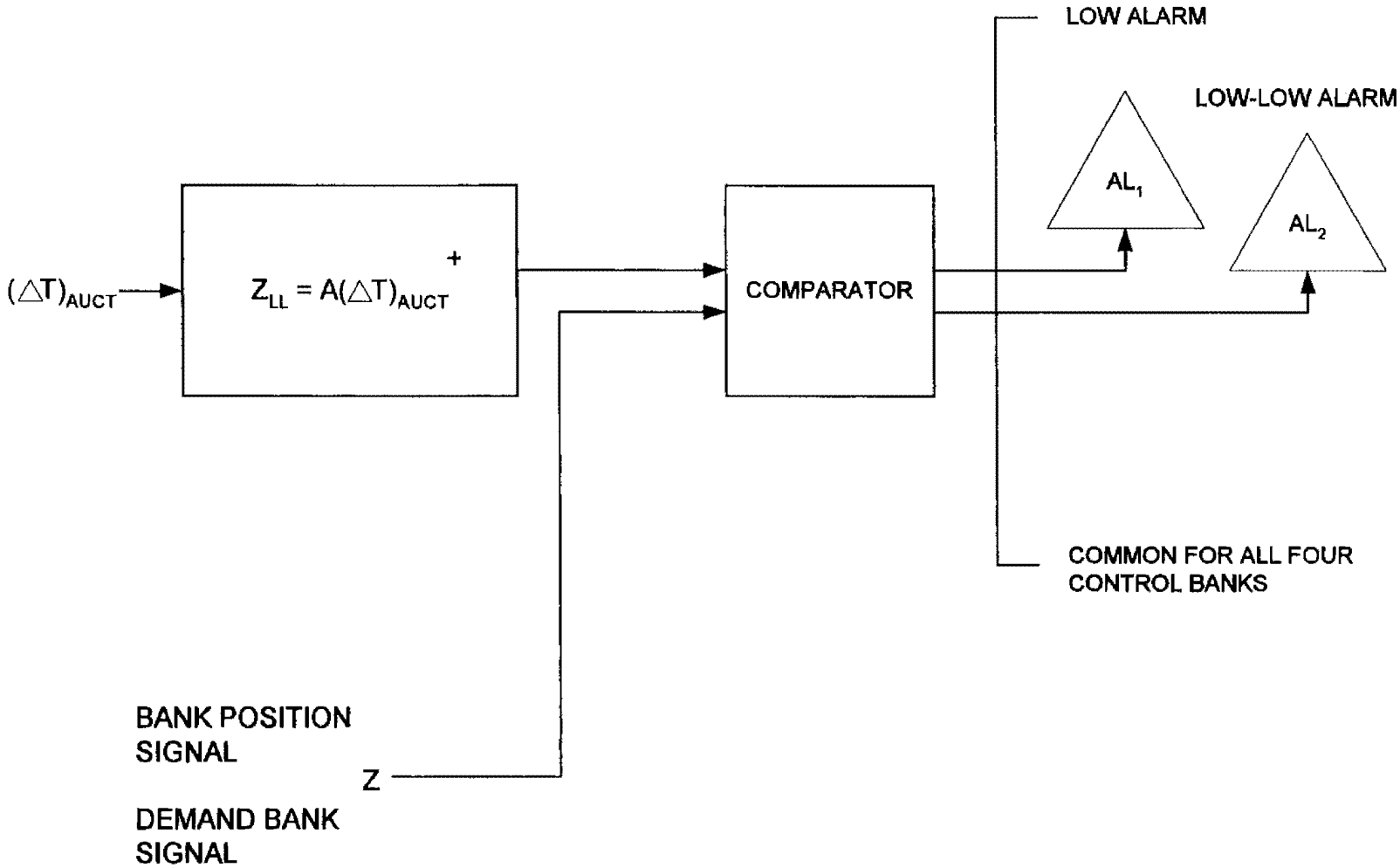

TYPICAL OF ONE CONTROL BANK

NOTE: 1. ANALOG CIRCUITRY IS USED FOR THE COMPARATOR NETWORK

2. COMPARISON IS DONE FOR ALL CONTROL BANKS

PUBLIC SERVICE ELECTRIC AND GAS COMPANY
SALEM NUCLEAR GENERATING STATION

Control Bank Rod Insertion Monitor

Updated FSAR
Revision 16

Figure 7.7-2
January 31, 1998

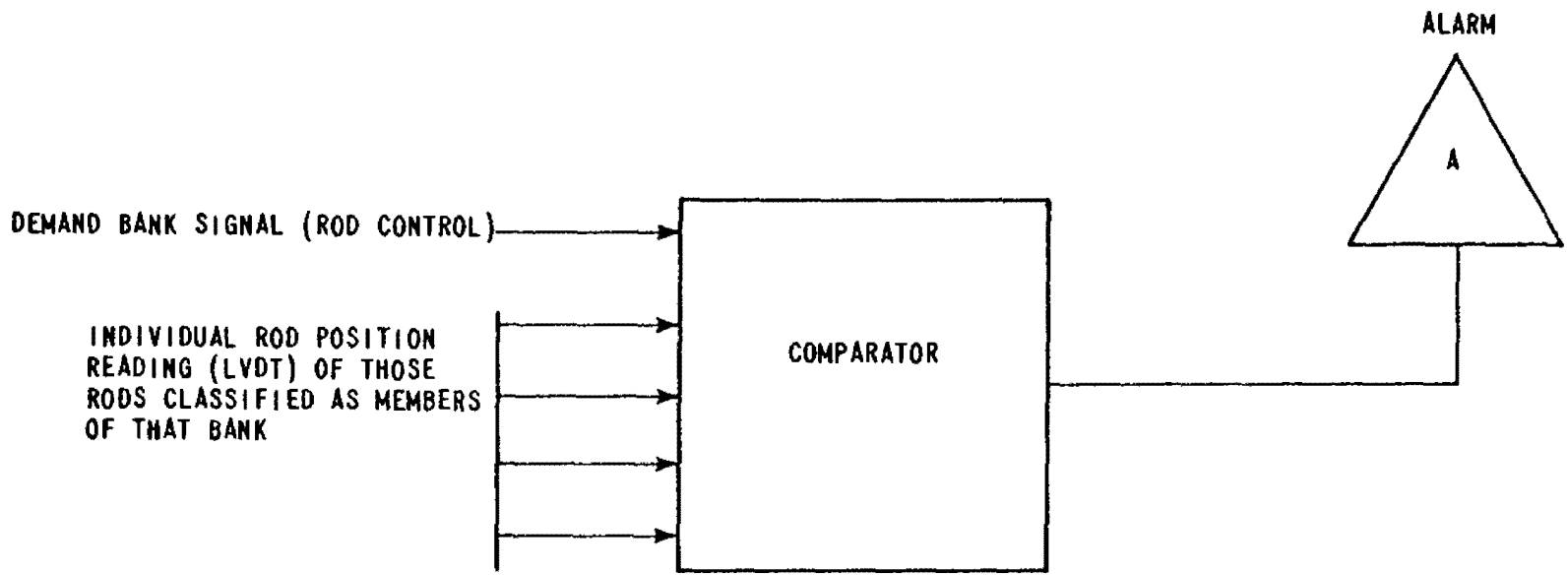

NOTE:
1. DIGITAL OR ANALOG SIGNALS MAY BE USED FOR THE COMPARATOR COMPUTER INPUTS.
2. THE COMPARATOR WILL ENERGIZE THE ALARM IF THERE EXISTS A POSITION DIFFERENCE GREATER THAN A PRESENT LIMIT BETWEEN ANY INDIVIDUAL ROD AND THE DEMAND BANK SIGNAL.
3. COMPARISON IS INDIVIDUALLY DONE FOR ALL CONTROL BANKS.

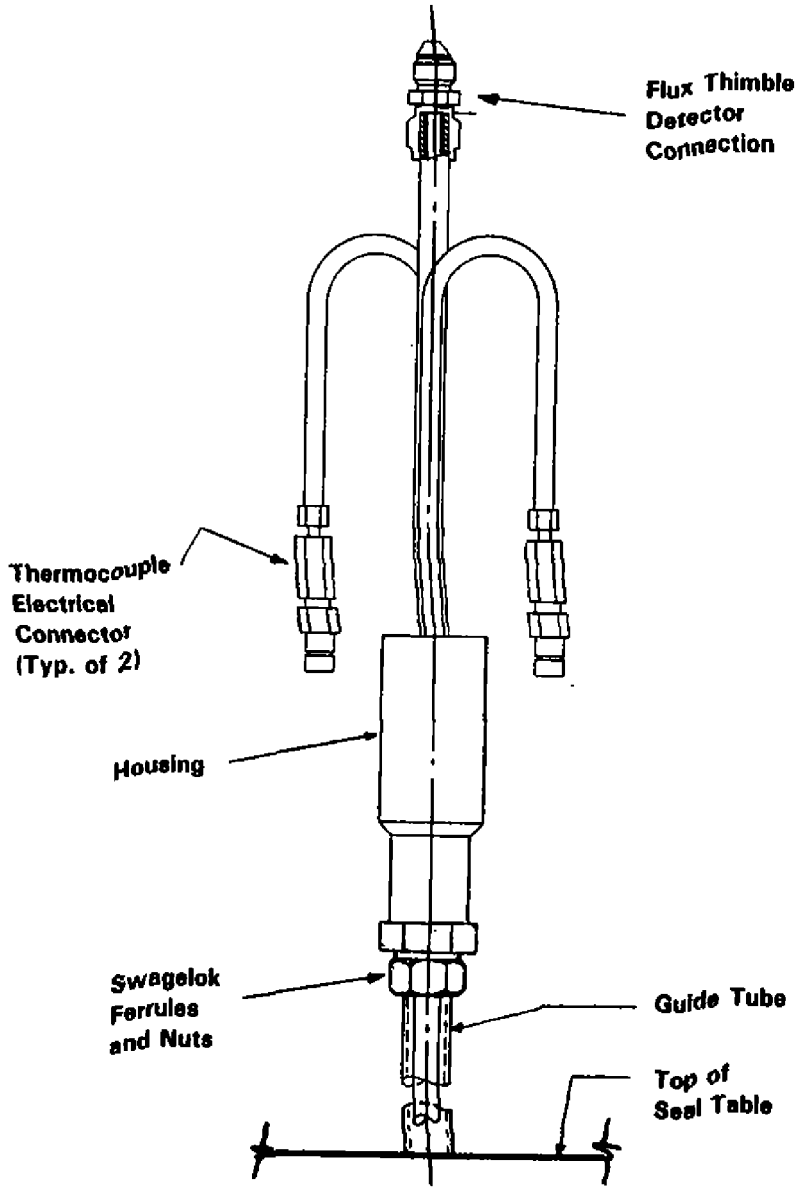

THIMBLE HIGH PRESSURE SEAL

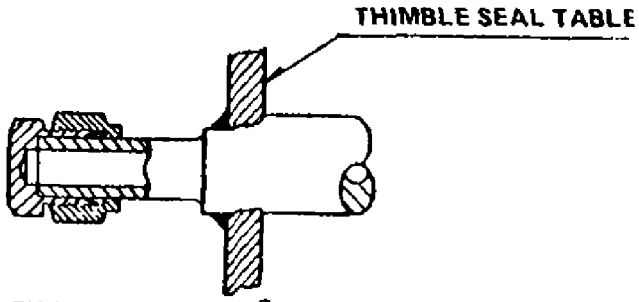

THIMBLE SEAL PLUG

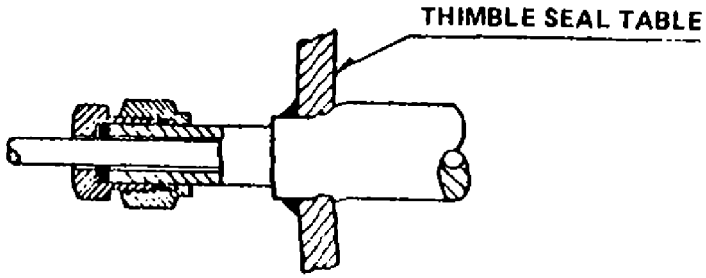

THIMBLE LOW PRESSURE SEAL
(REFUELING ONLY)

THIMBLE GUIDE TUBE WELD UNION

THIMBLE GUIDE TUBE TO VESSEL
PENETRATION TUBE WELD JOINT

NOTE: THIS IS A GENERAL DEPICTION OF THE FLUX THIMBLE GUIDE TUBE AND THEMOCOUPLE ASSEMBLY. PHYSICAL DETAILS WILL VARY WITH EQUIPMENT UPDATES AND ALTERNATE SUPPLIES.

© 2000 PSEG Nuclear, LLC. All Rights Reserved.

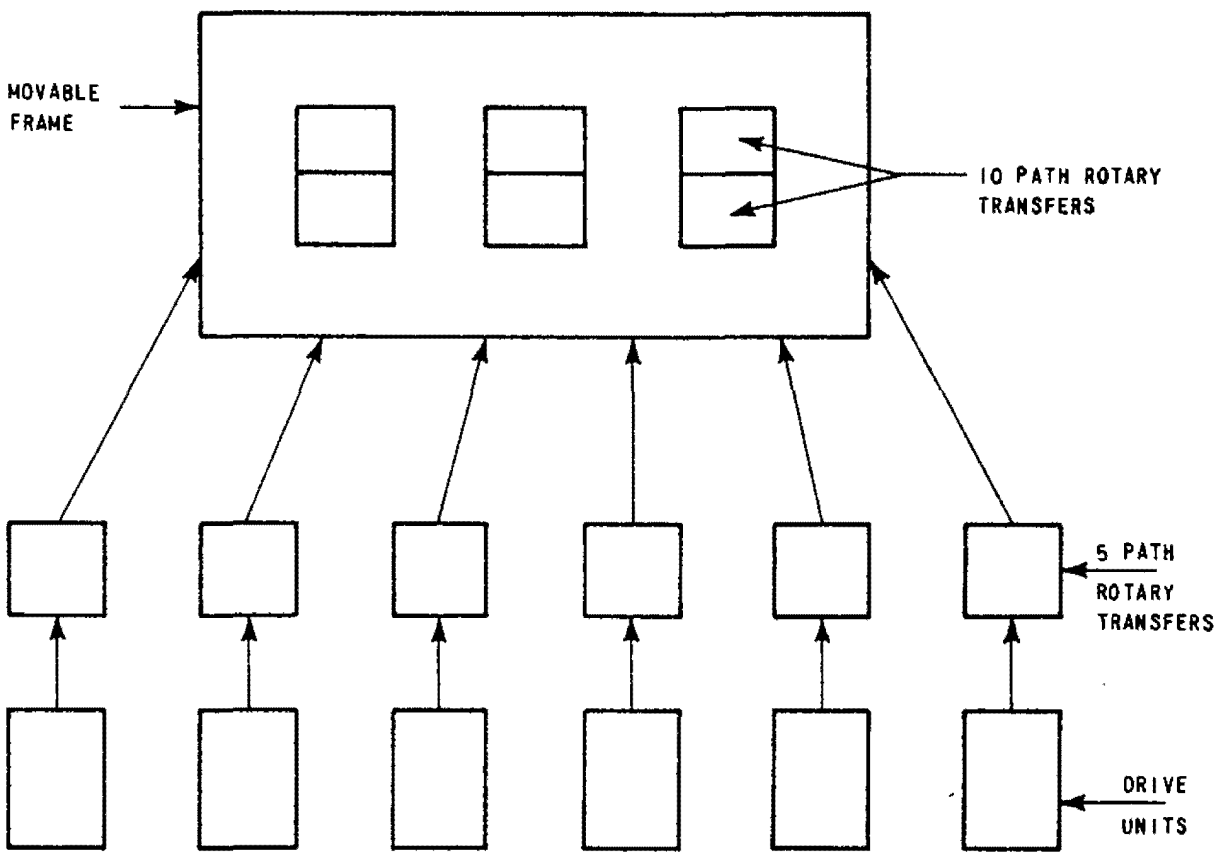

REVISION 8
FEBRUARY 15, 1987

PUBLIC SERVICE ELECTRIC AND GAS COMPANY SALEM NUCLEAR GENERATING STATION	Schematic Arrangement of In-Core Flux Detectors (Plan View)
	Updated FSAR — Figure 7.7-5

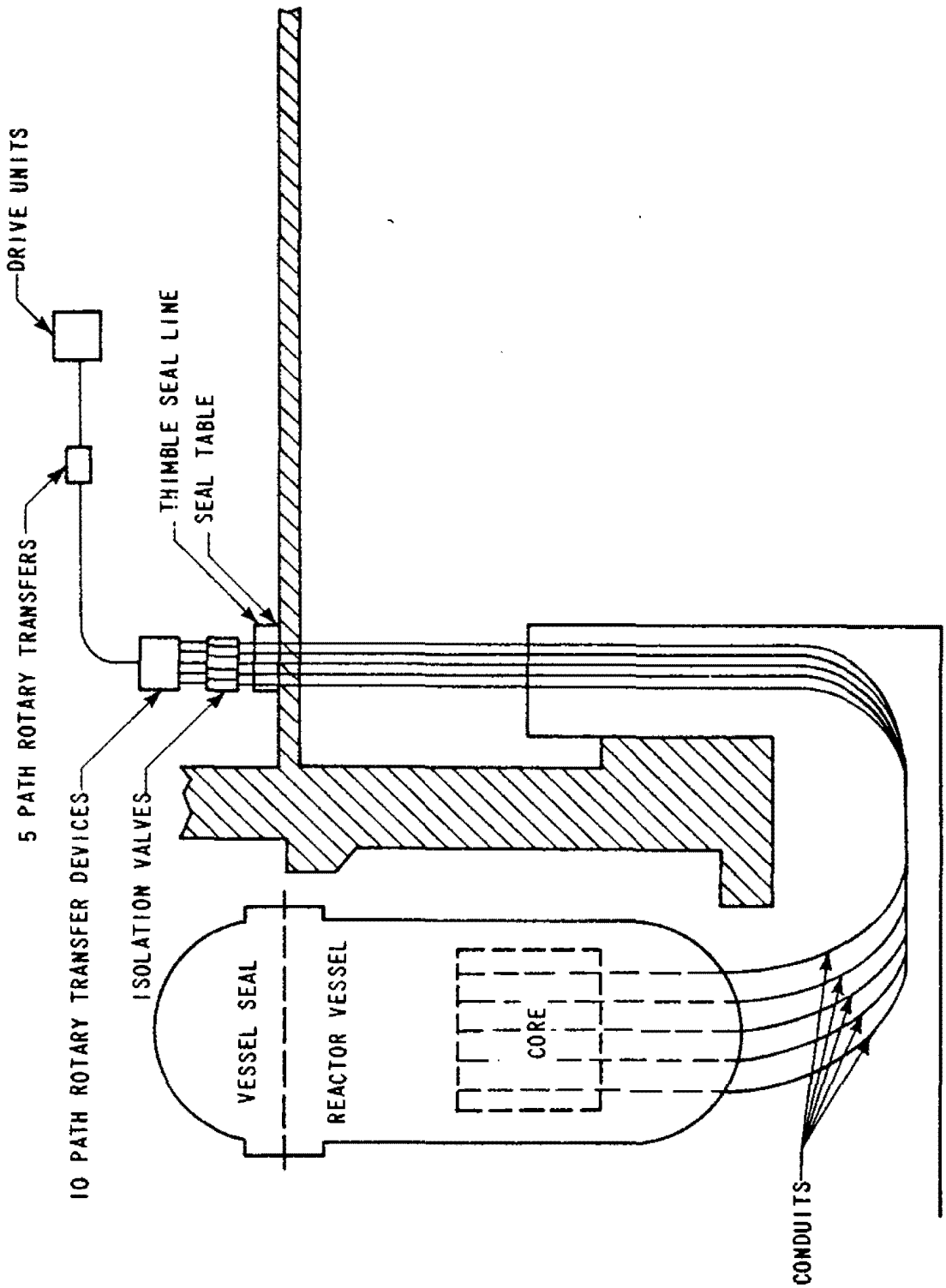

REVISION 6
FEBRUARY 15, 1987

PUBLIC SERVICE ELECTRIC AND GAS COMPANY SALEM NUCLEAR GENERATING STATION	Typical Arrangement of Movable Miniature Neutron Flux Detector System (Elevation)
	Updated FSAR — Figure 7.7-6

INPUT SIGNAL VALIDATION SCHEME FOR SALEM
ADVANCED DIGITAL FEEDWATER CONTROL SYSTEM

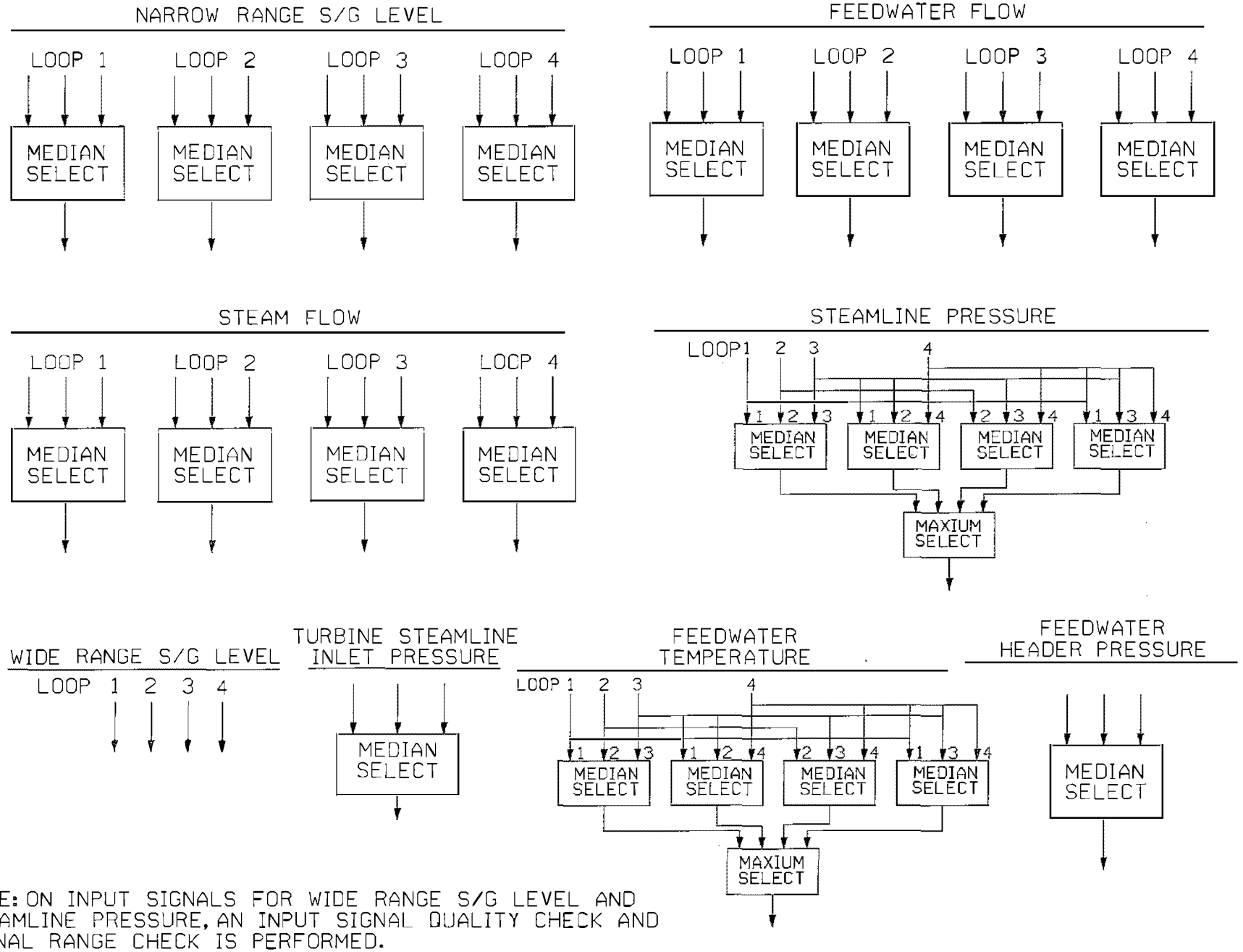

NOTE: ON INPUT SIGNALS FOR WIDE RANGE S/G LEVEL AND STEAMLINE PRESSURE, AN INPUT SIGNAL QUALITY CHECK AND SIGNAL RANGE CHECK IS PERFORMED.

PSEG Nuclear, LLC

SALEM NUCLEAR GENERATING STATION

Salem Nuclear Generating Station
ADVANCED DIGITAL FEEDWATER CONTROL SYSTEM
INPUT SIGNAL VALIDATION SCHEME

Updated FSAR

Figure 7.7-7

REVISION 29, JANUARY 30, 2017

© 2000 PSEG Nuclear, LLC. All Rights Reserved.

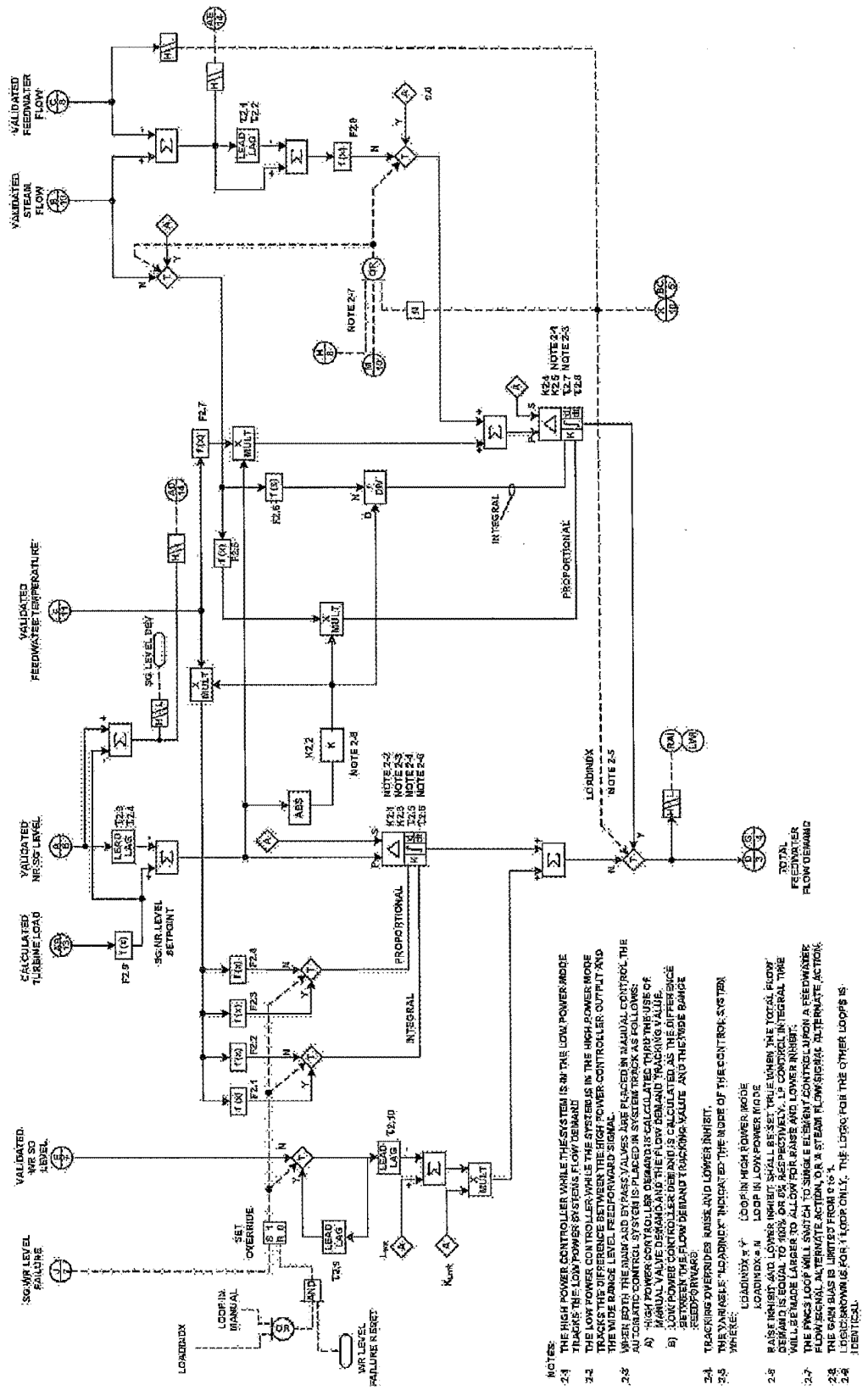

REVISON 29, JANUARY 30, 2017

PSEG Nuclear, LLC SALEM NUCLEAR GENERATING STATION	Salem Nuclear Generating Station ADVANCED DIGITAL FEEDWATER CONTROL SYSTEM FEEDWATER CONTROL FUNCTIONAL LOGIC WITH ALGORITHMS
	Updated FSAR — Figure 7.7-8

© 2000 PSEG Nuclear, LLC. All Rights Reserved.

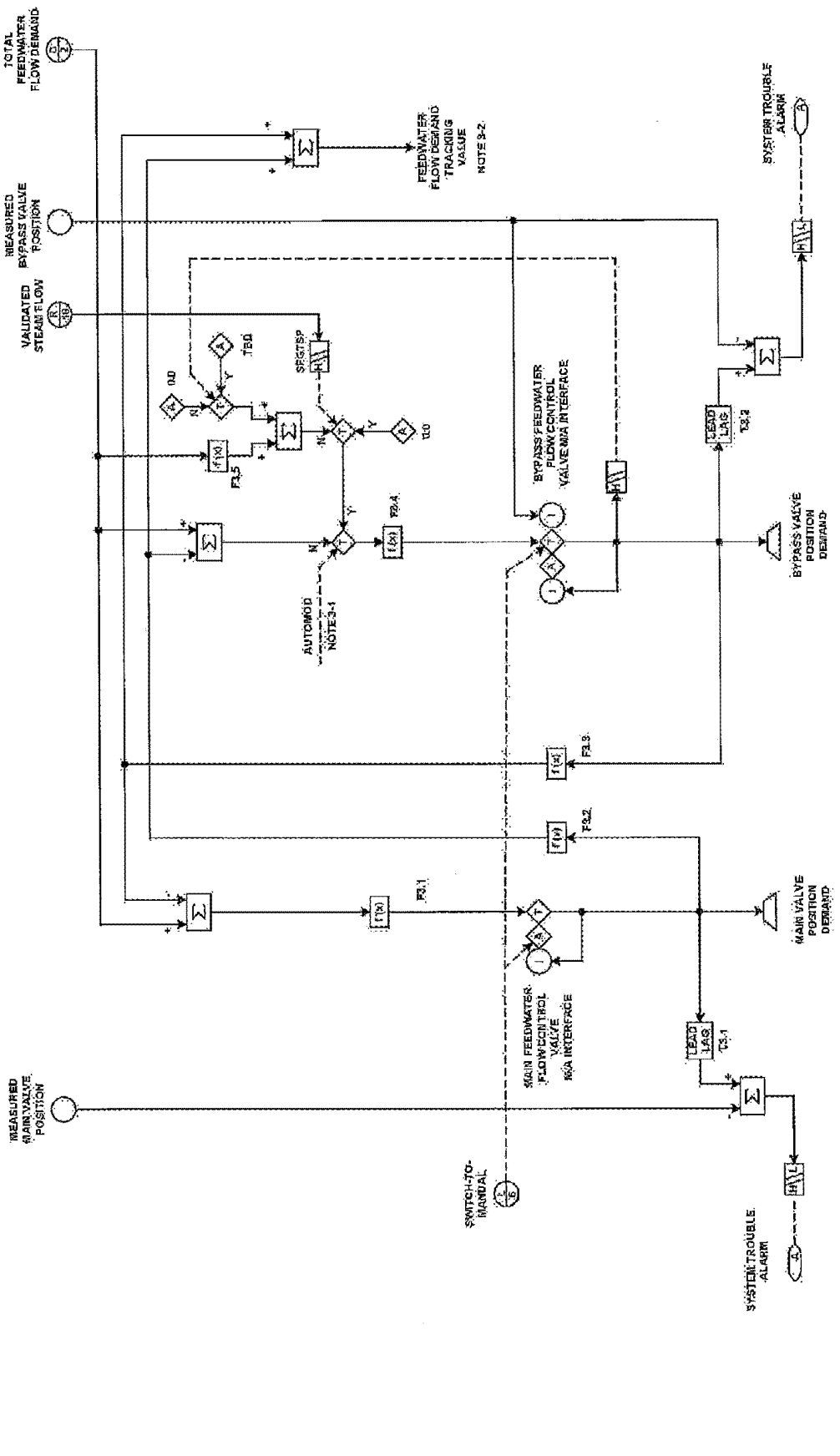

REVISION 29, JANUARY 30, 2017

PSEG Nuclear, LLC SALEM NUCLEAR GENERATING STATION	Salem Nuclear Generating Station ADVANCED DIGITAL FEEDWATER CONTROL SYSTEM FEEDWATER CONTROL VALVE LINERIZATION FUNCTIONAL BLOCK DIAGRAM
	Updated FSAR — Figure 7.7-9

© 2013 PSEG Nuclear LLC. All Rights Reserved.

7.8 ATWS Mitigation System Actuation Circuitry (AMSAC)

7.8.1 Description

7.8.1.1 System Description

The ATWS (Anticipated Transient Without Scram) Mitigation System Actuation Circuitry (AMSAC) provides a backup to the Reactor Trip System (RTS) and ESF Actuation System (ESFAS) for initiating turbine trip and auxiliary feedwater flow in the event an anticipated transient results (e.g., in the complete loss of main feedwater). The AMSAC is independent of and diverse from the RTS and ESFAS, with the exception of the final actuation devices, and is classified as control-grade equipment. It is a highly reliable, microprocessor-based, single-train system powered by a non-Class 1E source.

The AMSAC continuously monitors level in the steam generators, which is an anticipatory indication of a loss of heat sink, and initiates certain functions when the level drops below a predetermined setpoint for at least a preselected time and for three of the four steam generator levels. These initiated functions are tripping of the turbine, initiation of auxiliary feedwater, and isolation of steam-generator blowdown and sample lines.

The AMSAC is designed to be highly reliable, resistant to inadvertent actuation, and easily maintained. Reliability is assured through the use of internal redundancy and continual self-testing by the system. Inadvertent actuations are minimized through the use of internal redundancy and majority voting at the output stage of the system. The time delay on low steam generator level and the coincidence logic used also minimize inadvertent actuations.

The AMSAC automatically performs its actuations when above a preselected power level, which is determined using turbine steamline inlet pressure, and remains armed sufficiently long after that pressure drops below the setpoint to ensure that its function will be performed in the event of a turbine trip.

7.8.1.2 Equipment Description

The AMSAC consists of a single train of equipment located in a seismically qualified cabinet.

The design of the AMSAC is based on the industry standard Intel multibus format, which permits the use of various readily available, widely used microprocessor cards on a common data bus for various functions.

The AMSAC consists of the following:

1. Steam generator level sensing - Measured with four existing differential pressure-type level transmitters for each of the main steam generators.

2. Turbine steamline inlet pressure - Measured with two existing pressure transmitters located in the steam supply line near the turbine.

3. System hardware - Consists of two primary systems: the Actuation Logic System (ALS) and the Test/Maintenance System (T/MS).

   a. Actuation Logic System

      The ALS monitors the analog inputs, performs the functional logic required, provides actuation outputs to trip the turbine and initiate auxiliary feedwater flow, and provides status information to the T/MS. The ALS consists of three groups of input/output (I/O) modules, three actuation logic processors (ALPs), two majority voting modules, and two output relay panels. The I/O modules provide signal conditioning, isolation, and test features for interfacing the ALS and T/MS. Conditioned signals are sent to three identical ALPs for analog-to-digital conversion, setpoint comparison, and coincidence logic performance. Each of the ALPs performs identical logic calculations using the same inputs and derives component actuation demands, which are then sent to the majority voting modules. The majority voting modules perform a two-out-of-three vote on the ALP demand signals. These modules drive the relays providing outputs to the existing turbine trip and auxiliary feedwater initiation circuits.

   b. Test/Maintenance System

      The T/MS provides the AMSAC with automated and manual testing, as well as a maintenance mode. Automated testing is the continuously performed self-checking done by the system during normal operation. ALS status is monitored by the T/MS and sent to the plant computer and main control board. Manual testing of the system by the maintenance staff can be performed online to provide assurance that the ALS system is fully operational. The maintenance mode permits the maintenance staff, under administrative control, to modify channel setpoints, channel status, and timer values and to initiate channel calibration.

      The T/MS consists of a test/maintenance processor, a digital-to-analog conversion board, a memory board, expansion boards, a self-health board, digital output modules, a test/maintenance panel, and a portable terminal/printer.

4. Equipment Actuation

   The output relay panels provide component actuation signals through isolation relays, which then drive the final actuation circuitry for initiation of auxiliary feedwater and for turbine trip. Existing actuation devices of the component are used.

7.8.1.3 Functional Performance Requirements

The AMSAC automatically initiates auxiliary feedwater, trips the turbine, and isolates steam generator blowdown and sampling lines. Analyses have shown that the most limiting ATWS event is either a loss of feedwater or a loss of load event without a reactor trip. Therefore, the AMSAC performs its mitigative actuations for the following reasons:

1. To ensure a secondary heat sink following an anticipated transient (ANS Condition II) without a reactor trip.

2. To limit core damage following an anticipated transient without a reactor trip.

3. To ensure that energy generated in the core is compatible with design limits to protect the reactor coolant pressure boundary by maintaining reactor coolant pressure to within ASME Stress Level C.

7.8.1.4 AMSAC Interlocks

A single interlock, designated as C-20, is provided to allow for automatic arming and blocking of the AMSAC. The system is blocked at sufficiently low reactor power levels when actions taken by the AMSAC following an ATWS need not be automatically initiated. Turbine steamline inlet pressure in a two-out-of-two logic scheme is used for this permissive. Turbine steamline inlet pressure above the setpoint will automatically defeat any block, i.e., arm the AMSAC. Dropping below this setpoint will automatically block the AMSAC. Removal of the C-20 permissive is automatically delayed for a predetermined time. The operating status of the AMSAC is displayed on the main control board.

7.8.1.5 Steam Generator Level Sensor Arrangement

Steam generator level is determined by a differential pressure transmitter that measures the level drop in the steam generator. These steam generator level signals are used as input to the AMSAC and are isolated signals from the process protection cabinets routed through the control cabinets.

7.8.1.6 Turbine Impulse Chamber Pressure Arrangement

Turbine steamline inlet pressure is determined by a differential pressure transmitter that measures the pressure rise in the turbine. These pressure signals are used as input to AMSAC and are isolated signals from the process protection cabinets routed through the control cabinets.

7.8.1.7 Trip System

The differential pressure that is measured in the steam generator is used by the AMSAC to determine trip demand. Signal conditioning is performed on the transmitter output and used by each of the ALPs to derive a component actuation demand. If three of the four steam generators have a low level at a power level greater than the C-20 permissive, a trip demand signal is generated. This signal drives output relays to perform the necessary mitigative actions.

7.8.1.8 Isolation Devices

AMSAC is independent of the RTS and ESFAS. The AMSAC inputs that measure turbine steamline inlet pressure and narrow-range steam generator water level are derived from existing transmitters and channels within the process protection system. Connections to these

channels are made downstream of Class 1E isolation devices which are located within the process protection cabinets. These isolation devices ensure that the existing protection system continues to meet all applicable safety criteria by providing isolation. Buffering of the AMSAC outputs from safety-related final actuation device circuits is achieved through qualified relays. A credible fault occurring in the nonsafety-related AMSAC will not propagate through and degrade the RTS and ESFAS.

7.8.1.9 AMSAC Diversity from the Reactor Protection System

Equipment diverse from the RTS and ESFAS is used in the AMSAC to prevent common-mode failures that might affect the AMSAC and the RTS or ESFAS. The AMSAC is a digital, microprocessor-based system, with the exception of the analog steam generator level and turbine steamline inlet pressure transmitter inputs, whereas the reactor trip system utilizes an analog-based protection system. Also, where similar components are utilized for the same function in both AMSAC and the RTS, the components used in AMSAC are provided from a different manufacturer.

Common-mode failure of identical components in the analog portion of the RTS, resulting in the inability to generate a reactor trip signal, will not impact the ability of the digital AMSAC to generate the necessary mitigative actuations. Similarly, a postulated common-mode failure affecting similar components in ESFAS, affecting its ability to initiate auxiliary feedwater, and the same components in the AMSAC would impact the ability to automatically initiate auxiliary feedwater, but not the ability of the RTS to generate a reactor trip signal.

7.8.1.10 Power Supply

The AMSAC power supply is a non-Class 1E vital bus that is independent of RTS power supplies and backed by batteries independent of the existing batteries which supply the RTS.

7.8.1.11 Environmental Variations

The AMSAC equipment is located in a controlled environment such that variations in ambient conditions are minimized. No AMSAC equipment is located inside containment. The transmitters (steam generator level and turbine steamline inlet pressure) that supply the input into AMSAC are located inside containment and the turbine building, respectively. The existing equipment inside containment is qualified.

7.8.1.12 Setpoints

The AMSAC makes use of two setpoints in the coincidence logic to determine if mitigative functions are required. Water level in each steam generator is sensed to determine if a loss of secondary heat sink is imminent. The low-level setpoint is selected so that a true lowering of the level will be detected by the system. The normal small variations in steam generator level will not result in a spurious AMSAC signal.

The C-20 permissive setpoint is selected to be consistent with ATWS investigations showing that mitigative actions performed by the AMSAC need not be automatically actuated below a

certain power level. The maximum allowable value of the C-20 permissive setpoint is defined by these investigations.

To avoid inadvertent AMSAC actuation on the loss of one main feedwater pump, AMSAC actuation is delayed by a defined amount of time. This ensures that the reactor protection system will provide the first trip signal.

To ensure that the AMSAC remains armed sufficiently long to permit its function in the event of a turbine trip, the C-20 permissive is maintained for a preset time delay once the turbine steamline inlet pressure drops below the setpoint.

The setpoints and the capability for their modification in the AMSAC are under administrative control.

7.8.2 Analysis

7.8.2.1 Safety Classification/Safety-Related Interface

The AMSAC is not safety-related and therefore need not meet the requirements of IEEE 279-1971. The AMSAC has been implemented such that the RTS and ESFAS continue to meet all applicable safety-related criteria. The AMSAC is independent of the RTS and ESFAS. The isolation provided between the RTS and the AMSAC and between the ESFAS and the AMSAC by the isolator modules and the isolation relays ensures that applicable safety-related criteria are met for the RTS and the ESFAS.

7.8.2.2 Redundancy

System redundancy has not been provided. Since AMSAC is a backup nonsafety-related system to the redundant RPS, redundancy is not required. To ensure high system reliability, portions of the AMSAC have been implemented as internally redundant, such that a single failure of an input channel or ALP will neither actuate nor prevent actuation of the AMSAC.

7.8.2.3 Diversity from the Existing Trip System

Diverse equipment has been selected in order that common-cause failures affecting both the RTS and the AMSAC, or both the ESFAS and the AMSAC, will not render these systems inoperable simultaneously. A more detailed discussion of the diversity between the RTS and the AMSAC and between the ESFAS and the AMSAC is presented in Section 7.8.1.1.

7.8.2.4 Electrical Independence

From the sensor output up to the final actuation devices, the AMSAC is electrically independent of the RTS and ESFAS. Isolation devices are provided to isolate the nonsafety AMSAC circuitry from the safety-related actuation circuits of the auxiliary feedwater system.

7.8.2.5 Physical Separation from the RTS and ESFAS

AMSAC must be and is physically separated from existing protection system hardware. AMSAC outputs are provided from separate relay panels within the cabinets. The two trains are separated within the AMSAC cabinet by a combination of metal barriers, conduit, and distance.

7.8.2.6 Environmental Qualification

Equipment related to the AMSAC is qualified to operate under conditions resulting from anticipated operational occurrences for the respective equipment location. The AMSAC equipment located outside containment in a mild environment follows the same design standard that currently exists for non-Class 1E control grade equipment.

7.8.2.7 Seismic Qualification

It is required that only the isolation devices comply with seismic qualification. The AMSAC output isolation device is qualified in accordance with a program that was developed to implement the requirements of IEEE Standard 344-1975, "IEEE Standard for Seismic Qualification of Class 1E Electrical Equipment for Nuclear Power Generating Stations."

7.8.2.8 Test, Maintenance, and Surveillance Quality Assurance

NRC Generic Letter 85-06, "Quality Assurance Guidance for ATWS Equipment That is not Safety-Related," requires quality assurance procedures commensurate with the nonsafety-related classification of the AMSAC. The quality controls for the AMSAC are, at a minimum, consistent with existing plant procedures or practices for nonsafety-related equipment.

Design of the AMSAC followed procedures relating to equipment procurement, document control, and specification of system components, materials, and services. In addition, specifications also define quality assurance practices for inspections, examinations, storage, shipping, and tests as appropriate to a specific item or service.

A computer software verification program and a firmware validation program have been implemented commensurate with the nonsafety-related classification of the AMSAC to ensure that the system design requirements implemented with the use of software have been properly implemented and to ensure compliance with the system functional, performance, and interface requirements.

System testing is completed prior to installation and operation of the AMSAC, as part of the normal factory acceptance testing and validation program. Periodic testing is performed both automatically, through use of the system automatic self-checking capability, and manually, under administrative control via the AMSAC test/maintenance panel.

7.8.2.9 Power Supply

Power to the AMSAC is from a battery-backed, non-Class 1E vital bus independent of power supplies for the RTS and ESFAS. The station battery supplying power to the AMSAC is independent of those used for the RTS and ESFAS. The AMSAC is an energize-to-actuate system capable of performing its mitigative functions with a loss of offsite power.

7.8.2.10 Testability at Power

The AMSAC is testable at power. This testing is done via the system test/maintenance panel. The capability of the AMSAC to perform its mitigative actuations is bypassed at a system level while in the test mode. Total system testing is performed as a set of three sequential, partial, overlapping tests. The first test checks the analog input portions of the AMSAC to verify accuracy. Each of the analog input modules is checked separately. The second test checks each ALP to verify that the appropriate coincidence logic is sent to the majority voter. Each ALP is tested separately. The last test exercises the majority voter and the integrity of the associated output relays. The majority voter and associated output relays are tested by exercising all possible input combinations to the majority voter. The integrity of each of the output relays is checked by confirming continuity of the relay coils without operating the relays. The capability to individually operate the output relays, confirm integrity of the associated field wiring, and operate the corresponding isolation relays and final actuation devices at plant shutdown is provided.

7.8.2.11 Inadvertent Actuation

The AMSAC has been designed such that the frequency of inadvertent actuations is minimized. This high reliability is ensured through use of three redundant ALPs and a majority voting module. A single failure in any of these modules will not result in a spurious AMSAC actuation. In addition, a three-out-of-four low steam generator level coincidence logic and a time delay have been selected to further minimize the potential for inadvertent actuations.

7.8.2.12 Maintenance Bypasses

The AMSAC is blocked at the system level during maintenance, repair, calibration, or test. While the system is blocked, the bypass condition is continuously indicated in the main control room.

7.8.2.13 Operating Bypasses

The AMSAC has been designed to allow for operational bypasses with inclusion of the C-20 permissive. Above the C-20 setpoint the AMSAC is automatically unblocked (i.e., armed); below the setpoint the system is automatically blocked. The operating status of the AMSAC is continuously indicated in the main control room via an annunciator window.

7.8.2.14 Indication of Bypasses

Whenever the mitigative capabilities of the AMSAC are bypassed or deliberately rendered inoperable, this condition is continuously indicated in the main control room. In addition to the

operating bypass, any manual maintenance bypass is indicated via the AMSAC general warning sent to the main control room.

7.8.2.15 Means for Bypassing

A permanently installed system bypass selector switch is provided to bypass the system. This is a two-position selector switch with "NORMAL" and "BYPASS" positions. At no time is it necessary to use any temporary means, such as installing jumpers or pulling fuses, to bypass the system.

7.8.2.16 Completion of Mitigative Actions Once Initiated

The AMSAC mitigative actions go to completion as long as the coincidence logic is satisfied and the time delay requirements are met. If the flow in the feedwater lines is reinitiated before the timer expires and the steam generator water level increases to above the low-low setpoint, then the coincidence logic will no longer be satisfied and the actuation signal will disappear. If the coincidence logic conditions are maintained for the duration of the time delay, then the mitigative actions go to completion. The auxiliary feedwater initiation signal is latched in at the component actuating devices, and the turbine trip is latched at the turbine electrohydraulic control system. Deliberate operator action is then necessary to terminate auxiliary feedwater flow, clear the turbine trip signal using the main control board turbine trip reset switch, and proceed with reopening of the turbine stop valves.

7.8.2.17 Manual Initiation

Manual initiation of the AMSAC is not provided. The capability to initiate the AMSAC mitigative functions manually, i.e., initiate auxiliary feedwater, trip the turbine, and isolate steam generator blowdown and sampling lines, exists at the main control board.

7.8.2.18 Information Readout

The AMSAC has been designed such that the operating and maintenance staffs have accurate, complete, and timely information pertinent to the status of the AMSAC. A system-level general warning alarm is indicated in the control room. Diagnostic capability exists from the test/maintenance panel to determine the cause of any unanticipated inoperability or deviation.

7.8.3 Compliance with Standards and Design Criteria

The AMSAC meets the applicable requirements of Part 50.62 of Title 10 of the Code of Federal Regulations and the quality assurance requirements of NRC Generic Letter 85-06. No other standards currently apply to the AMSAC.

7.9 Physical Separation and Electrical Isolation

7.9.1 Physical Separation

The separation criteria for Salem Generating Station Units 1 and 2 protection systems and equipment is based on IEEE Standard 279-1971, "Criteria for Protection Systems for Nuclear Power Generating Stations." The plant design predated Regulatory Guide 1.75, "Physical Independence of Electric Systems," therefore, strict compliance has not been required. Salem Station does not conform to Regulatory Guide 1.75 in the following areas:

1. Section 4.5 – Associated Circuits

   From Regulatory Guide 1.75:

   Associated circuits should comply with one of the following:

   a. they should be uniquely identified as such and should remain with or be separated the same as those Class IE circuits with which they are associated; they should be subject to all requirements placed on Class IE circuits such as cable derating, environmental qualifications, flame retardance, splicing restrictions, and raceway fill, unless it can be demonstrated that the absence of such requirements could not significantly reduce the availability of the Class IE circuits, or

   b. they should be in accordance with 4.5a from the Class IE equipment to and including an isolation device. Beyond the isolation device, a circuit is not subject to the requirements of this document provided it does not again become associated with a Class IE system, or

   c. they should be analyzed or tested to demonstrate that Class IE circuits are not degraded below an acceptable level.

   PSE&G's position:

   Non-safety related cables received a designation of E, F, G, or H for the following:

   a. All cables passing through the containment penetrations.

   b. All cables confined to (originating and terminating within) the control room, auxiliary equipment room (elev. 122), and relay room.

   c. All non-safety related cables fed from safety related power sources.

      E with B
      F with C
      G with D
      H with A

Cables may not cross safety related channels. When non-safety related cables leave vital trays, they may run together, provided they do not re-enter a safety related channel or violate an established practice.

2. Section 5.1.2 – Identification

   From Regulatory Guide 1.75:

   Exposed Class IE raceways should be marked in a distinct permanent manner at intervals not to exceed 15 feet and at points of entry to and exit from enclosed areas. Class IE raceways should be marked prior to the installation of their cables.

   PSE&G's position:

   One side of each tray shall be marked every thirty (30) feet, and on both sides at penetrations of walls, floors, etc.

3. Section 5.1.3 – Cable Spreading Area and Main Control Room

   From Regulatory Guide 1.75:

   The cable spreading area(s) is the space(s) adjacent to the control room where instrumentation and control cables converge prior to entering the control termination, or instrument panels. Where feasible, redundant cable spreading areas should be utilized.

   Power supply feeders to instrument and control room distribution panels should be installed in enclosed raceways that qualify as barriers. The minimum separation distance between redundant Class IE cable trays...should be one foot between trays separated horizontally and three feet between trays separated vertically.

   PSE&G's position:

   Salem Station does not have redundant cable spreading areas. The minimum separation distance at Salem Station is twelve (12) inches between trays separated horizontally and eighteen (18) inches between trays separated vertically.

4. Section 5.1.4 – General Plant Areas

   From Regulatory Guide 1.75:

   In plant areas from which potential hazards such as missiles, external fires, and pipe whip are excluded the minimum separation distance between redundant cable trays should be three feet between trays separated horizontally and five feet between trays separated vertically.

PSE&G's position:

The same separation criteria as in 3 above is applied throughout Salem Station Units 1 and 2.

5. Section 5.5 - Containment Electrical Penetrations

From Regulatory Guide 1.75:

Redundant Class IE containment electrical penetrations should be physically separated in accordance with the requirements of Section 4.0. Compliance with 4.0 will generally require that redundant penetrations be widely dispersed around the circumference of the containment. The minimum physical separation for redundant penetrations should meet the requirements for cables and raceways given in Section 4.5

PSE&G's position:

There are no physically separated containment penetrations.

7.9.2 Electrical Isolation

Electrical isolation for Class IE power circuits is directed by IEEE Standard 308-1971. Electrical isolation for Class IE instrumentation and control circuits is directed by IEEE Standard 279-1971. The requirement for isolation devices is that no credible failure at the output of an isolation device shall prevent the associated protection system channel from meeting the minimum performance requirement specified by the design basis.

7.10 Safety Parameter Display System (SPDS)

7.10.1 Functional Description

The Safety Parameter Display System (SPDS) serves as an aid to control room personnel in determining the safety status of the plant during abnormal and emergency conditions. The SPDS serves to concentrate a set of plant parameters to aid in assessing plant safety status without surveying the entire Control Room. The SPDS is based on the Safety Analysis Report provided in Reference 9. The requirements for SPDS are defined in Supplement 1 of NUREG-0737, NUREG-0696, and NUREG-0835.

The SPDS consists of seven (7) Safety Functions. A list of Supplement 1 of NUREG-0737 Safety Functions associated with Salem Safety Functions are in Table 7.10-2. One (1) of the Safety Functions, Radioactivity Control, is represented by the Radiation Monitoring displays.

Six (6) of the Safety Functions represent the Emergency Operating Procedures (EOP) Critical Safety Functions (CSF). The EOP CSF Status Trees were identified and developed based on the Westinghouse emergency response guidelines, Revision 1. The CSF Status Trees and the procedures associated with them are contained within the EOP set, which was also developed based on the Westinghouse Owners Group Emergency Response guidelines. For any transient or accident condition which results in a Reactor Trip, Safety Injection or Loss of all Offsite Power, the EOP will direct the operator to monitor the SPDS status trees. These status trees monitor plant conditions that relate directly to the barriers to prevent the release of fission products to the environment. These barriers are the fuel matrix and cladding, RCS pressure boundary and containment. The CSF associated with the barriers are listed in Table 7.10-3.

7.10.2 System Description

The Unit 1 and Unit 2 SPDSs are each redundant computer systems with monitors located in Units 1 and 2 Control Rooms respectively, Technical Support Center (TSC) and Emergency Operations Facility (EOF). The major components are as follows:

1. Four 1E multiplexer cabinets per unit
2. One Non-1E multiplexer cabinet per unit
3. Two data servers per unit
4. Two monitors per unit Control Room
5. Four monitors for TSC, common for both units
6. At least two monitors for EOF, common for both units
7. Two 40KVA Uninterruptible Power Systems

7.10.3 Computer Subsystem

Each computer subsystem utilizes two data servers in a redundant configuration. Each server acquires and processes the data from all multiplexers for that unit. One server is designated as the primary server.

7.10.4 Display Subsystem

The display subsystem provides the primary means of information presentation to the operator. Man-Machine Interface (MMI) considerations have been addressed by utilizing a monitor/keyboard configuration.

The SPDS consists of four (4) levels of dynamic displays. The Top Level display provides an overview of plant conditions in the form of seven (7) blocks representing each of the Safety Functions. The Second Level displays provide more detailed information in the form of status trees for the CSF and Emergency Action Limits (EAL) status for the Radiation Monitoring. The Third Level displays list the point parameters associated with the Safety Functions. The Fourth Level displays are trend plots.

7.10.4.1 Top Level Display

The Top Level display consists of seven (7) color bars representing the status of each Safety Function. The blocks change color depending on Status. The status colors in order of severity starting from the less severe are green, yellow, purple, and red, as defined in the EOP's. This display is duplicated in miniature form on the top of all SPDS displays.

The following is a list of the seven (7) Safety Functions for Salem Generating Station:

1. Shutdown Margin
2. Core Cooling
3. Heat Sink
4. Thermal Shock
5. Containment Environment
6. Coolant Inventory
7. Radiation Monitoring

7.10.4.2 Second Level Display

There is a Second Level display for each of the seven (7) Safety Functions.

Six (6) of the displays are based on the EOP CSF status trees. The seventh display is Radiation Monitoring which is based on the Event Classification Guides (ECG). The Radiation Monitoring display shows a message referring the user to the ECG. The Radiation Monitoring message is color coded as to the severity level as defined in the EOP.

7.10.4.3 Third Level Display

For each Safety Function, there is a Third Level display. This display consists of the following information:

Point Identification

Point Description

Point Value with Engineering Units

Quality of Point

7.10.4.4 Fourth Level Display

For each Safety Function, there is a Fourth Level display of two (2) dynamic trend plots. The two (2) trend plots (one parameter per plot) show the previous 30 minutes of data.

7.10.5 Human Factors

Accepted Human Factors Principles are incorporated in the design of the SPDS so that the displayed information can be readily perceived and comprehended by SPDS users. The guidelines of the reference documents listed in section 7.10.9 were used to ensure adequate Human Factors were incorporated into the SPDS design.

7.10.6 Isolation

The Data Acquisition System consists of five (5) multiplexer cabinets per Unit and is configured to meet redundancy requirements. Four (4) of the cabinets are 1E which are physically separated and the one (1) dual cabinet is Non-1E. All 1E field signals are isolated at the 1E multiplexer cabinets. The signals from these cabinets are transmitted to the data server by means of fiber optic cables. These cables isolate the multiplexer cabinets from the data server and the rest of the system.

7.10.7 Parameter Selection

The parameters that make up the database for the Safety Parameter Display System were selected using Regulatory Guide 1.97 as a guideline. These parameters are listed on Tables 7.10.1. A subset of these parameters are used in the status trees.

7.10.8 Data Validation

Signal validation is accomplished by the software by inputting sets of redundant database variables.

The software sets a "non-valid" signal indicator in the database when it determines that a measurement is not consistent with a subset of its redundant measurements. Six (6) SPDS parameters are validated using this method because of the availability of redundant sensors. The parameters are as follows:

1. RCS pressure
2. Containment pressure
3. Containment sump water level
4. Pressurizer level
5. Steam generator pressures
6. Power range power levels

The remaining parameters which are directly related to the CSF Status Trees and the Radiation Monitoring displays can not be validated by the above method because of the unavailability of redundant sensors. However, range and limit checks are performed and quality flags are generated for all parameters in the database.

7.10.9 References

1. Regulatory Guide 1.97, "Instrumentation for Light-Water-Cooled Nuclear Power Plants and Environs Conditions During and Following an Accident."

2. NUREG-0700, Section 6, "Guidelines for Control Room Design Reviews."

3. NUREG-0835, Section 6, "Human Factors Acceptance Criteria for the Safety Parameter Display System."

4. INPO 83-036, "Human Engineering Principles for Control Room Design Review", Section 3.7, Published by the Nuclear Utility Task Action Committee.

5. GP-R-211010, (Revised) "Human Factors SPDS Guidelines Checklist", prepared by General Physics Corporation for PSE&G, August 8, 1985.

6. NUREG-0737, Supplement 1, "Clarification of TMI Action Plan Requirements, Requirements for Emergency Response Capability".

7. NUREG-1342, "Status Report Regarding Industry Implementation of Safety Parameter Display System".

8. NUREG-0696, "Functional Criteria for Emergency Response Facilities".

9. PSE&G Letter NLR-N87058 dated April 20, 1987, C.A. McNeill, Jr., to NRC Document Control Desk.

1. Neutron Flux - Source, Power, Intermediate Ranges, and Start-up rate
2. Control Rod Positions
3. Plant Vent Flow
4. RCS Cold Leg Water Temperature
5. RCS Hot Leg Water Temperature
6. RCS Pressure
7. Core Exit Temperature
8. Coolant Level in Reactor
9. Degrees of Subcooling
10. Containment Sump Water Level
11. Containment Pressure (Wide and Narrow Range)
12. Containment Isolation Valve Position (excluding check valves)
13. Containment Area Radiation
14. Containment Hydrogen Concentration
15. Containment Effluent Radioactivity (Noble Gases) from Identified Release Points
16. RHR System Flow
17. RHR Heat Exchanger Outlet Temperature
18. Accumulator Tank Level and Pressure
19. Accumulator Isolation Valve Position
20. Boric Acid Charging Flow
21. Charging Pumps Discharge Flow
22. Safety Injection Pumps Discharge Flow
23. Refueling Water Storage Tank Level
24. Reactor Coolant Pump Status (AMPS)
25. Primary System Safety/Relief Valve Position
26. Pressurizer Level
27. Pressurizer Heater Status (AMPS)
28. Pressurizer Relief Tank Level
29. Pressurizer Relief Tank Temperature
30. Pressurizer Relief Tank Pressure
31. Steam Generator Level
32. Steam Generator Pressure
33. Main Steam Flow
34. Main Feedwater Flow
35. Auxiliary Feedwater Flow
36. Auxiliary Feedwater Storage Tank Level
37. Containment Spray Flow Additive Rate

38. Heat Removal by the Containment Fan Coil Units (CFCU's) (CFCU Outlet Flow and CFCU Running)
39. Containment Atmosphere Temperature
40. Letdown Flow
41. Volume Control Tank Level
42. Component Cooling Water Temperature
43. Component Cooling Water Flow
44. High Level Radioactive Liquid Tanks Levels
    a. Holdup Tanks
    b. Auxiliary Building Sump Tank
    c. Waste Monitor Holdup Tank
    d. Waste Holdup Tanks
    e. Reactor Coolant Drain Tank
45. Radioactive Gas Hold Up Tank Pressure
46. Control Room Emergency Ventilation Damper Position
47. Auxiliary Building Emergency Damper Position
48. Fuel Handling Building Emergency Damper Position
49. Status of Standby Power and Other Emergency Power Sources Important to Safety
50. Control Air Pressure
51. Main Steam Radiation
52. Condenser Availability (Condenser Vacuum and Circulator Amperes)
53. RCS Average Loop Temperature
54. Main Steam Isolation Valve Position
55. Reactor Trip Demand Signal from Train "A"
56. Reactor Trip Demand Signal from Train "B"
57. Auxiliary Building Roof Radiation Monitor

Safety Function NUREG-0737 Supplement 1	Safety Function Status Tree	Parameters
Reactivity Control	Shut Down Margin	1. Neutron Flux 2. Reactor Trip
Reactor Core Cooling and Heat Removal from the Primary System	Core Cooling	1. Core Exit Temperature 2. Degrees of Subcooling 3. Reactor Coolant Pump Status 4. Reactor Vessel Level 5. Hot Leg Temperature 6. Cold Leg Temperature 7. Steam Generator Level 8. Steam Generator Pressure 9. RHR Flow 10. RCS Pressure 11. Containment Pressure 12. Containment Area Radiation
Reactor Coolant	Heat Sink	1. Steam Generator Level 2. Steam Generator Pressure 3. Auxiliary Feedwater Flow 4. Cold Leg Temperature 5. Main Feedwater Flow
	Thermal Shock	6. RCS Pressure 7. RCS Cold Leg Water Temperature
	Coolant Inventory	8. Pressurizer Level 9. Reactor Vessel Level 10. Reactor Coolant Pump Status 11. Containment Sump Level 12. Pressurizer Temperature
Radioactivity Control	Radiation Monitoring	1. Containment Particulate Radiation 2. Plant Vent Particulate Radiation 3. Containment Radiation 4. Main Steam Radiation 5. Roof Monitor
Containment Conditions	Containment Environment	1. Containment Sump Water Level 2. Containment Pressure 3. Containment Area Radiation 4. Containment Hydrogen

Barrier	Critical Safety Functions
1. Fuel Matrix and Fuel Clad	a. Maintenance of SUBCRITICALITY (minimize energy production in the fuel) b. Maintenance of a CORE COOLING (provide adequate reactor coolant for heat removal from the fuel) c. Maintenance of a HEAT SINK (provide adequate secondary coolant for heat removal from the fuel) d. Control of Reactor Coolant INVENTORY (maintain enough reactor coolant for effective heat removal and pressure control)
2. Reactor Coolant System Pressure	a. Maintenance of a HEAT SINK (provide adequate heat removal from the RCS) b. Maintenance of Reactor Coolant System INTEGRITY (prevent failure of RCS) c. Control of Reactor Coolant INVENTORY (prevent flooding and loss of pressure control)
3. Containment Vessel	d. Maintenance of CONTAINMENT Integrity (prevent failure of containment vessel)

7A PROGRAM ELEMENT DESCRIPTIONS RESULTING FROM THE IMPLEMENTATION OF THE MAY 6, 1983 ORDER

Subject: Reactor Trip Breaker ATWS Event

7A.1 Introduction

On May 6, 1983, the Nuclear Regulatory Commission issued an Order modifying the operating license for the Salem Generating Station, Units 1 and 2. The Order referenced a series of letters in which PSE&G had submitted its corrective action program in response to the reactor trip breaker failures. This corrective action program included short term, interim and long term actions. Corrective actions were also identified to the NRC in response to Generic Letter 83-28.

Subsequently, the Order was modified by letter dated January 31, 1984 changing the implementation schedule for certain long term actions, and again on March 18, 1986, removing the requirement to submit Nuclear Oversight Committee reports on a quarterly basis. The March 18, 1986 letter also stated that the terms of the Order have been satisfactorily completed. The long term corrective actions implemented in response to this event will continue to be maintained as required by the Order. (Refer to NRC letter dated June 12, 1992.) These actions are provided in the following Sections:

7A.2 Training

1. The difference between demand and confirmatory indications for the Reactor Protection System (RPS) shall be an integral part of initial and re-qualification training for all licensed operators.

2. The procedural steps to be taken in response to an ATWS event shall be an integral part of simulator training for all licensed operators.

3. Identifying the location and type of RPS indicators and alarms shall be an integral part of simulator training for all licensed operators.

4. First-line supervisory training will be provided to all individuals, except licensed operators, within 12 months of their assumption of supervisory duties within the station. Individuals filling positions that require the acquisition of a Senior Reactor Operator (SRO) license will complete the program within 12 months of the NRC examination date. This permits them the same time allowance for program completion as the remaining supervisory classifications while allowing them time to complete license training.

5. Technical training will be provided to support the professional staff not in station positions.

6. A formal training program will be provided for senior level supervisory personnel. This program shall also offer refresher/requalification training for management and senior supervisory personnel.

7. First-line supervisory training will address the classification of procurement documents as well as the initiation, classification, processing and closeout of work orders with emphasis on QA requirements, test/retest requirements and interdepartmental coordination.

7A.3 Procurement and Management

1. The procurement specification for reactor trip breakers shall require:

   All undervoltage trip attachments (UTAs) have incorporated all design changes identified in Westinghouse Switchgear Division Procedure NCD-ELEC 18.

   All UTAs to be lubricated per Westinghouse Technical Bulletin NSD-TB-83-02.

   The manufacturer to mount on a test breaker and electrically test each UTA twenty-five (25) consecutive times without failure.

   The manufacturer to seal the two (2) cover bolts on the moveable core cover and the reset lever spring adjustment screw such that future removal of cover bolts or future screw adjustment is detectable.

   The manufacturer to submit a Certificate of Conformance documenting the above items.

2. The procurement program will require item classifications by procurement engineering personnel with independent technical verification (peer review) for Important to Safety and augmented quality applications performed by qualified personnel.

3. Nuclear Oversight (NOS) personnel will conduct periodic audits of the procurement program to ensure proper item classification, application of procurement procedures and practices, as well as, to verify procedural adherence by appropriate personnel.

4. On a sample basis, NOS shall perform a detailed review of safety/non-safety related work orders to assure compliance to program requirements such as proper classification, etc.

5. A member of the Independent Safety Engineering Group (Safety Review Group) will serve on the Station Operations Review Committee (SORC). The Safety Review Group was subsequently replaced by an Onsite Independent Review function performed by the NOS organization. NRC approval was documented in SER dated March 21, 1997.

6. PSEG Nuclear will establish a Nuclear Review Board (NRB) to provide management with an independent basis for evaluating the effectiveness of nuclear safety. The committee should consist of at least 5 members and shall consist of nuclear utility operations executives, former regulators and internal management.

7. The NRB shall submit reports to the President and Chief Nuclear Officer following each quarterly meeting. The reports shall include an evaluation of overall management attention to nuclear safety. NRB meeting frequency was subsequently revised to a minimum of twice a year. NRC approval was documented in SER dated March 21, 1997.

7A.4 Operating Procedures

1. All procedures associated with a reactor trip have been revised to require the operator to manually trip the reactor anytime he receives a demand first out annunciator and verification of this condition on the Reactor Protection Status Panel.

2. The Shift Routine Logs shall require that an Overhead Annunciator Control console and Status Panel Alarm/Indicator Check be performed at the beginning of each shift.

3. A dedicated communicator shall be assigned to each shift.

4. The directive utilized by the Operations Department to verify operability of safety related equipment shall require that testing in accordance with the Technical Specifications is completed prior to declaring equipment operable.

5. Maintain program for completion of Post-Trip reviews.

7A.5 Maintenance and Surveillance

1. PSEG Nuclear has established a program to provide traceability on the reactor trip breakers. This program ensures traceability on all the work to a particular breaker and its location.

2. Cleaning of the breakers and Westinghouse recommended lubrication is performed on the undervoltage trip attachments (UTA) during periodic maintenance.

3. Cleaning of the breaker cabinets is performed during scheduled maintenance. The circuit breaker rooms are cleaned by a custodian on normal work days.

4. The maintenance procedure incorporates a range of acceptable dropout voltages and instruction to replace any devices which fall outside the specified range. In addition, new UTAs installed in the plant will be tested 10 times with a 30 minute interval between each test and any devices which fail will be rejected.

5. The following tests will be performed before and after the periodic maintenance:

   - 3 UTA trip timing tests

   - 3 shunt trip tests, and

   - 3 closure timing tests.

6. A bar force (static trip) measurement and an output force (added weight) measurement will be performed after periodic testing and after UTA replacement.

7. The commitment for NRC notification is addressed by notation to Table 3.3-1 of the Salem Technical Specifications.

8. Surveillance testing of the main reactor trip breakers utilizing the UTA has been increased to a frequency specified in Technical Specification surveillance requirement 4.3.1.1.1.

9. Surveillance testing of the main and bypass reactor trip breakers utilizing the shunt trip will be performed on a frequency specified in Technical Specification surveillance requirement 4.3.1.1.1.

10. Surveillance testing utilized to prove operability of the reactor trip breakers on a frequency specified in Technical Specification surveillance requirement 4.3.1.1.1 will provide for independent testing of the shunt and undervoltage attachments and operation of the breakers utilizing the manual trip switches.

11. Modifications to I&C procedures which are to be performed on a frequency specified in Technical Specification surveillance requirement 4.3.1.1.1, have been made to provide for the utilization of the Sequence of Events recorder to monitor the response time of the main trip breakers for the Solid State Protection System. This data will be recorded as part of these procedures. Included in these procedures will be specific acceptance criteria requiring that if exceeded, the NRC will be notified (amendment 114/96).

12. In addition, I&C procedures have been modified to include time response testing of both the main and bypass reactor trip breakers. This surveillance testing will continue to be performed on an 18 month interval prior to restart after refueling.

7A.6 Control of Vendor Technical Documents

PSEG Nuclear shall establish a Vendor Technical Document Control Program that includes the following elements:

1. Procedures regarding control of vendor manuals.

2. Review of vendor manuals by engineering personnel to determine applicability to installed equipment.

3. Identification of manuals applicable to Q-listed equipment.

4. Requirement that all safety related vendor manuals be incorporated under the Vendor Technical Document Control Program. NOTE: Only key safety-related vendor manuals will be included as part of the Vendor Re-Contact Program.

5. Deleted.

6. Review of manual revisions and new manual issues by engineering personnel to ensure incorporation of applicable new information into applicable procedures.

7. Deleted.

8. Establish and maintain an interface program with NSSS vendors and other vendors of key safety-related components to assure receipt of the most recent applicable information that includes the following:

    1. Establish and maintain information update programs with key vendors such as Westinghouse, ALCO (Diesel Mfr.), General Electric, etc.

    2. Participate in the INPO EPIX program.

    3. Establish a focal point within the Nuclear Department for receiving and processing all uncontrolled vendor technical information received on-site for the Salem Units.