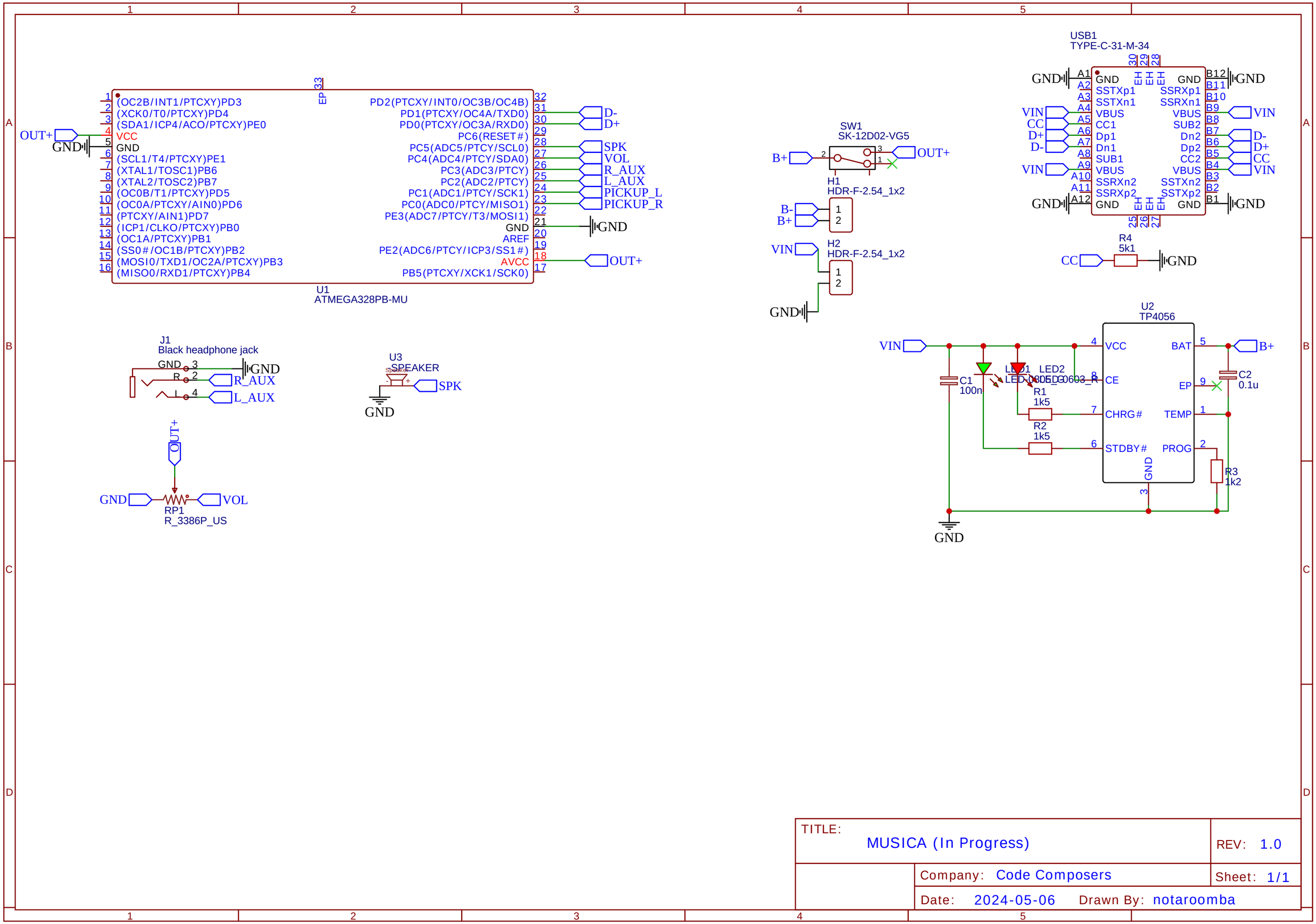

TITLE: MUSICA (In Progress)		REV: 1.0
	Company: Code Composers	Sheet: 1/1
	Date: 2024-05-06 Drawn By: notaroomba	