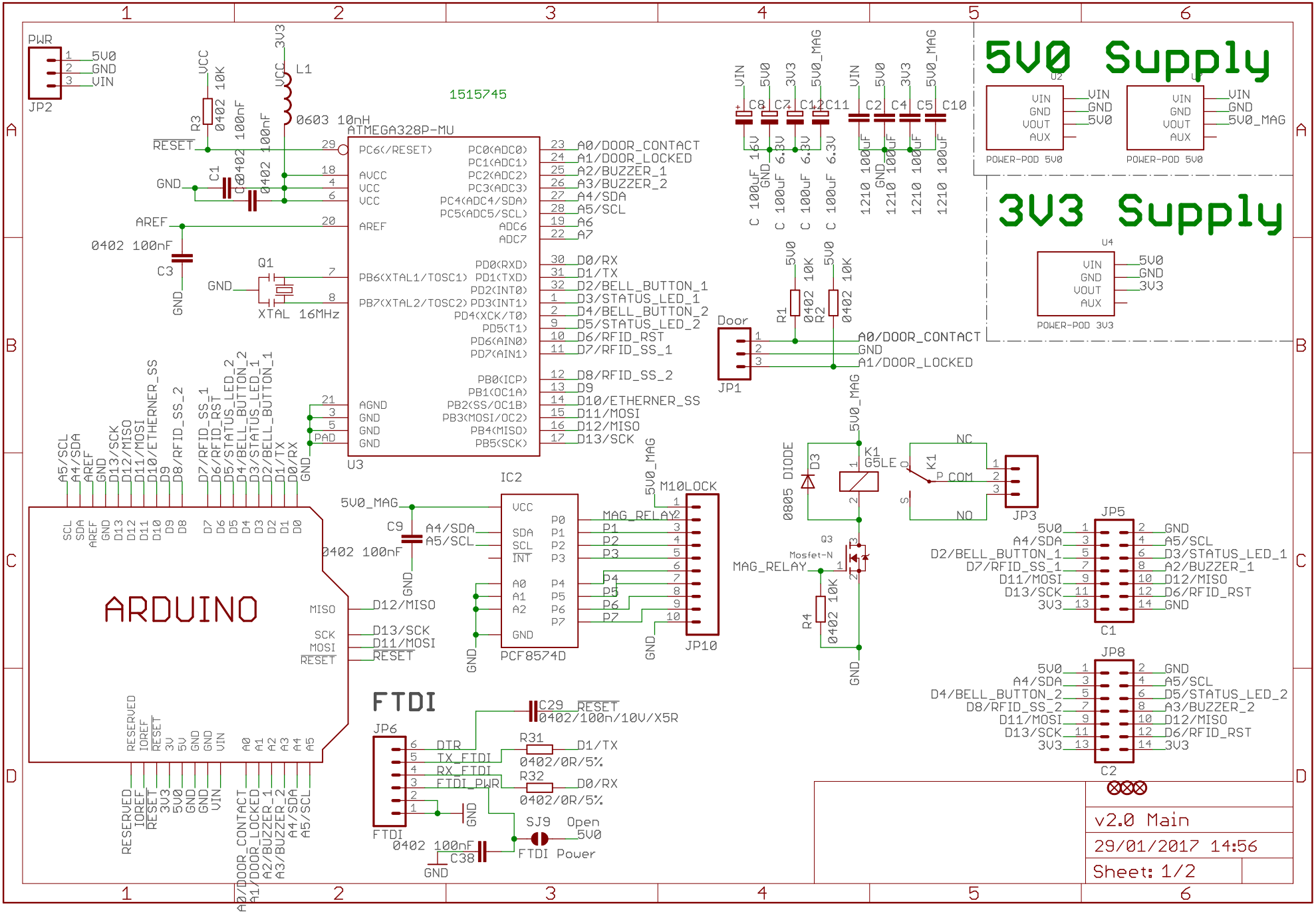
5V0 Supply
3V3 Supply
ARDUINO
FTDI
ATMEGA328P-MU
1515745
U3
PWR
JP2
L1
0603 10nH
XTAL 16MHz
Q1
Door
JP1
K1
G5LE
D3
0805 DIODE
Q3
Mosfet-N
JP3
JP5
C1
JP8
C2
IC2
PCF8574D
M10LOCK
JP10
JP6
FTDI
SJ9
Open
FTDI Power
POWER-POD 5V0
POWER-POD 3V3
v2.0 Main
29/01/2017 14:56
Sheet: 1/2