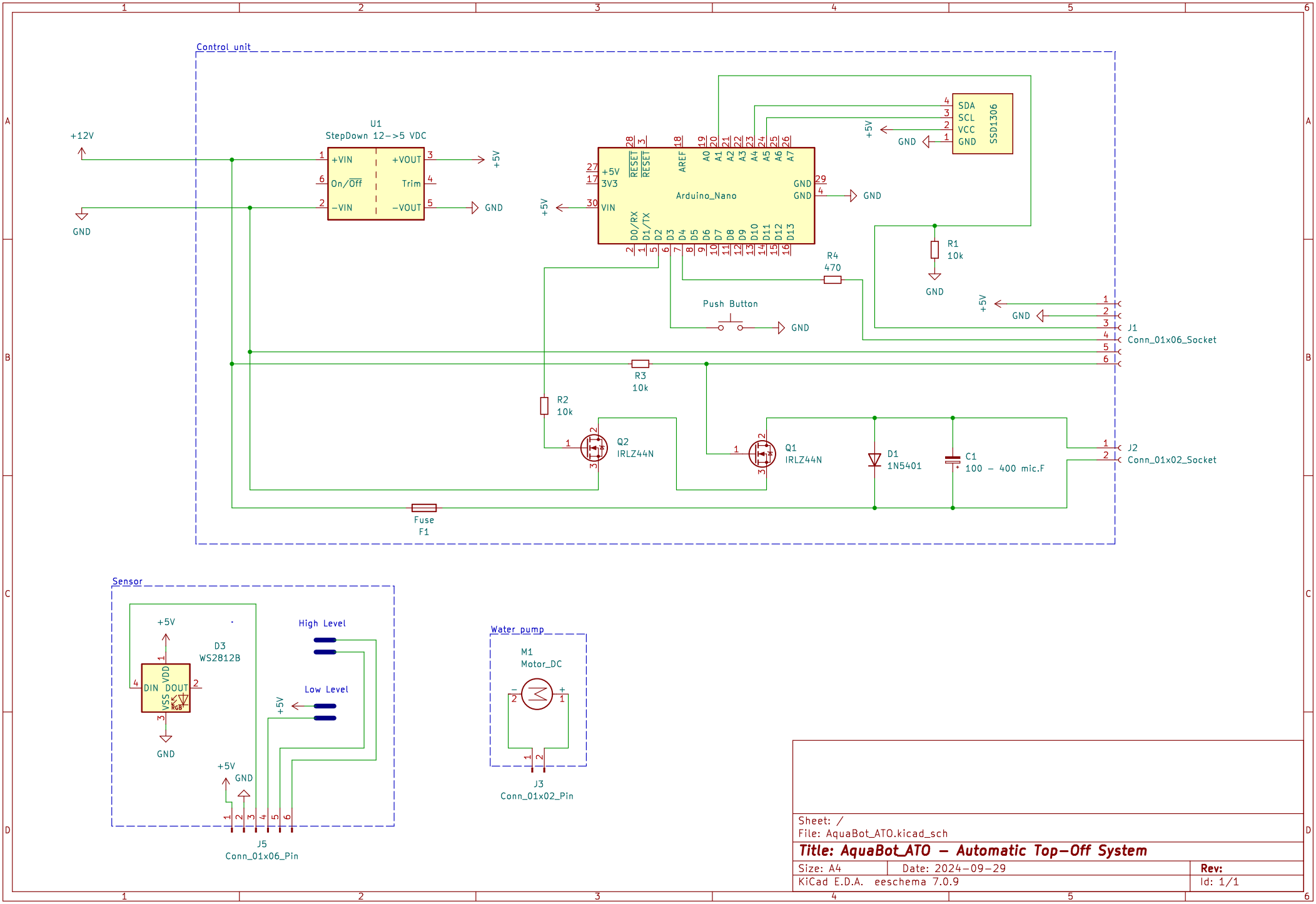
Control unit
+12V
GND
U1
StepDown 12->5 VDC
+VIN
On/Off
-VIN
+VOUT
Trim
-VOUT
+5V
GND
Arduino_Nano
+5V
3V3
VIN
RESET
RESET
AREF
GND
GND
SDA
SCL
VCC
GND
SSD1306
R1
10k
R4
470
Push Button
J1
Conn_01x06_Socket
R3
10k
R2
10k
Q2
IRLZ44N
Q1
IRLZ44N
D1
1N5401
C1
100 - 400 mic.F
J2
Conn_01x02_Socket
Fuse
F1
Sensor
D3
WS2812B
DIN
DOUT
VDD
VSS
High Level
Low Level
J5
Conn_01x06_Pin
Water pump
M1
Motor_DC
J3
Conn_01x02_Pin
Sheet: /
File: AquaBot_ATO.kicad_sch
Title: AquaBot_ATO - Automatic Top-Off System
Size: A4
Date: 2024-09-29
Rev:
KiCad E.D.A. eeschema 7.0.9
Id: 1/1