PIC18(L)F2X/4XK22

28/40/44-Pin, Low-Power, High-Performance Microcontrollers with XLP Technology

High-Performance RISC CPU:

- C Compiler Optimized Architecture:
  - Optional extended instruction set designed to optimize re-entrant code
- Up to 1024 Bytes Data EEPROM
- Up to 64 Kbytes Linear Program Memory Addressing
- Up to 3896 Bytes Linear Data Memory Addressing
- Up to 16 MIPS Operation
- 16-bit Wide Instructions, 8-bit Wide Data Path
- Priority Levels for Interrupts
- 31-Level, Software Accessible Hardware Stack
- 8 x 8 Single-Cycle Hardware Multiplier

Flexible Oscillator Structure:

- Precision 16 MHz Internal Oscillator Block:
  - Factory calibrated to ± 1%
  - Selectable frequencies, 31 kHz to 16 MHz
  - 64 MHz performance available using PLL – no external components required
- Four Crystal modes up to 64 MHz
- Two External Clock modes up to 64 MHz
- 4X Phase Lock Loop (PLL)
- Secondary Oscillator using Timer1 @ 32 kHz
- Fail-Safe Clock Monitor:
  - Allows for safe shutdown if peripheral clock stops
  - Two-Speed Oscillator Start-up

Analog Features:

- Analog-to-Digital Converter (ADC) module:
  - 10-bit resolution, up to 30 external channels
  - Auto-acquisition capability
  - Conversion available during Sleep
  - Fixed Voltage Reference (FVR) channel
  - Independent input multiplexing
- Analog Comparator module:
  - Two rail-to-rail analog comparators
  - Independent input multiplexing
- Digital-to-Analog Converter (DAC) module:
  - Fixed Voltage Reference (FVR) with 1.024V, 2.048V and 4.096V output levels
  - 5-bit rail-to-rail resistive DAC with positive and negative reference selection
- Charge Time Measurement Unit (CTMU) module:
  - Supports capacitive touch sensing for touch screens and capacitive switches

eXtreme Low-Power Features (XLP) (PIC18(L)F2X/4XK22):

- Sleep mode: 20 nA, typical
- Watchdog Timer: 300 nA, typical
- Timer1 Oscillator: 800 nA @ 32 kHz
- Peripheral Module Disable

Special Microcontroller Features:

- 2.3V to 5.5V Operation – PIC18FXXK22 devices
- 1.8V to 3.6V Operation – PIC18LFXXK22 devices
- Self-Programmable under Software Control
- High/Low-Voltage Detection (HLVD) module:
  - Programmable 16-Level
  - Interrupt on High/Low-Voltage Detection
- Programmable Brown-out Reset (BOR):
  - With software enable option
  - Configurable shutdown in Sleep
- Extended Watchdog Timer (WDT):
  - Programmable period from 4 ms to 131s
- In-Circuit Serial Programming™ (ICSP™):
  - Single-Supply 3V
- In-Circuit Debug (ICD)

Peripheral Highlights:

- Up to 35 I/O Pins plus 1 Input-Only Pin:
  - High-Current Sink/Source 25 mA/25 mA
  - Three programmable external interrupts
  - Four programmable interrupt-on-change
  - Nine programmable weak pull-ups
  - Programmable slew rate
- SR Latch:
  - Multiple Set/Reset input options
- Two Capture/Compare/PWM (CCP) modules
- Three Enhanced CCP (ECCP) modules:
  - One, two or four PWM outputs
  - Selectable polarity
  - Programmable dead time
  - Auto-Shutdown and Auto-Restart
  - PWM steering
- Two Master Synchronous Serial Port (MSSP) modules:
  - 3-wire SPI (supports all 4 modes)
  - I^2C Master and Slave modes with address mask

© 2010-2016 Microchip Technology Inc.

- Two Enhanced Universal Synchronous Asynchronous Receiver Transmitter (EUSART) modules:
  - Supports RS-485, RS-232 and LIN
  - RS-232 operation using internal oscillator
  - Auto-Wake-up on Break
  - Auto-Baud Detect

TABLE 1: PIC18(L)F2X/4XK22 FAMILY TYPES

Device	Program Memory		Data Memory		I/O(1)	10-bit A/D Channels(2)	CCP	ECCP (Full-Bridge)	ECCP (Half-Bridge)	MSSP		EUSART	Comparator	CTMU	BOR/LVD	SR Latch	8-bit Timer	16-bit Timer
	Flash (Bytes)	# Single-Word Instructions	SRAM (Bytes)	EEPROM (Bytes)						SPI	I^2C							
PIC18(L)F23K22	8K	4096	512	256	25	19	2	1	2	2	2	2	2	Y	Y	Y	3	4
PIC18(L)F24K22	16K	8192	768	256	25	19	2	1	2	2	2	2	2	Y	Y	Y	3	4
PIC18(L)F25K22	32K	16384	1536	256	25	19	2	1	2	2	2	2	2	Y	Y	Y	3	4
PIC18(L)F26K22	64k	32768	3896	1024	25	19	2	1	2	2	2	2	2	Y	Y	Y	3	4
PIC18(L)F43K22	8K	4096	512	256	36	30	2	2	1	2	2	2	2	Y	Y	Y	3	4
PIC18(L)F44K22	16K	8192	768	256	36	30	2	2	1	2	2	2	2	Y	Y	Y	3	4
PIC18(L)F45K22	32K	16384	1536	256	36	30	2	2	1	2	2	2	2	Y	Y	Y	3	4
PIC18(L)F46K22	64k	32768	3896	1024	36	30	2	2	1	2	2	2	2	Y	Y	Y	3	4

Note 1: One pin is input only.

2: Channel count includes internal FVR and DAC channels.

© 2010-2016 Microchip Technology Inc.

FIGURE 1: 28-PIN PDIP, SOIC, SSOP DIAGRAM

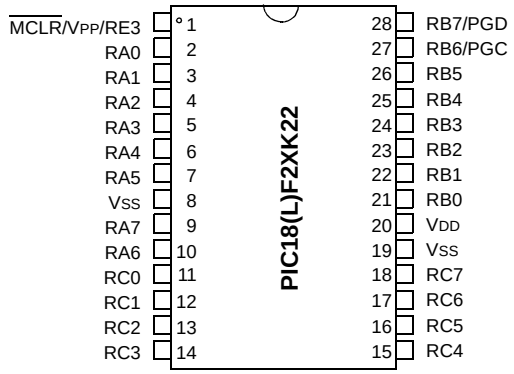

FIGURE 2: 28-PIN QFN, UQFN(1) DIAGRAM

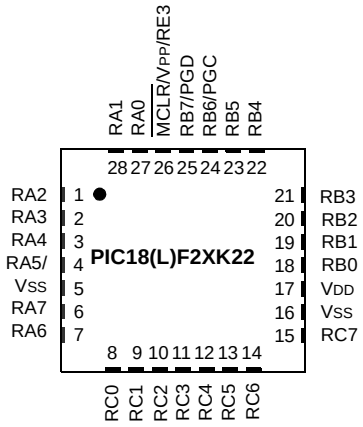

Note 1: The 28-pin UQFN package is available only for PIC18(L)F23K22 and PIC18(L)F24K22.

FIGURE 3: 40-PIN PDIP DIAGRAM

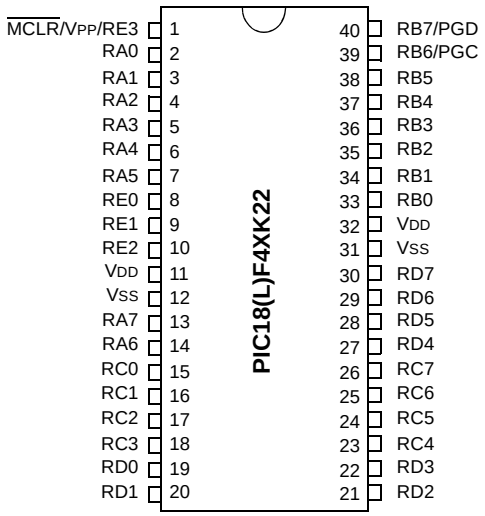

FIGURE 4: 40-PIN UQFN DIAGRAM

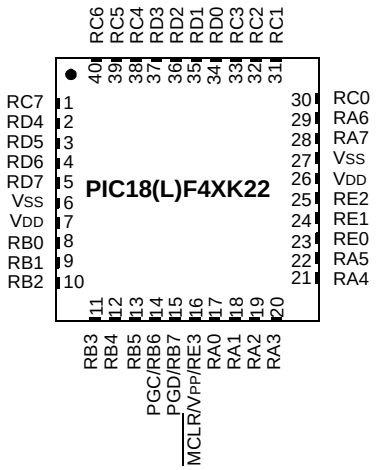

© 2010-2016 Microchip Technology Inc.

FIGURE 5: 44-PIN TQFP DIAGRAM

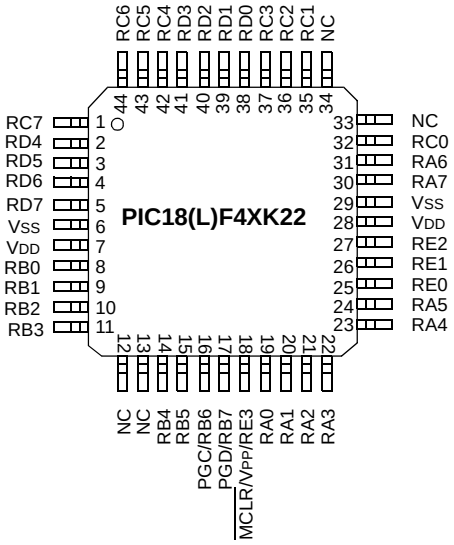

FIGURE 6: 44-PIN QFN DIAGRAM

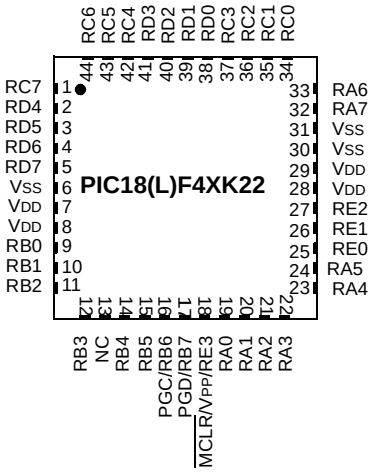

TABLE 2: PIC18(L)F2XK22 PIN SUMMARY

28-SSOP, SOIC 28-SPDIP	28-QFN, UQFN	I/O	Analog	Comparator	CTMU	SR Latch	Reference	(E)CCP	EUSART	MSSP	Timers	Interrupts	Pull-up	Basic
2	27	RA0	AN0	C12IN0-										
3	28	RA1	AN1	C12IN1-										
4	1	RA2	AN2	C2IN+			VREF- DACOUT							
5	2	RA3	AN3	C1IN+			VREF+							
6	3	RA4		C1OUT		SRQ		CCP5			T0CKI			
7	4	RA5	AN4	C2OUT		SRNQ	HLVDIN			$\overline{SS}$1				
10	7	RA6												OSC2 CLKO
9	6	RA7												OSC1 CLKI
21	18	RB0	AN12			SRI		CCP4 FLT0		$\overline{SS}$2		INT0	Y	
22	19	RB1	AN10	C12IN3-				P1C		SCK2 SCL2		INT1	Y	
23	20	RB2	AN8		CTED1			P1B		SDI2 SDA2		INT2	Y	
24	21	RB3	AN9	C12IN2-	CTED2			CCP2 P2A(1)		SDO2			Y	
25	22	RB4	AN11					P1D			T5G	IOC	Y	
26	23	RB5	AN13					CCP3 P3A(4) P2B(3)			T1G T3CKI(2)	IOC	Y	
27	24	RB6							TX2/CK2			IOC	Y	PGC
28	25	RB7							RX2/DT2			IOC	Y	PGD
11	8	RC0						P2B(3)			SOSCO T1CKI T3CKI(2) T3G			
12	9	RC1						CCP2 P2A(1)			SOSCI			
13	10	RC2	AN14		CTPLS			CCP1 P1A			T5CKI			
14	11	RC3	AN15							SCK1 SCL1				
15	12	RC4	AN16							SDI1 SDA1				
16	13	RC5	AN17							SDO1				
17	14	RC6	AN18					CCP3 P3A(4)	TX1/CK1					
18	15	RC7	AN19					P3B	RX1/DT1					
1	26	RE3												$\overline{MCLR}$ VPP
8, 19 19	5, 16 16	VSS												VSS
20	17	VDD												VDD

Note 1: CCP2/P2A multiplexed in fuses.
2: T3CKI multiplexed in fuses.
3: P2B multiplexed in fuses.
4: CCP3/P3A multiplexed in fuses.

© 2010-2016 Microchip Technology Inc.

TABLE 3: PIC18(L)F4XK22 PIN SUMMARY

40-PDIP	40-UQFN	44-TQFP	44-QFN	I/O	Analog	Comparator	CTMU	SR Latch	Reference	(E)CCP	EUSART	MSSP	Timers	Interrupts	Pull-up	Basic
2	17	19	19	RA0	AN0	C12IN0-										
3	18	20	20	RA1	AN1	C12IN1-										
4	19	21	21	RA2	AN2	C2IN+			VREF- DACOUT							
5	20	22	22	RA3	AN3	C1IN+			VREF+							
6	21	23	23	RA4		C1OUT		SRQ					T0CKI			
7	22	24	24	RA5	AN4	C2OUT		SRNQ	HLVDIN			$\overline{SS}$1				
14	29	31	33	RA6												OSC2 CLKO
13	28	30	32	RA7												OSC1 CLKI
33	8	8	9	RB0	AN12			SRI		FLT0				INT0	Y	
34	9	9	10	RB1	AN10	C12IN3-								INT1	Y	
35	10	10	11	RB2	AN8		CTED1							INT2	Y	
36	11	11	12	RB3	AN9	C12IN2-	CTED2			CCP2 P2A(1)					Y	
37	12	14	14	RB4	AN11								T5G	IOC	Y	
38	13	15	15	RB5	AN13					CCP3 P3A(3)			T1G T3CKI(2)	IOC	Y	
39	14	16	16	RB6										IOC	Y	PGC
40	15	17	17	RB7										IOC	Y	PGD
15	30	32	34	RC0						P2B(4)			SOSCO T1CKI T3CKI(2) T3G			
16	31	35	35	RC1						CCP2(1) P2A			SOSCI			
17	32	36	36	RC2	AN14		CTPLS			CCP1 P1A			T5CKI			
18	33	37	37	RC3	AN15							SCK1 SCL1				
23	38	42	42	RC4	AN16							SDI1 SDA1				
24	39	43	43	RC5	AN17							SDO1				
25	40	44	44	RC6	AN18						TX1 CK1					
26	1	1	1	RC7	AN19						RX1 DT1					
19	34	38	38	RD0	AN20							SCK2 SCL2				
20	35	39	39	RD1	AN21					CCP4		SDI2 SDA2				
21	36	40	40	RD2	AN22					P2B(4)						
22	37	41	41	RD3	AN23					P2C		$\overline{SS}$2				
27	2	2	2	RD4	AN24					P2D		SD02				
28	3	3	3	RD5	AN25					P1B						
29	4	4	4	RD6	AN26					P1C	TX2 CK2					
30	5	5	5	RD7	AN27					P1D	RX2 DT2					
8	23	25	25	RE0	AN5					CCP3 P3A(3)						

Note 1: CCP2 multiplexed in fuses.
2: T3CKI multiplexed in fuses.
3: CCP3/P3A multiplexed in fuses.
4: P2B multiplexed in fuses.

TABLE 3: PIC18(L)F4XK22 PIN SUMMARY (CONTINUED)

40-PDIP	40-UQFN	44-TQFP	44-QFN	I/O	Analog	Comparator	CTMU	SR Latch	Reference	(E)CCP	EUSART	MSSP	Timers	Interrupts	Pull-up	Basic
9	24	26	26	RE1	AN6					P3B						
10	25	27	27	RE2	AN7					CCP5						
1	16	18	18	RE3											Y	$\overline{\text{MCLR}}$ V_{PP}
11, 32	7, 26	7, 28	7,8 28, 29	V_{DD}												V_{DD}
12, 31	6, 27	6, 29	6, 30, 31	V_{SS}												V_{SS}
—	—	12, 13 33, 34	13	NC												

Note 1: CCP2 multiplexed in fuses.
2: T3CKI multiplexed in fuses.
3: CCP3/P3A multiplexed in fuses.
4: P2B multiplexed in fuses.

© 2010-2016 Microchip Technology Inc.

Table of Contents

1.0 Device Overview 11
2.0 Oscillator Module (With Fail-Safe Clock Monitor)) 25
3.0 Power-Managed Modes 44
4.0 Reset 55
5.0 Memory Organization 64
6.0 Flash Program Memory 90
7.0 Data EEPROM Memory 99
8.0 8 x 8 Hardware Multiplier 104
9.0 Interrupts 106
10.0 I/O Ports 127
11.0 Timer0 Module 154
12.0 Timer1/3/5 Module with Gate Control 157
13.0 Timer2/4/6 Module 169
14.0 Capture/Compare/PWM Modules 173
15.0 Master Synchronous Serial Port (MSSP1 and MSSP2) Module 204
16.0 Enhanced Universal Synchronous Asynchronous Receiver Transmitter (EUSART) 259
17.0 Analog-to-Digital Converter (ADC) Module 288
18.0 Comparator Module 302
19.0 Charge Time Measurement Unit (CTMU) 311
20.0 SR LATCH 326
21.0 Fixed Voltage Reference (FVR) 331
22.0 Digital-to-Analog Converter (DAC) Module 333
23.0 High/Low-Voltage Detect (HLVD) 337
24.0 Special Features of the CPU 343
25.0 Instruction Set Summary 360
26.0 Development Support 410
27.0 Electrical Specifications 414
28.0 DC and AC Characteristics Graphs and Tables 453
29.0 Packaging Information 509
Appendix A: Revision History 534
Appendix B: Device Differences 535
The Microchip Web Site 536
Customer Change Notification Service 536
Customer Support 536
Product Identification System 537

TO OUR VALUED CUSTOMERS

It is our intention to provide our valued customers with the best documentation possible to ensure successful use of your Microchip products. To this end, we will continue to improve our publications to better suit your needs. Our publications will be refined and enhanced as new volumes and updates are introduced.

If you have any questions or comments regarding this publication, please contact the Marketing Communications Department via E-mail at **docerrors@microchip.com**. We welcome your feedback.

Most Current Data Sheet

To obtain the most up-to-date version of this data sheet, please register at our Worldwide Website at:

http://www.microchip.com

You can determine the version of a data sheet by examining its literature number found on the bottom outside corner of any page. The last character of the literature number is the version number, (e.g., DS30000000A is version A of document DS30000000).

Errata

An errata sheet, describing minor operational differences from the data sheet and recommended workarounds, may exist for current devices. As device/documentation issues become known to us, we will publish an errata sheet. The errata will specify the revision of silicon and revision of document to which it applies.

To determine if an errata sheet exists for a particular device, please check with one of the following:

- Microchip's Worldwide Website; **http://www.microchip.com**
- Your local Microchip sales office (see last page)

When contacting a sales office, please specify which device, revision of silicon and data sheet (include literature number) you are using.

Customer Notification System

Register on our website at **www.microchip.com** to receive the most current information on all of our products.

© 2010-2016 Microchip Technology Inc.

1.0 DEVICE OVERVIEW

This document contains device specific information for the following devices:

- PIC18F23K22
- PIC18F24K22
- PIC18F25K22
- PIC18F26K22
- PIC18F43K22
- PIC18F44K22
- PIC18F45K22
- PIC18F46K22
- PIC18LF23K22
- PIC18LF24K22
- PIC18LF25K22
- PIC18LF26K22
- PIC18LF43K22
- PIC18LF44K22
- PIC18LF45K22
- PIC18LF46K22

This family offers the advantages of all PIC18 microcontrollers – namely, high computational performance at an economical price – with the addition of high-endurance, Flash program memory. On top of these features, the PIC18(L)F2X/4XK22 family introduces design enhancements that make these microcontrollers a logical choice for many high-performance, power sensitive applications.

1.1 New Core Features

1.1.1 XLP TECHNOLOGY

All of the devices in the PIC18(L)F2X/4XK22 family incorporate a range of features that can significantly reduce power consumption during operation. Key items include:

- **Alternate Run Modes:** By clocking the controller from the Timer1 source or the internal oscillator block, power consumption during code execution can be reduced by as much as 90%.
- **Multiple Idle Modes:** The controller can also run with its CPU core disabled but the peripherals still active. In these states, power consumption can be reduced even further, to as little as 4% of normal operation requirements.
- **On-the-fly Mode Switching:** The power-managed modes are invoked by user code during operation, allowing the user to incorporate power-saving ideas into their application's software design.
- **Low Consumption in Key Modules:** The power requirements for both Timer1 and the Watchdog Timer are minimized. See **Section 27.0 "Electrical Specifications"** for values.

1.1.2 MULTIPLE OSCILLATOR OPTIONS AND FEATURES

All of the devices in the PIC18(L)F2X/4XK22 family offer ten different oscillator options, allowing users a wide range of choices in developing application hardware. These include:

- Four Crystal modes, using crystals or ceramic resonators
- Two External Clock modes, offering the option of using two pins (oscillator input and a divide-by-4 clock output) or one pin (oscillator input, with the second pin reassigned as general I/O)
- Two External RC Oscillator modes with the same pin options as the External Clock modes
- An internal oscillator block which contains a 16 MHz HFINTOSC oscillator and a 31 kHz LFINTOSC oscillator, which together provide eight user selectable clock frequencies, from 31 kHz to 16 MHz. This option frees the two oscillator pins for use as additional general purpose I/O.
- A Phase Lock Loop (PLL) frequency multiplier, available to both external and internal oscillator modes, which allows clock speeds of up to 64 MHz. Used with the internal oscillator, the PLL gives users a complete selection of clock speeds, from 31 kHz to 64 MHz – all without using an external crystal or clock circuit.

Besides its availability as a clock source, the internal oscillator block provides a stable reference source that gives the family additional features for robust operation:

- **Fail-Safe Clock Monitor:** This option constantly monitors the main clock source against a reference signal provided by the LFINTOSC. If a clock failure occurs, the controller is switched to the internal oscillator block, allowing for continued operation or a safe application shutdown.
- **Two-Speed Start-up:** This option allows the internal oscillator to serve as the clock source from Power-on Reset, or Wake-up from Sleep mode, until the primary clock source is available.

© 2010-2016 Microchip Technology Inc.

1.2 Other Special Features

- **Memory Endurance:** The Flash cells for both program memory and data EEPROM are rated to last for many thousands of erase/write cycles – up to 10K for program memory and 100K for EEPROM. Data retention without refresh is conservatively estimated to be greater than 40 years.
- **Self-programmability:** These devices can write to their own program memory spaces under internal software control. By using a bootloader routine located in the protected Boot Block at the top of program memory, it becomes possible to create an application that can update itself in the field.
- **Extended Instruction Set:** The PIC18(L)F2X/4XK22 family introduces an optional extension to the PIC18 instruction set, which adds eight new instructions and an Indexed Addressing mode. This extension, enabled as a device configuration option, has been specifically designed to optimize re-entrant application code originally developed in high-level languages, such as C.
- **Enhanced CCP module:** In PWM mode, this module provides one, two or four modulated outputs for controlling half-bridge and full-bridge drivers. Other features include:
  - Auto-Shutdown, for disabling PWM outputs on interrupt or other select conditions
  - Auto-Restart, to reactivate outputs once the condition has cleared
  - Output steering to selectively enable one or more of four outputs to provide the PWM signal.
- **Enhanced Addressable EUSART:** This serial communication module is capable of standard RS-232 operation and provides support for the LIN bus protocol. Other enhancements include automatic baud rate detection and a 16-bit Baud Rate Generator for improved resolution. When the microcontroller is using the internal oscillator block, the EUSART provides stable operation for applications that talk to the outside world without using an external crystal (or its accompanying power requirement).
- **10-bit A/D Converter:** This module incorporates programmable acquisition time, allowing for a channel to be selected and a conversion to be initiated without waiting for a sampling period and thus, reduce code overhead.
- **Extended Watchdog Timer (WDT):** This enhanced version incorporates a 16-bit postscaler, allowing an extended time-out range that is stable across operating voltage and temperature. See **Section 27.0 “Electrical Specifications”** for time-out periods.
- **Charge Time Measurement Unit (CTMU)**
- **SR Latch Output:**

1.3 Details on Individual Family Members

Devices in the PIC18(L)F2X/4XK22 family are available in 28-pin and 40/44-pin packages. The block diagram for the device family is shown in Figure 1-1.

The devices have the following differences:

1. Flash program memory
2. Data Memory SRAM
3. Data Memory EEPROM
4. A/D channels
5. I/O ports
6. ECCP modules (Full/Half Bridge)
7. Input Voltage Range/Power Consumption

All other features for devices in this family are identical. These are summarized in Table 1-1.

The pinouts for all devices are listed in the pin summary tables: Table 2 and Table 3, and I/O description tables: Table 1-2 and Table 1-3.

© 2010-2016 Microchip Technology Inc.

TABLE 1-1: DEVICE FEATURES

Features	PIC18F23K22 PIC18LF23K22	PIC18F24K22 PIC18LF24K22	PIC18F25K22 PIC18(L)F25K22	PIC18F26K22 PIC18LF26K22	PIC18F43K22 PIC18LF43K22	PIC18F44K22 PIC18LF44K22	PIC18F45K22 PIC18LF45K22	PIC18F46K22 PIC18LF46K22
Program Memory (Bytes)	8192	16384	32768	65536	8192	16384	32768	65536
Program Memory (Instructions)	4096	8192	16384	32768	4096	8192	16384	32768
Data Memory (Bytes)	512	768	1536	3896	512	768	1536	3896
Data EEPROM Memory (Bytes)	256	256	256	1024	256	256	256	1024
I/O Ports	A, B, C, E(1)	A, B, C, E(1)	A, B, C, E(1)	A, B, C, E(1)	A, B, C, D, E	A, B, C, D, E	A, B, C, D, E	A, B, C, D, E
Capture/Compare/PWM Modules (CCP)	2	2	2	2	2	2	2	2
Enhanced CCP Modules (ECCP) - Half Bridge	2	2	2	2	1	1	1	1
Enhanced CCP Modules (ECCP) - Full Bridge	1	1	1	1	2	2	2	2
10-bit Analog-to-Digital Module (ADC)	2 internal 17 input	2 internal 17 input	2 internal 17 input	2 internal 17 input	2 internal 28 input	2 internal 28 input	2 internal 28 input	2 internal 28 input
Packages	28-pin PDIP 28-pin SOIC 28-pin SSOP 28-pin QFN 28-pin UQFN	28-pin PDIP 28-pin SOIC 28-pin SSOP 28-pin QFN 28-pin UQFN	28-pin PDIP 28-pin SOIC 28-pin SSOP 28-pin QFN	28-pin PDIP 28-pin SOIC 28-pin SSOP 28-pin QFN	40-pin PDIP 40-pin UQFN 44-pin QFN 44-pin TQFP	40-pin PDIP 40-pin UQFN 44-pin QFN 44-pin TQFP	40-pin PDIP 40-pin UQFN 44-pin QFN 44-pin TQFP	40-pin PDIP 40-pin UQFN 44-pin QFN 44-pin TQFP
Interrupt Sources	33							
Timers (16-bit)	4							
Serial Communications	2 MSSP, 2 EUSART							
SR Latch	Yes							
Charge Time Measurement Unit Module (CTMU)	Yes							
Programmable High/Low-Voltage Detect (HLVD)	Yes							
Programmable Brown-out Reset (BOR)	Yes							
Resets (and Delays)	POR, BOR, RESET Instruction, Stack Overflow, Stack Underflow (PWRT, OST), MCLR, WDT							
Instruction Set	75 Instructions; 83 with Extended Instruction Set enabled							
Operating Frequency	DC - 64 MHz							

Note 1: PORTE contains the single RE3 read-only bit.

© 2010-2016 Microchip Technology Inc.

FIGURE 1-1: PIC18(L)F2X/4XK22 FAMILY BLOCK DIAGRAM

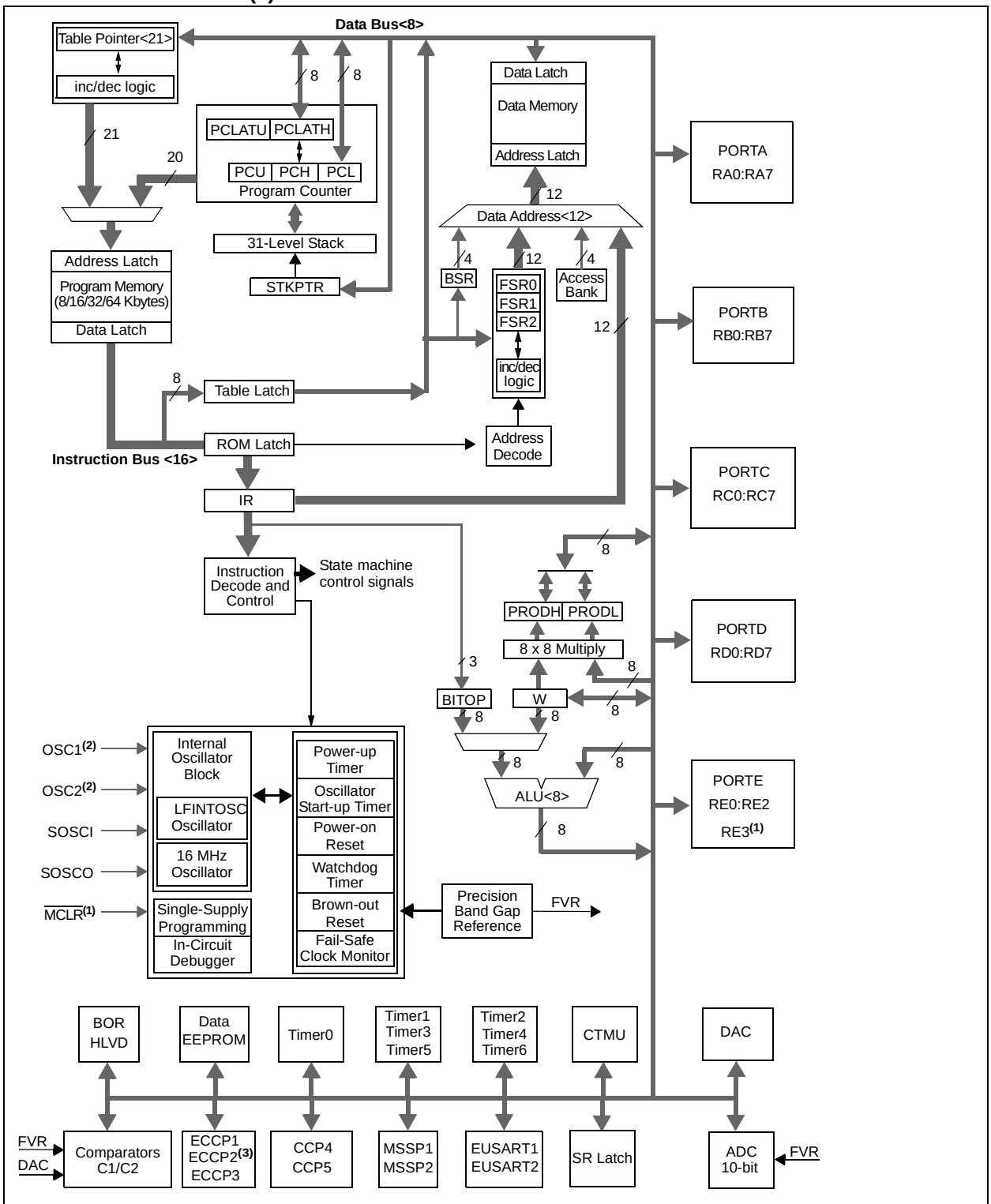

Note 1: RE3 is only available when $\overline{\text{MCLR}}$ functionality is disabled.

2: OSC1/CLKIN and OSC2/CLKOUT are only available in select oscillator modes and when these pins are not being used as digital I/O. Refer to **Section 2.0 "Oscillator Module (With Fail-Safe Clock Monitor)"** for additional information.

3: Full-Bridge operation for PIC18(L)F4XK22, half-bridge operation for PIC18(L)F2XK22.

© 2010-2016 Microchip Technology Inc.

TABLE 1-2: PIC18(L)F2XK22 PINOUT I/O DESCRIPTIONS

Pin Number		Pin Name	Pin Type	Buffer Type	Description
PDIP, SOIC	QFN, UQFN				
2	27	RA0/C12IN0-/AN0			
		RA0	I/O	TTL	Digital I/O.
		C12IN0-	I	Analog	Comparators C1 and C2 inverting input.
		AN0	I	Analog	Analog input 0.
3	28	RA1/C12IN1-/AN1			
		RA1	I/O	TTL	Digital I/O.
		C12IN1-	I	Analog	Comparators C1 and C2 inverting input.
		AN1	I	Analog	Analog input 1.
4	1	RA2/C2IN+/AN2/DACOUT/VREF-			
		RA2	I/O	TTL	Digital I/O.
		C2IN+	I	Analog	Comparator C2 non-inverting input.
		AN2	I	Analog	Analog input 2.
		DACOUT	O	Analog	DAC Reference output.
		VREF-	I	Analog	A/D reference voltage (low) input.
5	2	RA3/C1IN+/AN3/VREF+			
		RA3	I/O	TTL	Digital I/O.
		C1IN+	I	Analog	Comparator C1 non-inverting input.
		AN3	I	Analog	Analog input 3.
		VREF+	I	Analog	A/D reference voltage (high) input.
6	3	RA4/CCP5/C1OUT/SRQ/T0CKI			
		RA4	I/O	ST	Digital I/O.
		CCP5	I/O	ST	Capture 5 input/Compare 5 output/PWM 5 output.
		C1OUT	O	CMOS	Comparator C1 output.
		SRQ	O	TTL	SR latch Q output.
		T0CKI	I	ST	Timer0 external clock input.
7	4	RA5/C2OUT/SRNQ/$\overline{SS1}$/HLVDIN/AN4			
		RA5	I/O	TTL	Digital I/O.
		C2OUT	O	CMOS	Comparator C2 output.
		SRNQ	O	TTL	SR latch $\overline{Q}$ output.
		$\overline{SS1}$	I	TTL	SPI slave select input (MSSP).
		HLVDIN	I	Analog	High/Low-Voltage Detect input.
		AN4	I	Analog	Analog input 4.
10	7	RA6/CLKO/OSC2			
		RA6	I/O	TTL	Digital I/O.
		CLKO	O		In RC mode, OSC2 pin outputs CLKOUT which has 1/4 the frequency of OSC1 and denotes the instruction cycle rate.
		OSC2	O		Oscillator crystal output. Connects to crystal or resonator in Crystal Oscillator mode.

Legend: TTL = TTL compatible input CMOS = CMOS compatible input or output; ST = Schmitt Trigger input with CMOS levels; I = Input; O = Output; P = Power.

Note 1: Default pin assignment for P2B, T3CKI, CCP3 and CCP2 when Configuration bits PB2MX, T3CMX, CCP3MX and CCP2MX are set.

2: Alternate pin assignment for P2B, T3CKI, CCP3 and CCP2 when Configuration bits PB2MX, T3CMX, CCP3MX and CCP2MX are clear.

TABLE 1-2: PIC18(L)F2XK22 PINOUT I/O DESCRIPTIONS (CONTINUED)

Pin Number		Pin Name	Pin Type	Buffer Type	Description
PDIP, SOIC	QFN, UQFN				
9	6	RA7/CLKI/OSC1			
		RA7	I/O	TTL	Digital I/O.
		CLKI	I	CMOS	External clock source input. Always associated with pin function OSC1.
		OSC1	I	ST	Oscillator crystal input or external clock source input ST buffer when configured in RC mode; CMOS otherwise.
21	18	RB0/INT0/CCP4/FLT0/SRI/$\overline{SS2}$/AN12			
		RB0	I/O	TTL	Digital I/O.
		INT0	I	ST	External interrupt 0.
		CCP4	I/O	ST	Capture 4 input/Compare 4 output/PWM 4 output.
		FLT0	I	ST	PWM Fault input for ECCP Auto-Shutdown.
		SRI	I	ST	SR latch input.
		$\overline{SS2}$	I	TTL	SPI slave select input (MSSP).
		AN12	I	Analog	Analog input 12.
22	19	RB1/INT1/P1C/SCK2/SCL2/C12IN3-/AN10			
		RB1	I/O	TTL	Digital I/O.
		INT1	I	ST	External interrupt 1.
		P1C	O	CMOS	Enhanced CCP1 PWM output.
		SCK2	I/O	ST	Synchronous serial clock input/output for SPI mode (MSSP).
		SCL2	I/O	ST	Synchronous serial clock input/output for I^2C mode (MSSP).
		C12IN3-	I	Analog	Comparators C1 and C2 inverting input.
		AN10	I	Analog	Analog input 10.
23	20	RB2/INT2/CTED1/P1B/SDI2/SDA2/AN8			
		RB2	I/O	TTL	Digital I/O.
		INT2	I	ST	External interrupt 2.
		CTED1	I	ST	CTMU Edge 1 input.
		P1B	O	CMOS	Enhanced CCP1 PWM output.
		SDI2	I	ST	SPI data in (MSSP).
		SDA2	I/O	ST	I^2C data I/O (MSSP).
		AN8	I	Analog	Analog input 8.
24	21	RB3/CTED2/P2A/CCP2/SDO2/C12IN2-/AN9			
		RB3	I/O	TTL	Digital I/O.
		CTED2	I	ST	CTMU Edge 2 input.
		P2A	O	CMOS	Enhanced CCP2 PWM output.
		CCP2(2)	I/O	ST	Capture 2 input/Compare 2 output/PWM 2 output.
		SDO2	O	—	SPI data out (MSSP).
		C12IN2-	I	Analog	Comparators C1 and C2 inverting input.
		AN9	I	Analog	Analog input 9.

Legend: TTL = TTL compatible input CMOS = CMOS compatible input or output; ST = Schmitt Trigger input with CMOS levels; I = Input; O = Output; P = Power.

Note 1: Default pin assignment for P2B, T3CKI, CCP3 and CCP2 when Configuration bits PB2MX, T3CMX, CCP3MX and CCP2MX are set.

2: Alternate pin assignment for P2B, T3CKI, CCP3 and CCP2 when Configuration bits PB2MX, T3CMX, CCP3MX and CCP2MX are clear.

© 2010-2016 Microchip Technology Inc.

TABLE 1-2: PIC18(L)F2XK22 PINOUT I/O DESCRIPTIONS (CONTINUED)

Pin Number		Pin Name	Pin Type	Buffer Type	Description
PDIP, SOIC	QFN, UQFN				
25	22	RB4/IOC0/P1D/T5G/AN11			
		RB4	I/O	TTL	Digital I/O.
		IOC0	I	TTL	Interrupt-on-change pin.
		P1D	O	CMOS	Enhanced CCP1 PWM output.
		T5G	I	ST	Timer5 external clock gate input.
		AN11	I	Analog	Analog input 11.
26	23	RB5/IOC1/P2B/P3A/CCP3/T3CKI/T1G/AN13			
		RB5	I/O	TTL	Digital I/O.
		IOC1	I	TTL	Interrupt-on-change pin.
		P2B(1)	O	CMOS	Enhanced CCP2 PWM output.
		P3A(1)	O	CMOS	Enhanced CCP3 PWM output.
		CCP3(1)	I/O	ST	Capture 3 input/Compare 3 output/PWM 3 output.
		T3CKI(2)	I	ST	Timer3 clock input.
		T1G	I	ST	Timer1 external clock gate input.
		AN13	I	Analog	Analog input 13.
27	24	RB6/IOC2/TX2/CK2/PGC			
		RB6	I/O	TTL	Digital I/O.
		IOC2	I	TTL	Interrupt-on-change pin.
		TX2	O	—	EUSART asynchronous transmit.
		CK2	I/O	ST	EUSART synchronous clock (see related RXx/DTx).
		PGC	I/O	ST	In-Circuit Debugger and ICSP™ programming clock pin.
28	25	RB7/IOC3/RX2/DT2/PGD			
		RB7	I/O	TTL	Digital I/O.
		IOC3	I	TTL	Interrupt-on-change pin.
		RX2	I	ST	EUSART asynchronous receive.
		DT2	I/O	ST	EUSART synchronous data (see related TXx/CKx).
		PGD	I/O	ST	In-Circuit Debugger and ICSP™ programming data pin.
11	8	RC0/P2B/T3CKI/T3G/T1CKI/SOSCO			
		RC0	I/O	ST	Digital I/O.
		P2B(2)	O	CMOS	Enhanced CCP1 PWM output.
		T3CKI(1)	I	ST	Timer3 clock input.
		T3G	I	ST	Timer3 external clock gate input.
		T1CKI	I	ST	Timer1 clock input.
		SOSCO	O	—	Secondary oscillator output.
12	9	RC1/P2A/CCP2/SOSCI			
		RC1	I/O	ST	Digital I/O.
		P2A	O	CMOS	Enhanced CCP2 PWM output.
		CCP2(1)	I/O	ST	Capture 2 input/Compare 2 output/PWM 2 output.
		SOSCI	I	Analog	Secondary oscillator input.

Legend: TTL = TTL compatible input CMOS = CMOS compatible input or output; ST = Schmitt Trigger input with CMOS levels; I = Input; O = Output; P = Power.

Note 1: Default pin assignment for P2B, T3CKI, CCP3 and CCP2 when Configuration bits PB2MX, T3CMX, CCP3MX and CCP2MX are set.

2: Alternate pin assignment for P2B, T3CKI, CCP3 and CCP2 when Configuration bits PB2MX, T3CMX, CCP3MX and CCP2MX are clear.

TABLE 1-2: PIC18(L)F2XK22 PINOUT I/O DESCRIPTIONS (CONTINUED)

Pin Number		Pin Name	Pin Type	Buffer Type	Description
PDIP, SOIC	QFN, UQFN				
13	10	RC2/CTPLS/P1A/CCP1/T5CKI/AN14			
		RC2	I/O	ST	Digital I/O.
		CTPLS	O	—	CTMU pulse generator output.
		P1A	O	CMOS	Enhanced CCP1 PWM output.
		CCP1	I/O	ST	Capture 1 input/Compare 1 output/PWM 1 output.
		T5CKI	I	ST	Timer5 clock input.
		AN14	I	Analog	Analog input 14.
14	11	RC3/SCK1/SCL1/AN15			
		RC3	I/O	ST	Digital I/O.
		SCK1	I/O	ST	Synchronous serial clock input/output for SPI mode (MSSP).
		SCL1	I/O	ST	Synchronous serial clock input/output for I^2C mode (MSSP).
		AN15	I	Analog	Analog input 15.
15	12	RC4/SDI1/SDA1/AN16			
		RC4	I/O	ST	Digital I/O.
		SDI1	I	ST	SPI data in (MSSP).
		SDA1	I/O	ST	I^2C data I/O (MSSP).
		AN16	I	Analog	Analog input 16.
16	13	RC5/SDO1/AN17			
		RC5	I/O	ST	Digital I/O.
		SDO1	O	—	SPI data out (MSSP).
		AN17	I	Analog	Analog input 17.
17	14	RC6/P3A/CCP3/TX1/CK1/AN18			
		RC6	I/O	ST	Digital I/O.
		P3A(2)	O	CMOS	Enhanced CCP3 PWM output.
		CCP3(2)	I/O	ST	Capture 3 input/Compare 3 output/PWM 3 output.
		TX1	O	—	EUSART asynchronous transmit.
		CK1	I/O	ST	EUSART synchronous clock (see related RXx/DTx).
		AN18	I	Analog	Analog input 18.
18	15	RC7/P3B/RX1/DT1/AN19			
		RC7	I/O	ST	Digital I/O.
		P3B	O	CMOS	Enhanced CCP3 PWM output.
		RX1	I	ST	EUSART asynchronous receive.
		DT1	I/O	ST	EUSART synchronous data (see related TXx/CKx).
		AN19	I	Analog	Analog input 19.
1	26	RE3/VPP/$\overline{\text{MCLR}}$			
		RE3	I	ST	Digital input.
		VPP	P		Programming voltage input.
		$\overline{\text{MCLR}}$	I	ST	Active-Low Master Clear (device Reset) input.

Legend: TTL = TTL compatible input CMOS = CMOS compatible input or output; ST = Schmitt Trigger input with CMOS levels; I = Input; O = Output; P = Power.

Note 1: Default pin assignment for P2B, T3CKI, CCP3 and CCP2 when Configuration bits PB2MX, T3CMX, CCP3MX and CCP2MX are set.

2: Alternate pin assignment for P2B, T3CKI, CCP3 and CCP2 when Configuration bits PB2MX, T3CMX, CCP3MX and CCP2MX are clear.

© 2010-2016 Microchip Technology Inc.

TABLE 1-2: PIC18(L)F2XK22 PINOUT I/O DESCRIPTIONS (CONTINUED)

Pin Number		Pin Name	Pin Type	Buffer Type	Description
PDIP, SOIC	QFN, UQFN				
20	17	VDD	P	—	Positive supply for logic and I/O pins.
8, 19	5, 16	VSS	P	—	Ground reference for logic and I/O pins.

Legend: TTL = TTL compatible input CMOS = CMOS compatible input or output; ST = Schmitt Trigger input with CMOS levels; I = Input; O = Output; P = Power.

Note 1: Default pin assignment for P2B, T3CKI, CCP3 and CCP2 when Configuration bits PB2MX, T3CMX, CCP3MX and CCP2MX are set.

2: Alternate pin assignment for P2B, T3CKI, CCP3 and CCP2 when Configuration bits PB2MX, T3CMX, CCP3MX and CCP2MX are clear.

TABLE 1-3: PIC18(L)F4XK22 PINOUT I/O DESCRIPTIONS

Pin Number				Pin Name	Pin Type	Buffer Type	Description
PDIP	TQFP	QFN	UQFN				
2	19	19	17	RA0/C12IN0-/AN0			
				RA0	I/O	TTL	Digital I/O.
				C12IN0-	I	Analog	Comparators C1 and C2 inverting input.
				AN0	I	Analog	Analog input 0.
3	20	20	18	RA1/C12IN1-/AN1			
				RA1	I/O	TTL	Digital I/O.
				C12IN1-	I	Analog	Comparators C1 and C2 inverting input.
				AN1	I	Analog	Analog input 1.
4	21	21	19	RA2/C2IN+/AN2/DACOUT/VREF-			
				RA2	I/O	TTL	Digital I/O.
				C2IN+	I	Analog	Comparator C2 non-inverting input.
				AN2	I	Analog	Analog input 2.
				DACOUT	O	Analog	DAC Reference output.
				VREF-	I	Analog	A/D reference voltage (low) input.
5	22	22	20	RA3/C1IN+/AN3/VREF+			
				RA3	I/O	TTL	Digital I/O.
				C1IN+	I	Analog	Comparator C1 non-inverting input.
				AN3	I	Analog	Analog input 3.
				VREF+	I	Analog	A/D reference voltage (high) input.
6	23	23	21	RA4/C1OUT/SRQ/T0CKI			
				RA4	I/O	ST	Digital I/O.
				C1OUT	O	CMOS	Comparator C1 output.
				SRQ	O	TTL	SR latch Q output.
				T0CKI	I	ST	Timer0 external clock input.

Legend: TTL = TTL compatible input CMOS = CMOS compatible input or output; ST = Schmitt Trigger input with CMOS levels; I = Input; O = Output; P = Power.

Note 1: Default pin assignment for P2B, T3CKI, CCP3/P3A and CCP2/P2A when Configuration bits PB2MX, T3CMX, CCP3MX and CCP2MX are set.

2: Alternate pin assignment for P2B, T3CKI, CCP3/P3A and CCP2/P2A when Configuration bits PB2MX, T3CMX, CCP3MX and CCP2MX are clear.

TABLE 1-3: PIC18(L)F4XK22 PINOUT I/O DESCRIPTIONS (CONTINUED)

Pin Number				Pin Name	Pin Type	Buffer Type	Description
PDIP	TQFP	QFN	UQFN				
7	24	24	22	RA5/C2OUT/SRNQ/$\overline{SS1}$/HLVDIN/AN4			
				RA5	I/O	TTL	Digital I/O.
				C2OUT	O	CMOS	Comparator C2 output.
				SRNQ	O	TTL	SR latch $\overline{Q}$ output.
				$\overline{SS1}$	I	TTL	SPI slave select input (MSSP1).
				HLVDIN	I	Analog	High/Low-Voltage Detect input.
				AN4	I	Analog	Analog input 4.
14	31	33	29	RA6/CLKO/OSC2			
				RA6	I/O	TTL	Digital I/O.
				CLKO	O	—	In RC mode, OSC2 pin outputs CLKOUT which has 1/4 the frequency of OSC1 and denotes the instruction cycle rate.
				OSC2	O	—	Oscillator crystal output. Connects to crystal or resonator in Crystal Oscillator mode.
13	30	32	28	RA7/CLKI/OSC1			
				RA7	I/O	TTL	Digital I/O.
				CLKI	I	CMOS	External clock source input. Always associated with pin function OSC1.
				OSC1	I	ST	Oscillator crystal input or external clock source input ST buffer when configured in RC mode; CMOS otherwise.
33	8	9	8	RB0/INT0/FLT0/SRI/AN12			
				RB0	I/O	TTL	Digital I/O.
				INT0	I	ST	External interrupt 0.
				FLT0	I	ST	PWM Fault input for ECCP Auto-Shutdown.
				SRI	I	ST	SR latch input.
				AN12	I	Analog	Analog input 12.
34	9	10	9	RB1/INT1/C12IN3-/AN10			
				RB1	I/O	TTL	Digital I/O.
				INT1	I	ST	External interrupt 1.
				C12IN3-	I	Analog	Comparators C1 and C2 inverting input.
				AN10	I	Analog	Analog input 10.
35	10	11	10	RB2/INT2/CTED1/AN8			
				RB2	I/O	TTL	Digital I/O.
				INT2	I	ST	External interrupt 2.
				CTED1	I	ST	CTMU Edge 1 input.
				AN8	I	Analog	Analog input 8.
36	11	12	11	RB3/CTED2/P2A/CCP2/C12IN2-/AN9			
				RB3	I/O	TTL	Digital I/O.
				CTED2	I	ST	CTMU Edge 2 input.
				P2A(2)	O	CMOS	Enhanced CCP2 PWM output.
				CCP2(2)	I/O	ST	Capture 2 input/Compare 2 output/PWM 2 output.
				C12IN2-	I	Analog	Comparators C1 and C2 inverting input.
				AN9	I	Analog	Analog input 9.

Legend: TTL = TTL compatible input CMOS = CMOS compatible input or output; ST = Schmitt Trigger input with CMOS levels; I = Input; O = Output; P = Power.

Note 1: Default pin assignment for P2B, T3CKI, CCP3/P3A and CCP2/P2A when Configuration bits PB2MX, T3CMX, CCP3MX and CCP2MX are set.

2: Alternate pin assignment for P2B, T3CKI, CCP3/P3A and CCP2/P2A when Configuration bits PB2MX, T3CMX, CCP3MX and CCP2MX are clear.

© 2010-2016 Microchip Technology Inc.

TABLE 1-3: PIC18(L)F4XK22 PINOUT I/O DESCRIPTIONS (CONTINUED)

Pin Number				Pin Name	Pin Type	Buffer Type	Description
PDIP	TQFP	QFN	UQFN				
37	14	14	12	RB4/IOC0/T5G/AN11			
				RB4	I/O	TTL	Digital I/O.
				IOC0	I	TTL	Interrupt-on-change pin.
				T5G	I	ST	Timer5 external clock gate input.
				AN11	I	Analog	Analog input 11.
38	15	15	13	RB5/IOC1/P3A/CCP3/T3CKI/T1G/AN13			
				RB5	I/O	TTL	Digital I/O.
				IOC1	I	TTL	Interrupt-on-change pin.
				P3A(1)	O	CMOS	Enhanced CCP3 PWM output.
				CCP3(1)	I/O	ST	Capture 3 input/Compare 3 output/PWM 3 output.
				T3CKI(2)	I	ST	Timer3 clock input.
				T1G	I	ST	Timer1 external clock gate input.
				AN13	I	Analog	Analog input 13.
39	16	16	14	RB6/IOC2/PGC			
				RB6	I/O	TTL	Digital I/O.
				IOC2	I	TTL	Interrupt-on-change pin.
				PGC	I/O	ST	In-Circuit Debugger and ICSP™ programming clock pin.
40	17	17	15	RB7/IOC3/PGD			
				RB7	I/O	TTL	Digital I/O.
				IOC3	I	TTL	Interrupt-on-change pin.
				PGD	I/O	ST	In-Circuit Debugger and ICSP™ programming data pin.
15	32	34	30	RC0/P2B/T3CKI/T3G/T1CKI/SOSCO			
				RC0	I/O	ST	Digital I/O.
				P2B(2)	O	CMOS	Enhanced CCP1 PWM output.
				T3CKI(1)	I	ST	Timer3 clock input.
				T3G	I	ST	Timer3 external clock gate input.
				T1CKI	I	ST	Timer1 clock input.
				SOSCO	O	—	Secondary oscillator output.
16	35	35	31	RC1/P2A/CCP2/SOSCI			
				RC1	I/O	ST	Digital I/O.
				P2A(1)	O	CMOS	Enhanced CCP2 PWM output.
				CCP2(1)	I/O	ST	Capture 2 input/Compare 2 output/PWM 2 output.
				SOSCI	I	Analog	Secondary oscillator input.
17	36	36	32	RC2/CTPLS/P1A/CCP1/T5CKI/AN14			
				RC2	I/O	ST	Digital I/O.
				CTPLS	O	—	CTMU pulse generator output.
				P1A	O	CMOS	Enhanced CCP1 PWM output.
				CCP1	I/O	ST	Capture 1 input/Compare 1 output/PWM 1 output.
				T5CKI	I	ST	Timer5 clock input.
				AN14	I	Analog	Analog input 14.

Legend: TTL = TTL compatible input CMOS = CMOS compatible input or output; ST = Schmitt Trigger input with CMOS levels; I = Input; O = Output; P = Power.

Note 1: Default pin assignment for P2B, T3CKI, CCP3/P3A and CCP2/P2A when Configuration bits PB2MX, T3CMX, CCP3MX and CCP2MX are set.

2: Alternate pin assignment for P2B, T3CKI, CCP3/P3A and CCP2/P2A when Configuration bits PB2MX, T3CMX, CCP3MX and CCP2MX are clear.

TABLE 1-3: PIC18(L)F4XK22 PINOUT I/O DESCRIPTIONS (CONTINUED)

Pin Number				Pin Name	Pin Type	Buffer Type	Description
PDIP	TQFP	QFN	UQFN				
18	37	37	33	RC3/SCK1/SCL1/AN15			
				RC3	I/O	ST	Digital I/O.
				SCK1	I/O	ST	Synchronous serial clock input/output for SPI mode (MSSP).
				SCL1	I/O	ST	Synchronous serial clock input/output for I^2C mode (MSSP).
				AN15	I	Analog	Analog input 15.
23	42	42	38	RC4/SDI1/SDA1/AN16			
				RC4	I/O	ST	Digital I/O.
				SDI1	I	ST	SPI data in (MSSP).
				SDA1	I/O	ST	I^2C data I/O (MSSP).
				AN16	I	Analog	Analog input 16.
24	43	43	39	RC5/SDO1/AN17			
				RC5	I/O	ST	Digital I/O.
				SDO1	O	—	SPI data out (MSSP).
				AN17	I	Analog	Analog input 17.
25	44	44	40	RC6/TX1/CK1/AN18			
				RC6	I/O	ST	Digital I/O.
				TX1	O	—	EUSART asynchronous transmit.
				CK1	I/O	ST	EUSART synchronous clock (see related RXx/DTx).
				AN18	I	Analog	Analog input 18.
26	1	1	1	RC7/RX1/DT1/AN19			
				RC7	I/O	ST	Digital I/O.
				RX1	I	ST	EUSART asynchronous receive.
				DT1	I/O	ST	EUSART synchronous data (see related TXx/CKx).
				AN19	I	Analog	Analog input 19.
19	38	38	34	RD0/SCK2/SCL2/AN20			
				RD0	I/O	ST	Digital I/O.
				SCK2	I/O	ST	Synchronous serial clock input/output for SPI mode (MSSP).
				SCL2	I/O	ST	Synchronous serial clock input/output for I^2C mode (MSSP).
				AN20	I	Analog	Analog input 20.
20	39	39	35	RD1/CCP4/SDI2/SDA2/AN21			
				RD1	I/O	ST	Digital I/O.
				CCP4	I/O	ST	Capture 4 input/Compare 4 output/PWM 4 output.
				SDI2	I	ST	SPI data in (MSSP).
				SDA2	I/O	ST	I^2C data I/O (MSSP).
				AN21	I	Analog	Analog input 21.

Legend: TTL = TTL compatible input CMOS = CMOS compatible input or output; ST = Schmitt Trigger input with CMOS levels; I = Input; O = Output; P = Power.

Note 1: Default pin assignment for P2B, T3CKI, CCP3/P3A and CCP2/P2A when Configuration bits PB2MX, T3CMX, CCP3MX and CCP2MX are set.

2: Alternate pin assignment for P2B, T3CKI, CCP3/P3A and CCP2/P2A when Configuration bits PB2MX, T3CMX, CCP3MX and CCP2MX are clear.

© 2010-2016 Microchip Technology Inc.

TABLE 1-3: PIC18(L)F4XK22 PINOUT I/O DESCRIPTIONS (CONTINUED)

Pin Number				Pin Name	Pin Type	Buffer Type	Description
PDIP	TQFP	QFN	UQFN				
21	40	40	36	RD2/P2B/AN22			
				RD2	I/O	ST	Digital I/O
				P2B(1)	O	CMOS	Enhanced CCP2 PWM output.
				AN22	I	Analog	Analog input 22.
22	41	41	37	RD3/P2C/$\overline{SS2}$/AN23			
				RD3	I/O	ST	Digital I/O.
				P2C	O	CMOS	Enhanced CCP2 PWM output.
				$\overline{SS2}$	I	TTL	SPI slave select input (MSSP).
				AN23	I	Analog	Analog input 23.
27	2	2	2	RD4/P2D/SDO2/AN24			
				RD4	I/O	ST	Digital I/O.
				P2D	O	CMOS	Enhanced CCP2 PWM output.
				SDO2	O	—	SPI data out (MSSP).
				AN24	I	Analog	Analog input 24.
28	3	3	3	RD5/P1B/AN25			
				RD5	I/O	ST	Digital I/O.
				P1B	O	CMOS	Enhanced CCP1 PWM output.
				AN25	I	Analog	Analog input 25.
29	4	4	4	RD6/P1C/TX2/CK2/AN26			
				RD6	I/O	ST	Digital I/O.
				P1C	O	CMOS	Enhanced CCP1 PWM output.
				TX2	O	—	EUSART asynchronous transmit.
				CK2	I/O	ST	EUSART synchronous clock (see related RXx/DTx).
				AN26	I	Analog	Analog input 26.
30	5	5	5	RD7/P1D/RX2/DT2/AN27			
				RD7	I/O	ST	Digital I/O.
				P1D	O	CMOS	Enhanced CCP1 PWM output.
				RX2	I	ST	EUSART asynchronous receive.
				DT2	I/O	ST	EUSART synchronous data (see related TXx/CKx).
				AN27	I	Analog	Analog input 27.
8	25	25	23	RE0/P3A/CCP3/AN5			
				RE0	I/O	ST	Digital I/O.
				P3A(2)	O	CMOS	Enhanced CCP3 PWM output.
				CCP3(2)	I/O	ST	Capture 3 input/Compare 3 output/PWM 3 output.
				AN5	I	Analog	Analog input 5.
9	26	26	24	RE1/P3B/AN6			
				RE1	I/O	ST	Digital I/O.
				P3B	O	CMOS	Enhanced CCP3 PWM output.
				AN6	I	Analog	Analog input 6.

Legend: TTL = TTL compatible input CMOS = CMOS compatible input or output; ST = Schmitt Trigger input with CMOS levels; I = Input; O = Output; P = Power.

Note 1: Default pin assignment for P2B, T3CKI, CCP3/P3A and CCP2/P2A when Configuration bits PB2MX, T3CMX, CCP3MX and CCP2MX are set.

2: Alternate pin assignment for P2B, T3CKI, CCP3/P3A and CCP2/P2A when Configuration bits PB2MX, T3CMX, CCP3MX and CCP2MX are clear.

TABLE 1-3: PIC18(L)F4XK22 PINOUT I/O DESCRIPTIONS (CONTINUED)

Pin Number				Pin Name	Pin Type	Buffer Type	Description
PDIP	TQFP	QFN	UQFN				
10	27	27	25	RE2/CCP5/AN7			
				RE2	I/O	ST	Digital I/O.
				CCP5	I/O	ST	Capture 5 input/Compare 5 output/PWM 5 output
				AN7	I	Analog	Analog input 7.
1	18	18	16	RE3/VPP/$\overline{\text{MCLR}}$			
				RE3	I	ST	Digital input.
				VPP	P		Programming voltage input.
				$\overline{\text{MCLR}}$	I	ST	Active-low Master Clear (device Reset) input.
11,32	7, 28	7, 8, 28, 29	7, 26	VDD	P	—	Positive supply for logic and I/O pins.
12,31	6, 29	6,30, 31	6, 27	VSS	P	—	Ground reference for logic and I/O pins.
	12,13, 33,34	13		NC			

Legend: TTL = TTL compatible input CMOS = CMOS compatible input or output; ST = Schmitt Trigger input with CMOS levels; I = Input; O = Output; P = Power.

Note 1: Default pin assignment for P2B, T3CKI, CCP3/P3A and CCP2/P2A when Configuration bits PB2MX, T3CMX, CCP3MX and CCP2MX are set.

2: Alternate pin assignment for P2B, T3CKI, CCP3/P3A and CCP2/P2A when Configuration bits PB2MX, T3CMX, CCP3MX and CCP2MX are clear.

© 2010-2016 Microchip Technology Inc.

2.0 OSCILLATOR MODULE (WITH FAIL-SAFE CLOCK MONITOR)

2.1 Overview

The oscillator module has a wide variety of clock sources and selection features that allow it to be used in a wide range of applications while maximizing performance and minimizing power consumption. Figure 2-1 illustrates a block diagram of the oscillator module.

Clock sources can be configured from external oscillators, quartz crystal resonators, ceramic resonators and Resistor-Capacitor (RC) circuits. In addition, the system clock source can be configured from one of three internal oscillators, with a choice of speeds selectable via software. Additional clock features include:

- Selectable system clock source between external or internal sources via software.
- Two-Speed Start-up mode, which minimizes latency between external oscillator start-up and code execution.
- Fail-Safe Clock Monitor (FSCM) designed to detect a failure of the external clock source (LP, XT, HS, EC or RC modes) and switch automatically to the internal oscillator.
- Oscillator Start-up Timer (OST) ensures stability of crystal oscillator sources.

The primary clock module can be configured to provide one of six clock sources as the primary clock.

1. RC External Resistor/Capacitor
2. LP Low-Power Crystal
3. XT Crystal/Resonator
4. INTOSC Internal Oscillator
5. HS High-Speed Crystal/Resonator
6. EC External Clock

The HS and EC oscillator circuits can be optimized for power consumption and oscillator speed using settings in FOSC<3:0>. Additional FOSC<3:0> selections enable RA6 to be used as I/O or CLKO (FOSC/4) for RC, EC and INTOSC Oscillator modes.

Primary Clock modes are selectable by the FOSC<3:0> bits of the CONFIG1H Configuration register. The primary clock operation is further defined by these Configuration and register bits:

1. PRICLKEN (CONFIG1H<5>)
2. PRISD (OSCCON2<2>)
3. PLLCFG (CONFIG1H<4>)
4. PLLEN (OSCTUNE<6>)
5. HFOFST (CONFIG3H<3>)
6. IRCF<2:0> (OSCCON<6:4>)
7. MFIOSEL (OSCCON2<4>)
8. INTSRC (OSCTUNE<7>)

The HFINTOSC, MFINTOSC and LFINTOSC are factory calibrated high, medium and low-frequency oscillators, respectively, which are used as the internal clock sources.

FIGURE 2-1: SIMPLIFIED OSCILLATOR SYSTEM BLOCK DIAGRAM

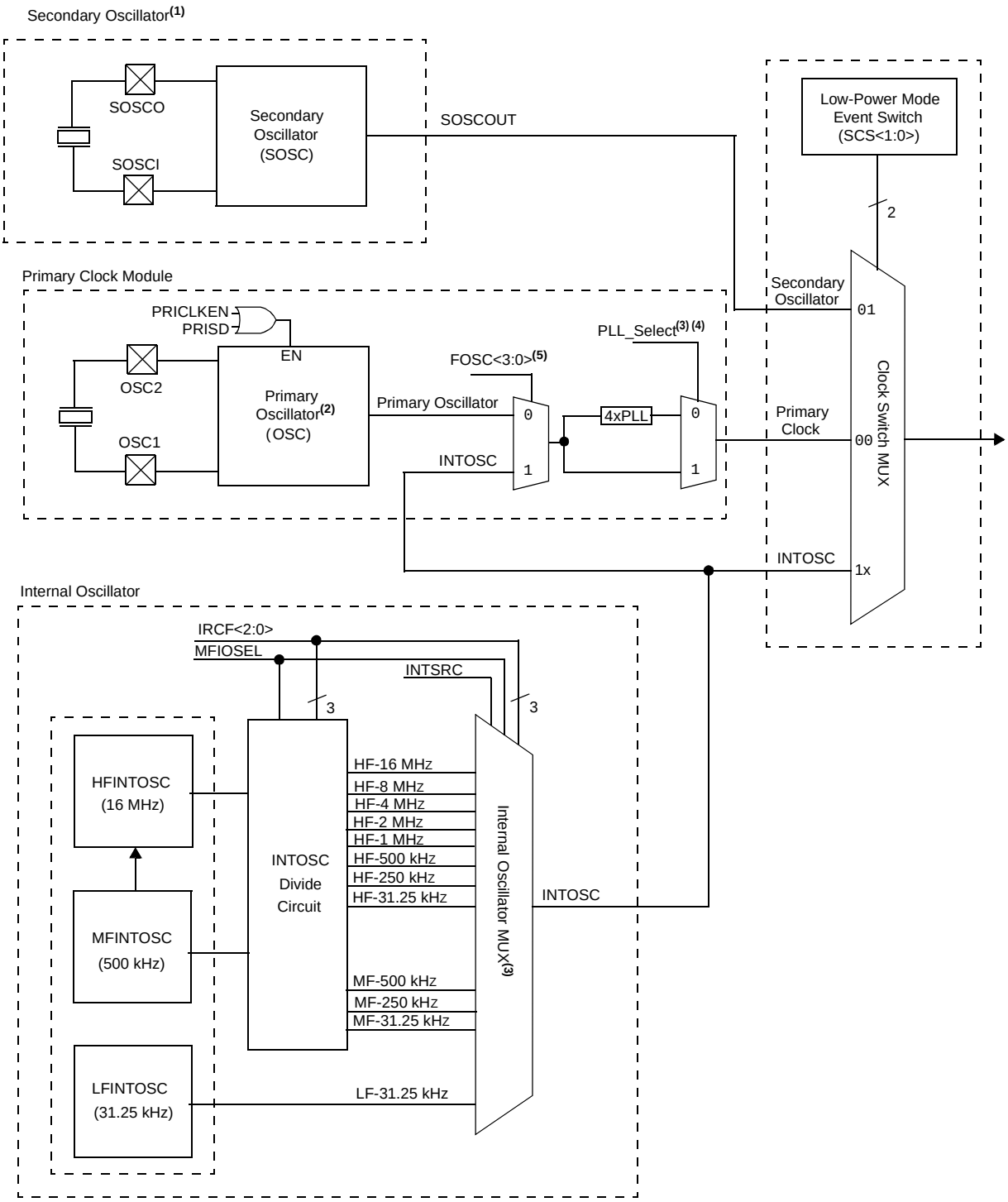

Note 1: Details in Figure 2-4.

2: Details in Figure 2-2.

3: Details in Figure 2-3.

4: Details in Table 2-1.

5: The Primary Oscillator MUX uses the INTOSC branch when FOSC<3:0> = 100x.

© 2010-2016 Microchip Technology Inc.

2.2 Oscillator Control

The OSCCON, OSCCON2 and OSCTUNE registers (Register 2-1 to Register 2-3) control several aspects of the device clock's operation, both in full-power operation and in power-managed modes.

- Main System Clock Selection (SCS)
- Primary Oscillator Circuit Shutdown (PRISD)
- Secondary Oscillator Enable (SOSCGO)
- Primary Clock Frequency 4x multiplier (PLLEN)
- Internal Frequency selection bits (IRCF, INTSRC)
- Clock Status bits (OSTS, HFIOFS, MFIOFS, LFIOFS. SOSCRUN, PLLRDY)
- Power management selection (IDLEN)

2.2.1 MAIN SYSTEM CLOCK SELECTION

The System Clock Select bits, SCS<1:0>, select the main clock source. The available clock sources are

- Primary clock defined by the FOSC<3:0> bits of CONFIG1H. The primary clock can be the primary oscillator, an external clock, or the internal oscillator block.
- Secondary clock (secondary oscillator)
- Internal oscillator block (HFINTOSC, MFINTOSC and LFINTOSC).

The clock source changes immediately after one or more of the bits is written to, following a brief clock transition interval. The SCS bits are cleared to select the primary clock on all forms of Reset.

2.2.2 INTERNAL FREQUENCY SELECTION

The Internal Oscillator Frequency Select bits (IRCF<2:0>) select the frequency output of the internal oscillator block. The choices are the LFINTOSC source (31.25 kHz), the MFINTOSC source (31.25 kHz, 250 kHz or 500 kHz) and the HFINTOSC source (16 MHz) or one of the frequencies derived from the HFINTOSC postscaler (31.25 kHz to 8 MHz). If the internal oscillator block is supplying the main clock, changing the states of these bits will have an immediate change on the internal oscillator's output. On device Resets, the output frequency of the internal oscillator is set to the default frequency of 1 MHz.

2.2.3 LOW FREQUENCY SELECTION

When a nominal output frequency of 31.25 kHz is selected (IRCF<2:0> = 000), users may choose which internal oscillator acts as the source. This is done with the INTSRC bit of the OSCTUNE register and MFIOSEL bit of the OSCCON2 register. See Figure 2-2 and Register 2-1 for specific 31.25 kHz selection. This option allows users to select a 31.25 kHz clock (MFINTOSC or HFINTOSC) that can be tuned using the TUN<5:0> bits in OSCTUNE register, while maintaining power savings with a very low clock speed. LFINTOSC always remains the clock source for features such as the Watchdog Timer and the Fail-Safe Clock Monitor, regardless of the setting of INTSRC and MFIOSEL bits

This option allows users to select the tunable and more precise HFINTOSC as a clock source, while maintaining power savings with a very low clock speed.

2.2.4 POWER MANAGEMENT

The IDLEN bit of the OSCCON register determines whether the device goes into Sleep mode or one of the Idle modes when the SLEEP instruction is executed.

FIGURE 2-2: INTERNAL OSCILLATOR MUX BLOCK DIAGRAM

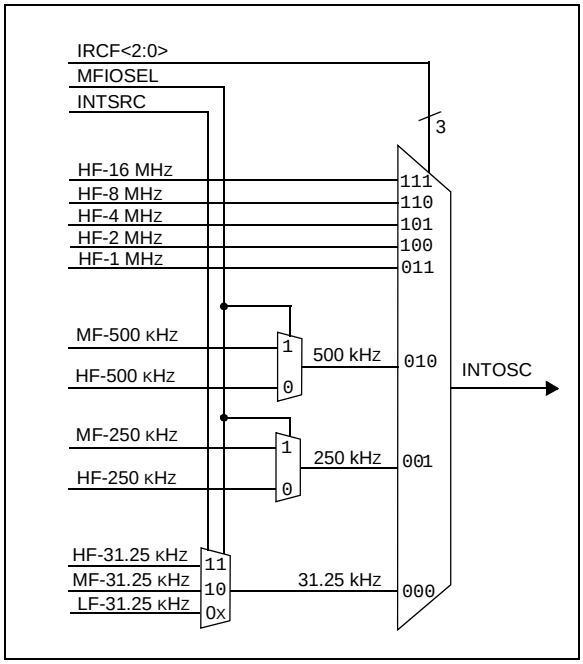

FIGURE 2-3: PLL_SELECT BLOCK DIAGRAM

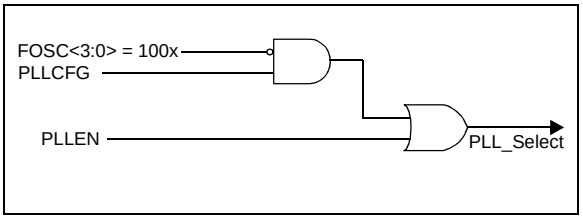

TABLE 2-1: PLL_SELECT TRUTH TABLE

Primary Clock MUX Source	FOSC<3:0>	PLLCFG	PLLEN	PLL_Select
FOSC (any source)	0000-1111	0	0	0
OSC1/OSC2 (external source)	0000-0111 1010-1111	1	x	1
		0	1	1
INTOSC (internal source)	1000-1001	x	0	0
		x	1	1

© 2010-2016 Microchip Technology Inc.

FIGURE 2-4: SECONDARY OSCILLATOR AND EXTERNAL CLOCK INPUTS

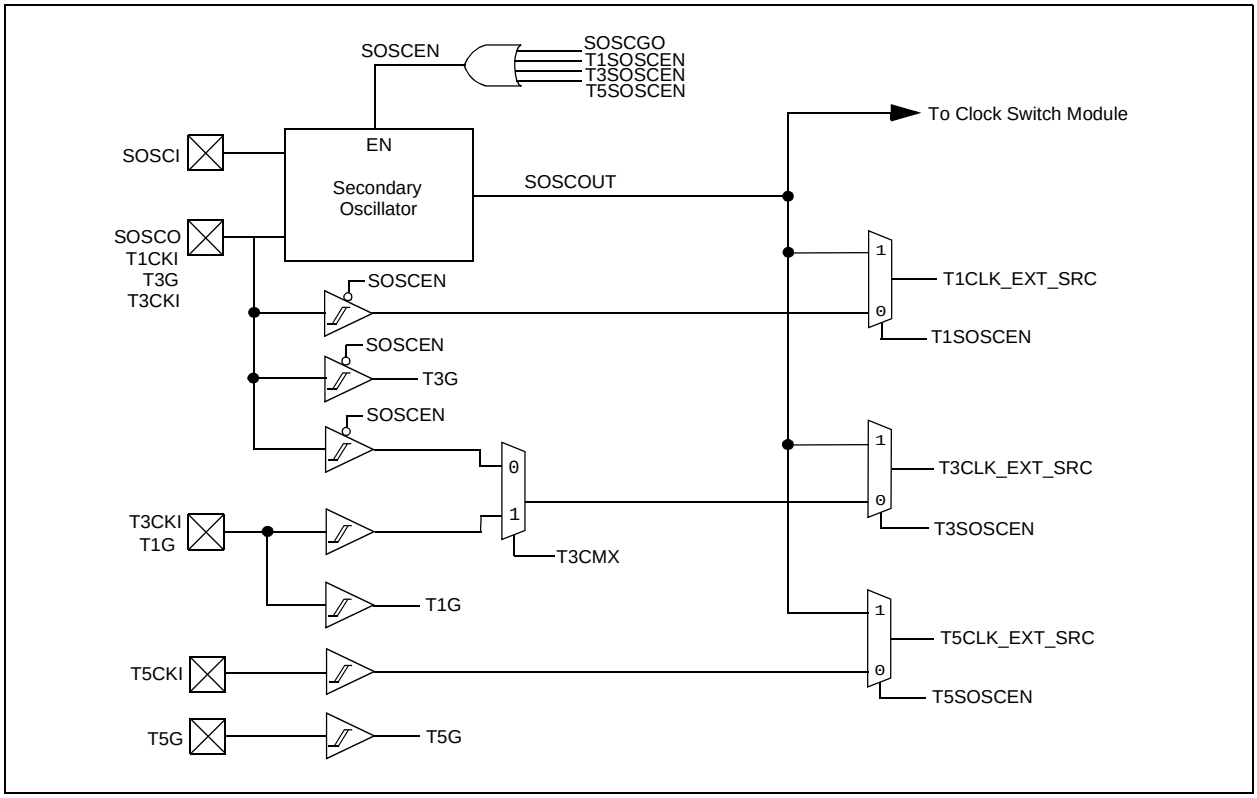

2.3 Register Definitions: Oscillator Control

REGISTER 2-1: OSCCON: OSCILLATOR CONTROL REGISTER

R/W-0	R/W-0	R/W-1	R/W-1	R-q	R-0	R/W-0	R/W-0
IDLEN	IRCF<2:0>			OSTS(1)	HFIOFS	SCS<1:0>	
bit 7							bit 0

Legend:			
R = Readable bit	W = Writable bit	U = Unimplemented bit, read as ‘0’	q = depends on condition
-n = Value at POR	‘1’ = Bit is set	‘0’ = Bit is cleared	x = Bit is unknown

bit 7 **IDLEN:** Idle Enable bit
1 = Device enters Idle mode on SLEEP instruction
0 = Device enters Sleep mode on SLEEP instruction

bit 6-4 **IRCF<2:0>:** Internal RC Oscillator Frequency Select bits(2)
111 = HFINTOSC – (16 MHz)
110 = HFINTOSC/2 – (8 MHz)
101 = HFINTOSC/4 – (4 MHz)
100 = HFINTOSC/8 – (2 MHz)
011 = HFINTOSC/16 – (1 MHz)(3)

If INTSRC = 0 and MFIOSEL = 0:
010 = HFINTOSC/32 – (500 kHz)
001 = HFINTOSC/64 – (250 kHz)
000 = LFINTOSC – (31.25 kHz)

If INTSRC = 1 and MFIOSEL = 0:
010 = HFINTOSC/32 – (500 kHz)
001 = HFINTOSC/64 – (250 kHz)
000 = HFINTOSC/512 – (31.25 kHz)

If INTSRC = 0 and MFIOSEL = 1:
010 = MFINTOSC – (500 kHz)
001 = MFINTOSC/2 – (250 kHz)
000 = LFINTOSC – (31.25 kHz)

If INTSRC = 1 and MFIOSEL = 1:
010 = MFINTOSC – (500 kHz)
001 = MFINTOSC/2 – (250 kHz)
000 = MFINTOSC/16 – (31.25 kHz)

bit 3 **OSTS:** Oscillator Start-up Time-out Status bit
1 = Device is running from the clock defined by FOSC<3:0> of the CONFIG1H register
0 = Device is running from the internal oscillator (HFINTOSC, MFINTOSC or LFINTOSC)

bit 2 **HFIOFS:** HFINTOSC Frequency Stable bit
1 = HFINTOSC frequency is stable
0 = HFINTOSC frequency is not stable

bit 1-0 **SCS<1:0>:** System Clock Select bit
1x = Internal oscillator block
01 = Secondary (SOSC) oscillator
00 = Primary clock (determined by FOSC<3:0> in CONFIG1H).

Note 1: Reset state depends on state of the IESO Configuration bit.
2: INTOSC source may be determined by the INTSRC bit in OSCTUNE and the MFIOSEL bit in OSCCON2.
3: Default output frequency of HFINTOSC on Reset.

© 2010-2016 Microchip Technology Inc.

REGISTER 2-2: OSCCON2: OSCILLATOR CONTROL REGISTER 2

R-0/0	R-0/q	U-0	R/W-0/0	R/W-0/u	R/W-1/1	R-x/u	R-0/0
PLLRDY	SOSCRUN	—	MFIOSEL	SOSCGO(1)	PRISD	MFIOFS	LFIOFS
bit 7							bit 0

Legend:			
R = Readable bit	W = Writable bit	U = Unimplemented bit, read as ‘0’	q = depends on condition
‘1’ = Bit is set	‘0’ = Bit is cleared	x = Bit is unknown	
-n/n = Value at POR and BOR/Value at all other Resets			

bit 7 **PLLRDY:** PLL Run Status bit
1 = System clock comes from 4xPLL
0 = System clock comes from an oscillator, other than 4xPLL

bit 6 **SOSCRUN:** SOSC Run Status bit
1 = System clock comes from secondary SOSC
0 = System clock comes from an oscillator, other than SOSC

bit 5 **Unimplemented:** Read as ‘0’.

bit 4 **MFIOSEL:** MFINTOSC Select bit
1 = MFINTOSC is used in place of HFINTOSC frequencies of 500 kHz, 250 kHz and 31.25 kHz
0 = MFINTOSC is not used

bit 3 **SOSCGO(1):** Secondary Oscillator Start Control bit
1 = Secondary oscillator is enabled.
0 = Secondary oscillator is shut off if no other sources are requesting it.

bit 2 **PRISD:** Primary Oscillator Drive Circuit Shutdown bit
1 = Oscillator drive circuit on
0 = Oscillator drive circuit off (zero power)

bit 1 **MFIOFS:** MFINTOSC Frequency Stable bit
1 = MFINTOSC is stable
0 = MFINTOSC is not stable

bit 0 **LFIOFS:** LFINTOSC Frequency Stable bit
1 = LFINTOSC is stable
0 = LFINTOSC is not stable

Note 1: The SOSCGO bit is only reset on a POR Reset.

2.4 Clock Source Modes

Clock Source modes can be classified as external or internal.

- External Clock modes rely on external circuitry for the clock source. Examples are: Clock modules (EC mode), quartz crystal resonators or ceramic resonators (LP, XT and HS modes) and Resistor-Capacitor (RC mode) circuits.
- Internal clock sources are contained internally within the Oscillator block. The Oscillator block has three internal oscillators: the 16 MHz High-Frequency Internal Oscillator (HFINTOSC), 500 kHz Medium-Frequency Internal Oscillator (MFINTOSC) and the 31.25 kHz Low-Frequency Internal Oscillator (LFINTOSC).

The system clock can be selected between external or internal clock sources via the System Clock Select (SCS<1:0>) bits of the OSCCON register. See **Section 2.11 "Clock Switching"** for additional information.

2.5 External Clock Modes

2.5.1 OSCILLATOR START-UP TIMER (OST)

When the oscillator module is configured for LP, XT or HS modes, the Oscillator Start-up Timer (OST) counts 1024 oscillations from OSC1. This occurs following a Power-on Reset (POR) and when the Power-up Timer (PWRT) has expired (if configured), or a wake-up from Sleep. During this time, the program counter does not increment and program execution is suspended. The OST ensures that the oscillator circuit, using a quartz crystal resonator or ceramic resonator, has started and is providing a stable system clock to the oscillator module. When switching between clock sources, a delay is required to allow the new clock to stabilize. These oscillator delays are shown in Table 2-2.

In order to minimize latency between external oscillator start-up and code execution, the Two-Speed Clock Start-up mode can be selected (see **Section 2.12 "Two-Speed Clock Start-up Mode"**).

TABLE 2-2: OSCILLATOR DELAY EXAMPLES

Switch From	Switch To	Frequency	Oscillator Delay
Sleep/POR/BOR	LFINTOSC MFINTOSC HFINTOSC	31.25 kHz 31.25 kHz to 500 kHz 31.25 kHz to 16 MHz	Oscillator Start-up Delay (TIOSC_ST)
Sleep/POR/BOR	EC, RC	DC – 64 MHz	2 instruction cycles
LFINTOSC (31.25 kHz)	EC, RC	DC – 64 MHz	1 cycle of each
Sleep/POR/BOR	LP, XT, HS	32 kHz to 40 MHz	1024 Clock Cycles (OST)
Sleep/POR/BOR	4xPLL	32 MHz to 64 MHz	1024 Clock Cycles (OST) + 2 ms
LFINTOSC (31.25 kHz)	LFINTOSC HFINTOSC	31.25 kHz to 16 MHz	1 μs (approx.)

2.5.2 EC MODE

The External Clock (EC) mode allows an externally generated logic level as the system clock source. When operating in this mode, an external clock source is connected to the OSC1 input and the OSC2 is available for general purpose I/O. Figure 2-5 shows the pin connections for EC mode.

The External Clock (EC) offers different power modes, Low Power (ECLP), Medium Power (ECMP) and High Power (ECHP), selectable by the FOSC<3:0> bits. Each mode is best suited for a certain range of frequencies. The ranges are:

- ECLP – below 500 kHz
- ECMP – between 500 kHz and 16 MHz
- ECHP – above 16 MHz

The Oscillator Start-up Timer (OST) is disabled when EC mode is selected. Therefore, there is no delay in operation after a Power-on Reset (POR) or wake-up from Sleep.

Because the PIC® MCU design is fully static, stopping the external clock input will have the effect of halting the device while leaving all data intact. Upon restarting the external clock, the device will resume operation as if no time had elapsed.

FIGURE 2-5: EXTERNAL CLOCK (EC) MODE OPERATION

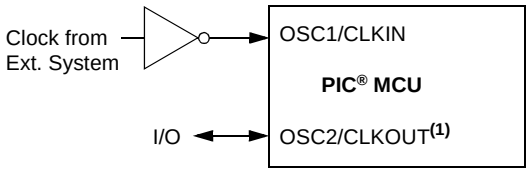

Note 1: Alternate pin functions are listed in **Section 1.0 "Device Overview"**.

© 2010-2016 Microchip Technology Inc.

2.5.3 LP, XT, HS MODES

The LP, XT and HS modes support the use of quartz crystal resonators or ceramic resonators connected to OSC1 and OSC2 (Figure 2-6). The mode selects a low, medium or high gain setting of the internal inverter-amplifier to support various resonator types and speed.

LP Oscillator mode selects the lowest gain setting of the internal inverter-amplifier. LP mode current consumption is the least of the three modes. This mode is best suited to drive resonators with a low drive level specification, for example, tuning fork type crystals.

XT Oscillator mode selects the intermediate gain setting of the internal inverter-amplifier. XT mode current consumption is the medium of the three modes. This mode is best suited to drive resonators with a medium drive level specification.

HS Oscillator mode offers a Medium Power (MP) and a High Power (HP) option selectable by the FOSC<3:0> bits. The MP selections are best suited for oscillator frequencies between 4 MHz and 16 MHz. The HP selection has the highest gain setting of the internal inverter-amplifier and is best suited for frequencies above 16 MHz. HS mode is best suited for resonators that require a high drive setting.

FIGURE 2-6: QUARTZ CRYSTAL OPERATION (LP, XT OR HS MODE)

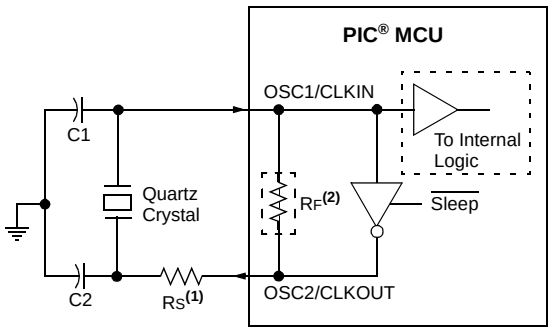

Note 1: A series resistor (R_S) may be required for quartz crystals with low drive level.

2: The value of R_F varies with the Oscillator mode selected (typically between 2 MΩ to 10 MΩ).

Note 1: Quartz crystal characteristics vary according to type, package and manufacturer. The user should consult the manufacturer data sheets for specifications and recommended application.

2: Always verify oscillator performance over the V_{DD} and temperature range that is expected for the application.

3: For oscillator design assistance, refer to the following Microchip Application Notes:

- AN826, "*Crystal Oscillator Basics and Crystal Selection for rfPIC® and PIC® Devices*" (DS00826)
- AN849, "*Basic PIC® Oscillator Design*" (DS00849)
- AN943, "*Practical PIC® Oscillator Analysis and Design*" (DS00943)
- AN949, "*Making Your Oscillator Work*" (DS00949)

FIGURE 2-7: CERAMIC RESONATOR OPERATION (XT OR HS MODE)

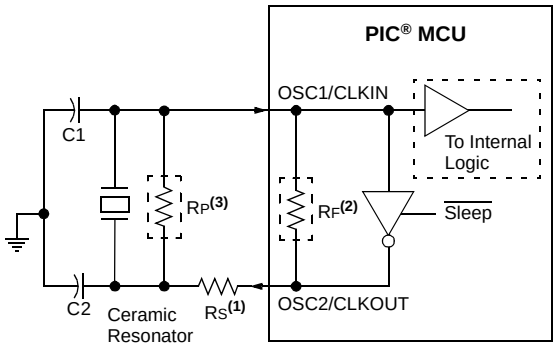

Note 1: A series resistor (R_S) may be required for ceramic resonators with low drive level.

2: The value of R_F varies with the Oscillator mode selected (typically between 2 MΩ to 10 MΩ).

3: An additional parallel feedback resistor (R_P) may be required for proper ceramic resonator operation.

2.5.4 EXTERNAL RC MODES

The external Resistor-Capacitor (RC) modes support the use of an external RC circuit. This allows the designer maximum flexibility in frequency choice while keeping costs to a minimum when clock accuracy is not required. There are two modes: RC and RCIO.

2.5.4.1 RC Mode

In RC mode, the RC circuit connects to OSC1. OSC2/CLKOUT outputs the RC oscillator frequency divided by four. This signal may be used to provide a clock for external circuitry, synchronization, calibration, test or other application requirements. Figure 2-8 shows the external RC mode connections.

FIGURE 2-8: EXTERNAL RC MODES

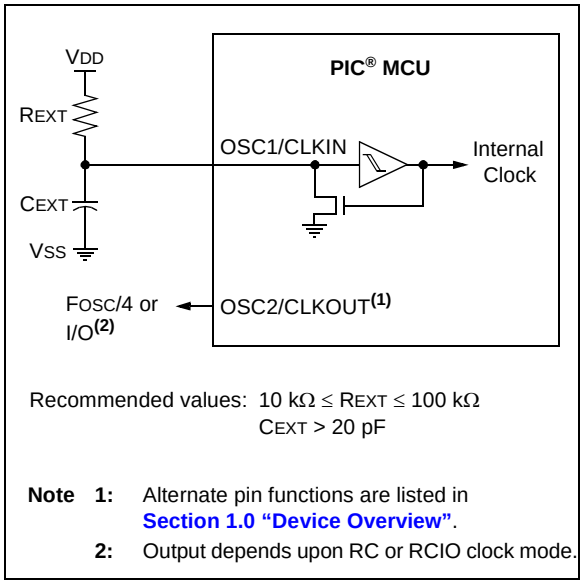

2.5.4.2 RCIO Mode

In RCIO mode, the RC circuit is connected to OSC1. OSC2 becomes a general purpose I/O pin.

The RC oscillator frequency is a function of the supply voltage, the resistor (REXT) and capacitor (CEXT) values and the operating temperature. Other factors affecting the oscillator frequency are:

- input threshold voltage variation
- component tolerances
- packaging variations in capacitance

The user also needs to take into account variation due to tolerance of external RC components used.

2.6 Internal Clock Modes

The oscillator module has three independent, internal oscillators that can be configured or selected as the system clock source.

1. The **HFINTOSC** (High-Frequency Internal Oscillator) is factory calibrated and operates at 16 MHz. The frequency of the HFINTOSC can be user-adjusted via software using the OSCTUNE register (Register 2-3).
2. The **MFINTOSC** (Medium-Frequency Internal Oscillator) is factory calibrated and operates at 500 kHz. The frequency of the MFINTOSC can be user-adjusted via software using the OSCTUNE register (Register 2-3).
3. The **LFINTOSC** (Low-Frequency Internal Oscillator) is factory calibrated and operates at 31.25 kHz. The LFINTOSC cannot be user-adjusted, but is designed to be stable over temperature and voltage.

The system clock speed can be selected via software using the Internal Oscillator Frequency select bits IRCF<2:0> of the OSCCON register.

The system clock can be selected between external or internal clock sources via the System Clock Selection (SCS<1:0>) bits of the OSCCON register. See **Section 2.11 "Clock Switching"** for more information.

2.6.1 INTOSC WITH I/O OR CLOCKOUT

Two of the clock modes selectable with the FOSC<3:0> bits of the CONFIG1H Configuration register configure the internal oscillator block as the primary oscillator. Mode selection determines whether the OSC2/CLKOUT pin will be configured as general purpose I/O or FOSC/4 (CLKOUT). In both modes, the OSC1/CLKIN pin is configured as general purpose I/O. See **Section 24.0 "Special Features of the CPU"** for more information.

The CLKOUT signal may be used to provide a clock for external circuitry, synchronization, calibration, test or other application requirements.

© 2010-2016 Microchip Technology Inc.

2.6.1.1 OSCTUNE Register

The HFINTOSC/MFINTOSC oscillator circuits are factory calibrated but can be adjusted in software by writing to the TUN<5:0> bits of the OSCTUNE register (Register 2-3).

The default value of the TUN<5:0> is '000000'. The value is a 6-bit two's complement number.

When the OSCTUNE register is modified, the HFINTOSC/MFINTOSC frequency will begin shifting to the new frequency. Code execution continues during this shift. There is no indication that the shift has occurred.

The TUN<5:0> bits in OSCTUNE do not affect the LFINTOSC frequency. Operation of features that depend on the LFINTOSC clock source frequency, such as the Power-up Timer (PWRT), Watchdog Timer (WDT), Fail-Safe Clock Monitor (FSCM) and peripherals, are *not* affected by the change in frequency.

The OSCTUNE register also implements the INTSRC and PLLEN bits, which control certain features of the internal oscillator block.

The INTSRC bit allows users to select which internal oscillator provides the clock source when the 31.25 kHz frequency option is selected. This is covered in greater detail in **Section 2.2.3 "Low Frequency Selection"**.

The PLLEN bit controls the operation of the frequency multiplier, PLL, for all primary external clock sources and internal oscillator modes. However, the PLL is intended for operation with clock sources between 4 MHz and 16 MHz. For more details about the function of the PLLEN bit, see **Section 2.8.2 "PLL in HFINTOSC Modes"**

2.7 Register Definitions: Oscillator Tuning

REGISTER 2-3: OSCTUNE: OSCILLATOR TUNING REGISTER

R/W-0	R/W-0	R/W-0	R/W-0	R/W-0	R/W-0	R/W-0	R/W-0
INTSRC	PLLEN(1)	TUN<5:0>					
bit 7							bit 0

Legend:			
R = Readable bit	W = Writable bit	U = Unimplemented bit, read as '0'	
-n = Value at POR	'1' = Bit is set	'0' = Bit is cleared	x = Bit is unknown

bit 7 **INTSRC:** Internal Oscillator Low-Frequency Source Select bit
1 = 31.25 kHz device clock derived from the MFINTOSC or HFINTOSC source
0 = 31.25 kHz device clock derived directly from LFINTOSC internal oscillator

bit 6 **PLLEN:** Frequency Multiplier 4xPLL for HFINTOSC Enable bit(1)
1 = PLL enabled
0 = PLL disabled

bit 5-0 **TUN<5:0>:** Frequency Tuning bits – use to adjust MFINTOSC and HFINTOSC frequencies
011111 = Maximum frequency
011110 =
• • •
000001 =
000000 = Oscillator module (HFINTOSC and MFINTOSC) are running at the factory calibrated frequency.
111111 =
• • •
100000 = Minimum frequency

Note 1: The PLLEN bit is active for all the primary clock sources (internal or external) and is designed to operate with clock frequencies between 4 MHz and 16 MHz.

2.7.1 LFINTOSC

The Low-Frequency Internal Oscillator (LFINTOSC) is a 31.25 kHz internal clock source. The LFINTOSC is not tunable, but is designed to be stable across temperature and voltage. See **Section 27.0 "Electrical Specifications"** for the LFINTOSC accuracy specifications.

The output of the LFINTOSC can be a clock source to the primary clock or the INTOSC clock (see Figure 2-1). The LFINTOSC is also the clock source for the Power-up Timer (PWRT), Watchdog Timer (WDT) and Fail-Safe Clock Monitor (FSCM).

2.7.2 FREQUENCY SELECT BITS (IRCF)

The HFINTOSC (16 MHz) and MFINTOSC (500 MHz) outputs connect to a divide circuit that provides frequencies of 16 MHz to 31.25 kHz. These divide circuit frequencies, along with the 31.25 kHz LFINTOSC output, are multiplexed to provide a single INTOSC clock output (see Figure 2-1). The IRCF<2:0> bits of the OSCCON register, the MFIOSEL bit of the OSCCON2 register and the INTSRC bit of the OSCTUNE register, select the output frequency of the internal oscillators. One of eight frequencies can be selected via software:

- 16 MHz
- 8 MHz
- 4 MHz
- 2 MHz
- 1 MHz (default after Reset)
- 500 kHz (MFINTOSC or HFINTOSC)
- 250 kHz (MFINTOSC or HFINTOSC)
- 31 kHz (LFINTOSC, MFINTOSC or HFINTOSC)

2.7.3 INTOSC FREQUENCY DRIFT

The factory calibrates the internal oscillator block outputs (HFINTOSC/MFINTOSC) for 16 MHz/500 kHz. However, this frequency may drift as V_{DD} or temperature changes. It is possible to adjust the HFINTOSC/MFINTOSC frequency by modifying the value of the TUN<5:0> bits in the OSCTUNE register. This has no effect on the LFINTOSC clock source frequency.

Tuning the HFINTOSC/MFINTOSC source requires knowing when to make the adjustment, in which direction it should be made and, in some cases, how large a change is needed. Three possible compensation techniques are discussed in the following sections. However, other techniques may be used.

2.7.3.1 Compensating with the EUSART

An adjustment may be required when the EUSART begins to generate framing errors or receives data with errors while in Asynchronous mode. Framing errors indicate that the device clock frequency is too high; to adjust for this, decrement the value in OSCTUNE to reduce the clock frequency. On the other hand, errors in data may suggest that the clock speed is too low; to compensate, increment OSCTUNE to increase the clock frequency.

2.7.3.2 Compensating with the Timers

This technique compares device clock speed to some reference clock. Two timers may be used; one timer is clocked by the peripheral clock, while the other is clocked by a fixed reference source, such as the Timer1 oscillator.

Both timers are cleared, but the timer clocked by the reference generates interrupts. When an interrupt occurs, the internally clocked timer is read and both timers are cleared. If the internally clocked timer value is greater than expected, then the internal oscillator block is running too fast. To adjust for this, decrement the OSCTUNE register.

2.7.3.3 Compensating with the CCP Module in Capture Mode

A CCP module can use free running Timer1, Timer3 or Timer5 clocked by the internal oscillator block and an external event with a known period (i.e., AC power frequency). The time of the first event is captured in the CCPRxH:CCPRxL registers and is recorded for use later. When the second event causes a capture, the time of the first event is subtracted from the time of the second event. Since the period of the external event is known, the time difference between events can be calculated.

If the measured time is much greater than the calculated time, the internal oscillator block is running too fast; to compensate, decrement the OSCTUNE register. If the measured time is much less than the calculated time, the internal oscillator block is running too slow; to compensate, increment the OSCTUNE register.

© 2010-2016 Microchip Technology Inc.

2.8 PLL Frequency Multiplier

A Phase-Locked Loop (PLL) circuit is provided as an option for users who wish to use a lower frequency oscillator circuit or to clock the device up to its highest rated frequency from the crystal oscillator. This may be useful for customers who are concerned with EMI due to high-frequency crystals or users who require higher clock speeds from an internal oscillator.

2.8.1 PLL IN EXTERNAL OSCILLATOR MODES

The PLL can be enabled for any of the external oscillator modes using the OSC1/OSC2 pins by either setting the PLLCFG bit (CONFIG1H<4>), or setting the PLLEN bit (OSCTUNE<6>). The PLL is designed for input frequencies of 4 MHz up to 16 MHz. The PLL then multiplies the oscillator output frequency by four to produce an internal clock frequency up to 64 MHz. Oscillator frequencies below 4 MHz should not be used with the PLL.

2.8.2 PLL IN HFINTOSC MODES

The 4x frequency multiplier can be used with the internal oscillator block to produce faster device clock speeds than are normally possible with the internal oscillator. When enabled, the PLL multiplies the HFINTOSC by four to produce clock rates up to 64 MHz.

Unlike external clock modes, when internal clock modes are enabled, the PLL can only be controlled through software. The PLLEN control bit of the OSCTUNE register is used to enable or disable the PLL operation when the HFINTOSC is used.

The PLL is designed for input frequencies of 4 MHz up to 16 MHz.

2.9 Effects of Power-Managed Modes on the Various Clock Sources

For more information about the modes discussed in this section see **Section 3.0 "Power-Managed Modes"**. A quick reference list is also available in Table 3-1.

When PRI_IDLE mode is selected, the designated primary oscillator continues to run without interruption. For all other power-managed modes, the oscillator using the OSC1 pin is disabled. The OSC1 pin (and OSC2 pin, if used by the oscillator) will stop oscillating.

In secondary clock modes (SEC_RUN and SEC_IDLE), the secondary oscillator (SOSC) is operating and providing the device clock. The secondary oscillator may also run in all power-managed modes if required to clock Timer1, Timer3 or Timer5.

In internal oscillator modes (INTOSC_RUN and INTOSC_IDLE), the internal oscillator block provides the device clock source. The 31.25 kHz LFINTOSC output can be used directly to provide the clock and may be enabled to support various special features, regardless of the power-managed mode (see **Section 24.3 "Watchdog Timer (WDT)"**, **Section 2.12 "Two-Speed Clock Start-up Mode"** and **Section 2.13 "Fail-Safe Clock Monitor"** for more information on WDT, Fail-Safe Clock Monitor and Two-Speed Start-up). The HFINTOSC and MFINTOSC outputs may be used directly to clock the device or may be divided down by the postscaler. The HFINTOSC and MFINTOSC outputs are disabled when the clock is provided directly from the LFINTOSC output.

When the Sleep mode is selected, all clock sources are stopped. Since all the transistor switching currents have been stopped, Sleep mode achieves the lowest current consumption of the device (only leakage currents).

Enabling any on-chip feature that will operate during Sleep will increase the current consumed during Sleep. The LFINTOSC is required to support WDT operation. Other features may be operating that do not require a device clock source (i.e., SSP slave, PSP, INTn pins and others). Peripherals that may add significant current consumption are listed in **Section 27.8 "DC Characteristics: Input/Output Characteristics, PIC18(L)F2X/4XK22"**.

2.10 Power-up Delays

Power-up delays are controlled by two timers, so that no external Reset circuitry is required for most applications. The delays ensure that the device is kept in Reset until the device power supply is stable under normal circumstances and the primary clock is operating and stable. For additional information on power-up delays, see **Section 4.6 "Device Reset Timers"**.

The first timer is the Power-up Timer (PWRT), which provides a fixed delay on power-up. It is enabled by clearing (= 0) the $\overline{\text{PWRTEN}}$ Configuration bit.

The second timer is the Oscillator Start-up Timer (OST), intended to keep the chip in Reset until the crystal oscillator is stable (LP, XT and HS modes). The OST does this by counting 1024 oscillator cycles before allowing the oscillator to clock the device.

When the PLL is enabled with external oscillator modes, the device is kept in Reset for an additional 2 ms, following the OST delay, so the PLL can lock to the incoming clock frequency.

There is a delay of interval T_{CSD}, following POR, while the controller becomes ready to execute instructions. This delay runs concurrently with any other delays. This may be the only delay that occurs when any of the EC, RC or INTIOSC modes are used as the primary clock source.

When the HFINTOSC is selected as the primary clock, the main system clock can be delayed until the HFINTOSC is stable. This is user selectable by the HFOFST bit of the CONFIG3H Configuration register. When the HFOFST bit is cleared, the main system clock is delayed until the HFINTOSC is stable. When the HFOFST bit is set, the main system clock starts immediately.

In either case, the HFIOFS bit of the OSCCON register can be read to determine whether the HFINTOSC is operating and stable.

© 2010-2016 Microchip Technology Inc.

TABLE 2-3: OSC1 AND OSC2 PIN STATES IN SLEEP MODE

OSC Mode	OSC1 Pin	OSC2 Pin
RC, INTOSC with CLKOUT	Floating, external resistor should pull high	At logic low (clock/4 output)
RC with IO	Floating, external resistor should pull high	Configured as PORTA, bit 6
INTOSC with IO	Configured as PORTA, bit 7	Configured as PORTA, bit 6
EC with IO	Floating, pulled by external clock	Configured as PORTA, bit 6
EC with CLKOUT	Floating, pulled by external clock	At logic low (clock/4 output)
LP, XT, HS	Feedback inverter disabled at quiescent voltage level	Feedback inverter disabled at quiescent voltage level

Note: See Table 4-2 in **Section 4.0 "Reset"** for time-outs due to Sleep and $\overline{\text{MCLR}}$ Reset.

2.11 Clock Switching

The system clock source can be switched between external and internal clock sources via software using the System Clock Select (SCS<1:0>) bits of the OSCCON register.

PIC18(L)F2X/4XK22 devices contain circuitry to prevent clock "glitches" when switching between clock sources. A short pause in the device clock occurs during the clock switch. The length of this pause is the sum of two cycles of the old clock source and three to four cycles of the new clock source. This formula assumes that the new clock source is stable.

Clock transitions are discussed in greater detail in **Section 3.1.2 "Entering Power-Managed Modes"**.

2.11.1 SYSTEM CLOCK SELECT (SCS<1:0>) BITS

The System Clock Select (SCS<1:0>) bits of the OSCCON register select the system clock source that is used for the CPU and peripherals.

- When SCS<1:0> = `00`, the system clock source is determined by configuration of the FOSC<3:0> bits in the CONFIG1H Configuration register.
- When SCS<1:0> = `10`, the system clock source is chosen by the internal oscillator frequency selected by the INTSRC bit of the OSCTUNE register, the MFIOSEL bit of the OSCCON2 register and the IRCF<2:0> bits of the OSCCON register.
- When SCS<1:0> = `01`, the system clock source is the 32.768 kHz secondary oscillator shared with Timer1, Timer3 and Timer5.

After a Reset, the SCS<1:0> bits of the OSCCON register are always cleared.

Note: Any automatic clock switch, which may occur from Two-Speed Start-up or Fail-Safe Clock Monitor, does not update the SCS<1:0> bits of the OSCCON register. The user can monitor the SOSCRUN, MFIOFS and LFIOFS bits of the OSCCON2 register, and the HFIOFS and OSTS bits of the OSCCON register to determine the current system clock source.

2.11.2 OSCILLATOR START-UP TIME-OUT STATUS (OSTS) BIT

The Oscillator Start-up Time-out Status (OSTS) bit of the OSCCON register indicates whether the system clock is running from the external clock source, as defined by the FOSC<3:0> bits in the CONFIG1H Configuration register, or from the internal clock source. In particular, when the primary oscillator is the source of the primary clock, OSTS indicates that the Oscillator Start-up Timer (OST) has timed out for LP, XT or HS modes.

2.11.3 CLOCK SWITCH TIMING

When switching between one oscillator and another, the new oscillator may not be operating which saves power (see Figure 2-9). If this is the case, there is a delay after the SCS<1:0> bits of the OSCCON register are modified before the frequency change takes place. The OSTS and IOFS bits of the OSCCON register will reflect the current active status of the external and HFINTOSC oscillators. The timing of a frequency selection is as follows:

1. SCS<1:0> bits of the OSCCON register are modified.
2. The old clock continues to operate until the new clock is ready.
3. Clock switch circuitry waits for two consecutive rising edges of the old clock after the new clock ready signal goes true.
4. The system clock is held low starting at the next falling edge of the old clock.
5. Clock switch circuitry waits for an additional two rising edges of the new clock.
6. On the next falling edge of the new clock the low hold on the system clock is released and new clock is switched in as the system clock.
7. Clock switch is complete.

See Figure 2-1 for more details.

If the HFINTOSC is the source of both the old and new frequency, there is no start-up delay before the new frequency is active. This is because the old and new frequencies are derived from the HFINTOSC via the postscaler and multiplexer.

Start-up delay specifications are located in **Section 27.0 "Electrical Specifications"**, under AC Specifications (Oscillator Module).

2.12 Two-Speed Clock Start-up Mode

Two-Speed Start-up mode provides additional power savings by minimizing the latency between external oscillator start-up and code execution. In applications that make heavy use of the Sleep mode, Two-Speed Start-up will remove the external oscillator start-up time from the time spent awake and can reduce the overall power consumption of the device.

This mode allows the application to wake-up from Sleep, perform a few instructions using the HFINTOSC as the clock source and go back to Sleep without waiting for the primary oscillator to become stable.

Note:	Executing a `SLEEP` instruction will abort the oscillator start-up time and will cause the OSTS bit of the OSCCON register to remain clear.

When the oscillator module is configured for LP, XT or HS modes, the Oscillator Start-up Timer (OST) is enabled (see **Section 2.5.1 "Oscillator Start-up Timer (OST)"**). The OST will suspend program execution until 1024 oscillations are counted. Two-Speed Start-up mode minimizes the delay in code execution by operating from the internal oscillator as the OST is counting. When the OST count reaches 1024 and the OSTS bit of the OSCCON register is set, program execution switches to the external oscillator.

2.12.1 TWO-SPEED START-UP MODE CONFIGURATION

Two-Speed Start-up mode is enabled when all of the following settings are configured as noted:

- Two-Speed Start-up mode is enabled when the IESO of the CONFIG1H Configuration register is set.
- SCS<1:0> (of the OSCCON register) = `00`.
- FOSC<2:0> bits of the CONFIG1H Configuration register are configured for LP, XT or HS mode.

Two-Speed Start-up mode becomes active after:

- Power-on Reset (POR) and, if enabled, after Power-up Timer (PWRT) has expired, or
- Wake-up from Sleep.

© 2010-2016 Microchip Technology Inc.

2.12.2 TWO-SPEED START-UP SEQUENCE

1. Wake-up from Power-on Reset or Sleep.
2. Instructions begin executing by the internal oscillator at the frequency set in the IRCF<2:0> bits of the OSCCON register.
3. OST enabled to count 1024 external clock cycles.
4. OST timed out. External clock is ready.
5. OSTS is set.
6. Clock switch finishes according to Figure 2-9

2.12.3 CHECKING TWO-SPEED CLOCK STATUS

Checking the state of the OSTS bit of the OSCCON register will confirm if the microcontroller is running from the external clock source, as defined by the FOSC<2:0> bits in CONFIG1H Configuration register, or the internal oscillator. OSTS = `0` when the external oscillator is not ready, which indicates that the system is running from the internal oscillator.

FIGURE 2-9: CLOCK SWITCH TIMING

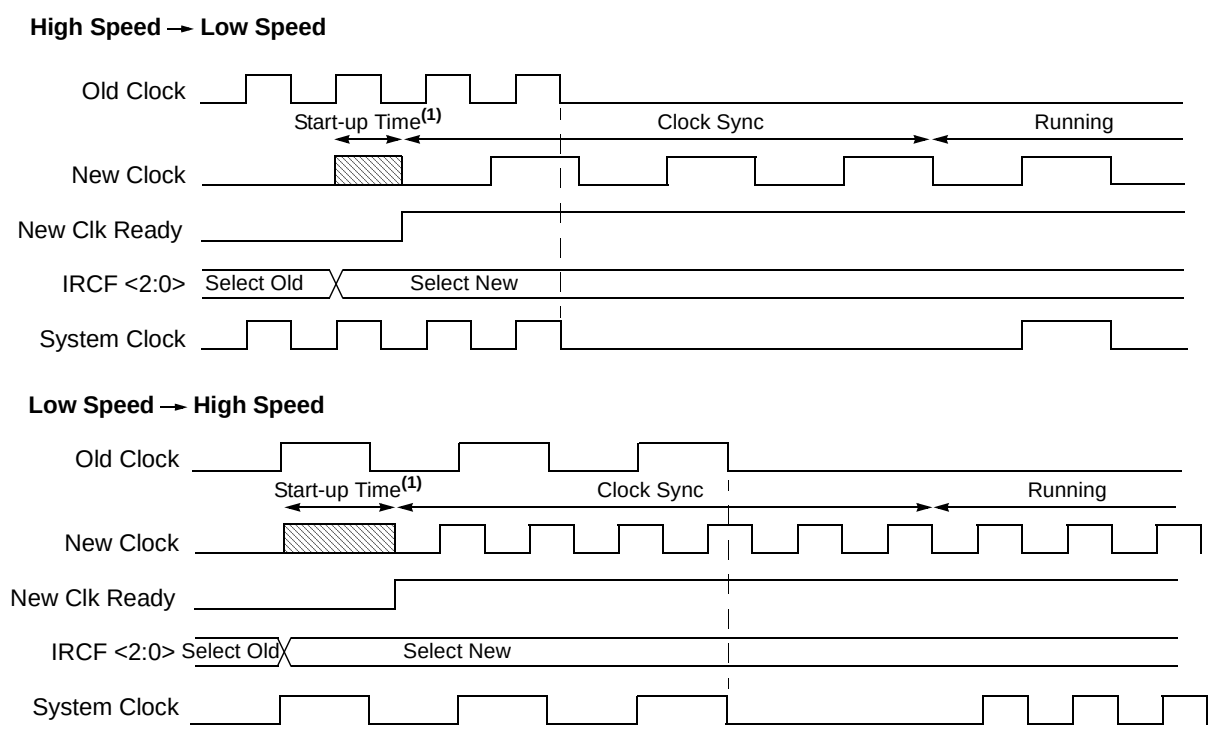

Note 1: Start-up time includes TOST (1024 TOSC) for external clocks, plus TPLL (approx. 2 ms) for HSPLL mode.

2.13 Fail-Safe Clock Monitor

The Fail-Safe Clock Monitor (FSCM) allows the device to continue operating should the external oscillator fail. The FSCM can detect oscillator failure any time after the Oscillator Start-up Timer (OST) has expired. The FSCM is enabled by setting the FCMEN bit in the CONFIG1H Configuration register. The FSCM is applicable to all external oscillator modes (LP, XT, HS, EC, RC and RCIO).

FIGURE 2-10: FSCM BLOCK DIAGRAM

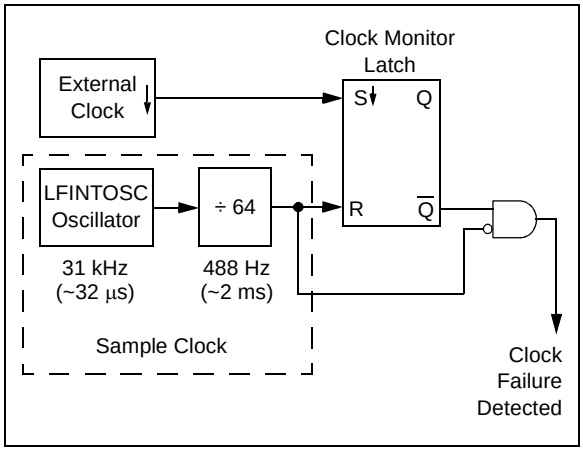

2.13.1 FAIL-SAFE DETECTION

The FSCM module detects a failed oscillator by comparing the external oscillator to the FSCM sample clock. The sample clock is generated by dividing the LFINTOSC by 64 (see Figure 2-10). Inside the fail detector block is a latch. The external clock sets the latch on each falling edge of the external clock. The sample clock clears the latch on each rising edge of the sample clock. A failure is detected when an entire half-cycle of the sample clock elapses before the primary clock goes low.

2.13.2 FAIL-SAFE OPERATION

When the external clock fails, the FSCM switches the device clock to an internal clock source and sets the bit flag OSCFIF of the PIR2 register. The OSCFIF flag will generate an interrupt if the OSCFIE bit of the PIE2 register is also set. The device firmware can then take steps to mitigate the problems that may arise from a failed clock. The system clock will continue to be sourced from the internal clock source until the device firmware successfully restarts the external oscillator and switches back to external operation. An automatic transition back to the failed clock source will not occur.

The internal clock source chosen by the FSCM is determined by the IRCF<2:0> bits of the OSCCON register. This allows the internal oscillator to be configured before a failure occurs.

2.13.3 FAIL-SAFE CONDITION CLEARING

The Fail-Safe condition is cleared by either one of the following:

- Any Reset
- By toggling the SCS1 bit of the OSCCON register

Both of these conditions restart the OST. While the OST is running, the device continues to operate from the INTOSC selected in OSCCON. When the OST times out, the Fail-Safe condition is cleared and the device automatically switches over to the external clock source. The Fail-Safe condition need not be cleared before the OSCFIF flag is cleared.

2.13.4 RESET OR WAKE-UP FROM SLEEP

The FSCM is designed to detect an oscillator failure after the Oscillator Start-up Timer (OST) has expired. The OST is used after waking up from Sleep and after any type of Reset. The OST is not used with the EC or RC Clock modes so that the FSCM will be active as soon as the Reset or wake-up has completed.

Note:	Due to the wide range of oscillator start-up times, the Fail-Safe circuit is not active during oscillator start-up (i.e., after exiting Reset or Sleep). After an appropriate amount of time, the user should check the OSTS bit of the OSCCON register to verify the oscillator start-up and that the system clock switchover has successfully completed.

Note:	When the device is configured for Fail-Safe clock monitoring in either HS, XT, or LS Oscillator modes then the IESO configuration bit should also be set so that the clock will automatically switch from the internal clock to the external oscillator when the OST times out.

© 2010-2016 Microchip Technology Inc.

FIGURE 2-11: FSCM TIMING DIAGRAM

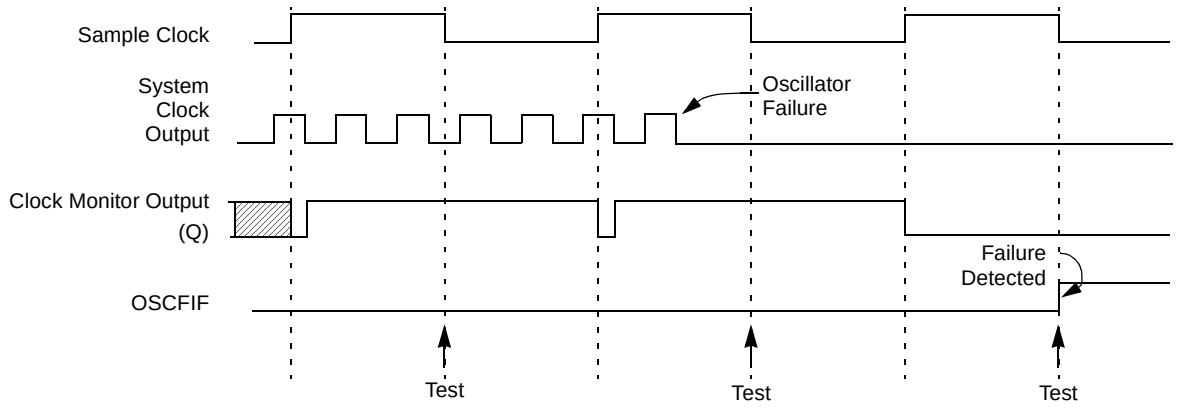

Note: The system clock is normally at a much higher frequency than the sample clock. The relative frequencies in this example have been chosen for clarity.

TABLE 2-4: REGISTERS ASSOCIATED WITH CLOCK SOURCES

Name	Bit 7	Bit 6	Bit 5	Bit 4	Bit 3	Bit 2	Bit 1	Bit 0	Register on Page
INTCON	GIE/GIEH	PEIE/GIEL	TMR0IE	INT0IE	RBIE	TMR0IF	INT0IF	RBIF	109
IPR2	OSCFIP	C1IP	C2IP	EEIP	BCL1IP	HLVDIP	TMR3IP	CCP2IP	122
OSCCON	IDLEN	IRCF<2:0>			OSTS	HFIOFS	SCS<1:0>		30
OSCCON2	PLLRDY	SOSCRUN	—	MFIOSEL	SOSCGO	PRISD	MFIOFS	LFIOFS	31
OSCTUNE	INTSRC	PLLEN	TUN<5:0>						35
PIE2	OSCFIE	C1IE	C2IE	EEIE	BCL1IE	HLVDIE	TMR3IE	CCP2IE	118
PIR2	OSCFIF	C1IF	C2IF	EEIF	BCL1IF	HLVDIF	TMR3IF	CCP2IF	113

Legend: — = unimplemented locations, read as ‘0’. Shaded bits are not used by clock sources.

TABLE 2-5: CONFIGURATION REGISTERS ASSOCIATED WITH CLOCK SOURCES

Name	Bit 7	Bit 6	Bit 5	Bit 4	Bit 3	Bit 2	Bit 1	Bit 0	Register on Page
CONFIG1H	IESO	FCMEN	PRICLKEN	PLLCFG	FOSC<3:0>				345
CONFIG2L	—	—	—	BORV<1:0>		BOREN<1:0>		$\overline{\text{PWRTEN}}$	346
CONFIG3H	MCLRE	—	P2BMX	T3CMX	HFOFST	CCP3MX	PBADEN	CCP2MX	348

Legend: — = unimplemented locations, read as ‘0’. Shaded bits are not used for clock sources.

3.0 POWER-MANAGED MODES

PIC18(L)F2X/4XK22 devices offer a total of seven operating modes for more efficient power management. These modes provide a variety of options for selective power conservation in applications where resources may be limited (i.e., battery-powered devices).

There are three categories of power-managed modes:

- Run modes
- Idle modes
- Sleep mode

These categories define which portions of the device are clocked and sometimes, what speed. The Run and Idle modes may use any of the three available clock sources (primary, secondary or internal oscillator block). The Sleep mode does not use a clock source.

The power-managed modes include several power-saving features offered on previous PIC® microcontroller devices. One of the clock switching features allows the controller to use the secondary oscillator (SOSC) in place of the primary oscillator. Also included is the Sleep mode, offered by all PIC microcontroller devices, where all device clocks are stopped.

3.1 Selecting Power-Managed Modes

Selecting a power-managed mode requires two decisions:

- Whether or not the CPU is to be clocked
- The selection of a clock source

The IDLEN bit (OSCCON<7>) controls CPU clocking, while the SCS<1:0> bits (OSCCON<1:0>) select the clock source. The individual modes, bit settings, clock sources and affected modules are summarized in Table 3-1.

3.1.1 CLOCK SOURCES

The SCS<1:0> bits allow the selection of one of three clock sources for power-managed modes. They are:

- the primary clock, as defined by the FOSC<3:0> Configuration bits
- the secondary clock (the SOSC oscillator)
- the internal oscillator block

3.1.2 ENTERING POWER-MANAGED MODES

Switching from one power-managed mode to another begins by loading the OSCCON register. The SCS<1:0> bits select the clock source and determine which Run or Idle mode is to be used. Changing these bits causes an immediate switch to the new clock source, assuming that it is running. The switch may also be subject to clock transition delays. Refer to **Section 2.11 "Clock Switching"** for more information.

Entry to the power-managed Idle or Sleep modes is triggered by the execution of a SLEEP instruction. The actual mode that results depends on the status of the IDLEN bit.

Depending on the current mode and the mode being switched to, a change to a power-managed mode does not always require setting all of these bits. Many transitions may be done by changing the oscillator select bits, or changing the IDLEN bit, prior to issuing a SLEEP instruction. If the IDLEN bit is already configured correctly, it may only be necessary to perform a SLEEP instruction to switch to the desired mode.

TABLE 3-1: POWER-MANAGED MODES

Mode	OSCCON Bits		Module Clocking		Available Clock and Oscillator Source
	IDLEN(1)	SCS<1:0>	CPU	Peripherals	
Sleep	0	N/A	Off	Off	None – All clocks are disabled
PRI_RUN	N/A	00	Clocked	Clocked	Primary – LP, XT, HS, RC, EC and Internal Oscillator Block(2). This is the normal full-power execution mode.
SEC_RUN	N/A	01	Clocked	Clocked	Secondary – SOSC Oscillator
RC_RUN	N/A	1x	Clocked	Clocked	Internal Oscillator Block(2)
PRI_IDLE	1	00	Off	Clocked	Primary – LP, XT, HS, HSPLL, RC, EC
SEC_IDLE	1	01	Off	Clocked	Secondary – SOSC Oscillator
RC_IDLE	1	1x	Off	Clocked	Internal Oscillator Block(2)

Note 1: IDLEN reflects its value when the SLEEP instruction is executed.

2: Includes HFINTOSC and HFINTOSC postscaler, as well as the LFINTOSC source.

© 2010-2016 Microchip Technology Inc.

3.1.3 MULTIPLE FUNCTIONS OF THE SLEEP COMMAND

The power-managed mode that is invoked with the SLEEP instruction is determined by the value of the IDLEN bit at the time the instruction is executed. If IDLEN = 0, when SLEEP is executed, the device enters the Sleep mode and all clocks stop and minimum power is consumed. If IDLEN = 1, when SLEEP is executed, the device enters the IDLE mode and the system clock continues to supply a clock to the peripherals but is disconnected from the CPU.

3.2 Run Modes

In the Run modes, clocks to both the core and peripherals are active. The difference between these modes is the clock source.

3.2.1 PRI_RUN MODE

The PRI_RUN mode is the normal, full-power execution mode of the microcontroller. This is also the default mode upon a device Reset, unless Two-Speed Start-up is enabled (see **Section 2.12 "Two-Speed Clock Start-up Mode"** for details). In this mode, the device is operated off the oscillator defined by the FOSC<3:0> bits of the CONFIG1H Configuration register.

3.2.2 SEC_RUN MODE

In SEC_RUN mode, the CPU and peripherals are clocked from the secondary external oscillator. This gives users the option of lower power consumption while still using a high accuracy clock source.

SEC_RUN mode is entered by setting the SCS<1:0> bits to '01'. When SEC_RUN mode is active, all of the following are true:

- The device clock source is switched to the SOSC oscillator (see Figure 3-1)
- The primary oscillator is shut down
- The SOSCRUN bit (OSCCON2<6>) is set
- The OSTS bit (OSCCON2<3>) is cleared

Note:	The secondary external oscillator should already be running prior to entering SEC_RUN mode. If the SOSCGO bit or any of the TxSOSCEN bits are not set when the SCS<1:0> bits are set to '01', entry to SEC_RUN mode will not occur until SOSCGO bit is set and secondary external oscillator is ready.

On transitions from SEC_RUN mode to PRI_RUN mode, the peripherals and CPU continue to be clocked from the SOSC oscillator, while the primary clock is started. When the primary clock becomes ready, a clock switch back to the primary clock occurs (see Figure 3-2). When the clock switch is complete, the SOSCRUN bit is cleared, the OSTS bit is set and the primary clock is providing the clock. The IDLEN and SCS bits are not affected by the wake-up and the SOSC oscillator continues to run.

3.2.3 RC_RUN MODE

In RC_RUN mode, the CPU and peripherals are clocked from the internal oscillator block using the INTOSC multiplexer. In this mode, the primary clock is shut down. When using the LFINTOSC source, this mode provides the best power conservation of all the Run modes, while still executing code. It works well for user applications which are not highly timing-sensitive or do not require high-speed clocks at all times. If the primary clock source is the internal oscillator block – either LFINTOSC or INTOSC (MFINTOSC or HFINTOSC) – there are no distinguishable differences between the PRI_RUN and RC_RUN modes during execution. Entering or exiting RC_RUN mode, however, causes a clock switch delay. Therefore, if the primary clock source is the internal oscillator block, using RC_RUN mode is not recommended.

This mode is entered by setting the SCS1 bit to '1'. To maintain software compatibility with future devices, it is recommended that the SCS0 bit also be cleared, even though the bit is ignored. When the clock source is switched to the INTOSC multiplexer (see Figure 3-1), the primary oscillator is shut down and the OSTS bit is cleared. The IRCF<2:0> bits (OSCCON<6:4>) may be modified at any time to immediately change the clock speed.

When the IRCF bits and the INTSRC bit are all clear, the INTOSC output (HFINTOSC/MFINTOSC) is not enabled and the HFIOFS and MFIOFS bits will remain clear. There will be no indication of the current clock source. The LFINTOSC source is providing the device clocks.

If the IRCF bits are changed from all clear (thus, enabling the INTOSC output) or if INTSRC or MFIOSEL is set, then the HFIOFS or MFIOFS bit is set after the INTOSC output becomes stable. For details, see Table 3-2.

Clocks to the device continue while the INTOSC source stabilizes after an interval of TIOBST.

If the IRCF bits were previously at a non-zero value, or if INTSRC was set before setting SCS1 and the INTOSC source was already stable, then the HFIOFS or MFIOFS bit will remain set.

On transitions from RC_RUN mode to PRI_RUN mode, the device continues to be clocked from the INTOSC multiplexer while the primary clock is started. When the primary clock becomes ready, a clock switch to the primary clock occurs (see Figure 3-3). When the clock switch is complete, the HFIOFS or MFIOFS bit is cleared, the OSTS bit is set and the primary clock is providing the device clock. The IDLEN and SCS bits are not affected by the switch. The LFINTOSC source will continue to run if either the WDT or the Fail-Safe Clock Monitor is enabled.

FIGURE 3-1: TRANSITION TIMING FOR ENTRY TO SEC_RUN MODE

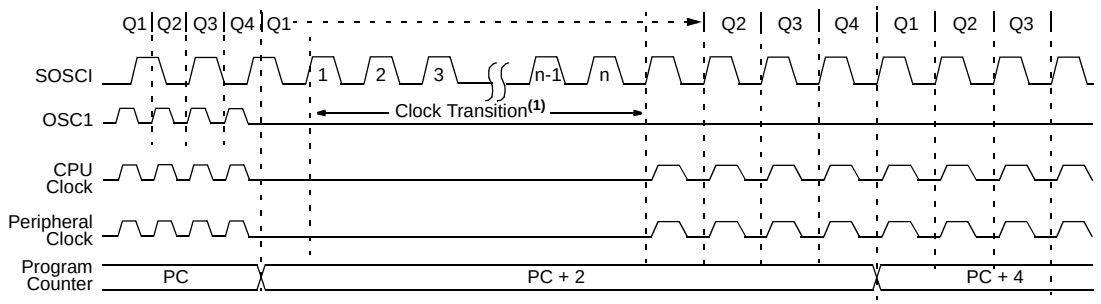

Note 1: Clock transition typically occurs within 2-4 TOSC.

FIGURE 3-2: TRANSITION TIMING FROM SEC_RUN MODE TO PRI_RUN MODE (HSPLL)

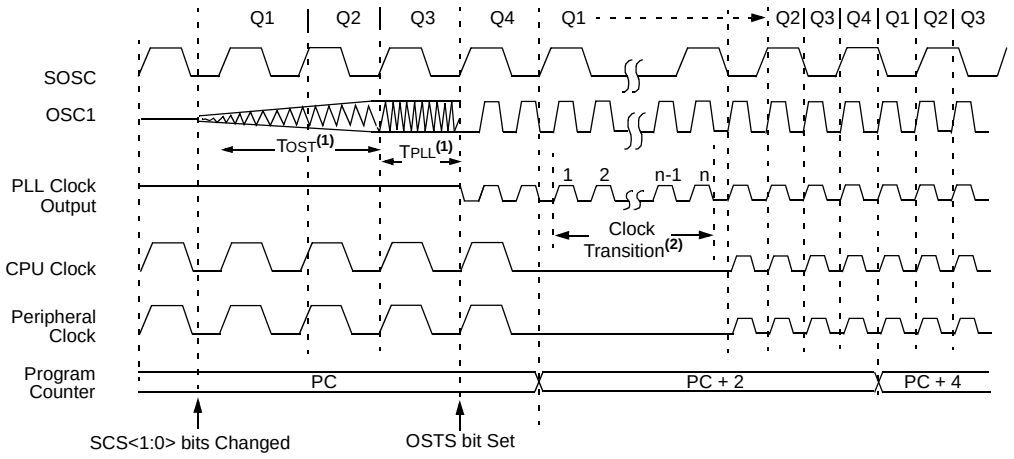

Note 1: TOST = 1024 TOSC; TPLL = 2 ms (approx). These intervals are not shown to scale.
2: Clock transition typically occurs within 2-4 TOSC.

© 2010-2016 Microchip Technology Inc.

TABLE 3-2: INTERNAL OSCILLATOR FREQUENCY STABILITY BITS

IRCF<2:0>	INTSRC	MFIOSEL	Selected Oscillator	Selected Oscillator Stable when:
000	0	x	LFINTOSC	LFIOFS = 1
000	1	0	HFINTOSC	HFIOFS = 1
000	1	1	MFINTOSC	MFIOFS = 1
010 or 001	x	0	HFINTOSC	HFIOFS = 1
010 or 001	x	1	MFINTOSC	MFIOFS = 1
011 – 111	x	x	HFINTOSC	HFIOFS = 1

FIGURE 3-3: TRANSITION TIMING FROM RC_RUN MODE TO PRI_RUN MODE

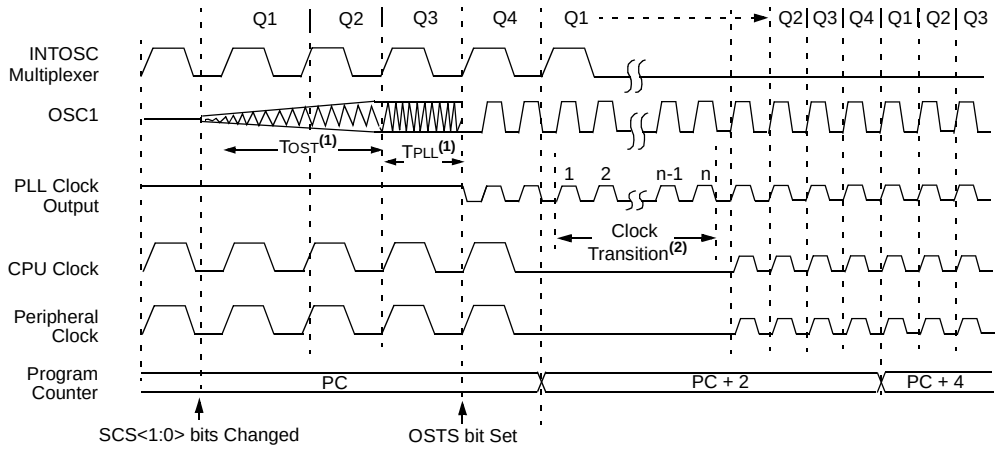

Note 1: TOST = 1024 TOSC; TPLL = 2 ms (approx). These intervals are not shown to scale.

2: Clock transition typically occurs within 2-4 TOSC.

3.3 Sleep Mode

The Power-Managed Sleep mode in the PIC18(L)F2X/4XK22 devices is identical to the legacy Sleep mode offered in all other PIC microcontroller devices. It is entered by clearing the IDLEN bit of the OSCCON register and executing the SLEEP instruction. This shuts down the selected oscillator (Figure 3-4) and all clock source Status bits are cleared.

Entering the Sleep mode from either Run or Idle mode does not require a clock switch. This is because no clocks are needed once the controller has entered Sleep. If the WDT is selected, the LFINTOSC source will continue to operate. If the SOSC oscillator is enabled, it will also continue to run.

When a wake event occurs in Sleep mode (by interrupt, Reset or WDT time-out), the device will not be clocked until the clock source selected by the SCS<1:0> bits becomes ready (see Figure 3-5), or it will be clocked from the internal oscillator block if either the Two-Speed Start-up or the Fail-Safe Clock Monitor are enabled (see **Section 24.0 "Special Features of the CPU"**). In either case, the OSTS bit is set when the primary clock is providing the device clocks. The IDLEN and SCS bits are not affected by the wake-up.

3.4 Idle Modes

The Idle modes allow the controller's CPU to be selectively shut down while the peripherals continue to operate. Selecting a particular Idle mode allows users to further manage power consumption.

If the IDLEN bit is set to a '1' when a SLEEP instruction is executed, the peripherals will be clocked from the clock source selected by the SCS<1:0> bits; however, the CPU will not be clocked. The clock source status bits are not affected. Setting IDLEN and executing a SLEEP instruction provides a quick method of switching from a given Run mode to its corresponding Idle mode.

If the WDT is selected, the LFINTOSC source will continue to operate. If the SOSC oscillator is enabled, it will also continue to run.

Since the CPU is not executing instructions, the only exits from any of the Idle modes are by interrupt, WDT time-out, or a Reset. When a wake event occurs, CPU execution is delayed by an interval of TCSD while it becomes ready to execute code. When the CPU begins executing code, it resumes with the same clock source for the current Idle mode. For example, when waking from RC_IDLE mode, the internal oscillator block will clock the CPU and peripherals (in other words, RC_RUN mode). The IDLEN and SCS bits are not affected by the wake-up.

While in any Idle mode or the Sleep mode, a WDT time-out will result in a WDT wake-up to the Run mode currently specified by the SCS<1:0> bits.

FIGURE 3-4: TRANSITION TIMING FOR ENTRY TO SLEEP MODE

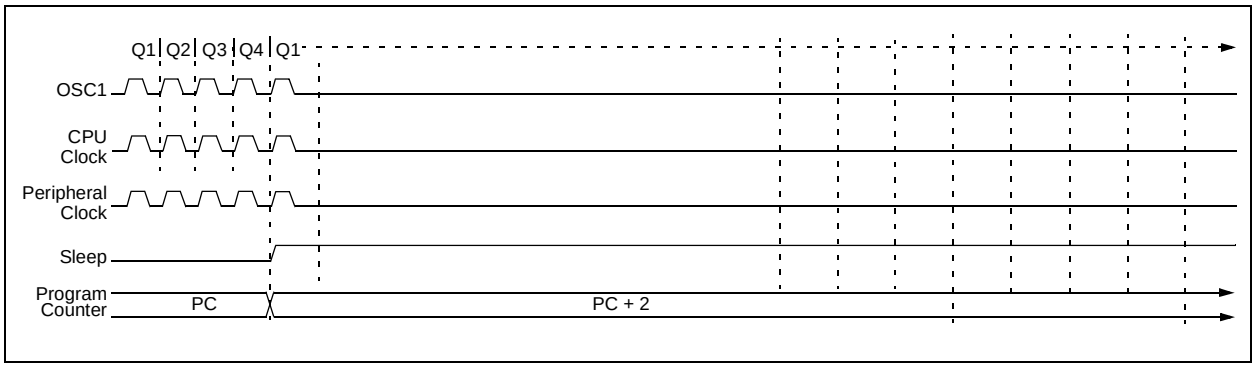

© 2010-2016 Microchip Technology Inc.

FIGURE 3-5: TRANSITION TIMING FOR WAKE FROM SLEEP (HSPLL)

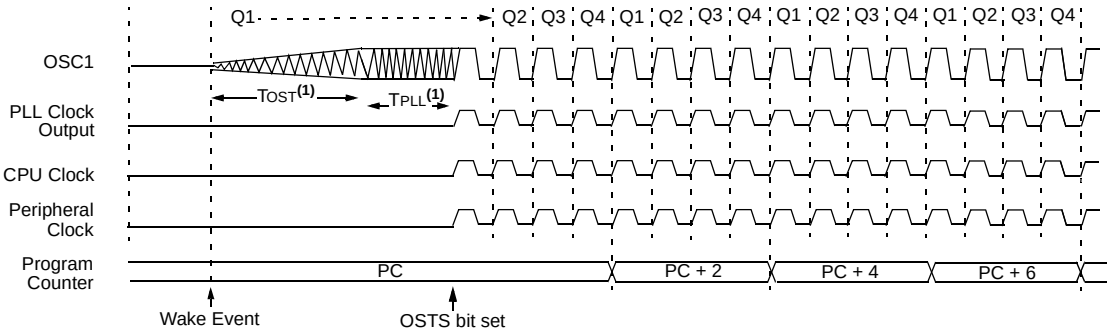

Note 1: TOST = 1024 TOSC; TPLL = 2 ms (approx). These intervals are not shown to scale.

3.4.1 PRI_IDLE MODE

This mode is unique among the three low-power Idle modes, in that it does not disable the primary device clock. For timing sensitive applications, this allows for the fastest resumption of device operation with its more accurate primary clock source, since the clock source does not have to “warm-up” or transition from another oscillator.

PRI_IDLE mode is entered from PRI_RUN mode by setting the IDLEN bit and executing a SLEEP instruction. If the device is in another Run mode, set IDLEN first, then clear the SCS bits and execute SLEEP. Although the CPU is disabled, the peripherals continue to be clocked from the primary clock source specified by the FOSC<3:0> Configuration bits. The OSTS bit remains set (see Figure 3-6).

When a wake event occurs, the CPU is clocked from the primary clock source. A delay of interval TCSD is required between the wake event and when code execution starts. This is required to allow the CPU to become ready to execute instructions. After the wake-up, the OSTS bit remains set. The IDLEN and SCS bits are not affected by the wake-up (see Figure 3-7).

3.4.2 SEC_IDLE MODE

In SEC_IDLE mode, the CPU is disabled but the peripherals continue to be clocked from the SOSC oscillator. This mode is entered from SEC_RUN by setting the IDLEN bit and executing a SLEEP instruction. If the device is in another Run mode, set the IDLEN bit first, then set the SCS<1:0> bits to ‘01’ and execute SLEEP. When the clock source is switched to the SOSC oscillator, the primary oscillator is shut down, the OSTS bit is cleared and the SOSCRUN bit is set.

When a wake event occurs, the peripherals continue to be clocked from the SOSC oscillator. After an interval of TCSD following the wake event, the CPU begins executing code being clocked by the SOSC oscillator. The IDLEN and SCS bits are not affected by the wake-up; the SOSC oscillator continues to run (see Figure 3-7).

> **Note:** The SOSC oscillator should already be running prior to entering SEC_IDLE mode. At least one of the secondary oscillator enable bits (SOSCGO, T1SOSCEN, T3SOSCEN or T5SOSCEN) must be set when the SLEEP instruction is executed. Otherwise, the main system clock will continue to operate in the previously selected mode and the corresponding IDLE mode will be entered (i.e., PRI_IDLE or RC_IDLE).

FIGURE 3-6: TRANSITION TIMING FOR ENTRY TO IDLE MODE

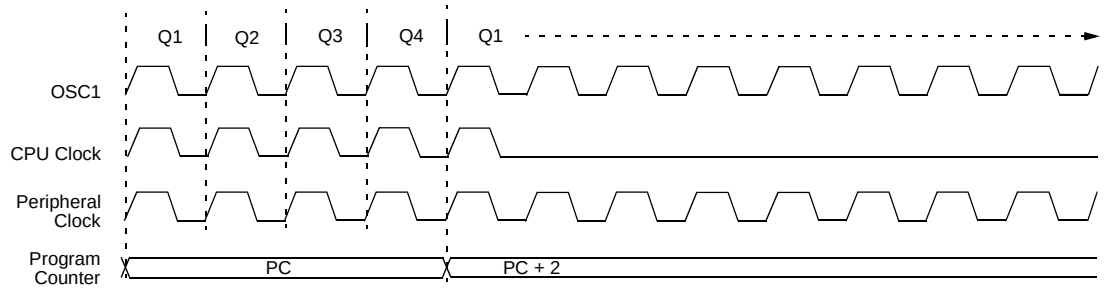

FIGURE 3-7: TRANSITION TIMING FOR WAKE FROM IDLE TO RUN MODE

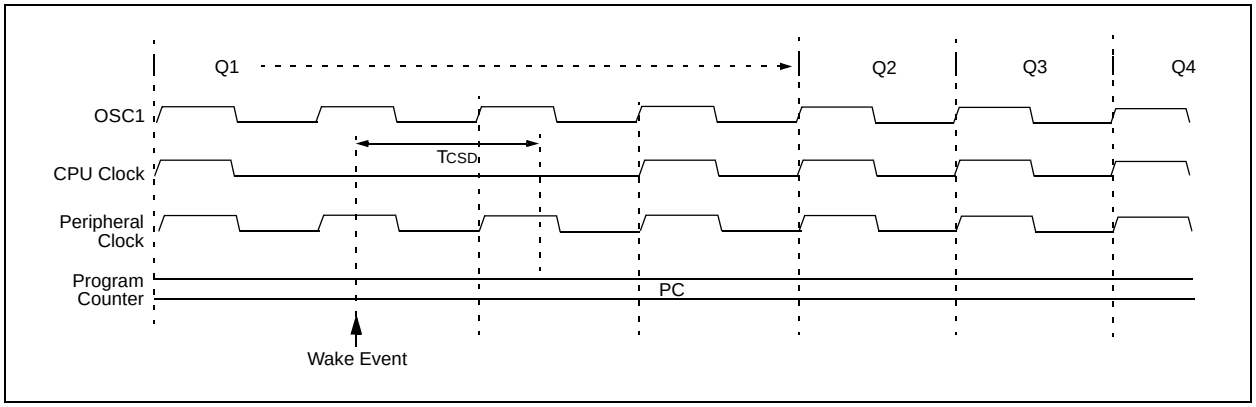

3.4.3 RC_IDLE MODE

In RC_IDLE mode, the CPU is disabled but the peripherals continue to be clocked from the internal oscillator block from the HFINTOSC multiplexer output. This mode allows for controllable power conservation during Idle periods.

From RC_RUN, this mode is entered by setting the IDLEN bit and executing a SLEEP instruction. If the device is in another Run mode, first set IDLEN, then set the SCS1 bit and execute SLEEP. It is recommended that SCS0 also be cleared, although its value is ignored, to maintain software compatibility with future devices. The HFINTOSC multiplexer may be used to select a higher clock frequency by modifying the IRCF bits before executing the SLEEP instruction. When the clock source is switched to the HFINTOSC multiplexer, the primary oscillator is shut down and the OSTS bit is cleared.

If the IRCF bits are set to any non-zero value, or either the INTSRC or MFIOSEL bits are set, the HFINTOSC output is enabled. Either the HFIOFS or the MFIOFS bits become set, after the HFINTOSC output stabilizes after an interval of TIOBST. For information on the HFIOFS and MFIOFS bits, see Table 3-2.

Clocks to the peripherals continue while the HFINTOSC source stabilizes. The HFIOFS and MFIOFS bits will remain set if the IRCF bits were previously set at a non-zero value or if INTSRC was set before the SLEEP instruction was executed and the HFINTOSC source was already stable. If the IRCF bits and INTSRC are all clear, the HFINTOSC output will not be enabled, the HFIOFS and MFIOFS bits will remain clear and there will be no indication of the current clock source.

When a wake event occurs, the peripherals continue to be clocked from the HFINTOSC multiplexer output. After a delay of TCSD following the wake event, the CPU begins executing code being clocked by the HFINTOSC multiplexer. The IDLEN and SCS bits are not affected by the wake-up. The LFINTOSC source will continue to run if either the WDT or the Fail-Safe Clock Monitor is enabled.

© 2010-2016 Microchip Technology Inc.

3.5 Exiting Idle and Sleep Modes

An exit from Sleep mode or any of the Idle modes is triggered by any one of the following:

- an interrupt
- a Reset
- a Watchdog Time-out

This section discusses the triggers that cause exits from power-managed modes. The clocking subsystem actions are discussed in each of the power-managed modes (see **Section 3.2 "Run Modes"**, **Section 3.3 "Sleep Mode"** and **Section 3.4 "Idle Modes"**).

3.5.1 EXIT BY INTERRUPT

Any of the available interrupt sources can cause the device to exit from an Idle mode or the Sleep mode to a Run mode. To enable this functionality, an interrupt source must be enabled by setting its enable bit in one of the INTCON or PIE registers. The exit sequence is initiated when the corresponding interrupt flag bit is set.

The instruction immediately following the `SLEEP` instruction is executed on all exits by interrupt from Idle or Sleep modes. Code execution then branches to the interrupt vector if the GIE/GIEH bit of the INTCON register is set, otherwise code execution continues without branching (see **Section 9.0 "Interrupts"**).

A fixed delay of interval TCSD following the wake event is required when leaving Sleep and Idle modes. This delay is required for the CPU to prepare for execution. Instruction execution resumes on the first clock cycle following this delay.

3.5.2 EXIT BY WDT TIME-OUT

A WDT time-out will cause different actions depending on which power-managed mode the device is in when the time-out occurs.

If the device is not executing code (all Idle modes and Sleep mode), the time-out will result in an exit from the power-managed mode (see **Section 3.2 "Run Modes"** and **Section 3.3 "Sleep Mode"**). If the device is executing code (all Run modes), the time-out will result in a WDT Reset (see **Section 24.3 "Watchdog Timer (WDT)"**).

The WDT timer and postscaler are cleared by any one of the following:

- executing a `SLEEP` instruction
- executing a `CLRWDT` instruction
- the loss of the currently selected clock source when the Fail-Safe Clock Monitor is enabled
- modifying the IRCF bits in the OSCCON register when the internal oscillator block is the device clock source

3.5.3 EXIT BY RESET

Exiting Sleep and Idle modes by Reset causes code execution to restart at address '0'. See **Section 4.0 "Reset"** for more details.

The exit delay time from Reset to the start of code execution depends on both the clock sources before and after the wake-up and the type of oscillator.

3.5.4 EXIT WITHOUT AN OSCILLATOR START-UP DELAY

Certain exits from power-managed modes do not invoke the OST at all. There are two cases:

- PRI_IDLE mode, where the primary clock source is not stopped and
- the primary clock source is not any of the LP, XT, HS or HSPLL modes.

In these instances, the primary clock source either does not require an oscillator start-up delay since it is already running (PRI_IDLE), or normally does not require an oscillator start-up delay (RC, EC, INTOSC, and INTOSCIO modes). However, a fixed delay of interval TCSD following the wake event is still required when leaving Sleep and Idle modes to allow the CPU to prepare for execution. Instruction execution resumes on the first clock cycle following this delay.

3.6 Selective Peripheral Module Control

Idle mode allows users to substantially reduce power consumption by stopping the CPU clock. Even so, peripheral modules still remain clocked, and thus, consume power. There may be cases where the application needs what IDLE mode does not provide: the allocation of power resources to the CPU processing with minimal power consumption from the peripherals. PIC18(L)F2X/4XK22 family devices address this requirement by allowing peripheral modules to be selectively disabled, reducing or eliminating their power consumption. This can be done with control bits in the Peripheral Module Disable (PMD) registers. These bits generically named XXXMD are located in control registers PMD0, PMD1 or PMD2.

Setting the PMD bit for a module disables all clock sources to that module, reducing its power consumption to an absolute minimum. In this state, power to the control and status registers associated with the peripheral is removed. Writes to these registers have no effect and read values are invalid. Clearing a set PMD bit restores power to the associated control and status registers, thereby setting those registers to their default values.

3.7 Register Definitions: Peripheral Module Disable

REGISTER 3-1: PMD0: PERIPHERAL MODULE DISABLE REGISTER 0

R/W-0	R/W-0	R/W-0	R/W-0	R/W-0	R/W-0	R/W-0	R/W-0
UART2MD	UART1MD	TMR6MD	TMR5MD	TMR4MD	TMR3MD	TMR2MD	TMR1MD
bit 7							bit 0

Legend:			
R = Readable bit	W = Writable bit	U = Unimplemented bit, read as ‘0’	
-n = Value at POR	‘1’ = Bit is set	‘0’ = Bit is cleared	x = Bit is unknown

bit 7 **UART2MD:** UART2 Peripheral Module Disable Control bit
1 = Module is disabled, Clock Source is disconnected, module does not draw digital power
0 = Module is enabled, Clock Source is connected, module draws digital power

bit 6 **UART1MD:** UART1 Peripheral Module Disable Control bit
1 = Module is disabled, Clock Source is disconnected, module does not draw digital power
0 = Module is enabled, Clock Source is connected, module draws digital power

bit 5 **TMR6MD:** Timer6 Peripheral Module Disable Control bit
1 = Module is disabled, Clock Source is disconnected, module does not draw digital power
0 = Module is enabled, Clock Source is connected, module draws digital power

bit 4 **TMR5MD:** Timer5 Peripheral Module Disable Control bit
1 = Module is disabled, Clock Source is disconnected, module does not draw digital power
0 = Module is enabled, Clock Source is connected, module draws digital power

bit 3 **TMR4MD:** Timer4 Peripheral Module Disable Control bit
1 = Module is disabled, Clock Source is disconnected, module does not draw digital power
0 = Module is enabled, Clock Source is connected, module draws digital power

bit 2 **TMR3MD:** Timer3 Peripheral Module Disable Control bit
1 = Module is disabled, Clock Source is disconnected, module does not draw digital power
0 = Module is enabled, Clock Source is connected, module draws digital power

bit 1 **TMR2MD:** Timer2 Peripheral Module Disable Control bit
1 = Module is disabled, Clock Source is disconnected, module does not draw digital power
0 = Module is enabled, Clock Source is connected, module draws digital power

bit 0 **TMR1MD:** Timer1 Peripheral Module Disable Control bit
1 = Module is disabled, Clock Source is disconnected, module does not draw digital power
0 = Module is enabled, Clock Source is connected, module draws digital power

© 2010-2016 Microchip Technology Inc.

REGISTER 3-2: PMD1: PERIPHERAL MODULE DISABLE REGISTER 1

R/W-0	R/W-0	U-0	R/W-0	R/W-0	R/W-0	R/W-0	R/W-0
MSSP2MD	MSSP1MD	—	CCP5MD	CCP4MD	CCP3MD	CCP2MD	CCP1MD
bit 7							bit 0

Legend:			
R = Readable bit	W = Writable bit	U = Unimplemented bit, read as ‘0’	
-n = Value at POR	‘1’ = Bit is set	‘0’ = Bit is cleared	x = Bit is unknown

bit 7 **MSSP2MD:** MSSP2 Peripheral Module Disable Control bit
1 = Module is disabled, Clock Source is disconnected, module does not draw digital power
0 = Module is enabled, Clock Source is connected, module draws digital power

bit 6 **MSSP1MD:** MSSP1 Peripheral Module Disable Control bit
1 = Module is disabled, Clock Source is disconnected, module does not draw digital power
0 = Module is enabled, Clock Source is connected, module draws digital power

bit 5 **Unimplemented:** Read as ‘0’

bit 4 **CCP5MD:** CCP5 Peripheral Module Disable Control bit
1 = Module is disabled, Clock Source is disconnected, module does not draw digital power
0 = Module is enabled, Clock Source is connected, module draws digital power

bit 3 **CCP4MD:** CCP4 Peripheral Module Disable Control bit
1 = Module is disabled, Clock Source is disconnected, module does not draw digital power
0 = Module is enabled, Clock Source is connected, module draws digital power

bit 2 **CCP3MD:** CCP3 Peripheral Module Disable Control bit
1 = Module is disabled, Clock Source is disconnected, module does not draw digital power
0 = Module is enabled, Clock Source is connected, module draws digital power

bit 1 **CCP2MD:** CCP2 Peripheral Module Disable Control bit
1 = Module is disabled, Clock Source is disconnected, module does not draw digital power
0 = Module is enabled, Clock Source is connected, module draws digital power

bit 0 **CCP1MD:** CCP1 Peripheral Module Disable Control bit
1 = Module is disabled, Clock Source is disconnected, module does not draw digital power
0 = Module is enabled, Clock Source is connected, module draws digital power

REGISTER 3-3: PMD2: PERIPHERAL MODULE DISABLE REGISTER 2

U-0	U-0	U-0	U-0	R/W-0	R/W-0	R/W-0	R/W-0
—	—	—	—	CTMUMD	CMP2MD	CMP1MD	ADCMD
bit 7							bit 0

Legend:			
R = Readable bit	W = Writable bit	U = Unimplemented bit, read as ‘0’	
-n = Value at POR	‘1’ = Bit is set	‘0’ = Bit is cleared	x = Bit is unknown

bit 7-4 **Unimplemented:** Read as ‘0’

bit 3 **CTMUMD:** CTMU Peripheral Module Disable Control bit
1 = Module is disabled, Clock Source is disconnected, module does not draw digital power
0 = Module is enabled, Clock Source is connected, module draws digital power

bit 2 **CMP2MD:** Comparator C2 Peripheral Module Disable Control bit
1 = Module is disabled, Clock Source is disconnected, module does not draw digital power
0 = Module is enabled, Clock Source is connected, module draws digital power

bit 1 **CMP1MD:** Comparator C1 Peripheral Module Disable Control bit
1 = Module is disabled, Clock Source is disconnected, module does not draw digital power
0 = Module is enabled, Clock Source is connected, module draws digital power

bit 0 **ADCMD:** ADC Peripheral Module Disable Control bit
1 = Module is disabled, Clock Source is disconnected, module does not draw digital power
0 = Module is enabled, Clock Source is connected, module draws digital power

© 2010-2016 Microchip Technology Inc.

4.0 RESET

The PIC18(L)F2X/4XK22 devices differentiate between various kinds of Reset:

a) Power-on Reset (POR)
b) $\overline{\text{MCLR}}$ Reset during normal operation
c) $\overline{\text{MCLR}}$ Reset during power-managed modes
d) Watchdog Timer (WDT) Reset (during execution)
e) Programmable Brown-out Reset (BOR)
f) RESET Instruction
g) Stack Full Reset
h) Stack Underflow Reset

This section discusses Resets generated by $\overline{\text{MCLR}}$, POR and BOR and covers the operation of the various start-up timers. Stack Reset events are covered in **Section 5.2.0.1 "Stack Full and Underflow Resets"**. WDT Resets are covered in **Section 24.3 "Watchdog Timer (WDT)"**.

A simplified block diagram of the On-Chip Reset Circuit is shown in Figure 4-1.

4.1 RCON Register

Device Reset events are tracked through the RCON register (Register 4-1). The lower five bits of the register indicate that a specific Reset event has occurred. In most cases, these bits can only be cleared by the event and must be set by the application after the event. The state of these flag bits, taken together, can be read to indicate the type of Reset that just occurred. This is described in more detail in **Section 4.7 "Reset State of Registers"**.

The RCON register also has control bits for setting interrupt priority (IPEN) and software control of the BOR (SBOREN). Interrupt priority is discussed in **Section 9.0 "Interrupts"**. BOR is covered in **Section 4.5 "Brown-out Reset (BOR)"**.

FIGURE 4-1: SIMPLIFIED BLOCK DIAGRAM OF ON-CHIP RESET CIRCUIT

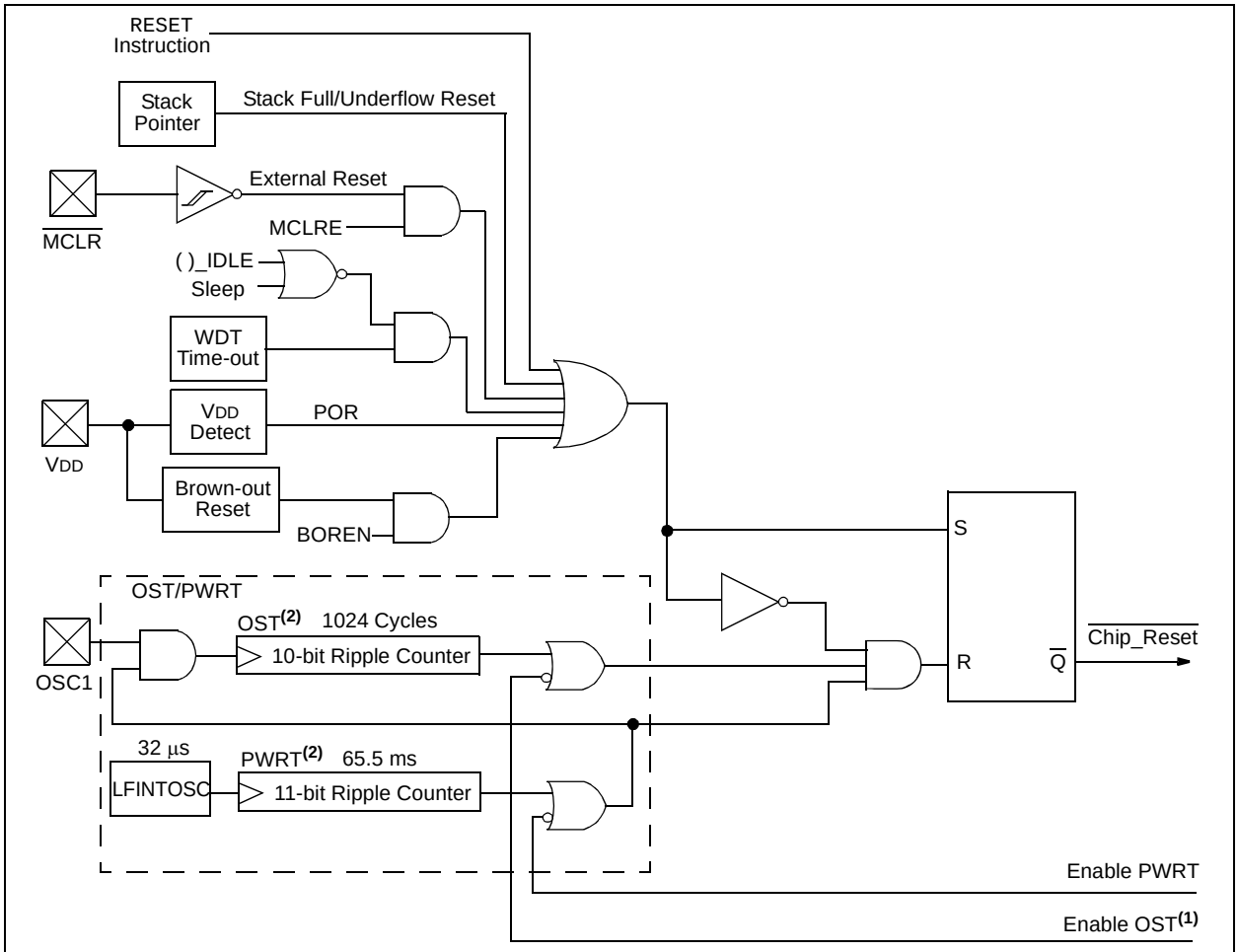

Note 1: See Table 4-2 for time-out situations.

2: PWRT and OST counters are reset by POR and BOR. See Sections 4.4 and 4.5.

4.2 Register Definitions: Reset Control

REGISTER 4-1: RCON: RESET CONTROL REGISTER

R/W-0/0	R/W-q/u	U-0	R/W-1/q	R-1/q	R-1/q	R/W-q/u	R/W-0/q
IPEN	SBOREN(1)	—	$\overline{\text{RI}}$	$\overline{\text{TO}}$	$\overline{\text{PD}}$	$\overline{\text{POR}}$(2)	$\overline{\text{BOR}}$
bit 7							bit 0

Legend:		
R = Readable bit	W = Writable bit	U = Unimplemented bit, read as ‘0’
‘1’ = Bit is set	‘0’ = Bit is cleared	-n/n = Value at POR and BOR/Value at all other Resets
x = Bit is unknown	u = unchanged	q = depends on condition

bit 7 **IPEN:** Interrupt Priority Enable bit
1 = Enable priority levels on interrupts
0 = Disable priority levels on interrupts (PIC16CXXX Compatibility mode)

bit 6 **SBOREN:** BOR Software Enable bit(1)
If BOREN<1:0> = 01:
1 = BOR is enabled
0 = BOR is disabled
If BOREN<1:0> = 00, 10 or 11:
Bit is disabled and read as ‘0’.

bit 5 **Unimplemented:** Read as ‘0’

bit 4 **$\overline{\text{RI}}$:** RESET Instruction Flag bit
1 = The RESET instruction was not executed (set by firmware or Power-on Reset)
0 = The RESET instruction was executed causing a device Reset (must be set in firmware after a code-executed Reset occurs)

bit 3 **$\overline{\text{TO}}$:** Watchdog Time-out Flag bit
1 = Set by power-up, CLRWDT instruction or SLEEP instruction
0 = A WDT time-out occurred

bit 2 **$\overline{\text{PD}}$:** Power-down Detection Flag bit
1 = Set by power-up or by the CLRWDT instruction
0 = Set by execution of the SLEEP instruction

bit 1 **$\overline{\text{POR}}$:** Power-on Reset Status bit(2)
1 = No Power-on Reset occurred
0 = A Power-on Reset occurred (must be set in software after a Power-on Reset occurs)

bit 0 **$\overline{\text{BOR}}$:** Brown-out Reset Status bit(3)
1 = A Brown-out Reset has not occurred (set by firmware only)
0 = A Brown-out Reset occurred (must be set by firmware after a POR or Brown-out Reset occurs)

Note 1: When CONFIG2L[2:1] = 01, then the SBOREN Reset state is ‘1’; otherwise, it is ‘0’.
2: The actual Reset value of $\overline{\text{POR}}$ is determined by the type of device Reset. See the notes following this register and **Section 4.7 “Reset State of Registers”** for additional information.
3: See Table 4-1.

Note 1: Brown-out Reset is indicated when $\overline{\text{BOR}}$ is ‘0’ and POR is ‘1’ (assuming that both $\overline{\text{POR}}$ and $\overline{\text{BOR}}$ were set to ‘1’ by firmware immediately after POR).
2: It is recommended that the $\overline{\text{POR}}$ bit be set after a Power-on Reset has been detected so that subsequent Power-on Resets may be detected.

© 2010-2016 Microchip Technology Inc.

4.3 Master Clear ($\overline{\text{MCLR}}$)

The $\overline{\text{MCLR}}$ pin provides a method for triggering an external Reset of the device. A Reset is generated by holding the pin low. These devices have a noise filter in the $\overline{\text{MCLR}}$ Reset path which detects and ignores small pulses. An internal weak pull-up is enabled when the pin is configured as the $\overline{\text{MCLR}}$ input.

The $\overline{\text{MCLR}}$ pin is not driven low by any internal Resets, including the WDT.

In PIC18(L)F2X/4XK22 devices, the $\overline{\text{MCLR}}$ input can be disabled with the MCLRE Configuration bit. When $\overline{\text{MCLR}}$ is disabled, the pin becomes a digital input. See **Section 10.6 "PORTE Registers"** for more information.

4.4 Power-on Reset (POR)

A Power-on Reset pulse is generated on-chip whenever VDD rises above a certain threshold. This allows the device to start in the initialized state when VDD is adequate for operation.

To take advantage of the POR circuitry either leave the pin floating, or tie the $\overline{\text{MCLR}}$ pin through a resistor to VDD. This will eliminate external RC components usually needed to create a Power-on Reset delay. A minimum rise rate for VDD is specified. For a slow rise time, see Figure 4-2.

When the device starts normal operation (i.e., exits the Reset condition), device operating parameters (voltage, frequency, temperature, etc.) must be met to ensure proper operation. If these conditions are not met, the device must be held in Reset until the operating conditions are met.

POR events are captured by the $\overline{\text{POR}}$ bit of the RCON register. The state of the bit is set to '0' whenever a POR occurs; it does not change for any other Reset event. $\overline{\text{POR}}$ is not reset to '1' by any hardware event. To capture multiple events, the user must manually set the bit to '1' by software following any POR.

FIGURE 4-2: EXTERNAL POWER-ON RESET CIRCUIT (FOR SLOW VDD POWER-UP)

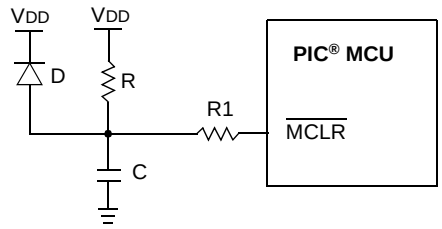

Note 1: External Power-on Reset circuit is required only if the VDD power-up slope is too slow. The diode D helps discharge the capacitor quickly when VDD powers down.

2: 15 kΩ < R < 40 kΩ is recommended to make sure that the voltage drop across R does not violate the device's electrical specification.

3: R1 ≥ 1 kΩ will limit any current flowing into $\overline{\text{MCLR}}$ from external capacitor C, in the event of $\overline{\text{MCLR}}$/VPP pin breakdown, due to Electrostatic Discharge (ESD) or Electrical Overstress (EOS).

4.5 Brown-out Reset (BOR)

PIC18(L)F2X/4XK22 devices implement a BOR circuit that provides the user with a number of configuration and power-saving options. The BOR is controlled by the BORV<1:0> and BOREN<1:0> bits of the CONFIG2L Configuration register. There are a total of four BOR configurations which are summarized in Table 4-1.

The BOR threshold is set by the BORV<1:0> bits. If BOR is enabled (any values of BOREN<1:0>, except ‘00’), any drop of V_{DD} below V_{BOR} for greater than T_{BOR} will reset the device. A Reset may or may not occur if V_{DD} falls below V_{BOR} for less than T_{BOR}. The chip will remain in Brown-out Reset until V_{DD} rises above V_{BOR}.

If the Power-up Timer is enabled, it will be invoked after V_{DD} rises above V_{BOR}; it then will keep the chip in Reset for an additional time delay, T_{PWRT}. If V_{DD} drops below V_{BOR} while the Power-up Timer is running, the chip will go back into a Brown-out Reset and the Power-up Timer will be initialized. Once V_{DD} rises above V_{BOR}, the Power-up Timer will execute the additional time delay.

BOR and the Power-on Timer (PWRT) are independently configured. Enabling BOR Reset does not automatically enable the PWRT.

The BOR circuit has an output that feeds into the POR circuit and rearms the POR within the operating range of the BOR. This early rearming of the POR ensures that the device will remain in Reset in the event that V_{DD} falls below the operating range of the BOR circuitry.

4.5.1 DETECTING BOR

When BOR is enabled, the $\overline{BOR}$ bit always resets to ‘0’ on any BOR or POR event. This makes it difficult to determine if a BOR event has occurred just by reading the state of $\overline{BOR}$ alone. A more reliable method is to simultaneously check the state of both $\overline{POR}$ and $\overline{BOR}$. This assumes that the $\overline{POR}$ and $\overline{BOR}$ bits are reset to ‘1’ by software immediately after any POR event. If $\overline{BOR}$ is ‘0’ while $\overline{POR}$ is ‘1’, it can be reliably assumed that a BOR event has occurred.

4.5.2 SOFTWARE ENABLED BOR

When BOREN<1:0> = 01, the BOR can be enabled or disabled by the user in software. This is done with the SBOREN control bit of the RCON register. Setting SBOREN enables the BOR to function as previously described. Clearing SBOREN disables the BOR entirely. The SBOREN bit operates only in this mode; otherwise it is read as ‘0’.

Placing the BOR under software control gives the user the additional flexibility of tailoring the application to the environment without having to reprogram the device to change BOR configuration. It also allows the user to tailor device power consumption in software by eliminating the incremental current that the BOR consumes. While the BOR current is typically very small, it may have some impact in low-power applications.

Note:	Even when BOR is under software control, the BOR Reset voltage level is still set by the BORV<1:0> Configuration bits. It cannot be changed by software.

4.5.3 DISABLING BOR IN SLEEP MODE

When BOREN<1:0> = 10, the BOR remains under hardware control and operates as previously described. Whenever the device enters Sleep mode, however, the BOR is automatically disabled. When the device returns to any other operating mode, BOR is automatically re-enabled.

This mode allows for applications to recover from brown-out situations, while actively executing code, when the device requires BOR protection the most. At the same time, it saves additional power in Sleep mode by eliminating the small incremental BOR current.

4.5.4 MINIMUM BOR ENABLE TIME

Enabling the BOR also enables the Fixed Voltage Reference (FVR) when no other peripheral requiring the FVR is active. The BOR becomes active only after the FVR stabilizes. Therefore, to ensure BOR protection, the FVR settling time must be considered when enabling the BOR in software or when the BOR is automatically enabled after waking from Sleep. If the BOR is disabled, in software or by reentering Sleep before the FVR stabilizes, the BOR circuit will not sense a BOR condition. The FVRST bit of the VREFCON0 register can be used to determine FVR stability.

© 2010-2016 Microchip Technology Inc.

TABLE 4-1: BOR CONFIGURATIONS

BOR Configuration		Status of SBOREN (RCON<6>)	BOR Operation
BOREN1	BOREN0		
0	0	Unavailable	BOR disabled; must be enabled by reprogramming the Configuration bits.
0	1	Available	BOR enabled by software; operation controlled by SBOREN.
1	0	Unavailable	BOR enabled by hardware in Run and Idle modes, disabled during Sleep mode.
1	1	Unavailable	BOR enabled by hardware; must be disabled by reprogramming the Configuration bits.

4.6 Device Reset Timers

PIC18(L)F2X/4XK22 devices incorporate three separate on-chip timers that help regulate the Power-on Reset process. Their main function is to ensure that the device clock is stable before code is executed. These timers are:

- Power-up Timer (PWRT)
- Oscillator Start-up Timer (OST)
- PLL Lock Time-out

4.6.1 POWER-UP TIMER (PWRT)

The Power-up Timer (PWRT) of PIC18(L)F2X/4XK22 devices is an 11-bit counter which uses the LFINTOSC source as the clock input. This yields an approximate time interval of 2048 x 32 μs = 65.6 ms. While the PWRT is counting, the device is held in Reset.

The power-up time delay depends on the LFINTOSC clock and will vary from chip-to-chip due to temperature and process variation.

The PWRT is enabled by clearing the $\overline{\text{PWRTEN}}$ Configuration bit.

4.6.2 OSCILLATOR START-UP TIMER (OST)

The Oscillator Start-up Timer (OST) provides a 1024 oscillator cycle (from OSC1 input) delay after the PWRT delay is over. This ensures that the crystal oscillator or resonator has started and stabilized.

The OST time-out is invoked only for XT, LP and HS modes and only on Power-on Reset, or on exit from all power-managed modes that stop the external oscillator.

4.6.3 PLL LOCK TIME-OUT

With the PLL enabled, the time-out sequence following a Power-on Reset is slightly different from other oscillator modes. A separate timer is used to provide a fixed time-out that is sufficient for the PLL to lock to the main oscillator frequency. This PLL lock time-out (T_{PLL}) is typically 2 ms and follows the oscillator start-up time-out.

4.6.4 TIME-OUT SEQUENCE

On power-up, the time-out sequence is as follows:

1. After the POR pulse has cleared, PWRT time-out is invoked (if enabled).
2. Then, the OST is activated.

The total time-out will vary based on oscillator configuration and the status of the PWRT. Figure 4-3, Figure 4-4, Figure 4-5, Figure 4-6 and Figure 4-7 all depict time-out sequences on power-up, with the Power-up Timer enabled and the device operating in HS Oscillator mode. Figures 4-3 through 4-6 also apply to devices operating in XT or LP modes. For devices in RC mode and with the PWRT disabled, on the other hand, there will be no time-out at all.

Since the time-outs occur from the POR pulse, if $\overline{\text{MCLR}}$ is kept low long enough, all time-outs will expire, after which, bringing $\overline{\text{MCLR}}$ high will allow program execution to begin immediately (Figure 4-5). This is useful for testing purposes or to synchronize more than one PIC® MCU device operating in parallel.

TABLE 4-2: TIME-OUT IN VARIOUS SITUATIONS

Oscillator Configuration	Power-up[2] and Brown-out		Exit from Power-Managed Mode
	$\overline{\text{PWRTEN}}$ = 0	$\overline{\text{PWRTEN}}$ = 1	
HSPLL	66 ms[1] + 1024 TOSC + 2 ms[2]	1024 TOSC + 2 ms[2]	1024 TOSC + 2 ms[2]
HS, XT, LP	66 ms[1] + 1024 TOSC	1024 TOSC	1024 TOSC
EC, ECIO	66 ms[1]	—	—
RC, RCIO	66 ms[1]	—	—
INTIO1, INTIO2	66 ms[1]	—	—

Note 1: 66 ms (65.5 ms) is the nominal Power-up Timer (PWRT) delay.
2: 2 ms is the nominal time required for the PLL to lock.

FIGURE 4-3: TIME-OUT SEQUENCE ON POWER-UP ($\overline{\text{MCLR}}$ TIED TO VDD, VDD RISE < TPWRT)

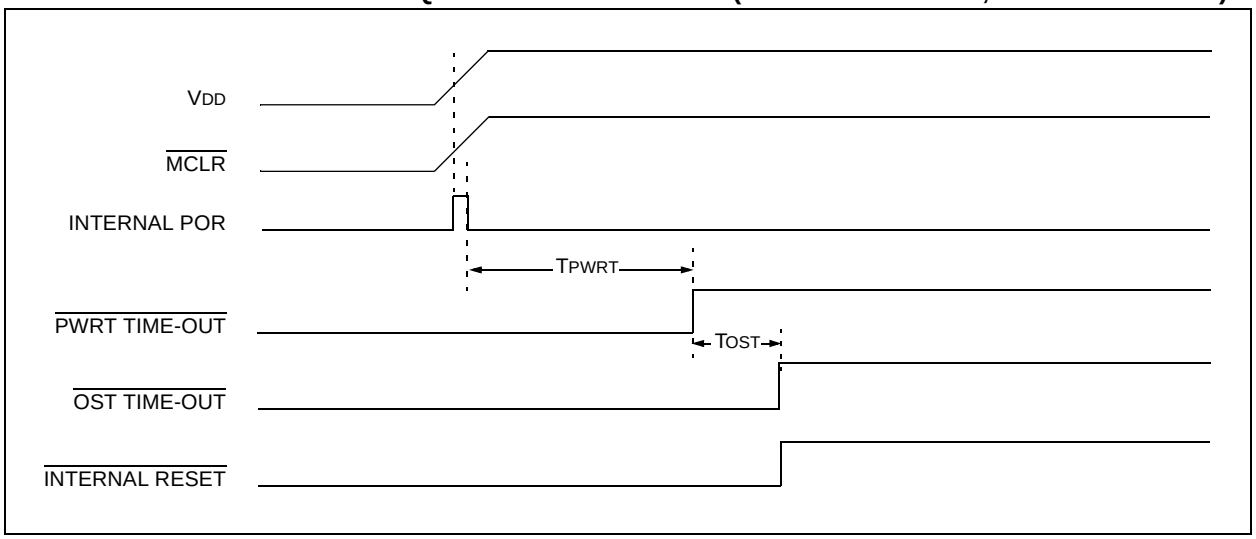

FIGURE 4-4: TIME-OUT SEQUENCE ON POWER-UP ($\overline{\text{MCLR}}$ NOT TIED TO VDD): CASE 1

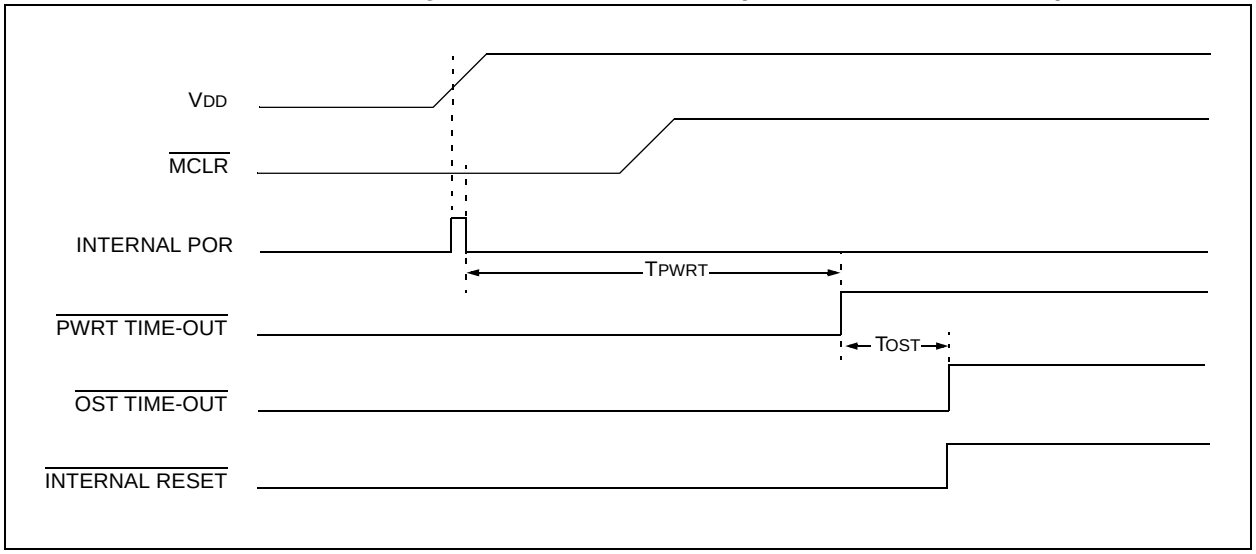

© 2010-2016 Microchip Technology Inc.

FIGURE 4-5: TIME-OUT SEQUENCE ON POWER-UP ($\overline{MCLR}$ NOT TIED TO V_{DD}): CASE 2

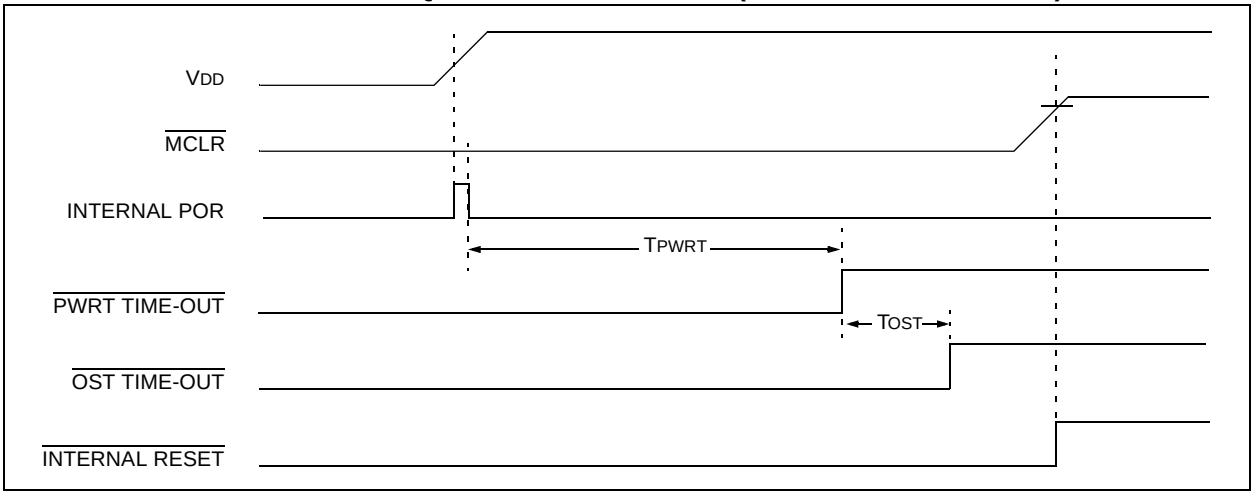

FIGURE 4-6: SLOW RISE TIME ($\overline{MCLR}$ TIED TO V_{DD}, V_{DD} RISE > T_{PWRT})

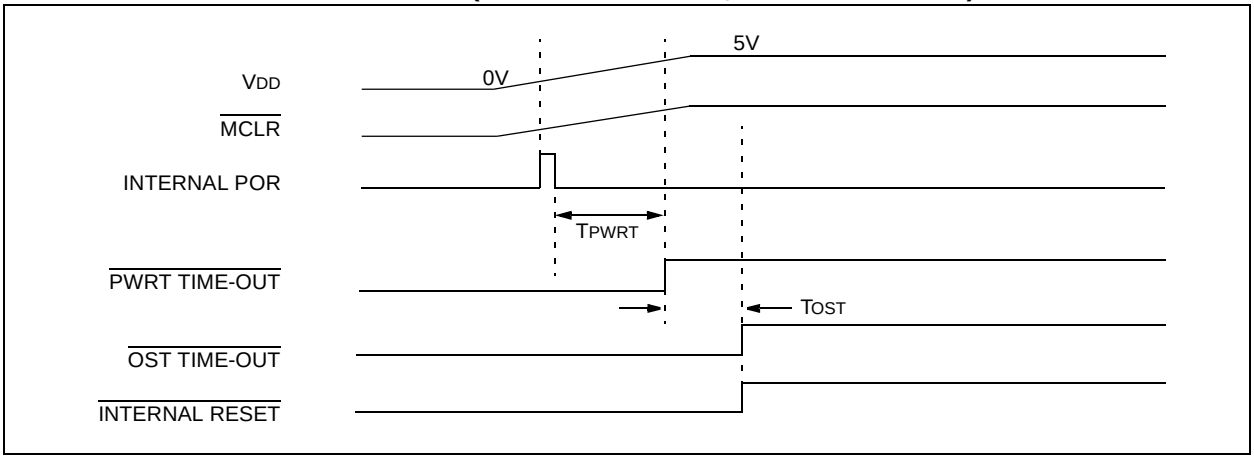

FIGURE 4-7: TIME-OUT SEQUENCE ON POR W/PLL ENABLED ($\overline{MCLR}$ TIED TO V_{DD})

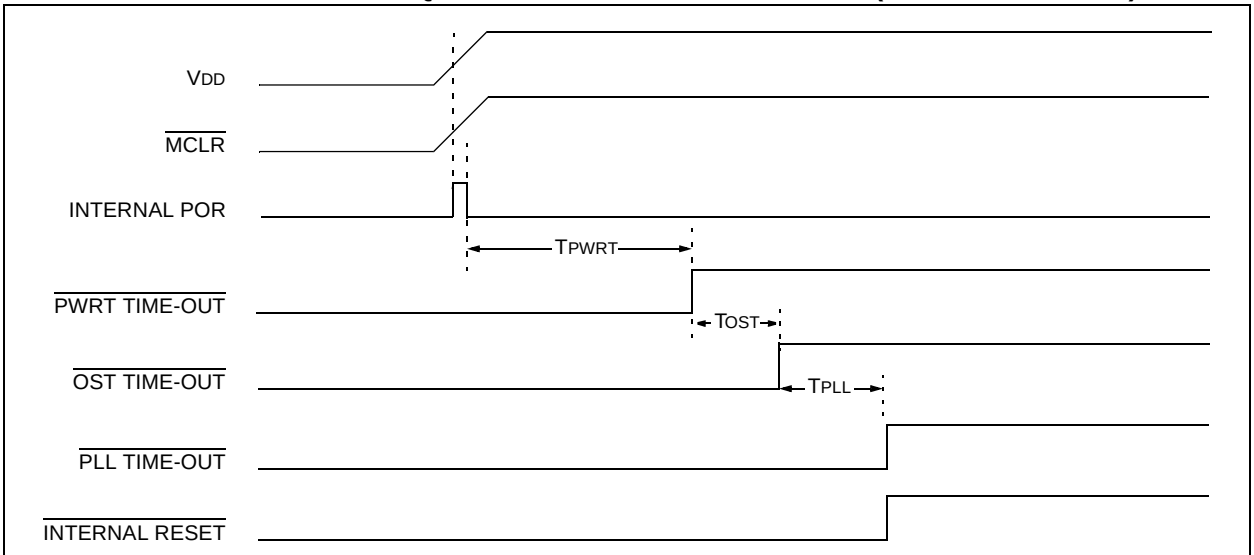

Note: T_{OST} = 1024 clock cycles.
$T_{PLL} \approx$ 2 ms max. First three stages of the PWRT timer.

4.7 Reset State of Registers

Some registers are unaffected by a Reset. Their status is unknown on POR and unchanged by all other Resets. All other registers are forced to a “Reset state” depending on the type of Reset that occurred.

Most registers are not affected by a WDT wake-up, since this is viewed as the resumption of normal operation. Status bits from the RCON register, $\overline{RI}$, $\overline{TO}$, $\overline{PD}$, $\overline{POR}$ and $\overline{BOR}$, are set or cleared differently in different Reset situations, as indicated in Table 4-3. These bits are used by software to determine the nature of the Reset.

Table 5-2 describes the Reset states for all of the Special Function Registers. The table identifies differences between Power-On Reset (POR)/Brown-Out Reset (BOR) and all other Resets, (i.e., Master Clear, WDT Resets, STKFUL, STKUNF, etc.). Additionally, the table identifies register bits that are changed when the device receives a wake-up from WDT or other interrupts.

TABLE 4-3: STATUS BITS, THEIR SIGNIFICANCE AND THE INITIALIZATION CONDITION FOR RCON REGISTER

Condition	Program Counter	RCON Register						STKPTR Register	
		SBOREN	$\overline{RI}$	$\overline{TO}$	$\overline{PD}$	$\overline{POR}$	$\overline{BOR}$	STKFUL	STKUNF
Power-on Reset	0000h	1	1	1	1	0	0	0	0
RESET Instruction	0000h	u(2)	0	u	u	u	u	u	u
Brown-out Reset	0000h	u(2)	1	1	1	u	0	u	u
$\overline{MCLR}$ during Power-Managed Run Modes	0000h	u(2)	u	1	u	u	u	u	u
$\overline{MCLR}$ during Power-Managed Idle Modes and Sleep Mode	0000h	u(2)	u	1	0	u	u	u	u
WDT Time-out during Full Power or Power-Managed Run Mode	0000h	u(2)	u	0	u	u	u	u	u
$\overline{MCLR}$ during Full Power Execution	0000h	u(2)	u	u	u	u	u	u	u
Stack Full Reset (STVREN = 1)	0000h	u(2)	u	u	u	u	u	1	u
Stack Underflow Reset (STVREN = 1)	0000h	u(2)	u	u	u	u	u	u	1
Stack Underflow Error (not an actual Reset, STVREN = 0)	0000h	u(2)	u	u	u	u	u	u	1
WDT Time-out during Power-Managed Idle or Sleep Modes	PC + 2	u(2)	u	0	0	u	u	u	u
Interrupt Exit from Power-Managed Modes	PC + 2(1)	u(2)	u	u	0	u	u	u	u

Legend: u = unchanged

Note 1: When the wake-up is due to an interrupt and the GIEH or GIEL bits are set, the PC is loaded with the interrupt vector (008h or 0018h).

2: Reset state is ‘1’ for SBOREN and unchanged for all other Resets when software BOR is enabled (BOREN<1:0> Configuration bits = 01). Otherwise, the Reset state is ‘0’.

TABLE 4-4: REGISTERS ASSOCIATED WITH RESETS

Name	Bit 7	Bit 6	Bit 5	Bit 4	Bit 3	Bit 2	Bit 1	Bit 0	Register on Page
RCON	IPEN	SBOREN	—	$\overline{RI}$	$\overline{TO}$	$\overline{PD}$	$\overline{POR}$	$\overline{BOR}$	56
STKPTR	STKFUL	STKUNF	—	STKPTR<4:0>					67

Legend: — = unimplemented locations, read as ‘0’. Shaded bits are not used for Resets.

© 2010-2016 Microchip Technology Inc.

TABLE 4-5: CONFIGURATION REGISTERS ASSOCIATED WITH RESETS

Name	Bit 7	Bit 6	Bit 5	Bit 4	Bit 3	Bit 2	Bit 1	Bit 0	Register on Page
CONFIG2L	—	—	—	BORV<1:0>		BOREN<1:0>		$\overline{\text{PWRTEN}}$	346
CONFIG2H	—	—	WDPS<3:0>				WDTEN<1:0>		347
CONFIG3H	MCLRE	—	P2BMX	T3CMX	HFOFST	CCP3MX	PBADEN	CCP2MX	348
CONFIG4L	$\overline{\text{DEBUG}}$	XINST	—	—	—	LVP	—	STRVEN	349

Legend: — = unimplemented locations, read as ‘0’. Shaded bits are not used for Resets.

5.0 MEMORY ORGANIZATION

There are three types of memory in PIC18 Enhanced microcontroller devices:

- Program Memory
- Data RAM
- Data EEPROM

As Harvard architecture devices, the data and program memories use separate buses; this allows for concurrent access of the two memory spaces. The data EEPROM, for practical purposes, can be regarded as a peripheral device, since it is addressed and accessed through a set of control registers.

Additional detailed information on the operation of the Flash program memory is provided in **Section 6.0 "Flash Program Memory"**. Data EEPROM is discussed separately in **Section 7.0 "Data EEPROM Memory"**.

5.1 Program Memory Organization

PIC18 microcontrollers implement a 21-bit program counter, which is capable of addressing a 2-Mbyte program memory space. Accessing a location between the upper boundary of the physically implemented memory and the 2-Mbyte address will return all '`0`'s (a `NOP` instruction).

This family of devices contain the following:

- PIC18(L)F23K22, PIC18(L)F43K22: 8 Kbytes of Flash Memory, up to 4,096 single-word instructions
- PIC18(L)F24K22, PIC18(L)F44K22: 16 Kbytes of Flash Memory, up to 8,192 single-word instructions
- PIC18(L)F25K22, PIC18(L)F45K22: 32 Kbytes of Flash Memory, up to 16,384 single-word instructions
- PIC18(L)F26K22, PIC18(L)F46K22: 64 Kbytes of Flash Memory, up to 37,768 single-word instructions

PIC18 devices have two interrupt vectors. The Reset vector address is at 0000h and the interrupt vector addresses are at 0008h and 0018h.

The program memory map for PIC18(L)F2X/4XK22 devices is shown in Figure 5-1. Memory block details are shown in Figure 20-2.

© 2010-2016 Microchip Technology Inc.

FIGURE 5-1: PROGRAM MEMORY MAP AND STACK FOR PIC18(L)F2X/4XK22 DEVICES

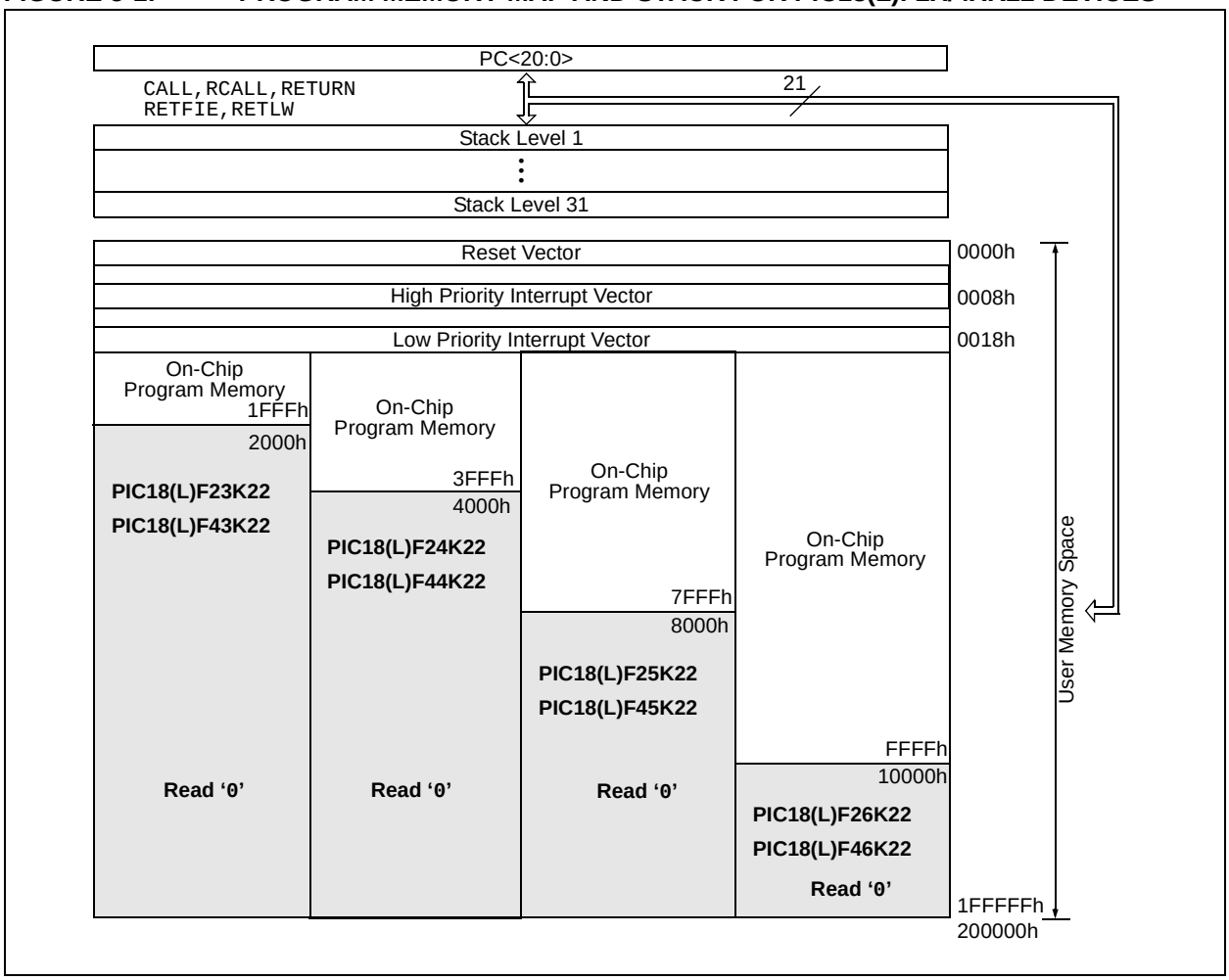

5.1.1 PROGRAM COUNTER

The Program Counter (PC) specifies the address of the instruction to fetch for execution. The PC is 21 bits wide and is contained in three separate 8-bit registers. The low byte, known as the PCL register, is both readable and writable. The high byte, or PCH register, contains the PC<15:8> bits; it is not directly readable or writable. Updates to the PCH register are performed through the PCLATH register. The upper byte is called PCU. This register contains the PC<20:16> bits; it is also not directly readable or writable. Updates to the PCU register are performed through the PCLATU register.

The contents of PCLATH and PCLATU are transferred to the program counter by any operation that writes PCL. Similarly, the upper two bytes of the program counter are transferred to PCLATH and PCLATU by an operation that reads PCL. This is useful for computed offsets to the PC (see **Section 5.2.2.1 "Computed GOTO"**).

The PC addresses bytes in the program memory. To prevent the PC from becoming misaligned with word instructions, the Least Significant bit of PCL is fixed to a value of '0'.

The PC increments by two to address sequential instructions in the program memory.

The CALL, RCALL, GOTO and program branch instructions write to the program counter directly. For these instructions, the contents of PCLATH and PCLATU are not transferred to the program counter.

5.1.2 RETURN ADDRESS STACK

The return address stack allows any combination of up to 31 program calls and interrupts to occur. The PC is pushed onto the stack when a CALL or RCALL instruction is executed or an interrupt is Acknowledged. The PC value is pulled off the stack on a RETURN, RETLW or a RETFIE instruction. PCLATU and PCLATH are not affected by any of the RETURN or CALL instructions.

The stack operates as a 31-word by 21-bit RAM and a 5-bit Stack Pointer, STKPTR. The stack space is not part of either program or data space.

The Stack Pointer is readable and writable and the address on the top of the stack is readable and writable through the Top-of-Stack (TOS) Special File Registers. Data can also be pushed to, or popped from the stack, using these registers.

A CALL type instruction causes a push onto the stack; the Stack Pointer is first incremented and the location pointed to by the Stack Pointer is written with the contents of the PC (already pointing to the instruction following the CALL). A RETURN type instruction causes a pop from the stack; the contents of the location pointed to by the STKPTR are transferred to the PC and then the Stack Pointer is decremented.

The Stack Pointer is initialized to '00000' after all Resets. There is no RAM associated with the location corresponding to a Stack Pointer value of '00000'; this is only a Reset value. Status bits indicate if the stack is full or has overflowed or has underflowed.

5.1.2.1 Top-of-Stack Access

Only the top of the return address stack (TOS) is readable and writable. A set of three registers, TOSU:TOSH:TOSL, hold the contents of the stack location pointed to by the STKPTR register (Figure 5-2). This allows users to implement a software stack if necessary. After a CALL, RCALL or interrupt, the software can read the pushed value by reading the TOSU:TOSH:TOSL registers. These values can be placed on a user defined software stack. At return time, the software can return these values to TOSU:TOSH:TOSL and do a return.

The user must disable the Global Interrupt Enable (GIE) bits while accessing the stack to prevent inadvertent stack corruption.

FIGURE 5-2: RETURN ADDRESS STACK AND ASSOCIATED REGISTERS

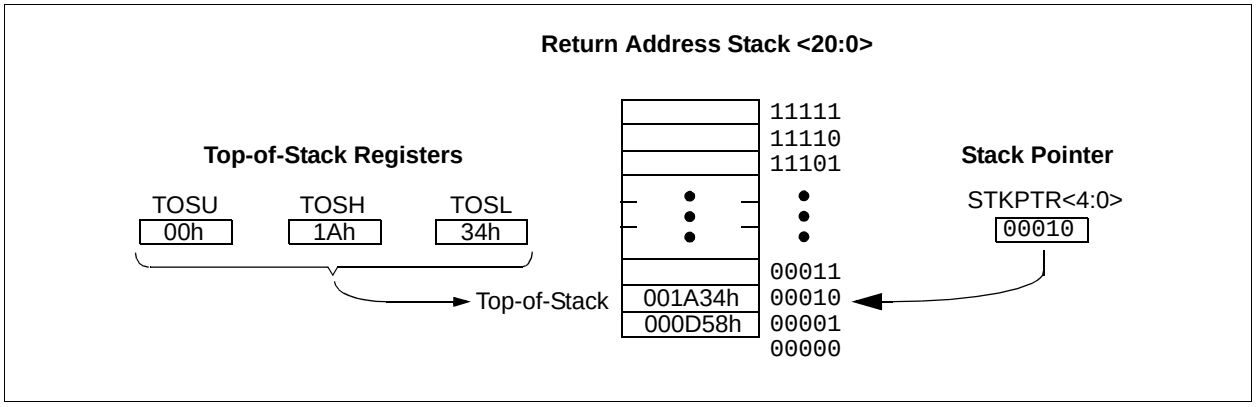

5.1.2.2 Return Stack Pointer (STKPTR)

The STKPTR register (Register 5-1) contains the Stack Pointer value, the STKFUL (stack full) Status bit and the STKUNF (Stack Underflow) Status bits. The value of the Stack Pointer can be 0 through 31. The Stack Pointer increments before values are pushed onto the stack and decrements after values are popped off the stack. On Reset, the Stack Pointer value will be zero. The user may read and write the Stack Pointer value. This feature can be used by a Real-Time Operating System (RTOS) for return stack maintenance.

After the PC is pushed onto the stack 31 times (without popping any values off the stack), the STKFUL bit is set. The STKFUL bit is cleared by software or by a POR.

The action that takes place when the stack becomes full depends on the state of the STVREN (Stack Overflow Reset Enable) Configuration bit. (Refer to **Section 24.1 "Configuration Bits"** for a description of the device Configuration bits.) If STVREN is set (default), the 31st push will push the (PC + 2) value onto the stack, set the STKFUL bit and reset the device. The STKFUL bit will remain set and the Stack Pointer will be set to zero.

If STVREN is cleared, the STKFUL bit will be set on the 31st push and the Stack Pointer will increment to 31. Any additional pushes will not overwrite the 31st push and STKPTR will remain at 31.

When the stack has been popped enough times to unload the stack, the next pop will return a value of zero to the PC and sets the STKUNF bit, while the Stack Pointer remains at zero. The STKUNF bit will remain set until cleared by software or until a POR occurs.

Note:	Returning a value of zero to the PC on an underflow has the effect of vectoring the program to the Reset vector, where the stack conditions can be verified and appropriate actions can be taken. This is not the same as a Reset, as the contents of the SFRs are not affected.

© 2010-2016 Microchip Technology Inc.

5.1.2.3 PUSH and POP Instructions

Since the Top-of-Stack is readable and writable, the ability to push values onto the stack and pull values off the stack without disturbing normal program execution is a desirable feature. The PIC18 instruction set includes two instructions, PUSH and POP, that permit the TOS to be manipulated under software control. TOSU, TOSH and TOSL can be modified to place data or a return address on the stack.

The PUSH instruction places the current PC value onto the stack. This increments the Stack Pointer and loads the current PC value onto the stack.

The POP instruction discards the current TOS by decrementing the Stack Pointer. The previous value pushed onto the stack then becomes the TOS value.

5.2 Register Definitions: Stack Pointer

REGISTER 5-1: STKPTR: STACK POINTER REGISTER

R/C-0	R/C-0	U-0	R/W-0	R/W-0	R/W-0	R/W-0	R/W-0
STKFUL(1)	STKUNF(1)	—	STKPTR<4:0>				
bit 7							bit 0

Legend:			
R = Readable bit	W = Writable bit	U = Unimplemented	C = Clearable only bit
-n = Value at POR	‘1’ = Bit is set	‘0’ = Bit is cleared	x = Bit is unknown

bit 7 **STKFUL:** Stack Full Flag bit(1)
1 = Stack became full or overflowed
0 = Stack has not become full or overflowed

bit 6 **STKUNF:** Stack Underflow Flag bit(1)
1 = Stack Underflow occurred
0 = Stack Underflow did not occur

bit 5 **Unimplemented:** Read as ‘0’

bit 4-0 **STKPTR<4:0>:** Stack Pointer Location bits

Note 1: Bit 7 and bit 6 are cleared by user software or by a POR.

5.2.0.1 Stack Full and Underflow Resets

Device Resets on Stack Overflow and Stack Underflow conditions are enabled by setting the STVREN bit in Configuration Register 4L. When STVREN is set, a full or underflow will set the appropriate STKFUL or STKUNF bit and then cause a device Reset. When STVREN is cleared, a full or underflow condition will set the appropriate STKFUL or STKUNF bit but not cause a device Reset. The STKFUL or STKUNF bits are cleared by the user software or a Power-on Reset.

5.2.1 FAST REGISTER STACK

A fast register stack is provided for the Status, WREG and BSR registers, to provide a “fast return” option for interrupts. The stack for each register is only one level deep and is neither readable nor writable. It is loaded with the current value of the corresponding register when the processor vectors for an interrupt. All interrupt sources will push values into the stack registers. The values in the registers are then loaded back into their associated registers if the RETFIE,FAST instruction is used to return from the interrupt.

If both low and high priority interrupts are enabled, the stack registers cannot be used reliably to return from low priority interrupts. If a high priority interrupt occurs while servicing a low priority interrupt, the stack register values stored by the low priority interrupt will be overwritten. In these cases, users must save the key registers by software during a low priority interrupt.

If interrupt priority is not used, all interrupts may use the fast register stack for returns from interrupt. If no interrupts are used, the fast register stack can be used to restore the Status, WREG and BSR registers at the end of a subroutine call. To use the fast register stack for a subroutine call, a CALL label, FAST instruction must be executed to save the Status, WREG and BSR registers to the fast register stack. A RETURN, FAST instruction is then executed to restore these registers from the fast register stack.

Example 5-1 shows a source code example that uses the fast register stack during a subroutine call and return.

EXAMPLE 5-1: FAST REGISTER STACK CODE EXAMPLE

```
CALL SUB1, FAST     ;STATUS, WREG, BSR
                    ;SAVED IN FAST REGISTER
                    ;STACK
        •
        •

SUB1    •
        •
    RETURN, FAST    ;RESTORE VALUES SAVED
                    ;IN FAST REGISTER STACK
```

5.2.2 LOOK-UP TABLES IN PROGRAM MEMORY

There may be programming situations that require the creation of data structures, or look-up tables, in program memory. For PIC18 devices, look-up tables can be implemented in two ways:

- Computed `GOTO`
- Table Reads

5.2.2.1 Computed `GOTO`

A computed `GOTO` is accomplished by adding an offset to the program counter. An example is shown in Example 5-2.

A look-up table can be formed with an `ADDWF PCL` instruction and a group of `RETLW nn` instructions. The W register is loaded with an offset into the table before executing a call to that table. The first instruction of the called routine is the `ADDWF PCL` instruction. The next instruction executed will be one of the `RETLW nn` instructions that returns the value ‘nn’ to the calling function.

The offset value (in WREG) specifies the number of bytes that the program counter should advance and should be multiples of two (LSb = `0`).

In this method, only one data byte may be stored in each instruction location and room on the return address stack is required.

EXAMPLE 5-2: COMPUTED `GOTO` USING AN OFFSET VALUE

```
        MOVF    OFFSET, W
        CALL    TABLE
ORG     nn00h
TABLE   ADDWF   PCL
        RETLW   nnh
        RETLW   nnh
        RETLW   nnh
        .
        .
        .
```

5.2.2.2 Table Reads and Table Writes

A better method of storing data in program memory allows two bytes of data to be stored in each instruction location.

Look-up table data may be stored two bytes per program word by using table reads and writes. The Table Pointer (TBLPTR) register specifies the byte address and the Table Latch (TABLAT) register contains the data that is read from or written to program memory. Data is transferred to or from program memory one byte at a time.

Table read and table write operations are discussed further in **Section 6.1 “Table Reads and Table Writes”**.

© 2010-2016 Microchip Technology Inc.

5.3 PIC18 Instruction Cycle

5.3.1 CLOCKING SCHEME

The microcontroller clock input, whether from an internal or external source, is internally divided by four to generate four non-overlapping quadrature clocks (Q1, Q2, Q3 and Q4). Internally, the program counter is incremented on every Q1; the instruction is fetched from the program memory and latched into the instruction register during Q4. The instruction is decoded and executed during the following Q1 through Q4. The clocks and instruction execution flow are shown in Figure 5-3.

5.3.2 INSTRUCTION FLOW/PIPELINING

An “Instruction Cycle” consists of four Q cycles: Q1 through Q4. The instruction fetch and execute are pipelined in such a manner that a fetch takes one instruction cycle, while the decode and execute take another instruction cycle. However, due to the pipelining, each instruction effectively executes in one cycle. If an instruction causes the program counter to change (e.g., `GOTO`), then two cycles are required to complete the instruction (Example 5-3).

A fetch cycle begins with the Program Counter (PC) incrementing in Q1.

In the execution cycle, the fetched instruction is latched into the Instruction Register (IR) in cycle Q1. This instruction is then decoded and executed during the Q2, Q3 and Q4 cycles. Data memory is read during Q2 (operand read) and written during Q4 (destination write).

FIGURE 5-3: CLOCK/INSTRUCTION CYCLE

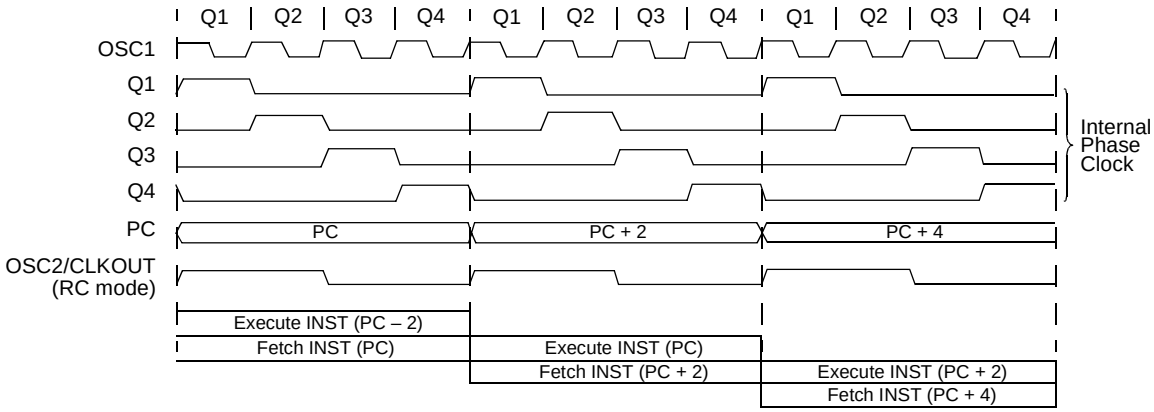

EXAMPLE 5-3: INSTRUCTION PIPELINE FLOW

	TCY0	TCY1	TCY2	TCY3	TCY4	TCY5
1. `MOVLW 55h`	Fetch 1	Execute 1				
2. `MOVWF PORTB`		Fetch 2	Execute 2			
3. `BRA SUB_1`			Fetch 3	Execute 3		
4. `BSF PORTA, BIT3 (Forced NOP)`				Fetch 4	Flush (NOP)	
5. `Instruction @ address SUB_1`					Fetch SUB_1	Execute SUB_1

Note: All instructions are single cycle, except for any program branches. These take two cycles since the fetch instruction is “flushed” from the pipeline while the new instruction is being fetched and then executed.

5.3.3 INSTRUCTIONS IN PROGRAM MEMORY

The program memory is addressed in bytes. Instructions are stored as either two bytes or four bytes in program memory. The Least Significant Byte of an instruction word is always stored in a program memory location with an even address (LSb = 0). To maintain alignment with instruction boundaries, the PC increments in steps of two and the LSb will always read '0' (see **Section 5.1.1 "Program Counter"**).

Figure 5-4 shows an example of how instruction words are stored in the program memory.

The CALL and GOTO instructions have the absolute program memory address embedded into the instruction. Since instructions are always stored on word boundaries, the data contained in the instruction is a word address. The word address is written to PC<20:1>, which accesses the desired byte address in program memory. Instruction #2 in Figure 5-4 shows how the instruction GOTO 0006h is encoded in the program memory. Program branch instructions, which encode a relative address offset, operate in the same manner. The offset value stored in a branch instruction represents the number of single-word instructions that the PC will be offset by. **Section 25.0 "Instruction Set Summary"** provides further details of the instruction set.

FIGURE 5-4: INSTRUCTIONS IN PROGRAM MEMORY

Program Memory Byte Locations →

			LSB = 1	LSB = 0	Word Address ↓
					000000h
					000002h
					000004h
					000006h
Instruction 1:	MOVLW	055h	0Fh	55h	000008h
Instruction 2:	GOTO	0006h	EFh	03h	00000Ah
			F0h	00h	00000Ch
Instruction 3:	MOVFF	123h, 456h	C1h	23h	00000Eh
			F4h	56h	000010h
					000012h
					000014h

5.3.4 TWO-WORD INSTRUCTIONS

The standard PIC18 instruction set has four two-word instructions: CALL, MOVFF, GOTO and LSFR. In all cases, the second word of the instruction always has '1111' as its four Most Significant bits; the other 12 bits are literal data, usually a data memory address.

The use of '1111' in the 4 MSbs of an instruction specifies a special form of NOP. If the instruction is executed in proper sequence – immediately after the first word – the data in the second word is accessed and used by the instruction sequence.

If the first word is skipped for some reason and the second word is executed by itself, a NOP is executed instead. This is necessary for cases when the two-word instruction is preceded by a conditional instruction that changes the PC. Example 5-4 shows how this works.

> **Note:** See **Section 5.8 "PIC18 Instruction Execution and the Extended Instruction Set"** for information on two-word instructions in the extended instruction set.

EXAMPLE 5-4: TWO-WORD INSTRUCTIONS

CASE 1:			
Object Code	**Source Code**		
0110 0110 0000 0000	TSTFSZ	REG1	; is RAM location 0?
1100 0001 0010 0011	MOVFF	REG1, REG2	; No, skip this word
1111 0100 0101 0110			; Execute this word as a NOP
0010 0100 0000 0000	ADDWF	REG3	; continue code
CASE 2:			
Object Code	**Source Code**		
0110 0110 0000 0000	TSTFSZ	REG1	; is RAM location 0?
1100 0001 0010 0011	MOVFF	REG1, REG2	; Yes, execute this word
1111 0100 0101 0110			; 2nd word of instruction
0010 0100 0000 0000	ADDWF	REG3	; continue code

© 2010-2016 Microchip Technology Inc.

5.4 Data Memory Organization

Note: The operation of some aspects of data memory are changed when the PIC18 extended instruction set is enabled. See **Section 5.7 "Data Memory and the Extended Instruction Set"** for more information.

The data memory in PIC18 devices is implemented as static RAM. Each register in the data memory has a 12-bit address, allowing up to 4096 bytes of data memory. The memory space is divided into as many as 16 banks that contain 256 bytes each. Figures 5-5 through 5-7 show the data memory organization for the PIC18(L)F2X/4XK22 devices.

The data memory contains Special Function Registers (SFRs) and General Purpose Registers (GPRs). The SFRs are used for control and status of the controller and peripheral functions, while GPRs are used for data storage and scratchpad operations in the user's application. Any read of an unimplemented location will read as '0's.

The instruction set and architecture allow operations across all banks. The entire data memory may be accessed by Direct, Indirect or Indexed Addressing modes. Addressing modes are discussed later in this subsection.

To ensure that commonly used registers (SFRs and select GPRs) can be accessed in a single cycle, PIC18 devices implement an Access Bank. This is a 256-byte memory space that provides fast access to SFRs and the lower portion of GPR Bank 0 without using the Bank Select Register (BSR). **Section 5.4.2 "Access Bank"** provides a detailed description of the Access RAM.

5.4.1 BANK SELECT REGISTER (BSR)

Large areas of data memory require an efficient addressing scheme to make rapid access to any address possible. Ideally, this means that an entire address does not need to be provided for each read or write operation. For PIC18 devices, this is accomplished with a RAM banking scheme. This divides the memory space into 16 contiguous banks of 256 bytes. Depending on the instruction, each location can be addressed directly by its full 12-bit address, or an 8-bit low-order address and a 4-bit Bank Pointer.

Most instructions in the PIC18 instruction set make use of the Bank Pointer, known as the Bank Select Register (BSR). This SFR holds the 4 Most Significant bits of a location's address; the instruction itself includes the 8 Least Significant bits. Only the four lower bits of the BSR are implemented (BSR<3:0>). The upper four bits are unused; they will always read '0' and cannot be written to. The BSR can be loaded directly by using the `MOVLB` instruction.

The value of the BSR indicates the bank in data memory; the eight bits in the instruction show the location in the bank and can be thought of as an offset from the bank's lower boundary. The relationship between the BSR's value and the bank division in data memory is shown in Figures 5-5 through 5-7.

Since up to 16 registers may share the same low-order address, the user must always be careful to ensure that the proper bank is selected before performing a data read or write. For example, writing what should be program data to an 8-bit address of F9h while the BSR is 0Fh will end up resetting the program counter.

While any bank can be selected, only those banks that are actually implemented can be read or written to. Writes to unimplemented banks are ignored, while reads from unimplemented banks will return '0's. Even so, the STATUS register will still be affected as if the operation was successful. The data memory maps in Figures 5-5 through 5-7 indicate which banks are implemented.

In the core PIC18 instruction set, only the `MOVFF` instruction fully specifies the 12-bit address of the source and target registers. This instruction ignores the BSR completely when it executes. All other instructions include only the low-order address as an operand and must use either the BSR or the Access Bank to locate their target registers.

FIGURE 5-5: DATA MEMORY MAP FOR PIC18(L)F23K22 AND PIC18(L)F43K22 DEVICES

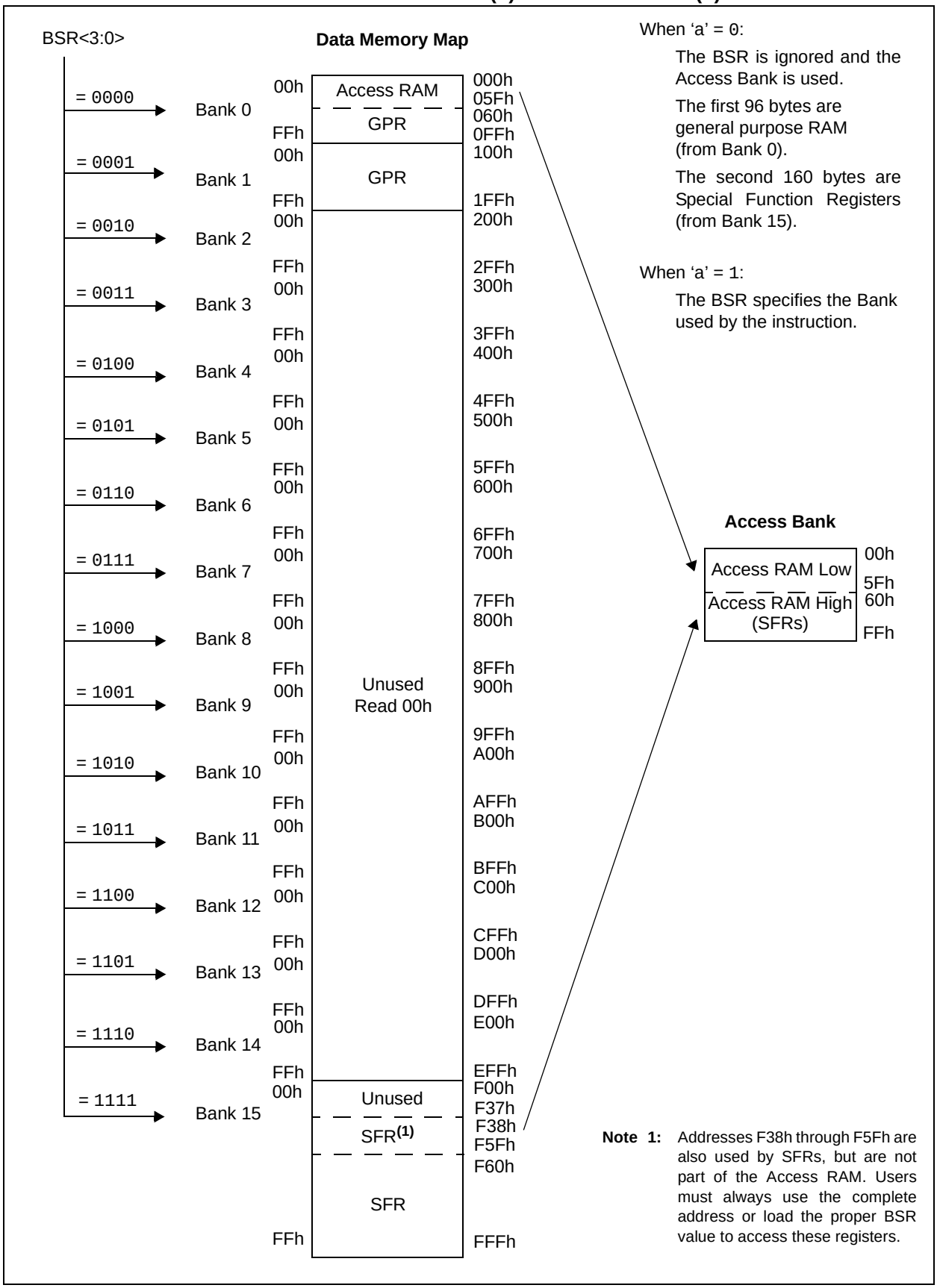

Note 1: Addresses F38h through F5Fh are also used by SFRs, but are not part of the Access RAM. Users must always use the complete address or load the proper BSR value to access these registers.

© 2010-2016 Microchip Technology Inc.

FIGURE 5-6: DATA MEMORY MAP FOR PIC18(L)F24K22 AND PIC18(L)F44K22 DEVICES

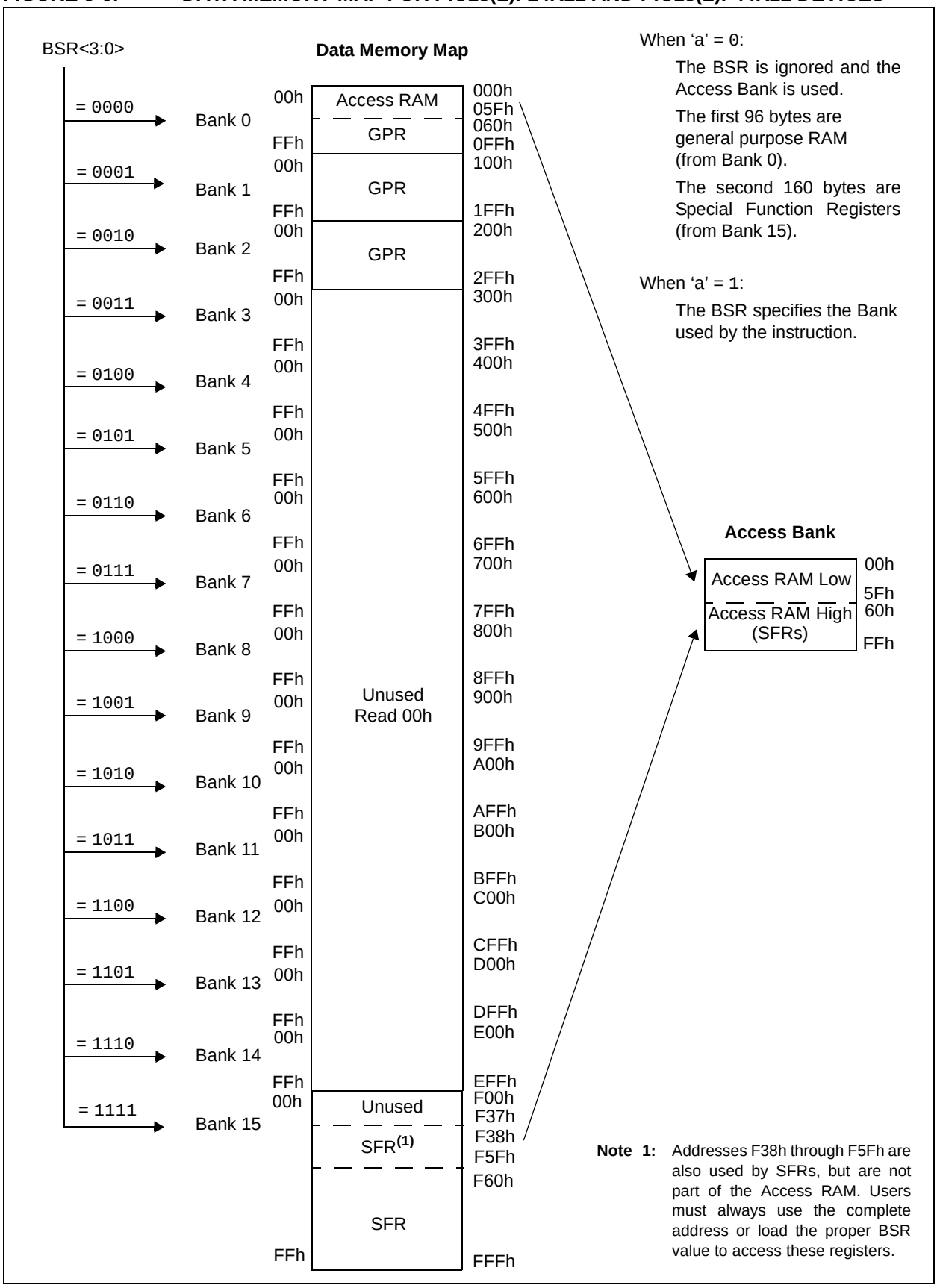

FIGURE 5-7: DATA MEMORY MAP FOR PIC18(L)F25K22 AND PIC18(L)F45K22 DEVICES

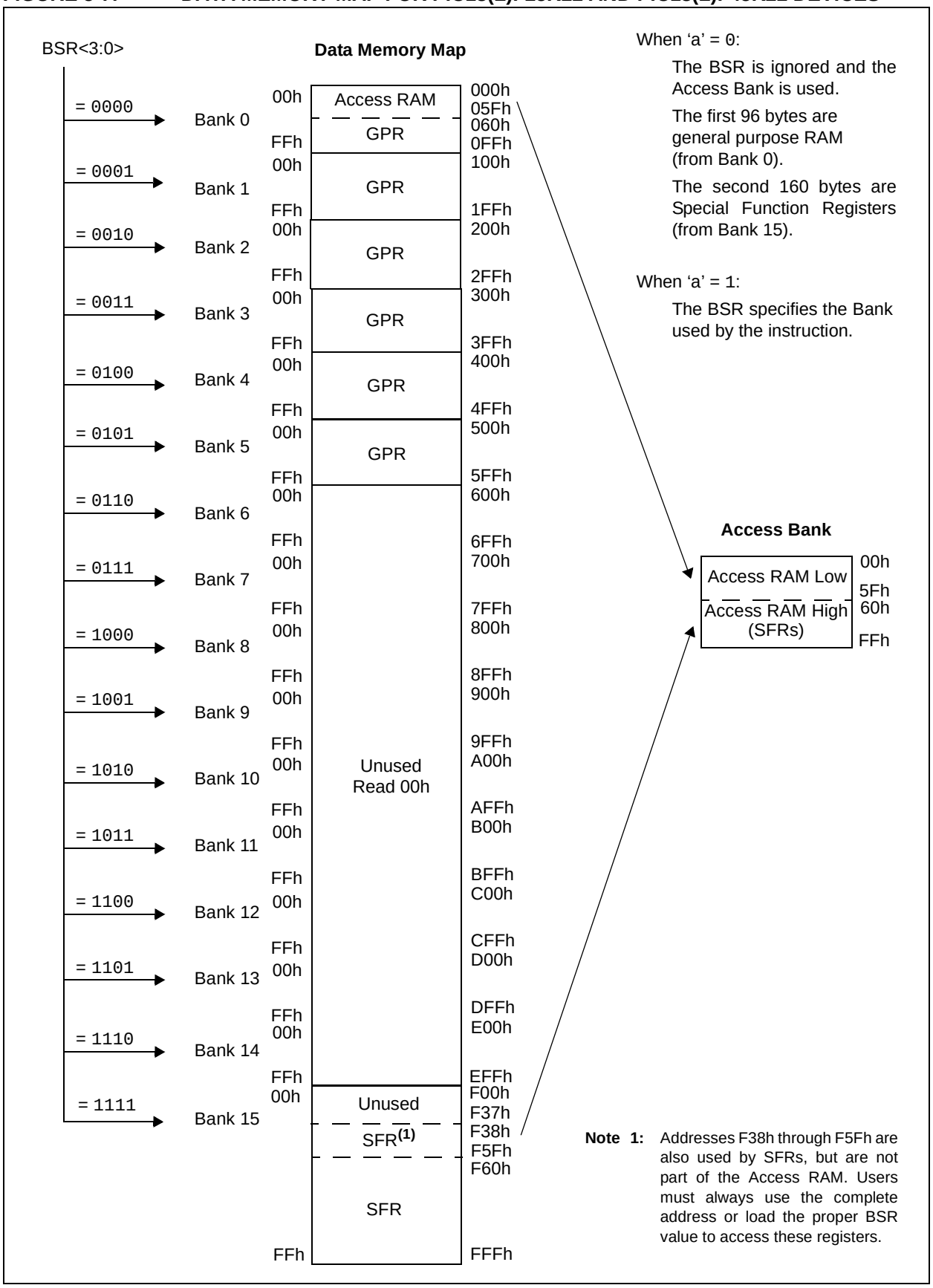

© 2010-2016 Microchip Technology Inc.

FIGURE 5-8: DATA MEMORY MAP FOR PIC18(L)F26K22 AND PIC18(L)F46K22 DEVICES

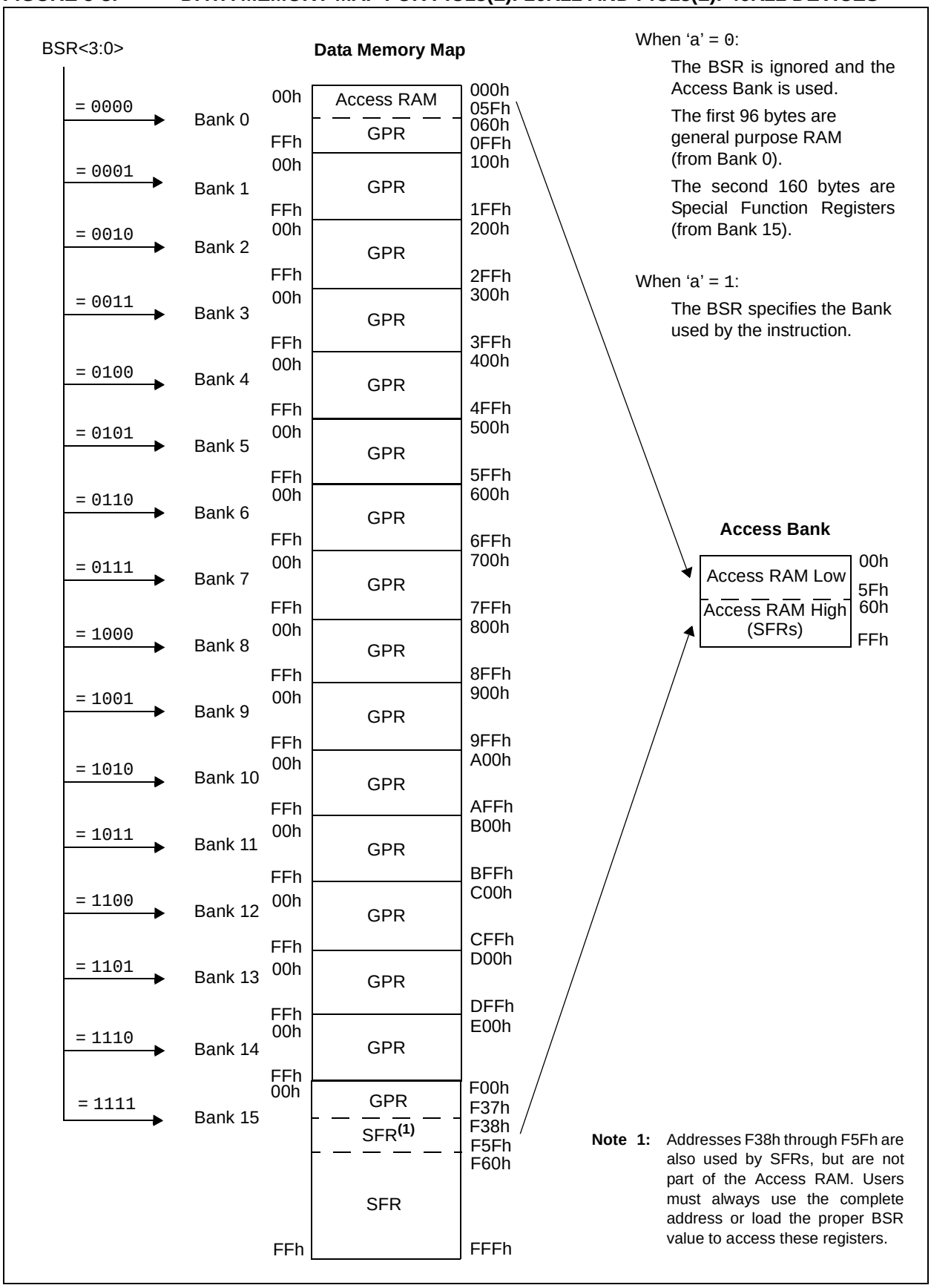

Note 1: Addresses F38h through F5Fh are also used by SFRs, but are not part of the Access RAM. Users must always use the complete address or load the proper BSR value to access these registers.

FIGURE 5-9: USE OF THE BANK SELECT REGISTER (DIRECT ADDRESSING)

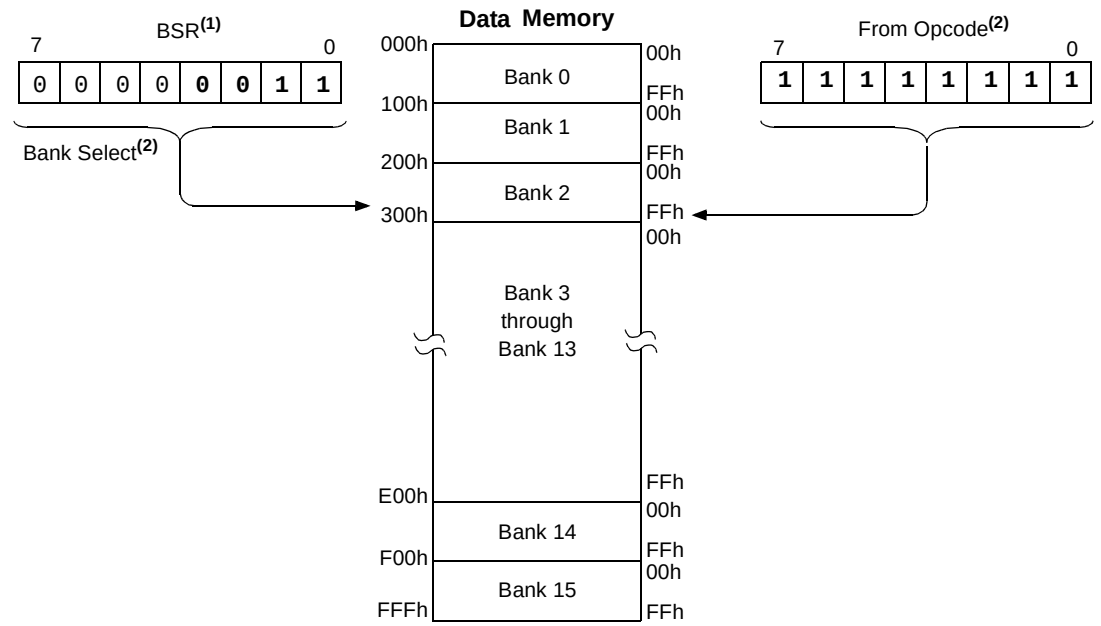

Note 1: The Access RAM bit of the instruction can be used to force an override of the selected bank (BSR<3:0>) to the registers of the Access Bank.

2: The `MOVFF` instruction embeds the entire 12-bit address in the instruction.

© 2010-2016 Microchip Technology Inc.

5.4.2 ACCESS BANK

While the use of the BSR with an embedded 8-bit address allows users to address the entire range of data memory, it also means that the user must always ensure that the correct bank is selected. Otherwise, data may be read from or written to the wrong location. This can be disastrous if a GPR is the intended target of an operation, but an SFR is written to instead. Verifying and/or changing the BSR for each read or write to data memory can become very inefficient.

To streamline access for the most commonly used data memory locations, the data memory is configured with an Access Bank, which allows users to access a mapped block of memory without specifying a BSR. The Access Bank consists of the first 96 bytes of memory (00h-5Fh) in Bank 0 and the last 160 bytes of memory (60h-FFh) in Block 15. The lower half is known as the “Access RAM” and is composed of GPRs. This upper half is also where the device’s SFRs are mapped. These two areas are mapped contiguously in the Access Bank and can be addressed in a linear fashion by an 8-bit address (Figures 5-5 through 5-7).

The Access Bank is used by core PIC18 instructions that include the Access RAM bit (the ‘a’ parameter in the instruction). When ‘a’ is equal to ‘1’, the instruction uses the BSR and the 8-bit address included in the opcode for the data memory address. When ‘a’ is ‘0’, however, the instruction is forced to use the Access Bank address map; the current value of the BSR is ignored entirely.

Using this “forced” addressing allows the instruction to operate on a data address in a single cycle, without updating the BSR first. For 8-bit addresses of 60h and above, this means that users can evaluate and operate on SFRs more efficiently. The Access RAM below 60h is a good place for data values that the user might need to access rapidly, such as immediate computational results or common program variables. Access RAM also allows for faster and more code efficient context saving and switching of variables.

The mapping of the Access Bank is slightly different when the extended instruction set is enabled (XINST Configuration bit = 1). This is discussed in more detail in **Section 5.7.3 “Mapping the Access Bank in Indexed Literal Offset Mode”**.

5.4.3 GENERAL PURPOSE REGISTER FILE

PIC18 devices may have banked memory in the GPR area. This is data RAM, which is available for use by all instructions. GPRs start at the bottom of Bank 0 (address 000h) and grow upwards towards the bottom of the SFR area. GPRs are not initialized by a Power-on Reset and are unchanged on all other Resets.

5.4.4 SPECIAL FUNCTION REGISTERS

The Special Function Registers (SFRs) are registers used by the CPU and peripheral modules for controlling the desired operation of the device. These registers are implemented as static RAM. SFRs start at the top of data memory (FFFh) and extend downward to occupy the top portion of Bank 15 (F38h to FFFh). A list of these registers is given in Table 5-1 and Table 5-2.

The SFRs can be classified into two sets: those associated with the “core” device functionality (ALU, Resets and interrupts) and those related to the peripheral functions. The Reset and interrupt registers are described in their respective chapters, while the ALU’s STATUS register is described later in this section. Registers related to the operation of a peripheral feature are described in the chapter for that peripheral.

The SFRs are typically distributed among the peripherals whose functions they control. Unused SFR locations are unimplemented and read as ‘0’s.

TABLE 5-1: SPECIAL FUNCTION REGISTER MAP FOR PIC18(L)F2X/4XK22 DEVICES

Address	Name	Address	Name	Address	Name	Address	Name	Address	Name
FFFh	TOSU	FD7h	TMR0H	FAFh	SPBRG1	F87h	—(2)	F5Fh	CCPR3H
FFEh	TOSH	FD6h	TMR0L	FAEh	RCREG1	F86h	—(2)	F5Eh	CCPR3L
FFDh	TOSL	FD5h	T0CON	FADh	TXREG1	F85h	—(2)	F5Dh	CCP3CON
FFCh	STKPTR	FD4h	—(2)	FACh	TXSTA1	F84h	PORTE	F5Ch	PWM3CON
FFBh	PCLATU	FD3h	OSCCON	FABh	RCSTA1	F83h	PORTD(3)	F5Bh	ECCP3AS
FFAh	PCLATH	FD2h	OSCCON2	FAAh	EEADRH(4)	F82h	PORTC	F5Ah	PSTR3CON
FF9h	PCL	FD1h	WDTCON	FA9h	EEADR	F81h	PORTB	F59h	CCPR4H
FF8h	TBLPTRU	FD0h	RCON	FA8h	EEDATA	F80h	PORTA	F58h	CCPR4L
FF7h	TBLPTRH	FCFh	TMR1H	FA7h	EECON2(1)	F7Fh	IPR5	F57h	CCP4CON
FF6h	TBLPTRL	FCEh	TMR1L	FA6h	EECON1	F7Eh	PIR5	F56h	CCPR5H
FF5h	TABLAT	FCDh	T1CON	FA5h	IPR3	F7Dh	PIE5	F55h	CCPR5L
FF4h	PRODH	FCCh	T1GCON	FA4h	PIR3	F7Ch	IPR4	F54h	CCP5CON
FF3h	PRODL	FCBh	SSP1CON3	FA3h	PIE3	F7Bh	PIR4	F53h	TMR4
FF2h	INTCON	FCAh	SSP1MSK	FA2h	IPR2	F7Ah	PIE4	F52h	PR4
FF1h	INTCON2	FC9h	SSP1BUF	FA1h	PIR2	F79h	CM1CON0	F51h	T4CON
FF0h	INTCON3	FC8h	SSP1ADD	FA0h	PIE2	F78h	CM2CON0	F50h	TMR5H
FEFh	INDF0(1)	FC7h	SSP1STAT	F9Fh	IPR1	F77h	CM2CON1	F4Fh	TMR5L
FEEh	POSTINC0(1)	FC6h	SSP1CON1	F9Eh	PIR1	F76h	SPBRGH2	F4Eh	T5CON
FEDh	POSTDEC0(1)	FC5h	SSP1CON2	F9Dh	PIE1	F75h	SPBRG2	F4Dh	T5GCON
FECh	PREINC0(1)	FC4h	ADRESH	F9Ch	HLVDCON	F74h	RCREG2	F4Ch	TMR6
FEBh	PLUSW0(1)	FC3h	ADRESL	F9Bh	OSCTUNE	F73h	TXREG2	F4Bh	PR6
FEAh	FSR0H	FC2h	ADCON0	F9Ah	—(2)	F72h	TXSTA2	F4Ah	T6CON
FE9h	FSR0L	FC1h	ADCON1	F99h	—(2)	F71h	RCSTA2	F49h	CCPTMRS0
FE8h	WREG	FC0h	ADCON2	F98h	—(2)	F70h	BAUDCON2	F48h	CCPTMRS1
FE7h	INDF1(1)	FBFh	CCPR1H	F97h	—(2)	F6Fh	SSP2BUF	F47h	SRCON0
FE6h	POSTINC1(1)	FBEh	CCPR1L	F96h	TRISE	F6Eh	SSP2ADD	F46h	SRCON1
FE5h	POSTDEC1(1)	FBDh	CCP1CON	F95h	TRISD(3)	F6Dh	SSP2STAT	F45h	CTMUCONH
FE4h	PREINC1(1)	FBCh	TMR2	F94h	TRISC	F6Ch	SSP2CON1	F44h	CTMUCONL
FE3h	PLUSW1(1)	FBBh	PR2	F93h	TRISB	F6Bh	SSP2CON2	F43h	CTMUICON
FE2h	FSR1H	FBAh	T2CON	F92h	TRISA	F6Ah	SSP2MSK	F42h	VREFCON0
FE1h	FSR1L	FB9h	PSTR1CON	F91h	—(2)	F69h	SSP2CON3	F41h	VREFCON1
FE0h	BSR	FB8h	BAUDCON1	F90h	—(2)	F68h	CCPR2H	F40h	VREFCON2
FDFh	INDF2(1)	FB7h	PWM1CON	F8Fh	—(2)	F67h	CCPR2L	F3Fh	PMD0
FDEh	POSTINC2(1)	FB6h	ECCP1AS	F8Eh	—(2)	F66h	CCP2CON	F3Eh	PMD1
FDDh	POSTDEC2(1)	FB5h	—(2)	F8Dh	LATE(3)	F65h	PWM2CON	F3Dh	PMD2
FDCh	PREINC2(1)	FB4h	T3GCON	F8Ch	LATD(3)	F64h	ECCP2AS	F3Ch	ANSELE
FDBh	PLUSW2(1)	FB3h	TMR3H	F8Bh	LATC	F63h	PSTR2CON	F3Bh	ANSELD
FDAh	FSR2H	FB2h	TMR3L	F8Ah	LATB	F62h	IOCB	F3Ah	ANSELC
FD9h	FSR2L	FB1h	T3CON	F89h	LATA	F61h	WPUB	F39h	ANSELB
FD8h	STATUS	FB0h	SPBRGH1	F88h	—(2)	F60h	SLRCON	F38h	ANSELA

Note 1: This is not a physical register.
2: Unimplemented registers are read as ‘0’.
3: PIC18(L)F4XK22 devices only.
4: PIC18(L)F26K22 and PIC18(L)F46K22 devices only.

© 2010-2016 Microchip Technology Inc.

TABLE 5-2: REGISTER FILE SUMMARY FOR PIC18(L)F2X/4XK22 DEVICES

Address	Name	Bit 7	Bit 6	Bit 5	Bit 4	Bit 3	Bit 2	Bit 1	Bit 0	Value on POR, BOR
FFFh	TOSU	—	—	—	Top-of-Stack, Upper Byte (TOS<20:16>)					---0 0000
FFEh	TOSH	Top-of-Stack, High Byte (TOS<15:8>)								0000 0000
FFDh	TOSL	Top-of-Stack, Low Byte (TOS<7:0>)								0000 0000
FFCh	STKPTR	STKFUL	STKUNF	—	STKPTR<4:0>					00-0 0000
FFBh	PCLATU	—	—	—	Holding Register for PC<20:16>					---0 0000
FFAh	PCLATH	Holding Register for PC<15:8>								0000 0000
FF9h	PCL	Holding Register for PC<7:0>								0000 0000
FF8h	TBLPTRU	—	—	Program Memory Table Pointer Upper Byte(TBLPTR<21:16>)						--00 0000
FF7h	TBLPTRH	Program Memory Table Pointer High Byte(TBLPTR<15:8>)								0000 0000
FF6h	TBLPTRL	Program Memory Table Pointer Low Byte(TBLPTR<7:0>)								0000 0000
FF5h	TABLAT	Program Memory Table Latch								0000 0000
FF4h	PRODH	Product Register, High Byte								xxxx xxxx
FF3h	PRODL	Product Register, Low Byte								xxxx xxxx
FF2h	INTCON	GIE/GIEH	PEIE/GIEL	TMR0IE	INT0IE	RBIE	TMR0IF	INT0IF	RBIF	0000 000x
FF1h	INTCON2	$\overline{\text{RBPU}}$	INTEDG0	INTEDG1	INTEDG2	—	TMR0IP	—	RBIP	1111 -1-1
FF0h	INTCON3	INT2IP	INT1IP	—	INT2IE	INT1IE	—	INT2IF	INT1IF	11-0 0-00
FEFh	INDF0	Uses contents of FSR0 to address data memory – value of FSR0 not changed (not a physical register)								---- ----
FEEh	POSTINC0	Uses contents of FSR0 to address data memory – value of FSR0 post-incremented (not a physical register)								---- ----
FEDh	POSTDEC0	Uses contents of FSR0 to address data memory – value of FSR0 post-decremented (not a physical register)								---- ----
FECh	PREINC0	Uses contents of FSR0 to address data memory – value of FSR0 pre-incremented (not a physical register)								---- ----
FEBh	PLUSW0	Uses contents of FSR0 to address data memory – value of FSR0 pre-incremented (not a physical register) – value of FSR0 offset by W								---- ----
FEAh	FSR0H	—	—	—	—	Indirect Data Memory Address Pointer 0, High Byte				---- 0000
FE9h	FSR0L	Indirect Data Memory Address Pointer 0, Low Byte								xxxx xxxx
FE8h	WREG	Working Register								xxxx xxxx
FE7h	INDF1	Uses contents of FSR1 to address data memory – value of FSR1 not changed (not a physical register)								---- ----
FE6h	POSTINC1	Uses contents of FSR1 to address data memory – value of FSR1 post-incremented (not a physical register)								---- ----
FE5h	POSTDEC1	Uses contents of FSR1 to address data memory – value of FSR1 post-decremented (not a physical register)								---- ----
FE4h	PREINC1	Uses contents of FSR1 to address data memory – value of FSR1 pre-incremented (not a physical register)								---- ----
FE3h	PLUSW1	Uses contents of FSR1 to address data memory – value of FSR1 pre-incremented (not a physical register) – value of FSR1 offset by W								---- ----
FE2h	FSR1H	—	—	—	—	Indirect Data Memory Address Pointer 1, High Byte				---- 0000
FE1h	FSR1L	Indirect Data Memory Address Pointer 1, Low Byte								xxxx xxxx
FE0h	BSR	—	—	—	—	Bank Select Register				---- 0000
FDFh	INDF2	Uses contents of FSR2 to address data memory – value of FSR2 not changed (not a physical register)								---- ----
FDEh	POSTINC2	Uses contents of FSR2 to address data memory – value of FSR2 post-incremented (not a physical register)								---- ----
FDDh	POSTDEC2	Uses contents of FSR2 to address data memory – value of FSR2 post-decremented (not a physical register)								---- ----
FDCh	PREINC2	Uses contents of FSR2 to address data memory – value of FSR2 pre-incremented (not a physical register)								---- ----
FDBh	PLUSW2	Uses contents of FSR2 to address data memory – value of FSR2 pre-incremented (not a physical register) – value of FSR2 offset by W								---- ----
FDAh	FSR2H	—	—	—	—	Indirect Data Memory Address Pointer 2, High Byte				---- 0000
FD9h	FSR2L	Indirect Data Memory Address Pointer 2, Low Byte								xxxx xxxx
FD8h	STATUS	—	—	—	N	OV	Z	DC	C	---x xxxx
FD7h	TMR0H	Timer0 Register, High Byte								0000 0000
FD6h	TMR0L	Timer0 Register, Low Byte								xxxx xxxx
FD5h	T0CON	TMR0ON	T08BIT	T0CS	T0SE	PSA	T0PS<2:0>			1111 1111
FD3h	OSCCON	IDLEN	IRCF<2:0>			OSTS	HFIOFS	SCS<1:0>		0011 q000
FD2h	OSCCON2	PLLRDY	SOSCRUN	—	MFIOSEL	SOSCGO	PRISD	MFIOFS	LFIOFS	00-0 01x0

Legend: x = unknown, u = unchanged, — = unimplemented, q = value depends on condition

Note 1: PIC18(L)F4XK22 devices only.

2: PIC18(L)F2XK22 devices only.

3: PIC18(L)F23/24K22 and PIC18(L)F43/44K22 devices only.

4: PIC18(L)F26K22 and PIC18(L)F46K22 devices only.

TABLE 5-2: REGISTER FILE SUMMARY FOR PIC18(L)F2X/4XK22 DEVICES (CONTINUED)

Address	Name	Bit 7	Bit 6	Bit 5	Bit 4	Bit 3	Bit 2	Bit 1	Bit 0	Value on POR, BOR
FD1h	WDTCON	—	—	—	—	—	—	—	SWDTEN	---- ---0
FD0h	RCON	IPEN	SBOREN	—	$\overline{RI}$	$\overline{TO}$	$\overline{PD}$	$\overline{POR}$	$\overline{BOR}$	01-1 1100
FCFh	TMR1H	Holding Register for the Most Significant Byte of the 16-bit TMR1 Register								xxxx xxxx
FCEh	TMR1L	Least Significant Byte of the 16-bit TMR1 Register								xxxx xxxx
FCDh	T1CON	TMR1CS<1:0>		T1CKPS<1:0>		T1SOSCEN	$\overline{T1SYNC}$	T1RD16	TMR1ON	0000 0000
FCCh	T1GCON	TMR1GE	T1GPOL	T1GTM	T1GSPM	T1GGO/$\overline{DONE}$	T1GVAL	T1GSS<1:0>		0000 xx00
FCBh	SSP1CON3	ACKTIM	PCIE	SCIE	BOEN	SDAHT	SBCDE	AHEN	DHEN	0000 0000
FCAh	SSP1MSK	SSP1 MASK Register bits								1111 1111
FC9h	SSP1BUF	SSP1 Receive Buffer/Transmit Register								xxxx xxxx
FC8h	SSP1ADD	SSP1 Address Register in I^2C Slave Mode. SSP1 Baud Rate Reload Register in I^2C Master Mode								0000 0000
FC7h	SSP1STAT	SMP	CKE	D/$\overline{A}$	P	S	R/$\overline{W}$	UA	BF	0000 0000
FC6h	SSP1CON1	WCOL	SSPOV	SSPEN	CKP	SSPM<3:0>				0000 0000
FC5h	SSP1CON2	GCEN	ACKSTAT	ACKDT	ACKEN	RCEN	PEN	RSEN	SEN	0000 0000
FC4h	ADRESH	A/D Result, High Byte								xxxx xxxx
FC3h	ADRESL	A/D Result, Low Byte								xxxx xxxx
FC2h	ADCON0	—	CHS<4:0>					GO/$\overline{DONE}$	ADON	--00 0000
FC1h	ADCON1	TRIGSEL	—	—	—	PVCFG<1:0>		NVCFG<1:0>		0--- 0000
FC0h	ADCON2	ADFM	—	ACQT<2:0>			ADCS<2:0>			0-00 0000
FBFh	CCPR1H	Capture/Compare/PWM Register 1, High Byte								xxxx xxxx
FBEh	CCPR1L	Capture/Compare/PWM Register 1, Low Byte								xxxx xxxx
FBDh	CCP1CON	P1M<1:0>		DC1B<1:0>		CCP1M<3:0>				0000 0000
FBCh	TMR2	Timer2 Register								0000 0000
FBBh	PR2	Timer2 Period Register								1111 1111
FBAh	T2CON	—	T2OUTPS<3:0>				TMR2ON	T2CKPS<1:0>		-000 0000
FB9h	PSTR1CON	—	—	—	STR1SYNC	STR1D	STR1C	STR1B	STR1A	---0 0001
FB8h	BAUDCON1	ABDOVF	RCIDL	DTRXP	CKTXP	BRG16	—	WUE	ABDEN	0100 0-00
FB7h	PWM1CON	P1RSEN	P1DC<6:0>							0000 0000
FB6h	ECCP1AS	CCP1ASE	CCP1AS<2:0>			PSS1AC<1:0>		PSS1BD<1:0>		0000 0000
FB4h	T3GCON	TMR3GE	T3GPOL	T3GTM	T3GSPM	T3GGO/$\overline{DONE}$	T3GVAL	T3GSS<1:0>		0000 0x00
FB3h	TMR3H	Holding Register for the Most Significant Byte of the 16-bit TMR3 Register								xxxx xxxx
FB2h	TMR3L	Least Significant Byte of the 16-bit TMR3 Register								xxxx xxxx
FB1h	T3CON	TMR3CS<1:0>		T3CKPS<1:0>		T3SOSCEN	$\overline{T3SYNC}$	T3RD16	TMR3ON	0000 0000
FB0h	SPBRGH1	EUSART1 Baud Rate Generator, High Byte								0000 0000
FAFh	SPBRG1	EUSART1 Baud Rate Generator, Low Byte								0000 0000
FAEh	RCREG1	EUSART1 Receive Register								0000 0000
FADh	TXREG1	EUSART1 Transmit Register								0000 0000
FACh	TXSTA1	CSRC	TX9	TXEN	SYNC	SENDB	BRGH	TRMT	TX9D	0000 0010
FABh	RCSTA1	SPEN	RX9	SREN	CREN	ADDEN	FERR	OERR	RX9D	0000 000x
FAAh	EEADRH(5)	—	—	—	—	—	—	EEADR<9:8>		---- --00
FA9h	EEADR	EEADR<7:0>								0000 0000
FA8h	EEDATA	EEPROM Data Register								0000 0000
FA7h	EECON2	EEPROM Control Register 2 (not a physical register)								---- --00
FA6h	EECON1	EEPGD	CFGS	—	FREE	WRERR	WREN	WR	RD	xx-0 x000
FA5h	IPR3	SSP2IP	BCL2IP	RC2IP	TX2IP	CTMUIP	TMR5GIP	TMR3GIP	TMR1GIP	0000 0000
FA4h	PIR3	SSP2IF	BCL2IF	RC2IF	TX2IF	CTMUIF	TMR5GIF	TMR3GIF	TMR1GIF	0000 0000
FA3h	PIE3	SSP2IE	BCL2IE	RC2IE	TX2IE	CTMUIE	TMR5GIE	TMR3GIE	TMR1GIE	0000 0000

Legend: x = unknown, u = unchanged, — = unimplemented, q = value depends on condition

Note 1: PIC18(L)F4XK22 devices only.
2: PIC18(L)F2XK22 devices only.
3: PIC18(L)F23/24K22 and PIC18(L)F43/44K22 devices only.
4: PIC18(L)F26K22 and PIC18(L)F46K22 devices only.

© 2010-2016 Microchip Technology Inc.

TABLE 5-2: REGISTER FILE SUMMARY FOR PIC18(L)F2X/4XK22 DEVICES (CONTINUED)

Address	Name	Bit 7	Bit 6	Bit 5	Bit 4	Bit 3	Bit 2	Bit 1	Bit 0	Value on POR, BOR
FA2h	IPR2	OSCFIP	C1IP	C2IP	EEIP	BCL1IP	HLVDIP	TMR3IP	CCP2IP	1111 1111
FA1h	PIR2	OSCFIF	C1IF	C2IF	EEIF	BCL1IF	HLVDIF	TMR3IF	CCP2IF	0000 0000
FA0h	PIE2	OSCFIE	C1IE	C2IE	EEIE	BCL1IE	HLVDIE	TMR3IE	CCP2IE	0000 0000
F9Fh	IPR1	—	ADIP	RC1IP	TX1IP	SSP1IP	CCP1IP	TMR2IP	TMR1IP	-111 1111
F9Eh	PIR1	—	ADIF	RC1IF	TX1IF	SSP1IF	CCP1IF	TMR2IF	TMR1IF	-000 0000
F9Dh	PIE1	—	ADIE	RC1IE	TX1IE	SSP1IE	CCP1IE	TMR2IE	TMR1IE	-000 0000
F9Ch	HLVDCON	VDIRMAG	BGVST	IRVST	HLVDEN	HLVDL<3:0>				0000 0000
F9Bh	OSCTUNE	INTSRC	PLLEN	TUN<5:0>						00xx xxxx
F96h	TRISE	WPUE3	—	—	—	—	TRISE2(1)	TRISE1(1)	TRISE0(1)	1--- -111
F95h	TRISD(1)	TRISD7	TRISD6	TRISD5	TRISD4	TRISD3	TRISD2	TRISD1	TRISD0	1111 1111
F94h	TRISC	TRISC7	TRISC6	TRISC5	TRISC4	TRISC3	TRISC2	TRISC1	TRISC0	1111 1111
F93h	TRISB	TRISB7	TRISB6	TRISB5	TRISB4	TRISB3	TRISB2	TRISB1	TRISB0	1111 1111
F92h	TRISA	TRISA7	TRISA6	TRISA5	TRISA4	TRISA3	TRISA2	TRISA1	TRISA0	1111 1111
F8Dh	LATE(1)	—	—	—	—	—	LATE2	LATE1	LATE0	---- -xxx
F8Ch	LATD(1)	LATD7	LATD6	LATD5	LATD4	LATD3	LATD2	LATD1	LATD0	xxxx xxxx
F8Bh	LATC	LATC7	LATC6	LATC5	LATC4	LATC3	LATC2	LATC1	LATC0	xxxx xxxx
F8Ah	LATB	LATB7	LATB6	LATB5	LATB4	LATB3	LATB2	LATB1	LATB0	xxxx xxxx
F89h	LATA	LATA7	LATA6	LATA5	LATA4	LATA3	LATA2	LATA1	LATA0	xxxx xxxx
F84h	PORTE(2)	—	—	—	—	RE3	—	—	—	---- x---
	PORTE(1)	—	—	—	—	RE3	RE2	RE1	RE0	---- x000
F83h	PORTD(1)	RD7	RD6	RD5	RD4	RD3	RD2	RD1	RD0	0000 0000
F82h	PORTC	RC7	RC6	RC5	RC4	RC3	RC2	RC1	RC0	0000 00xx
F81h	PORTB	RB7	RB6	RB5	RB4	RB3	RB2	RB1	RB0	xxx0 0000
F80h	PORTA	RA7	RA6	RA5	RA4	RA3	RA2	RA1	RA0	xx0x 0000
F7Fh	IPR5	—	—	—	—	—	TMR6IP	TMR5IP	TMR4IP	---- -111
F7Eh	PIR5	—	—	—	—	—	TMR6IF	TMR5IF	TMR4IF	---- -111
F7Dh	PIE5	—	—	—	—	—	TMR6IE	TMR5IE	TMR4IE	---- -000
F7Ch	IPR4	—	—	—	—	—	CCP5IP	CCP4IP	CCP3IP	---- -000
F7Bh	PIR4	—	—	—	—	—	CCP5IF	CCP4IF	CCP3IF	---- -000
F7Ah	PIE4	—	—	—	—	—	CCP5IE	CCP4IE	CCP3IE	---- -000
F79h	CM1CON0	C1ON	C1OUT	C1OE	C1POL	C1SP	C1R	C1CH<1:0>		0000 1000
F78h	CM2CON0	C2ON	C2OUT	C2OE	C2POL	C2SP	C2R	C2CH<1:0>		0000 1000
F77h	CM2CON1	MC1OUT	MC2OUT	C1RSEL	C2RSEL	C1HYS	C2HYS	C1SYNC	C2SYNC	0000 0000
F76h	SPBRGH2	EUSART2 Baud Rate Generator, High Byte								0000 0000
F75h	SPBRG2	EUSART2 Baud Rate Generator, Low Byte								0000 0000
F74h	RCREG2	EUSART2 Receive Register								0000 0000
F73h	TXREG2	EUSART2 Transmit Register								0000 0000
F72h	TXSTA2	CSRC	TX9	TXEN	SYNC	SENDB	BRGH	TRMT	TX9D	0000 0010
F71h	RCSTA2	SPEN	RX9	SREN	CREN	ADDEN	FERR	OERR	RX9D	0000 000x
F70h	BAUDCON2	ABDOVF	RCIDL	DTRXP	CKTXP	BRG16	—	WUE	ABDEN	01x0 0-00
F6Fh	SSP2BUF	SSP2 Receive Buffer/Transmit Register								xxxx xxxx
F6Eh	SSP2ADD	SSP2 Address Register in I^{2}C Slave Mode. SSP2 Baud Rate Reload Register in I^{2}C Master Mode								0000 0000
F6Dh	SSP2STAT	SMP	CKE	D/$\overline{A}$	P	S	R/$\overline{W}$	UA	BF	0000 0000
F6Ch	SSP2CON1	WCOL	SSPOV	SSPEN	CKP	SSPM<3:0>				0000 0000
F6Bh	SSP2CON2	GCEN	ACKSTAT	ACKDT	ACKEN	RCEN	PEN	RSEN	SEN	0000 0000
F6Ah	SSP2MSK	SSP1 MASK Register bits								1111 1111
F69h	SSP2CON3	ACKTIM	PCIE	SCIE	BOEN	SDAHT	SBCDE	AHEN	DHEN	0000 0000

Legend: x = unknown, u = unchanged, — = unimplemented, q = value depends on condition

Note 1: PIC18(L)F4XK22 devices only.

2: PIC18(L)F2XK22 devices only.

3: PIC18(L)F23/24K22 and PIC18(L)F43/44K22 devices only.

4: PIC18(L)F26K22 and PIC18(L)F46K22 devices only.

TABLE 5-2: REGISTER FILE SUMMARY FOR PIC18(L)F2X/4XK22 DEVICES (CONTINUED)

Address	Name	Bit 7	Bit 6	Bit 5	Bit 4	Bit 3	Bit 2	Bit 1	Bit 0	Value on POR, BOR
F68h	CCPR2H	Capture/Compare/PWM Register 2, High Byte								xxxx xxxx
F67h	CCPR2L	Capture/Compare/PWM Register 2, Low Byte								xxxx xxxx
F66h	CCP2CON	P2M<1:0>		DC2B<1:0>		CCP2M<3:0>				0000 0000
F65h	PWM2CON	P2RSEN	P2DC<6:0>							0000 0000
F64h	ECCP2AS	CCP2ASE	CCP2AS<2:0>			PSS2AC<1:0>		PSS2BD<1:0>		0000 0000
F63h	PSTR2CON	—	—	—	STR2SYNC	STR2D	STR2C	STR2B	STR2A	---0 0001
F62h	IOCB	IOCB7	IOCB6	IOCB5	IOCB4	—	—	—	—	1111 ----
F61h	WPUB	WPUB7	WPUB6	WPUB5	WPUB4	WPUB3	WPUB2	WPUB1	WPUB0	1111 1111
F60h	SLRCON(2)	—	—	—	—	—	SLRC	SLRB	SLRA	---- -111
	SLRCON(1)	—	—	—	SLRE	SLRD	SLRC	SLRB	SLRA	---1 1111
F5Fh	CCPR3H	Capture/Compare/PWM Register 3, High Byte								xxxx xxxx
F5Eh	CCPR3L	Capture/Compare/PWM Register 3, Low Byte								xxxx xxxx
F5Dh	CCP3CON	P3M<1:0>		DC3B<1:0>		CCP3M<3:0>				0000 0000
F5Ch	PWM3CON	P3RSEN	P3DC<6:0>							0000 0000
F5Bh	ECCP3AS	CCP3ASE	CCP3AS<2:0>			PSS3AC<1:0>		PSS3BD<1:0>		0000 0000
F5Ah	PSTR3CON	—	—	—	STR3SYNC	STR3D	STR3C	STR3B	STR3A	---0 0001
F59h	CCPR4H	Capture/Compare/PWM Register 4, High Byte								xxxx xxxx
F58h	CCPR4L	Capture/Compare/PWM Register 4, Low Byte								xxxx xxxx
F57h	CCP4CON	—	—	DC4B<1:0>		CCP4M<3:0>				--00 0000
F56h	CCPR5H	Capture/Compare/PWM Register 5, High Byte								xxxx xxxx
F55h	CCPR5L	Capture/Compare/PWM Register 5, Low Byte								xxxx xxxx
F54h	CCP5CON	—	—	DC5B<1:0>		CCP5M<3:0>				--00 0000
F53h	TMR4	Timer4 Register								0000 0000
F52h	PR4	Timer4 Period Register								1111 1111
F51h	T4CON	—	T4OUTPS<3:0>				TMR4ON	T4CKPS<1:0>		-000 0000
F50h	TMR5H	Holding Register for the Most Significant Byte of the 16-bit TMR5 Register								0000 0000
F4Fh	TMR5L	Least Significant Byte of the 16-bit TMR5 Register								0000 0000
F4Eh	T5CON	TMR5CS<1:0>		T5CKPS<1:0>		T5SOSCEN	$\overline{\text{T5SYNC}}$	T5RD16	TMR5ON	0000 0000
F4Dh	T5GCON	TMR5GE	T5GPOL	T5GTM	T5GSPM	T5GGO/ DONE	T5GVAL	T5GSS<1:0>		0000 0x00
F4Ch	TMR6	Timer6 Register								0000 0000
F4Bh	PR6	Timer6 Period Register								1111 1111
F4Ah	T6CON	—	T6OUTPS<3:0>				TMR6ON	T6CKPS<1:0>		-000 0000
F49h	CCPTMRS0	C3TSEL<1:0>		—	C2TSEL<1:0>		—	C1TSEL<1:0>		00-0 0-00
F48h	CCPTMRS1	—	—	—	—	C5TSEL<1:0>		C4TSEL<1:0>		---- 0000
F47h	SRCON0	SRLEN	SRCLK<2:0>			SRQEN	SRNQEN	SRPS	SRPR	0000 0000
F46h	SRCON1	SRSPE	SRSCKE	SRSC2E	SRSC1E	SRRPE	SRRCKE	SRRC2E	SRRC1E	0000 0000
F45h	CTMUCONH	CTMUEN	—	CTMUSIDL	TGEN	EDGEN	EDGSEQEN	IDISSEN	CTTRIG	0000 0000
F44h	CTMUCONL	EDG2POL	EDG2SEL<1:0>		EDG1POL	EDG1SEL<1:0>		EDG2STAT	EDG1STAT	0000 0000
F43h	CTMUICON	ITRIM<5:0>						IRNG<1:0>		0000 0000
F42h	VREFCON0	FVREN	FVRST	FVRS<1:0>		—	—	—	—	0001 ----
F41h	VREFCON1	DACEN	DACLPS	DACOE	—	DACPSS<1:0>		—	DACNSS	000- 00-0
F40h	VREFCON2	—	—	—	DACR<4:0>					---0 0000
F3Fh	PMD0	UART2MD	UART1MD	TMR6MD	TMR5MD	TMR4MD	TMR3MD	TMR2MD	TMR1MD	0000 0000
F3Eh	PMD1	MSSP2MD	MSSP1MD	—	CCP5MD	CCP4MD	CCP3MD	CCP2MD	CCP1MD	00-0 0000
F3Dh	PMD2	—	—	—	—	CTMUMD	CMP2MD	CMP1MD	ADCMD	---- 0000
F3Ch	ANSELE(1)	—	—	—	—	—	ANSE2	ANSE1	ANSE0	---- -111
F3Bh	ANSELD(1)	ANSD7	ANSD6	ANSD5	ANSD4	ANSD3	ANSD2	ANSD1	ANSD0	1111 1111

Legend: x = unknown, u = unchanged, — = unimplemented, q = value depends on condition

Note 1: PIC18(L)F4XK22 devices only.
2: PIC18(L)F2XK22 devices only.
3: PIC18(L)F23/24K22 and PIC18(L)F43/44K22 devices only.
4: PIC18(L)F26K22 and PIC18(L)F46K22 devices only.

© 2010-2016 Microchip Technology Inc.

TABLE 5-2: REGISTER FILE SUMMARY FOR PIC18(L)F2X/4XK22 DEVICES (CONTINUED)

Address	Name	Bit 7	Bit 6	Bit 5	Bit 4	Bit 3	Bit 2	Bit 1	Bit 0	Value on POR, BOR
F3Ah	ANSELC	ANSC7	ANSC6	ANSC5	ANSC4	ANSC3	ANSC2	—	—	1111 11--
F39h	ANSELB	—	—	ANSB5	ANSB4	ANSB3	ANSB2	ANSB1	ANSB0	--11 1111
F38h	ANSELA	—	—	ANSA5	—	ANSA3	ANSA2	ANSA1	ANSA0	--1- 1111

Legend: x = unknown, u = unchanged, — = unimplemented, q = value depends on condition

Note 1: PIC18(L)F4XK22 devices only.

2: PIC18(L)F2XK22 devices only.

3: PIC18(L)F23/24K22 and PIC18(L)F43/44K22 devices only.

4: PIC18(L)F26K22 and PIC18(L)F46K22 devices only.

5.4.5 STATUS REGISTER

The STATUS register, shown in Register 5-2, contains the arithmetic status of the ALU. As with any other SFR, it can be the operand for any instruction.

If the STATUS register is the destination for an instruction that affects the Z, DC, C, OV or N bits, the results of the instruction are not written; instead, the STATUS register is updated according to the instruction performed. Therefore, the result of an instruction with the STATUS register as its destination may be different than intended. As an example, `CLRF STATUS` will set the Z bit and leave the remaining Status bits unchanged (‘`000u u1uu`’).

It is recommended that only `BCF`, `BSF`, `SWAPF`, `MOVFF` and `MOVWF` instructions are used to alter the STATUS register, because these instructions do not affect the Z, C, DC, OV or N bits in the STATUS register.

For other instructions that do not affect Status bits, see the instruction set summaries in **Section 25.2 “Extended Instruction Set”** and Table 25-3.

> **Note:** The C and DC bits operate as the $\overline{\text{borrow}}$ and $\overline{\text{digit borrow}}$ bits, respectively, in subtraction.

5.5 Register Definitions: Status

REGISTER 5-2: STATUS: STATUS REGISTER

U-0	U-0	U-0	R/W-x	R/W-x	R/W-x	R/W-x	R/W-x
—	—	—	N	OV	Z	DC(1)	C(1)
bit 7							bit 0

Legend:			
R = Readable bit	W = Writable bit	U = Unimplemented bit, read as ‘0’	
-n = Value at POR	‘1’ = Bit is set	‘0’ = Bit is cleared	x = Bit is unknown

bit 7-5 **Unimplemented:** Read as ‘`0`’

bit 4 **N:** Negative bit
This bit is used for signed arithmetic (two’s complement). It indicates whether the result was negative (ALU MSB = `1`).
`1` = Result was negative
`0` = Result was positive

bit 3 **OV:** Overflow bit
This bit is used for signed arithmetic (two’s complement). It indicates an overflow of the 7-bit magnitude which causes the sign bit (bit 7 of the result) to change state.
`1` = Overflow occurred for signed arithmetic (in this arithmetic operation)
`0` = No overflow occurred

bit 2 **Z:** Zero bit
`1` = The result of an arithmetic or logic operation is zero
`0` = The result of an arithmetic or logic operation is not zero

bit 1 **DC:** Digit Carry/$\overline{\text{Borrow}}$ bit (`ADDWF`, `ADDLW`, `SUBLW`, `SUBWF` instructions)(1)
`1` = A carry-out from the 4th low-order bit of the result occurred
`0` = No carry-out from the 4th low-order bit of the result

bit 0 **C:** Carry/$\overline{\text{Borrow}}$ bit (`ADDWF`, `ADDLW`, `SUBLW`, `SUBWF` instructions)(1)
`1` = A carry-out from the Most Significant bit of the result occurred
`0` = No carry-out from the Most Significant bit of the result occurred

Note 1: For $\overline{\text{Borrow}}$, the polarity is reversed. A subtraction is executed by adding the two’s complement of the second operand. For rotate (`RRF`, `RLF`) instructions, this bit is loaded with either the high-order or low-order bit of the source register.

© 2010-2016 Microchip Technology Inc.

5.6 Data Addressing Modes

Note: The execution of some instructions in the core PIC18 instruction set are changed when the PIC18 extended instruction set is enabled. See **Section 5.7 "Data Memory and the Extended Instruction Set"** for more information.

While the program memory can be addressed in only one way – through the program counter – information in the data memory space can be addressed in several ways. For most instructions, the addressing mode is fixed. Other instructions may use up to three modes, depending on which operands are used and whether or not the extended instruction set is enabled.

The addressing modes are:

- Inherent
- Literal
- Direct
- Indirect

An additional addressing mode, Indexed Literal Offset, is available when the extended instruction set is enabled (XINST Configuration bit = 1). Its operation is discussed in greater detail in **Section 5.7.1 "Indexed Addressing with Literal Offset"**.

5.6.1 INHERENT AND LITERAL ADDRESSING

Many PIC18 control instructions do not need any argument at all; they either perform an operation that globally affects the device or they operate implicitly on one register. This addressing mode is known as Inherent Addressing. Examples include `SLEEP`, `RESET` and `DAW`.

Other instructions work in a similar way but require an additional explicit argument in the opcode. This is known as Literal Addressing mode because they require some literal value as an argument. Examples include `ADDLW` and `MOVLW`, which respectively, add or move a literal value to the W register. Other examples include `CALL` and `GOTO`, which include a 20-bit program memory address.

5.6.2 DIRECT ADDRESSING

Direct addressing specifies all or part of the source and/or destination address of the operation within the opcode itself. The options are specified by the arguments accompanying the instruction.

In the core PIC18 instruction set, bit-oriented and byte-oriented instructions use some version of direct addressing by default. All of these instructions include some 8-bit literal address as their Least Significant Byte. This address specifies either a register address in one of the banks of data RAM (**Section 5.4.3 "General Purpose Register File"**) or a location in the Access Bank (**Section 5.4.2 "Access Bank"**) as the data source for the instruction.

The Access RAM bit 'a' determines how the address is interpreted. When 'a' is '1', the contents of the BSR (**Section 5.4.1 "Bank Select Register (BSR)"**) are used with the address to determine the complete 12-bit address of the register. When 'a' is '0', the address is interpreted as being a register in the Access Bank. Addressing that uses the Access RAM is sometimes also known as Direct Forced Addressing mode.

A few instructions, such as `MOVFF`, include the entire 12-bit address (either source or destination) in their opcodes. In these cases, the BSR is ignored entirely.

The destination of the operation's results is determined by the destination bit 'd'. When 'd' is '1', the results are stored back in the source register, overwriting its original contents. When 'd' is '0', the results are stored in the W register. Instructions without the 'd' argument have a destination that is implicit in the instruction; their destination is either the target register being operated on or the W register.

5.6.3 INDIRECT ADDRESSING

Indirect addressing allows the user to access a location in data memory without giving a fixed address in the instruction. This is done by using File Select Registers (FSRs) as pointers to the locations which are to be read or written. Since the FSRs are themselves located in RAM as Special File Registers, they can also be directly manipulated under program control. This makes FSRs very useful in implementing data structures, such as tables and arrays in data memory.

The registers for indirect addressing are also implemented with Indirect File Operands (INDFs) that permit automatic manipulation of the pointer value with auto-incrementing, auto-decrementing or offsetting with another value. This allows for efficient code, using loops, such as the example of clearing an entire RAM bank in Example 5-5.

EXAMPLE 5-5: HOW TO CLEAR RAM (BANK 1) USING INDIRECT ADDRESSING

```
        LFSR    FSR0, 100h ;
NEXT    CLRF    POSTINC0   ; Clear INDF
                           ; register then
                           ; inc pointer
        BTFSS   FSR0H, 1   ; All done with
                           ; Bank1?
        BRA     NEXT       ; NO, clear next
CONTINUE                   ; YES, continue
```

5.6.3.1 FSR Registers and the INDF Operand

At the core of indirect addressing are three sets of registers: FSR0, FSR1 and FSR2. Each represents a pair of 8-bit registers, FSRnH and FSRnL. Each FSR pair holds a 12-bit value, therefore, the four upper bits of the FSRnH register are not used. The 12-bit FSR value can address the entire range of the data memory in a linear fashion. The FSR register pairs, then, serve as pointers to data memory locations.

Indirect addressing is accomplished with a set of Indirect File Operands, INDF0 through INDF2. These can be thought of as “virtual” registers: they are mapped in the SFR space but are not physically implemented. Reading or writing to a particular INDF register actually accesses its corresponding FSR register pair. A read from INDF1, for example, reads the data at the address indicated by FSR1H:FSR1L. Instructions that use the INDF registers as operands actually use the contents of their corresponding FSR as a pointer to the instruction’s target. The INDF operand is just a convenient way of using the pointer.

Because indirect addressing uses a full 12-bit address, data RAM banking is not necessary. Thus, the current contents of the BSR and the Access RAM bit have no effect on determining the target address.

5.6.3.2 FSR Registers and POSTINC, POSTDEC, PREINC and PLUSW

In addition to the INDF operand, each FSR register pair also has four additional indirect operands. Like INDF, these are “virtual” registers which cannot be directly read or written. Accessing these registers actually accesses the location to which the associated FSR register pair points, and also performs a specific action on the FSR value. They are:

- POSTDEC: accesses the location to which the FSR points, then automatically decrements the FSR by 1 afterwards
- POSTINC: accesses the location to which the FSR points, then automatically increments the FSR by 1 afterwards
- PREINC: automatically increments the FSR by one, then uses the location to which the FSR points in the operation
- PLUSW: adds the signed value of the W register (range of -127 to 128) to that of the FSR and uses the location to which the result points in the operation.

In this context, accessing an INDF register uses the value in the associated FSR register without changing it. Similarly, accessing a PLUSW register gives the FSR value an offset by that in the W register; however, neither W nor the FSR is actually changed in the operation. Accessing the other virtual registers changes the value of the FSR register.

FIGURE 5-10: INDIRECT ADDRESSING

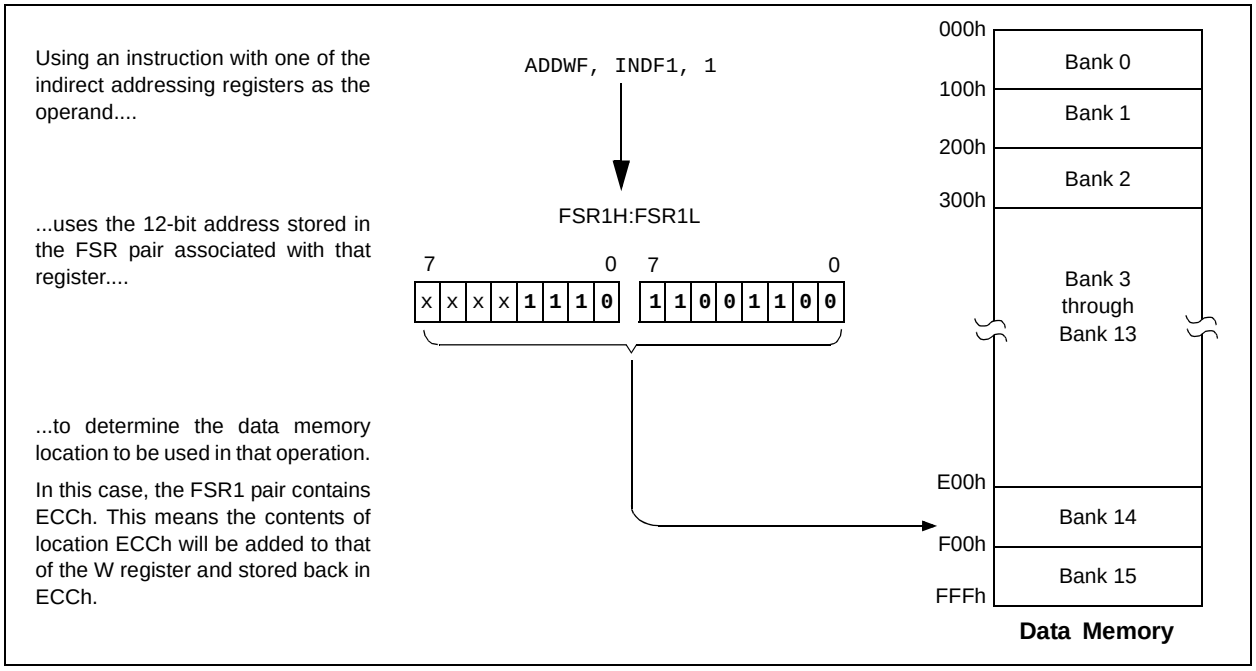

© 2010-2016 Microchip Technology Inc.

Operations on the FSRs with POSTDEC, POSTINC and PREINC affect the entire register pair; that is, rollovers of the FSRnL register from FFh to 00h carry over to the FSRnH register. On the other hand, results of these operations do not change the value of any flags in the STATUS register (e.g., Z, N, OV, etc.).

The PLUSW register can be used to implement a form of indexed addressing in the data memory space. By manipulating the value in the W register, users can reach addresses that are fixed offsets from pointer addresses. In some applications, this can be used to implement some powerful program control structure, such as software stacks, inside of data memory.

5.6.3.3 Operations by FSRs on FSRs

Indirect addressing operations that target other FSRs or virtual registers represent special cases. For example, using an FSR to point to one of the virtual registers will not result in successful operations. As a specific case, assume that FSR0H:FSR0L contains FE7h, the address of INDF1. Attempts to read the value of the INDF1 using INDF0 as an operand will return 00h. Attempts to write to INDF1 using INDF0 as the operand will result in a `NOP`.

On the other hand, using the virtual registers to write to an FSR pair may not occur as planned. In these cases, the value will be written to the FSR pair but without any incrementing or decrementing. Thus, writing to either the INDF2 or POSTDEC2 register will write the same value to the FSR2H:FSR2L.

Since the FSRs are physical registers mapped in the SFR space, they can be manipulated through all direct operations. Users should proceed cautiously when working on these registers, particularly if their code uses indirect addressing.

Similarly, operations by indirect addressing are generally permitted on all other SFRs. Users should exercise the appropriate caution that they do not inadvertently change settings that might affect the operation of the device.

5.7 Data Memory and the Extended Instruction Set

Enabling the PIC18 extended instruction set (XINST Configuration bit = `1`) significantly changes certain aspects of data memory and its addressing. Specifically, the use of the Access Bank for many of the core PIC18 instructions is different; this is due to the introduction of a new addressing mode for the data memory space.

What does not change is just as important. The size of the data memory space is unchanged, as well as its linear addressing. The SFR map remains the same. Core PIC18 instructions can still operate in both Direct and Indirect Addressing mode; inherent and literal instructions do not change at all. Indirect addressing with FSR0 and FSR1 also remain unchanged.

5.7.1 INDEXED ADDRESSING WITH LITERAL OFFSET

Enabling the PIC18 extended instruction set changes the behavior of indirect addressing using the FSR2 register pair within Access RAM. Under the proper conditions, instructions that use the Access Bank – that is, most bit-oriented and byte-oriented instructions – can invoke a form of indexed addressing using an offset specified in the instruction. This special addressing mode is known as Indexed Addressing with Literal Offset, or Indexed Literal Offset mode.

When using the extended instruction set, this addressing mode requires the following:

- The use of the Access Bank is forced (‘a’ = `0`) and
- The file address argument is less than or equal to 5Fh.

Under these conditions, the file address of the instruction is not interpreted as the lower byte of an address (used with the BSR in direct addressing), or as an 8-bit address in the Access Bank. Instead, the value is interpreted as an offset value to an Address Pointer, specified by FSR2. The offset and the contents of FSR2 are added to obtain the target address of the operation.

5.7.2 INSTRUCTIONS AFFECTED BY INDEXED LITERAL OFFSET MODE

Any of the core PIC18 instructions that can use direct addressing are potentially affected by the Indexed Literal Offset Addressing mode. This includes all byte-oriented and bit-oriented instructions, or almost one-half of the standard PIC18 instruction set. Instructions that only use Inherent or Literal Addressing modes are unaffected.

Additionally, byte-oriented and bit-oriented instructions are not affected if they do not use the Access Bank (Access RAM bit is ‘1’), or include a file address of 60h or above. Instructions meeting these criteria will continue to execute as before. A comparison of the different possible addressing modes when the extended instruction set is enabled is shown in Figure 5-11.

Those who desire to use byte-oriented or bit-oriented instructions in the Indexed Literal Offset mode should note the changes to assembler syntax for this mode. This is described in more detail in **Section 25.2.1 “Extended Instruction Syntax”**.

FIGURE 5-11: COMPARING ADDRESSING OPTIONS FOR BIT-ORIENTED AND BYTE-ORIENTED INSTRUCTIONS (EXTENDED INSTRUCTION SET ENABLED)

EXAMPLE INSTRUCTION: `ADDWF, f, d, a` (Opcode: `0010 01da ffff ffff`)

When 'a' = 0 and f ≥ 60h:

The instruction executes in Direct Forced mode. 'f' is interpreted as a location in the Access RAM between 060h and 0FFh. This is the same as locations F60h to FFFh (Bank 15) of data memory.

Locations below 60h are not available in this addressing mode.

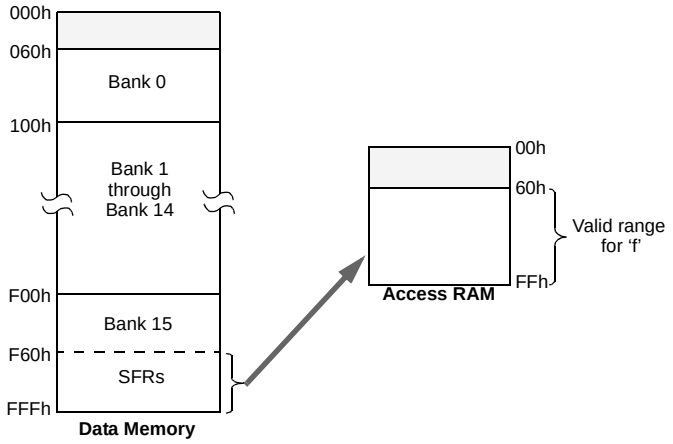

When 'a' = 0 and f ≤ 5Fh:

The instruction executes in Indexed Literal Offset mode. 'f' is interpreted as an offset to the address value in FSR2. The two are added together to obtain the address of the target register for the instruction. The address can be anywhere in the data memory space.

Note that in this mode, the correct syntax is now:
`ADDWF [k], d`
where 'k' is the same as 'f'.

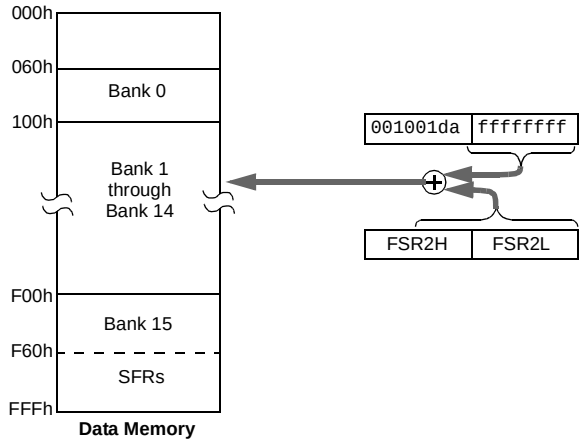

When 'a' = 1 (all values of f):

The instruction executes in Direct mode (also known as Direct Long mode). 'f' is interpreted as a location in one of the 16 banks of the data memory space. The bank is designated by the Bank Select Register (BSR). The address can be in any implemented bank in the data memory space.

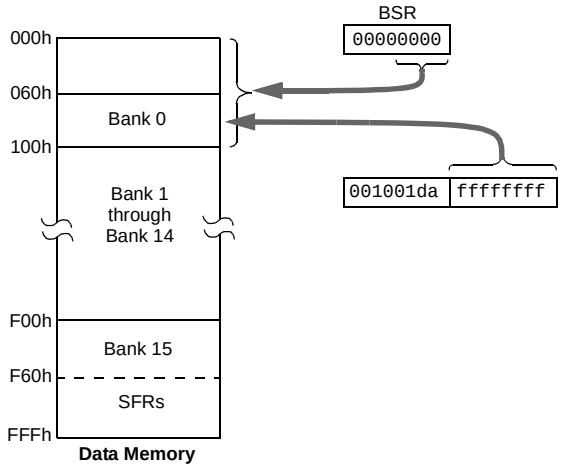

© 2010-2016 Microchip Technology Inc.

5.7.3 MAPPING THE ACCESS BANK IN INDEXED LITERAL OFFSET MODE

The use of Indexed Literal Offset Addressing mode effectively changes how the first 96 locations of Access RAM (00h to 5Fh) are mapped. Rather than containing just the contents of the bottom section of Bank 0, this mode maps the contents from a user defined “window” that can be located anywhere in the data memory space. The value of FSR2 establishes the lower boundary of the addresses mapped into the window, while the upper boundary is defined by FSR2 plus 95 (5Fh). Addresses in the Access RAM above 5Fh are mapped as previously described (see **Section 5.4.2 “Access Bank”**). An example of Access Bank remapping in this addressing mode is shown in Figure 5-12.

Remapping of the Access Bank applies *only* to operations using the Indexed Literal Offset mode. Operations that use the BSR (Access RAM bit is ‘1’) will continue to use direct addressing as before.

5.8 PIC18 Instruction Execution and the Extended Instruction Set

Enabling the extended instruction set adds eight additional commands to the existing PIC18 instruction set. These instructions are executed as described in **Section 25.2 “Extended Instruction Set”**.

FIGURE 5-12: REMAPPING THE ACCESS BANK WITH INDEXED LITERAL OFFSET ADDRESSING

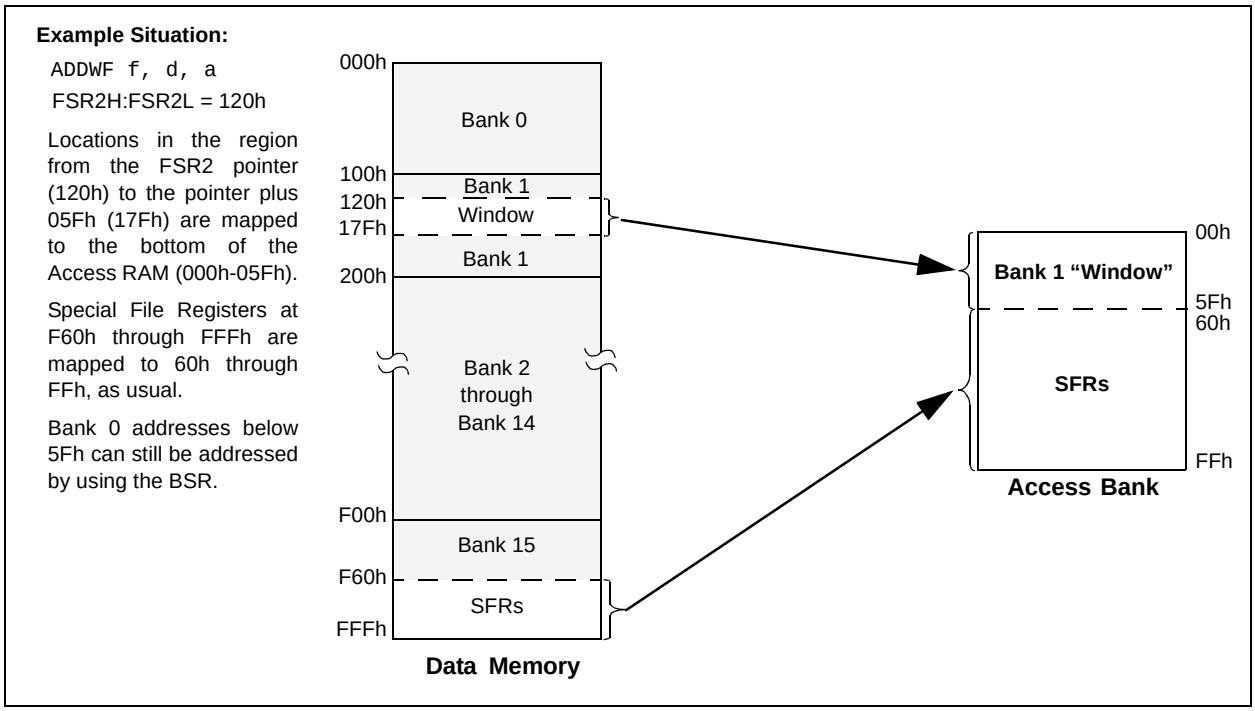

6.0 FLASH PROGRAM MEMORY

The Flash program memory is readable, writable and erasable during normal operation over the entire VDD range.

A read from program memory is executed one byte at a time. A write to program memory is executed on blocks of 64 bytes at a time. Program memory is erased in blocks of 64 bytes at a time. A bulk erase operation cannot be issued from user code.

Writing or erasing program memory will cease instruction fetches until the operation is complete. The program memory cannot be accessed during the write or erase, therefore, code cannot execute. An internal programming timer terminates program memory writes and erases.

A value written to program memory does not need to be a valid instruction. Executing a program memory location that forms an invalid instruction results in a NOP.

6.1 Table Reads and Table Writes

In order to read and write program memory, there are two operations that allow the processor to move bytes between the program memory space and the data RAM:

- Table Read (TBLRD)
- Table Write (TBLWT)

The program memory space is 16 bits wide, while the data RAM space is 8 bits wide. Table reads and table writes move data between these two memory spaces through an 8-bit register (TABLAT).

The table read operation retrieves one byte of data directly from program memory and places it into the TABLAT register. Figure 6-1 shows the operation of a table read.

The table write operation stores one byte of data from the TABLAT register into a write block holding register. The procedure to write the contents of the holding registers into program memory is detailed in **Section 6.6 "Writing to Flash Program Memory"**. Figure 6-2 shows the operation of a table write with program memory and data RAM.

Table operations work with byte entities. Tables containing data, rather than program instructions, are not required to be word aligned. Therefore, a table can start and end at any byte address. If a table write is being used to write executable code into program memory, program instructions will need to be word aligned.

FIGURE 6-1: TABLE READ OPERATION

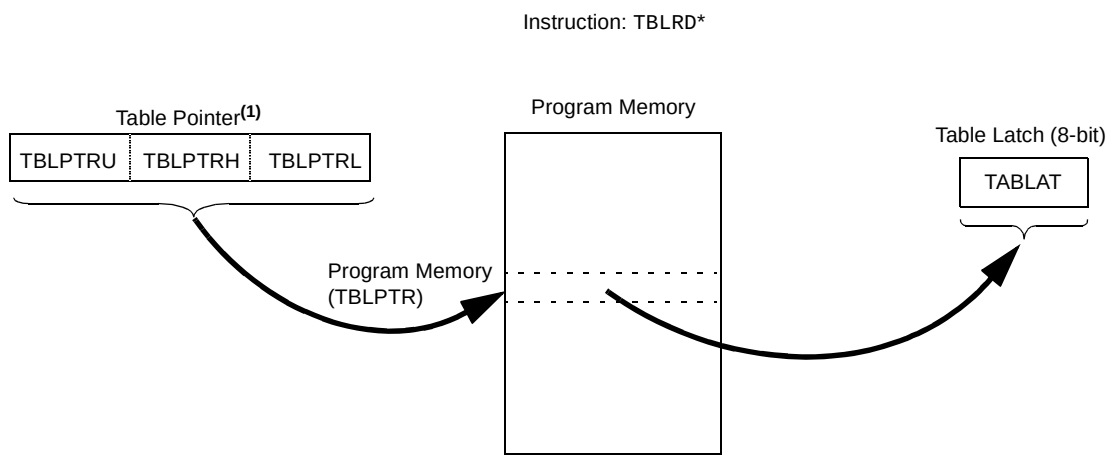

Note 1: Table Pointer register points to a byte in program memory.

© 2010-2016 Microchip Technology Inc.

FIGURE 6-2: TABLE WRITE OPERATION

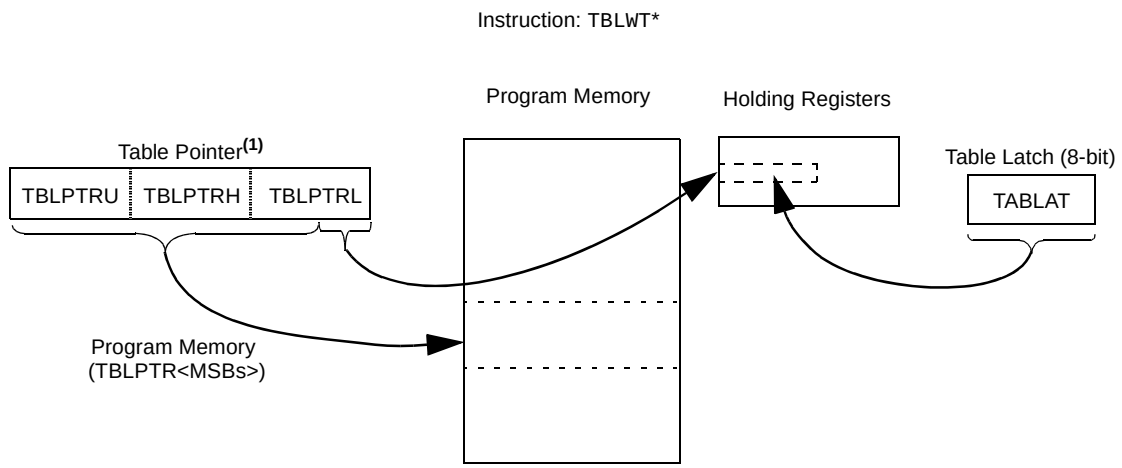

Note 1: During table writes the Table Pointer does not point directly to Program Memory. The LSBs of TBLPRTL actually point to an address within the write block holding registers. The MSBs of the Table Pointer determine where the write block will eventually be written. The process for writing the holding registers to the program memory array is discussed in **Section 6.6 "Writing to Flash Program Memory"**.

6.2 Control Registers

Several control registers are used in conjunction with the TBLRD and TBLWT instructions. These include the:

- EECON1 register
- EECON2 register
- TABLAT register
- TBLPTR registers

6.2.1 EECON1 AND EECON2 REGISTERS

The EECON1 register (Register 6-1) is the control register for memory accesses. The EECON2 register is not a physical register; it is used exclusively in the memory write and erase sequences. Reading EECON2 will read all '0's.

The EEPGD control bit determines if the access will be a program or data EEPROM memory access. When EEPGD is clear, any subsequent operations will operate on the data EEPROM memory. When EEPGD is set, any subsequent operations will operate on the program memory.

The CFGS control bit determines if the access will be to the Configuration/Calibration registers or to program memory/data EEPROM memory. When CFGS is set, subsequent operations will operate on Configuration registers regardless of EEPGD (see **Section 24.0 "Special Features of the CPU"**). When CFGS is clear, memory selection access is determined by EEPGD.

The FREE bit allows the program memory erase operation. When FREE is set, an erase operation is initiated on the next WR command. When FREE is clear, only writes are enabled.

The WREN bit, when set, will allow a write operation. The WREN bit is clear on power-up.

The WRERR bit is set by hardware when the WR bit is set and cleared when the internal programming timer expires and the write operation is complete.

Note:	During normal operation, the WRERR is read as '1'. This can indicate that a write operation was prematurely terminated by a Reset, or a write operation was attempted improperly.

The WR control bit initiates write operations. The WR bit cannot be cleared, only set, by firmware. Then WR bit is cleared by hardware at the completion of the write operation.

Note:	The EEIF interrupt flag bit of the PIR2 register is set when the write is complete. The EEIF flag stays set until cleared by firmware.

6.3 Register Definitions: Memory Control

REGISTER 6-1: EECON1: DATA EEPROM CONTROL 1 REGISTER

R/W-x	R/W-x	U-0	R/W-0	R/W-x	R/W-0	R/S-0	R/S-0
EEPGD	CFGS	—	FREE	WRERR	WREN	WR	RD
bit 7							bit 0

Legend:			
R = Readable bit	W = Writable bit		
S = Bit can be set by software, but not cleared		U = Unimplemented bit, read as ‘0’	
-n = Value at POR	‘1’ = Bit is set	‘0’ = Bit is cleared	x = Bit is unknown

bit 7 **EEPGD:** Flash Program or Data EEPROM Memory Select bit
- 1 = Access Flash program memory
- 0 = Access data EEPROM memory

bit 6 **CFGS:** Flash Program/Data EEPROM or Configuration Select bit
- 1 = Access Configuration registers
- 0 = Access Flash program or data EEPROM memory

bit 5 **Unimplemented:** Read as ‘0’

bit 4 **FREE:** Flash Row (Block) Erase Enable bit
- 1 = Erase the program memory block addressed by TBLPTR on the next WR command (cleared by completion of erase operation)
- 0 = Perform write-only

bit 3 **WRERR:** Flash Program/Data EEPROM Error Flag bit(1)
- 1 = A write operation is prematurely terminated (any Reset during self-timed programming in normal operation, or an improper write attempt)
- 0 = The write operation completed

bit 2 **WREN:** Flash Program/Data EEPROM Write Enable bit
- 1 = Allows write cycles to Flash program/data EEPROM
- 0 = Inhibits write cycles to Flash program/data EEPROM

bit 1 **WR:** Write Control bit
- 1 = Initiates a data EEPROM erase/write cycle or a program memory erase cycle or write cycle. (The operation is self-timed and the bit is cleared by hardware once write is complete. The WR bit can only be set (not cleared) by software.)
- 0 = Write cycle to the EEPROM is complete

bit 0 **RD:** Read Control bit
- 1 = Initiates an EEPROM read (Read takes one cycle. RD is cleared by hardware. The RD bit can only be set (not cleared) by software. RD bit cannot be set when EEPGD = 1 or CFGS = 1.)
- 0 = Does not initiate an EEPROM read

Note 1: When a WRERR occurs, the EEPGD and CFGS bits are not cleared. This allows tracing of the error condition.

© 2010-2016 Microchip Technology Inc.

6.3.1 TABLAT – TABLE LATCH REGISTER

The Table Latch (TABLAT) is an 8-bit register mapped into the SFR space. The Table Latch register is used to hold 8-bit data during data transfers between program memory and data RAM.

6.3.2 TBLPTR – TABLE POINTER REGISTER

The Table Pointer (TBLPTR) register addresses a byte within the program memory. The TBLPTR is comprised of three SFR registers: Table Pointer Upper Byte, Table Pointer High Byte and Table Pointer Low Byte (TBLPTRU:TBLPTRH:TBLPTRL). These three registers join to form a 22-bit wide pointer. The low-order 21 bits allow the device to address up to 2 Mbytes of program memory space. The 22nd bit allows access to the device ID, the user ID and the Configuration bits.

The Table Pointer register, TBLPTR, is used by the TBLRD and TBLWT instructions. These instructions can update the TBLPTR in one of four ways based on the table operation. These operations on the TBLPTR affect only the low-order 21 bits.

6.3.3 TABLE POINTER BOUNDARIES

TBLPTR is used in reads, writes and erases of the Flash program memory.

When a TBLRD is executed, all 22 bits of the TBLPTR determine which byte is read from program memory directly into the TABLAT register.

When a TBLWT is executed the byte in the TABLAT register is written, not to Flash memory but, to a holding register in preparation for a program memory write. The holding registers constitute a write block which varies depending on the device (see Table 6-1).The 3, 4, or 5 LSbs of the TBLPTRL register determine which specific address within the holding register block is written to. The MSBs of the Table Pointer have no effect during TBLWT operations.

When a program memory write is executed the entire holding register block is written to the Flash memory at the address determined by the MSbs of the TBLPTR. The 3, 4, or 5 LSBs are ignored during Flash memory writes. For more detail, see **Section 6.6 “Writing to Flash Program Memory”**.

When an erase of program memory is executed, the 16 MSbs of the Table Pointer register (TBLPTR<21:6>) point to the 64-byte block that will be erased. The Least Significant bits (TBLPTR<5:0>) are ignored.

Figure 6-3 describes the relevant boundaries of TBLPTR based on Flash program memory operations.

TABLE 6-1: TABLE POINTER OPERATIONS WITH TBLRD AND TBLWT INSTRUCTIONS

Example	Operation on Table Pointer
TBLRD* TBLWT*	TBLPTR is not modified
TBLRD*+ TBLWT*+	TBLPTR is incremented after the read/write
TBLRD*- TBLWT*-	TBLPTR is decremented after the read/write
TBLRD+* TBLWT+*	TBLPTR is incremented before the read/write

FIGURE 6-3: TABLE POINTER BOUNDARIES BASED ON OPERATION

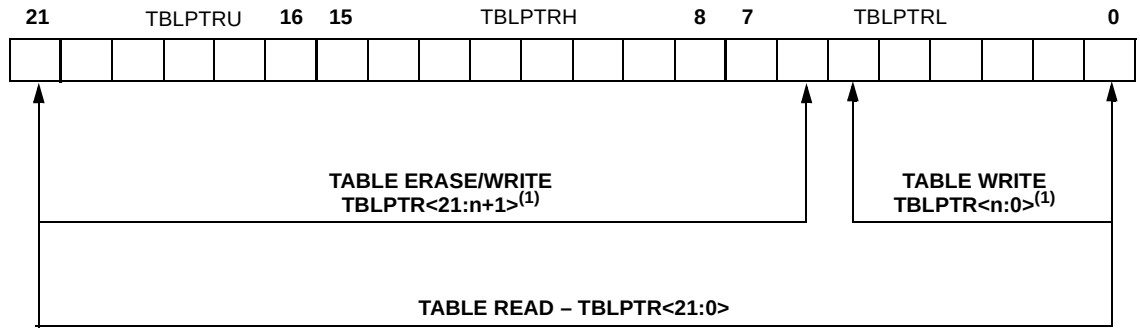

Note 1: n = 6 for block sizes of 64 bytes.

6.4 Reading the Flash Program Memory

The TBLRD instruction retrieves data from program memory and places it into data RAM. Table reads from program memory are performed one byte at a time.

TBLPTR points to a byte address in program space. Executing TBLRD places the byte pointed to into TABLAT. In addition, TBLPTR can be modified automatically for the next table read operation.

The internal program memory is typically organized by words. The Least Significant bit of the address selects between the high and low bytes of the word. Figure 6-4 shows the interface between the internal program memory and the TABLAT.

FIGURE 6-4: READS FROM FLASH PROGRAM MEMORY

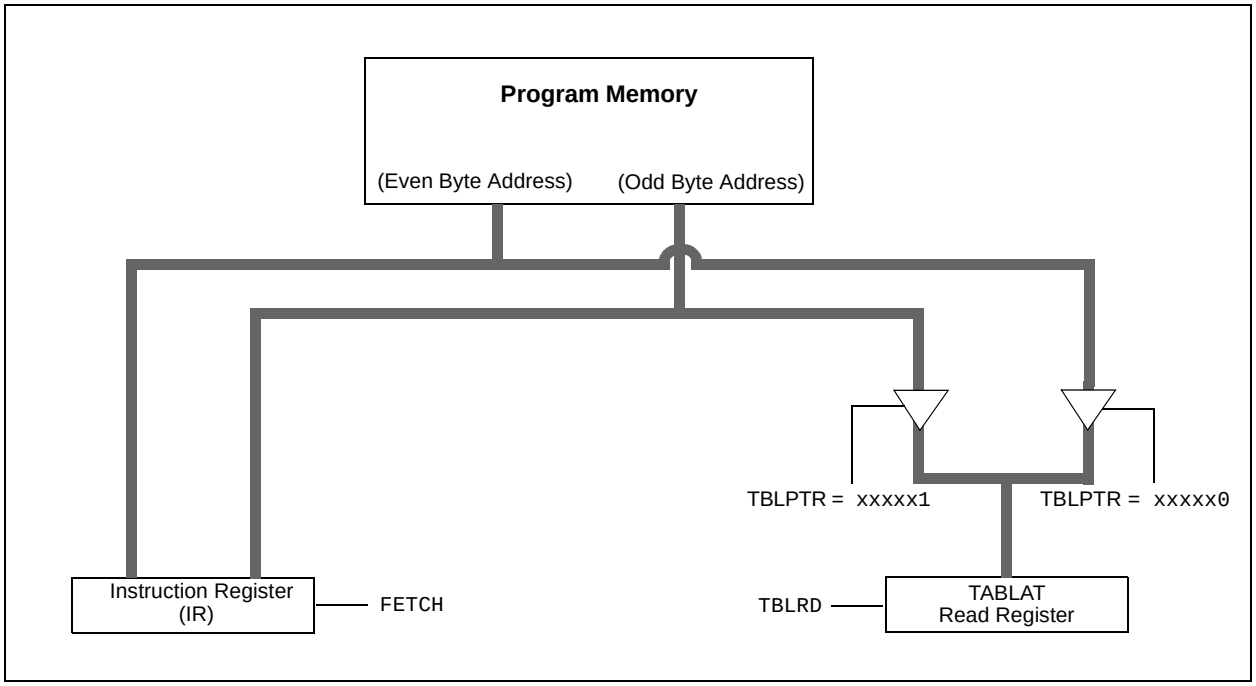

EXAMPLE 6-1: READING A FLASH PROGRAM MEMORY WORD

```
            MOVLW     CODE_ADDR_UPPER         ; Load TBLPTR with the base
            MOVWF     TBLPTRU                 ; address of the word
            MOVLW     CODE_ADDR_HIGH
            MOVWF     TBLPTRH
            MOVLW     CODE_ADDR_LOW
            MOVWF     TBLPTRL
READ_WORD
            TBLRD*+                           ; read into TABLAT and increment
            MOVF      TABLAT, W               ; get data
            MOVWF     WORD_EVEN
            TBLRD*+                           ; read into TABLAT and increment
            MOVFW     TABLAT, W               ; get data
            MOVF      WORD_ODD
```


© 2010-2016 Microchip Technology Inc.

6.5 Erasing Flash Program Memory

The minimum erase block is 32 words or 64 bytes. Only through the use of an external programmer, or through ICSP™ control, can larger blocks of program memory be bulk erased. Word erase in the Flash array is not supported.

When initiating an erase sequence from the microcontroller itself, a block of 64 bytes of program memory is erased. The Most Significant 16 bits of the TBLPTR<21:6> point to the block being erased. The TBLPTR<5:0> bits are ignored.

The EECON1 register commands the erase operation. The EEPGD bit must be set to point to the Flash program memory. The WREN bit must be set to enable write operations. The FREE bit is set to select an erase operation.

The write initiate sequence for EECON2, shown as steps 4 through 6 in **Section 6.5.1 "Flash Program Memory Erase Sequence"**, is used to guard against accidental writes. This is sometimes referred to as a long write.

A long write is necessary for erasing the internal Flash. Instruction execution is halted during the long write cycle. The long write is terminated by the internal programming timer.

6.5.1 FLASH PROGRAM MEMORY ERASE SEQUENCE

The sequence of events for erasing a block of internal program memory is:

1. Load Table Pointer register with address of block being erased.
2. Set the EECON1 register for the erase operation:
   - set EEPGD bit to point to program memory;
   - clear the CFGS bit to access program memory;
   - set WREN bit to enable writes;
   - set FREE bit to enable the erase.
3. Disable interrupts.
4. Write 55h to EECON2.
5. Write 0AAh to EECON2.
6. Set the WR bit. This will begin the block erase cycle.
7. The CPU will stall for duration of the erase (about 2 ms using internal timer).
8. Re-enable interrupts.

EXAMPLE 6-2: ERASING A FLASH PROGRAM MEMORY BLOCK

```
                MOVLW   CODE_ADDR_UPPER         ; load TBLPTR with the base
                MOVWF   TBLPTRU                 ; address of the memory block
                MOVLW   CODE_ADDR_HIGH
                MOVWF   TBLPTRH
                MOVLW   CODE_ADDR_LOW
                MOVWF   TBLPTRL
        ERASE_BLOCK
                BSF     EECON1, EEPGD           ; point to Flash program memory
                BCF     EECON1, CFGS            ; access Flash program memory
                BSF     EECON1, WREN            ; enable write to memory
                BSF     EECON1, FREE            ; enable block Erase operation
                BCF     INTCON, GIE             ; disable interrupts
    Required    MOVLW   55h
    Sequence    MOVWF   EECON2                  ; write 55h
                MOVLW   0AAh
                MOVWF   EECON2                  ; write 0AAh
                BSF     EECON1, WR              ; start erase (CPU stall)
                BSF     INTCON, GIE             ; re-enable interrupts
```

6.6 Writing to Flash Program Memory

The programming block size is 64 bytes. Word or byte programming is not supported.

Table writes are used internally to load the holding registers needed to program the Flash memory. There are only as many holding registers as there are bytes in a write block (64 bytes).

Since the Table Latch (TABLAT) is only a single byte, the `TBLWT` instruction needs to be executed 64 times for each programming operation. All of the table write operations will essentially be short writes because only the holding registers are written. After all the holding registers have been written, the programming operation of that block of memory is started by configuring the EECON1 register for a program memory write and performing the long write sequence.

The long write is necessary for programming the internal Flash. Instruction execution is halted during a long write cycle. The long write will be terminated by the internal programming timer.

The EEPROM on-chip timer controls the write time. The write/erase voltages are generated by an on-chip charge pump, rated to operate over the voltage range of the device.

> **Note:** The default value of the holding registers on device Resets and after write operations is FFh. A write of FFh to a holding register does not modify that byte. This means that individual bytes of program memory may be modified, provided that the change does not attempt to change any bit from a '0' to a '1'. When modifying individual bytes, it is not necessary to load all holding registers before executing a long write operation.

FIGURE 6-5: TABLE WRITES TO FLASH PROGRAM MEMORY

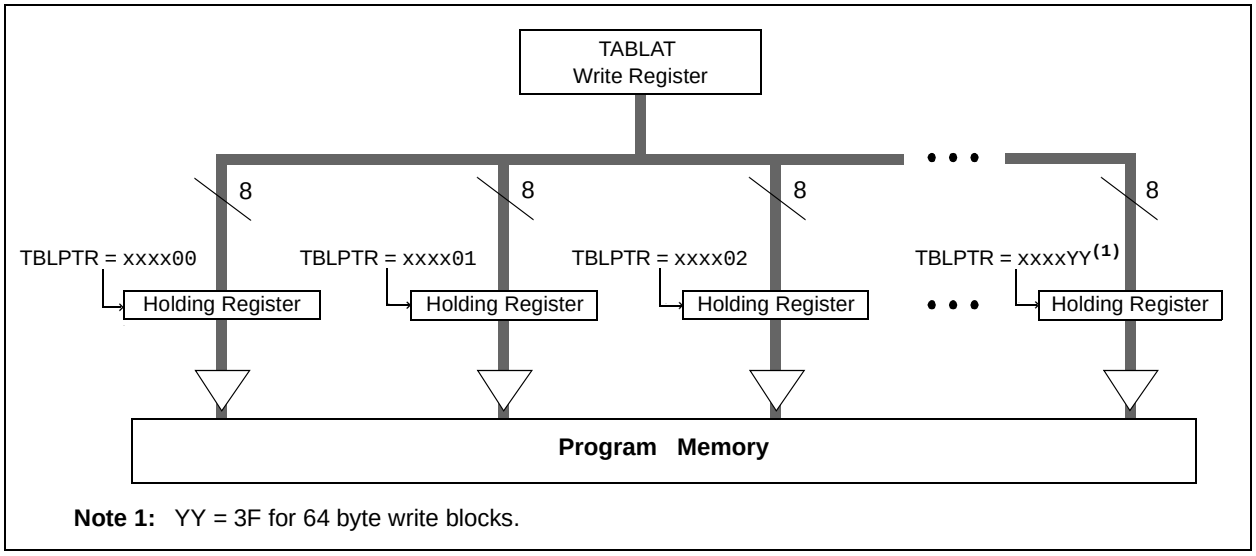

Note 1: YY = 3F for 64 byte write blocks.

6.6.1 FLASH PROGRAM MEMORY WRITE SEQUENCE

The sequence of events for programming an internal program memory location should be:

1. Read 64 bytes into RAM.
2. Update data values in RAM as necessary.
3. Load Table Pointer register with address being erased.
4. Execute the block erase procedure.
5. Load Table Pointer register with address of first byte being written.
6. Write the 64-byte block into the holding registers with auto-increment.
7. Set the EECON1 register for the write operation:
   - set EEPGD bit to point to program memory;
   - clear the CFGS bit to access program memory;
   - set WREN to enable byte writes.
8. Disable interrupts.
9. Write 55h to EECON2.
10. Write 0AAh to EECON2.
11. Set the WR bit. This will begin the write cycle.
12. The CPU will stall for duration of the write (about 2 ms using internal timer).
13. Re-enable interrupts.
14. Verify the memory (table read).

This procedure will require about 6 ms to update each write block of memory. An example of the required code is given in Example 6-3.

> **Note:** Before setting the WR bit, the Table Pointer address needs to be within the intended address range of the bytes in the holding registers.

© 2010-2016 Microchip Technology Inc.

EXAMPLE 6-3: WRITING TO FLASH PROGRAM MEMORY

```
                    MOVLW     D'64'                     ; number of bytes in erase block
                    MOVWF     COUNTER
                    MOVLW     BUFFER_ADDR_HIGH          ; point to buffer
                    MOVWF     FSR0H
                    MOVLW     BUFFER_ADDR_LOW
                    MOVWF     FSR0L
                    MOVLW     CODE_ADDR_UPPER           ; Load TBLPTR with the base
                    MOVWF     TBLPTRU                   ; address of the memory block
                    MOVLW     CODE_ADDR_HIGH
                    MOVWF     TBLPTRH
                    MOVLW     CODE_ADDR_LOW
                    MOVWF     TBLPTRL
READ_BLOCK
                    TBLRD*+                             ; read into TABLAT, and inc
                    MOVF      TABLAT, W                 ; get data
                    MOVWF     POSTINC0                  ; store data
                    DECFSZ    COUNTER                   ; done?
                    BRA       READ_BLOCK                ; repeat
MODIFY_WORD
                    MOVLW     BUFFER_ADDR_HIGH          ; point to buffer
                    MOVWF     FSR0H
                    MOVLW     BUFFER_ADDR_LOW
                    MOVWF     FSR0L
                    MOVLW     NEW_DATA_LOW              ; update buffer word
                    MOVWF     POSTINC0
                    MOVLW     NEW_DATA_HIGH
                    MOVWF     INDF0
ERASE_BLOCK
                    MOVLW     CODE_ADDR_UPPER           ; load TBLPTR with the base
                    MOVWF     TBLPTRU                   ; address of the memory block
                    MOVLW     CODE_ADDR_HIGH
                    MOVWF     TBLPTRH
                    MOVLW     CODE_ADDR_LOW
                    MOVWF     TBLPTRL
                    BSF       EECON1, EEPGD             ; point to Flash program memory
                    BCF       EECON1, CFGS              ; access Flash program memory
                    BSF       EECON1, WREN              ; enable write to memory
                    BSF       EECON1, FREE              ; enable Erase operation
                    BCF       INTCON, GIE               ; disable interrupts
                    MOVLW     55h
Required            MOVWF     EECON2                    ; write 55h
Sequence            MOVLW     0AAh
                    MOVWF     EECON2                    ; write 0AAh
                    BSF       EECON1, WR                ; start erase (CPU stall)
                    BSF       INTCON, GIE               ; re-enable interrupts
                    TBLRD*-                             ; dummy read decrement
                    MOVLW     BUFFER_ADDR_HIGH          ; point to buffer
                    MOVWF     FSR0H
                    MOVLW     BUFFER_ADDR_LOW
                    MOVWF     FSR0L
WRITE_BUFFER_BACK
                    MOVLW     BlockSize                 ; number of bytes in holding register
                    MOVWF     COUNTER
                    MOVLW     D'64'/BlockSize           ; number of write blocks in 64 bytes
                    MOVWF     COUNTER2
WRITE_BYTE_TO_HREGS
                    MOVF      POSTINC0, W               ; get low byte of buffer data
                    MOVWF     TABLAT                    ; present data to table latch
                    TBLWT+*                             ; write data, perform a short write
                                                        ; to internal TBLWT holding register.
```

EXAMPLE 6-3: WRITING TO FLASH PROGRAM MEMORY (CONTINUED)

```
                DECFSZ  COUNTER                 ; loop until holding registers are full
                BRA     WRITE_WORD_TO_HREGS
PROGRAM_MEMORY
                BSF     EECON1, EEPGD           ; point to Flash program memory
                BCF     EECON1, CFGS            ; access Flash program memory
                BSF     EECON1, WREN            ; enable write to memory
                BCF     INTCON, GIE             ; disable interrupts
                MOVLW   55h
    Required    MOVWF   EECON2                  ; write 55h
    Sequence    MOVLW   0AAh
                MOVWF   EECON2                  ; write 0AAh
                BSF     EECON1, WR              ; start program (CPU stall)
                DCFSZ   COUNTER2                ; repeat for remaining write blocks
                BRA     WRITE_BYTE_TO_HREGS     ;
                BSF     INTCON, GIE             ; re-enable interrupts
                BCF     EECON1, WREN            ; disable write to memory
```

6.6.2 WRITE VERIFY

Depending on the application, good programming practice may dictate that the value written to the memory should be verified against the original value. This should be used in applications where excessive writes can stress bits near the specification limit.

6.6.3 UNEXPECTED TERMINATION OF WRITE OPERATION

If a write is terminated by an unplanned event, such as loss of power or an unexpected Reset, the memory location just programmed should be verified and reprogrammed if needed. If the write operation is interrupted by a $\overline{\text{MCLR}}$ Reset or a WDT Time-out Reset during normal operation, the WRERR bit will be set which the user can check to decide whether a rewrite of the location(s) is needed.

6.6.4 PROTECTION AGAINST SPURIOUS WRITES

To protect against spurious writes to Flash program memory, the write initiate sequence must also be followed. See **Section 24.0 “Special Features of the CPU”** for more detail.

6.7 Flash Program Operation During Code Protection

See **Section 24.5 “Program Verification and Code Protection”** for details on code protection of Flash program memory.

TABLE 6-2: REGISTERS ASSOCIATED WITH PROGRAM FLASH MEMORY

Name	Bit 7	Bit 6	Bit 5	Bit 4	Bit 3	Bit 2	Bit 1	Bit 0	Reset Values on page
TBLPTRU	—	—	Program Memory Table Pointer Upper Byte (TBLPTR<21:16>)						—
TBLPTRH	Program Memory Table Pointer High Byte (TBLPTR<15:8>)								—
TBLPTRL	Program Memory Table Pointer Low Byte (TBLPTR<7:0>)								—
TABLAT	Program Memory Table Latch								—
INTCON	GIE/GIEH	PEIE/GIEL	TMR0IE	INT0IE	RBIE	TMR0IF	INT0IF	RBIF	109
EECON2	EEPROM Control Register 2 (not a physical register)								—
EECON1	EEPGD	CFGS	—	FREE	WRERR	WREN	WR	RD	92
IPR2	OSCFIP	C1IP	C2IP	EEIP	BCL1IP	HLVDIP	TMR3IP	CCP2IP	122
PIR2	OSCFIF	C1IF	C2IF	EEIF	BCL1IF	HLVDIF	TMR3IF	CCP2IF	113
PIE2	OSCFIE	C1IE	C2IE	EEIE	BCL1IE	HLVDIE	TMR3IE	CCP2IE	118

Legend: — = unimplemented, read as ‘0’. Shaded bits are not used during Flash/EEPROM access.

© 2010-2016 Microchip Technology Inc.

7.0 DATA EEPROM MEMORY

The data EEPROM is a nonvolatile memory array, separate from the data RAM and program memory, which is used for long-term storage of program data. It is not directly mapped in either the register file or program memory space but is indirectly addressed through the Special Function Registers (SFRs). The EEPROM is readable and writable during normal operation over the entire VDD range.

Four SFRs are used to read and write to the data EEPROM as well as the program memory. They are:

- EECON1
- EECON2
- EEDATA
- EEADR
- EEADRH

The data EEPROM allows byte read and write. When interfacing to the data memory block, EEDATA holds the 8-bit data for read/write and the EEADR:EEADRH register pair hold the address of the EEPROM location being accessed.

The EEPROM data memory is rated for high erase/write cycle endurance. A byte write automatically erases the location and writes the new data (erase-before-write). The write time is controlled by an on-chip timer; it will vary with voltage and temperature as well as from chip-to-chip. Please refer to the Data EEPROM Memory parameters in **Section 27.0 "Electrical Specifications"** for limits.

7.1 EEADR and EEADRH Registers

The EEADR register is used to address the data EEPROM for read and write operations. The 8-bit range of the register can address a memory range of 256 bytes (00h to FFh). The EEADRH register expands the range to 1024 bytes by adding an additional two address bits.

7.2 EECON1 and EECON2 Registers

Access to the data EEPROM is controlled by two registers: EECON1 and EECON2. These are the same registers which control access to the program memory and are used in a similar manner for the data EEPROM.

The EECON1 register (Register 7-1) is the control register for data and program memory access. Control bit EEPGD determines if the access will be to program or data EEPROM memory. When the EEPGD bit is clear, operations will access the data EEPROM memory. When the EEPGD bit is set, program memory is accessed.

Control bit, CFGS, determines if the access will be to the Configuration registers or to program memory/data EEPROM memory. When the CFGS bit is set, subsequent operations access Configuration registers. When the CFGS bit is clear, the EEPGD bit selects either program Flash or data EEPROM memory.

The WREN bit, when set, will allow a write operation. On power-up, the WREN bit is clear.

The WRERR bit is set by hardware when the WR bit is set and cleared when the internal programming timer expires and the write operation is complete.

Note:	During normal operation, the WRERR may read as '1'. This can indicate that a write operation was prematurely terminated by a Reset, or a write operation was attempted improperly.

The WR control bit initiates write operations. The bit can be set but not cleared by software. It is cleared only by hardware at the completion of the write operation.

Note:	The EEIF interrupt flag bit of the PIR2 register is set when the write is complete. It must be cleared by software.

Control bits, RD and WR, start read and erase/write operations, respectively. These bits are set by firmware and cleared by hardware at the completion of the operation.

The RD bit cannot be set when accessing program memory (EEPGD = 1). Program memory is read using table read instructions. See **Section 6.1 "Table Reads and Table Writes"** regarding table reads.

The EECON2 register is not a physical register. It is used exclusively in the memory write and erase sequences. Reading EECON2 will read all '0's.

REGISTER 7-1: EECON1: DATA EEPROM CONTROL 1 REGISTER

R/W-x	R/W-x	U-0	R/W-0	R/W-x	R/W-0	R/S-0	R/S-0
EEPGD	CFGS	—	FREE	WRERR	WREN	WR	RD
bit 7							bit 0

Legend:			
R = Readable bit	W = Writable bit		
S = Bit can be set by software, but not cleared		U = Unimplemented bit, read as ‘0’	
-n = Value at POR	‘1’ = Bit is set	‘0’ = Bit is cleared	x = Bit is unknown

bit 7 **EEPGD:** Flash Program or Data EEPROM Memory Select bit
- 1 = Access Flash program memory
- 0 = Access data EEPROM memory

bit 6 **CFGS:** Flash Program/Data EEPROM or Configuration Select bit
- 1 = Access Configuration registers
- 0 = Access Flash program or data EEPROM memory

bit 5 **Unimplemented:** Read as ‘0’

bit 4 **FREE:** Flash Row (Block) Erase Enable bit
- 1 = Erase the program memory block addressed by TBLPTR on the next WR command (cleared by completion of erase operation)
- 0 = Perform write-only

bit 3 **WRERR:** Flash Program/Data EEPROM Error Flag bit(1)
- 1 = A write operation is prematurely terminated (any Reset during self-timed programming in normal operation, or an improper write attempt)
- 0 = The write operation completed

bit 2 **WREN:** Flash Program/Data EEPROM Write Enable bit
- 1 = Allows write cycles to Flash program/data EEPROM
- 0 = Inhibits write cycles to Flash program/data EEPROM

bit 1 **WR:** Write Control bit
- 1 = Initiates a data EEPROM erase/write cycle or a program memory erase cycle or write cycle. (The operation is self-timed and the bit is cleared by hardware once write is complete. The WR bit can only be set (not cleared) by software.)
- 0 = Write cycle to the EEPROM is complete

bit 0 **RD:** Read Control bit
- 1 = Initiates an EEPROM read (Read takes one cycle. RD is cleared by hardware. The RD bit can only be set (not cleared) by software. RD bit cannot be set when EEPGD = 1 or CFGS = 1.)
- 0 = Does not initiate an EEPROM read

Note 1: When a WRERR occurs, the EEPGD and CFGS bits are not cleared. This allows tracing of the error condition.

© 2010-2016 Microchip Technology Inc.

7.3 Reading the Data EEPROM Memory

To read a data memory location, the user must write the address to the EEADR register, clear the EEPGD control bit of the EECON1 register and then set control bit, RD. The data is available on the very next instruction cycle; therefore, the EEDATA register can be read by the next instruction. EEDATA will hold this value until another read operation, or until it is written to by the user (during a write operation).

The basic process is shown in Example 7-1.

7.4 Writing to the Data EEPROM Memory

To write an EEPROM data location, the address must first be written to the EEADR register and the data written to the EEDATA register. The sequence in Example 7-2 must be followed to initiate the write cycle.

The write will not begin if this sequence is not exactly followed (write 55h to EECON2, write 0AAh to EECON2, then set WR bit) for each byte. It is strongly recommended that interrupts be disabled during this code segment.

Additionally, the WREN bit in EECON1 must be set to enable writes. This mechanism prevents accidental writes to data EEPROM due to unexpected code execution (i.e., runaway programs). The WREN bit should be kept clear at all times, except when updating the EEPROM. The WREN bit is not cleared by hardware.

After a write sequence has been initiated, EECON1, EEADR and EEDATA cannot be modified. The WR bit will be inhibited from being set unless the WREN bit is set. Both WR and WREN cannot be set with the same instruction.

At the completion of the write cycle, the WR bit is cleared by hardware and the EEPROM Interrupt Flag bit, EEIF, is set. The user may either enable this interrupt or poll this bit. EEIF must be cleared by software.

7.5 Write Verify

Depending on the application, good programming practice may dictate that the value written to the memory should be verified against the original value. This should be used in applications where excessive writes can stress bits near the specification limit.

EXAMPLE 7-1: DATA EEPROM READ

```
        MOVLW   DATA_EE_ADDR   ;
        MOVWF   EEADR          ; Data Memory Address to read
        BCF     EECON1, EEPGD  ; Point to DATA memory
        BCF     EECON1, CFGS   ; Access EEPROM
        BSF     EECON1, RD     ; EEPROM Read
        MOVF    EEDATA, W      ; W = EEDATA
```

EXAMPLE 7-2: DATA EEPROM WRITE

```
                MOVLW   DATA_EE_ADDR_LOW   ;
                MOVWF   EEADR              ; Data Memory Address to write
                MOVLW   DATA_EE_ADDR_HI    ;
                MOVWF   EEADRH             ;
                MOVLW   DATA_EE_DATA       ;
                MOVWF   EEDATA             ; Data Memory Value to write
                BCF     EECON1, EEPGD      ; Point to DATA memory
                BCF     EECON1, CFGS       ; Access EEPROM
                BSF     EECON1, WREN       ; Enable writes
                BCF     INTCON, GIE        ; Disable Interrupts
                MOVLW   55h                ;
   Required     MOVWF   EECON2             ; Write 55h
   Sequence     MOVLW   0AAh               ;
                MOVWF   EECON2             ; Write 0AAh
                BSF     EECON1, WR         ; Set WR bit to begin write
                BSF     INTCON, GIE        ; Enable Interrupts

                                           ; User code execution
                BCF     EECON1, WREN       ; Disable writes on write complete (EEIF set)
```

7.6 Operation During Code-Protect

Data EEPROM memory has its own code-protect bits in Configuration Words. External read and write operations are disabled if code protection is enabled.

The microcontroller itself can both read and write to the internal data EEPROM, regardless of the state of the code-protect Configuration bit. Refer to **Section 24.0 "Special Features of the CPU"** for additional information.

7.7 Protection Against Spurious Write

There are conditions when the user may not want to write to the data EEPROM memory. To protect against spurious EEPROM writes, various mechanisms have been implemented. On power-up, the WREN bit is cleared. In addition, writes to the EEPROM are blocked during the Power-up Timer period (TPWRT).The write initiate sequence and the WREN bit together help prevent an accidental write during brown-out, power glitch or software malfunction.

7.8 Using the Data EEPROM

The data EEPROM is a high-endurance, byte addressable array that has been optimized for the storage of frequently changing information (e.g., program variables or other data that are updated often). When variables in one section change frequently, while variables in another section do not change, it is possible to exceed the total number of write cycles to the EEPROM without exceeding the total number of write cycles to a single byte. Refer to the Data EEPROM Memory parameters in **Section 27.0 "Electrical Specifications"** for write cycle limits. If this is the case, then an array refresh must be performed. For this reason, variables that change infrequently (such as constants, IDs, calibration, etc.) should be stored in Flash program memory.

A simple data EEPROM refresh routine is shown in Example 7-3.

Note:	If data EEPROM is only used to store constants and/or data that changes rarely, an array refresh is likely not required. See specification.

EXAMPLE 7-3: DATA EEPROM REFRESH ROUTINE

```
        CLRF    EEADR               ; Start at address 0
        CLRF    EEADRH              ; if > 256 bytes EEPROM
        BCF     EECON1, CFGS        ; Set for memory
        BCF     EECON1, EEPGD       ; Set for Data EEPROM
        BCF     INTCON, GIE         ; Disable interrupts
        BSF     EECON1, WREN        ; Enable writes
Loop                                ; Loop to refresh array
        BSF     EECON1, RD          ; Read current address
        MOVLW   55h                 ;
        MOVWF   EECON2              ; Write 55h
        MOVLW   0AAh                ;
        MOVWF   EECON2              ; Write 0AAh
        BSF     EECON1, WR          ; Set WR bit to begin write
        BTFSC   EECON1, WR          ; Wait for write to complete
        BRA     $-2
        INCFSZ  EEADR, F            ; Increment address
        BRA     LOOP                ; Not zero, do it again
        INCFSZ  EEADRH, F           ; if > 256 bytes, Increment address
        BRA     LOOP                ; if > 256 bytes, Not zero, do it again

        BCF     EECON1, WREN        ; Disable writes
        BSF     INTCON, GIE         ; Enable interrupts
```


© 2010-2016 Microchip Technology Inc.

TABLE 7-1: REGISTERS ASSOCIATED WITH DATA EEPROM MEMORY

Name	Bit 7	Bit 6	Bit 5	Bit 4	Bit 3	Bit 2	Bit 1	Bit 0	Register on Page
INTCON	GIE/GIEH	PEIE/GIEL	TMR0IE	INT0IE	RBIE	TMR0IF	INT0IF	RBIF	109
EEADR	EEADR7	EEADR6	EEADR5	EEADR4	EEADR3	EEADR2	EEADR1	EEADR0	—
EEADRH(1)	—	—	—	—	—	—	EEADR9	EEADR8	—
EEDATA	EEPROM Data Register								—
EECON2	EEPROM Control Register 2 (not a physical register)								—
EECON1	EEPGD	CFGS	—	FREE	WRERR	WREN	WR	RD	100
IPR2	OSCFIP	C1IP	C2IP	EEIP	BCL1IP	HLVDIP	TMR3IP	CCP2IP	122
PIR2	OSCFIF	C1IF	C2IF	EEIF	BCL1IF	HLVDIF	TMR3IF	CCP2IF	113
PIE2	OSCFIE	C1IE	C2IE	EEIE	BCL1IE	HLVDIE	TMR3IE	CCP2IE	118

Legend: — = unimplemented, read as ‘0’. Shaded bits are not used during EEPROM access.

Note 1: PIC18(L)F26K22 and PIC18(L)F46K22 only.

8.0 8 x 8 HARDWARE MULTIPLIER

8.1 Introduction

All PIC18 devices include an 8 x 8 hardware multiplier as part of the ALU. The multiplier performs an unsigned operation and yields a 16-bit result that is stored in the product register pair, PRODH:PRODL. The multiplier's operation does not affect any flags in the STATUS register.

Making multiplication a hardware operation allows it to be completed in a single instruction cycle. This has the advantages of higher computational throughput and reduced code size for multiplication algorithms and allows the PIC18 devices to be used in many applications previously reserved for digital signal processors. A comparison of various hardware and software multiply operations, along with the savings in memory and execution time, is shown in Table 8-1.

8.2 Operation

Example 8-1 shows the instruction sequence for an 8 x 8 unsigned multiplication. Only one instruction is required when one of the arguments is already loaded in the WREG register.

Example 8-2 shows the sequence to do an 8 x 8 signed multiplication. To account for the sign bits of the arguments, each argument's Most Significant bit (MSb) is tested and the appropriate subtractions are done.

EXAMPLE 8-1: 8 x 8 UNSIGNED MULTIPLY ROUTINE

```
MOVF    ARG1, W     ;
MULWF   ARG2        ; ARG1 * ARG2 ->
                    ; PRODH:PRODL
```

EXAMPLE 8-2: 8 x 8 SIGNED MULTIPLY ROUTINE

```
MOVF    ARG1, W
MULWF   ARG2        ; ARG1 * ARG2 ->
                    ; PRODH:PRODL
BTFSC   ARG2, SB    ; Test Sign Bit
SUBWF   PRODH, F    ; PRODH = PRODH
                    ;         - ARG1
MOVF    ARG2, W
BTFSC   ARG1, SB    ; Test Sign Bit
SUBWF   PRODH, F    ; PRODH = PRODH
                    ;         - ARG2
```

TABLE 8-1: PERFORMANCE COMPARISON FOR VARIOUS MULTIPLY OPERATIONS

Routine	Multiply Method	Program Memory (Words)	Cycles (Max)	Time			
				@ 64 MHz	@ 40 MHz	@ 10 MHz	@ 4 MHz
8 x 8 unsigned	Without hardware multiply	13	69	4.3 µs	6.9 µs	27.6 µs	69 µs
	Hardware multiply	1	1	62.5 ns	100 ns	400 ns	1 µs
8 x 8 signed	Without hardware multiply	33	91	5.7 µs	9.1 µs	36.4 µs	91 µs
	Hardware multiply	6	6	375 ns	600 ns	2.4 µs	6 µs
16 x 16 unsigned	Without hardware multiply	21	242	15.1 µs	24.2 µs	96.8 µs	242 µs
	Hardware multiply	28	28	1.8 µs	2.8 µs	11.2 µs	28 µs
16 x 16 signed	Without hardware multiply	52	254	15.9 µs	25.4 µs	102.6 µs	254 µs
	Hardware multiply	35	40	2.5 µs	4.0 µs	16.0 µs	40 µs

© 2010-2016 Microchip Technology Inc.

Example 8-3 shows the sequence to do a 16 x 16 unsigned multiplication. Equation 8-1 shows the algorithm that is used. The 32-bit result is stored in four registers (RES<3:0>).

EQUATION 8-1: 16 x 16 UNSIGNED MULTIPLICATION ALGORITHM

$$
\begin{aligned}
RES3:RES0 &= ARG1H:ARG1L \bullet ARG2H:ARG2L \\
&= (ARG1H \bullet ARG2H \bullet 2^{16}) + \\
&\quad (ARG1H \bullet ARG2L \bullet 2^{8}) + \\
&\quad (ARG1L \bullet ARG2H \bullet 2^{8}) + \\
&\quad (ARG1L \bullet ARG2L)
\end{aligned}
$$

EXAMPLE 8-3: 16 x 16 UNSIGNED MULTIPLY ROUTINE

```
    MOVF    ARG1L, W
    MULWF   ARG2L           ; ARG1L * ARG2L->
                            ; PRODH:PRODL
    MOVFF   PRODH, RES1     ;
    MOVFF   PRODL, RES0     ;
;
    MOVF    ARG1H, W
    MULWF   ARG2H           ; ARG1H * ARG2H->
                            ; PRODH:PRODL
    MOVFF   PRODH, RES3     ;
    MOVFF   PRODL, RES2     ;
;
    MOVF    ARG1L, W
    MULWF   ARG2H           ; ARG1L * ARG2H->
                            ; PRODH:PRODL
    MOVF    PRODL, W        ;
    ADDWF   RES1, F         ; Add cross
    MOVF    PRODH, W        ; products
    ADDWFC  RES2, F         ;
    CLRF    WREG            ;
    ADDWFC  RES3, F         ;
;
    MOVF    ARG1H, W        ;
    MULWF   ARG2L           ; ARG1H * ARG2L->
                            ; PRODH:PRODL
    MOVF    PRODL, W        ;
    ADDWF   RES1, F         ; Add cross
    MOVF    PRODH, W        ; products
    ADDWFC  RES2, F         ;
    CLRF    WREG            ;
    ADDWFC  RES3, F         ;
```

Example 8-4 shows the sequence to do a 16 x 16 signed multiply. Equation 8-2 shows the algorithm used. The 32-bit result is stored in four registers (RES<3:0>). To account for the sign bits of the arguments, the MSb for each argument pair is tested and the appropriate subtractions are done.

EQUATION 8-2: 16 x 16 SIGNED MULTIPLICATION ALGORITHM

$$
\begin{aligned}
RES3:RES0 &= ARG1H:ARG1L \bullet ARG2H:ARG2L \\
&= (ARG1H \bullet ARG2H \bullet 2^{16}) + \\
&\quad (ARG1H \bullet ARG2L \bullet 2^{8}) + \\
&\quad (ARG1L \bullet ARG2H \bullet 2^{8}) + \\
&\quad (ARG1L \bullet ARG2L) + \\
&\quad (-1 \bullet ARG2H\langle 7\rangle \bullet ARG1H:ARG1L \bullet 2^{16}) + \\
&\quad (-1 \bullet ARG1H\langle 7\rangle \bullet ARG2H:ARG2L \bullet 2^{16})
\end{aligned}
$$

EXAMPLE 8-4: 16 x 16 SIGNED MULTIPLY ROUTINE

```
    MOVF    ARG1L, W
    MULWF   ARG2L           ; ARG1L * ARG2L ->
                            ; PRODH:PRODL
    MOVFF   PRODH, RES1     ;
    MOVFF   PRODL, RES0     ;
;
    MOVF    ARG1H, W
    MULWF   ARG2H           ; ARG1H * ARG2H ->
                            ; PRODH:PRODL
    MOVFF   PRODH, RES3     ;
    MOVFF   PRODL, RES2     ;
;
    MOVF    ARG1L, W
    MULWF   ARG2H           ; ARG1L * ARG2H ->
                            ; PRODH:PRODL
    MOVF    PRODL, W        ;
    ADDWF   RES1, F         ; Add cross
    MOVF    PRODH, W        ; products
    ADDWFC  RES2, F         ;
    CLRF    WREG            ;
    ADDWFC  RES3, F         ;
;
    MOVF    ARG1H, W        ;
    MULWF   ARG2L           ; ARG1H * ARG2L ->
                            ; PRODH:PRODL
    MOVF    PRODL, W        ;
    ADDWF   RES1, F         ; Add cross
    MOVF    PRODH, W        ; products
    ADDWFC  RES2, F         ;
    CLRF    WREG            ;
    ADDWFC  RES3, F         ;
;
    BTFSS   ARG2H, 7        ; ARG2H:ARG2L neg?
    BRA     SIGN_ARG1       ; no, check ARG1
    MOVF    ARG1L, W        ;
    SUBWF   RES2            ;
    MOVF    ARG1H, W        ;
    SUBWFB  RES3
;
SIGN_ARG1
    BTFSS   ARG1H, 7        ; ARG1H:ARG1L neg?
    BRA     CONT_CODE       ; no, done
    MOVF    ARG2L, W        ;
    SUBWF   RES2            ;
    MOVF    ARG2H, W        ;
    SUBWFB  RES3
;
CONT_CODE
    :
```

9.0 INTERRUPTS

The PIC18(L)F2X/4XK22 devices have multiple interrupt sources and an interrupt priority feature that allows most interrupt sources to be assigned a high or low priority level (INT0 does not have a priority bit, it is always a high priority). The high priority interrupt vector is at 0008h and the low priority interrupt vector is at 0018h. A high priority interrupt event will interrupt a low priority interrupt that may be in progress.

There are 19 registers used to control interrupt operation.

These registers are:

- INTCON, INTCON2, INTCON3
- PIR1, PIR2, PIR3, PIR4, PIR5
- PIE1, PIE2, PIE3, PIE4, PIE5
- IPR1, IPR2, IPR3, IPR4, IPR5
- RCON

It is recommended that the Microchip header files supplied with MPLAB® IDE be used for the symbolic bit names in these registers. This allows the assembler/compiler to automatically take care of the placement of these bits within the specified register.

In general, interrupt sources have three bits to control their operation. They are:

- **Flag bit** to indicate that an interrupt event occurred
- **Enable bit** that allows program execution to branch to the interrupt vector address when the flag bit is set
- **Priority bit** to select high priority or low priority

9.1 Mid-Range Compatibility

When the IPEN bit is cleared (default state), the interrupt priority feature is disabled and interrupts are compatible with PIC® microcontroller mid-range devices. In Compatibility mode, the interrupt priority bits of the IPRx registers have no effect. The PEIE/GIEL bit of the INTCON register is the global interrupt enable for the peripherals. The PEIE/GIEL bit disables only the peripheral interrupt sources and enables the peripheral interrupt sources when the GIE/GIEH bit is also set. The GIE/GIEH bit of the INTCON register is the global interrupt enable which enables all non-peripheral interrupt sources and disables all interrupt sources, including the peripherals. All interrupts branch to address 0008h in Compatibility mode.

9.2 Interrupt Priority

The interrupt priority feature is enabled by setting the IPEN bit of the RCON register. When interrupt priority is enabled the GIE/GIEH and PEIE/GIEL global interrupt enable bits of Compatibility mode are replaced by the GIEH high priority, and GIEL low priority, global interrupt enables. When set, the GIEH bit of the INTCON register enables all interrupts that have their associated IPRx register or INTCONx register priority bit set (high priority). When clear, the GIEH bit disables all interrupt sources including those selected as low priority. When clear, the GIEL bit of the INTCON register disables only the interrupts that have their associated priority bit cleared (low priority). When set, the GIEL bit enables the low priority sources when the GIEH bit is also set.

When the interrupt flag, enable bit and appropriate Global Interrupt Enable (GIE) bit are all set, the interrupt will vector immediately to address 0008h for high priority, or 0018h for low priority, depending on level of the interrupting source's priority bit. Individual interrupts can be disabled through their corresponding interrupt enable bits.

9.3 Interrupt Response

When an interrupt is responded to, the Global Interrupt Enable bit is cleared to disable further interrupts. The GIE/GIEH bit is the Global Interrupt Enable when the IPEN bit is cleared. When the IPEN bit is set, enabling interrupt priority levels, the GIEH bit is the high priority global interrupt enable and the GIEL bit is the low priority Global Interrupt Enable. High priority interrupt sources can interrupt a low priority interrupt. Low priority interrupts are not processed while high priority interrupts are in progress.

The return address is pushed onto the stack and the PC is loaded with the interrupt vector address (0008h or 0018h). Once in the Interrupt Service Routine, the source(s) of the interrupt can be determined by polling the interrupt flag bits in the INTCONx and PIRx registers. The interrupt flag bits must be cleared by software before re-enabling interrupts to avoid repeating the same interrupt.

The "return from interrupt" instruction, `RETFIE`, exits the interrupt routine and sets the GIE/GIEH bit (GIEH or GIEL if priority levels are used), which re-enables interrupts.

For external interrupt events, such as the INT pins or the PORTB interrupt-on-change, the interrupt latency will be three to four instruction cycles. The exact latency is the same for one-cycle or two-cycle instructions. Individual interrupt flag bits are set, regardless of the status of their corresponding enable bits or the Global Interrupt Enable bit.

© 2010-2016 Microchip Technology Inc.

Note: Do not use the `MOVFF` instruction to modify any of the interrupt control registers while **any** interrupt is enabled. Doing so may cause erratic microcontroller behavior.

FIGURE 9-1: PIC18 INTERRUPT LOGIC

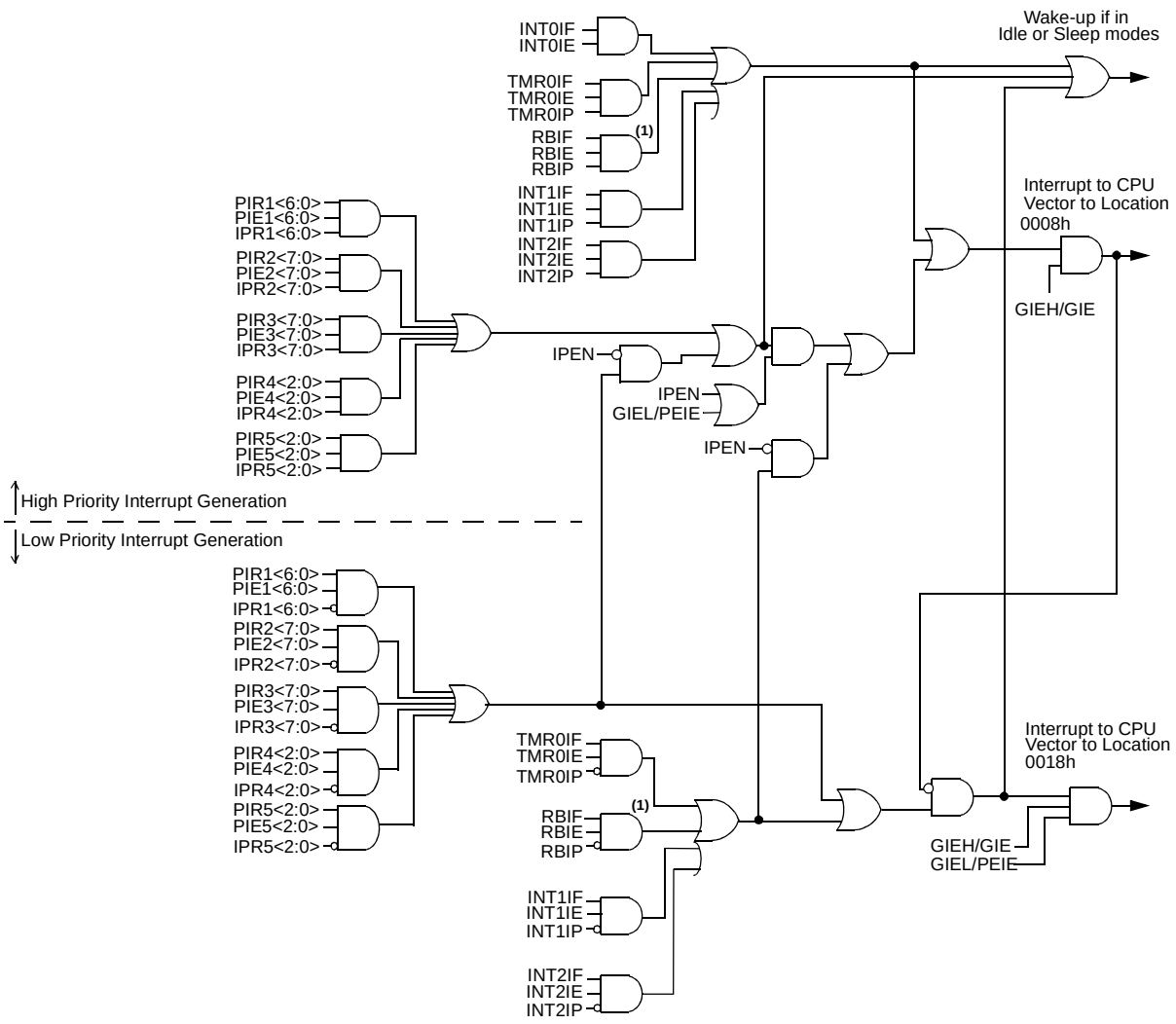

Note 1: The RBIF interrupt also requires the individual pin IOCB enables.

9.4 INTCON Registers

The INTCON registers are readable and writable registers, which contain various enable, priority and flag bits.

9.5 PIR Registers

The PIR registers contain the individual flag bits for the peripheral interrupts. Due to the number of peripheral interrupt sources, there are five Peripheral Interrupt Request Flag registers (PIR1, PIR2, PIR3, PIR4 and PIR5).

9.6 PIE Registers

The PIE registers contain the individual enable bits for the peripheral interrupts. Due to the number of peripheral interrupt sources, there are five Peripheral Interrupt Enable registers (PIE1, PIE2, PIE3, PIE4 and PIE5). When IPEN = `0`, the PEIE/GIEL bit must be set to enable any of these peripheral interrupts.

9.7 IPR Registers

The IPR registers contain the individual priority bits for the peripheral interrupts. Due to the number of peripheral interrupt sources, there are five Peripheral Interrupt Priority registers (IPR1, IPR2, IPR3, IPR4 and IPR5). Using the priority bits requires that the Interrupt Priority Enable (IPEN) bit be set.

© 2010-2016 Microchip Technology Inc.

9.8 Register Definitions: Interrupt Control

REGISTER 9-1: INTCON: INTERRUPT CONTROL REGISTER

R/W-0	R/W-0	R/W-0	R/W-0	R/W-0	R/W-0	R/W-0	R/W-x
GIE/GIEH	PEIE/GIEL	TMR0IE	INT0IE	RBIE	TMR0IF	INT0IF	RBIF
bit 7							bit 0

Legend:			
R = Readable bit	W = Writable bit	U = Unimplemented bit, read as ‘0’	
-n = Value at POR	‘1’ = Bit is set	‘0’ = Bit is cleared	x = Bit is unknown

bit 7 **GIE/GIEH:** Global Interrupt Enable bit
When IPEN = 0:
1 = Enables all unmasked interrupts
0 = Disables all interrupts including peripherals
When IPEN = 1:
1 = Enables all high priority interrupts
0 = Disables all interrupts including low priority

bit 6 **PEIE/GIEL:** Peripheral Interrupt Enable bit
When IPEN = 0:
1 = Enables all unmasked peripheral interrupts
0 = Disables all peripheral interrupts
When IPEN = 1:
1 = Enables all low priority interrupts
0 = Disables all low priority interrupts

bit 5 **TMR0IE:** TMR0 Overflow Interrupt Enable bit
1 = Enables the TMR0 overflow interrupt
0 = Disables the TMR0 overflow interrupt

bit 4 **INT0IE:** INT0 External Interrupt Enable bit
1 = Enables the INT0 external interrupt
0 = Disables the INT0 external interrupt

bit 3 **RBIE:** Port B Interrupt-On-Change (IOCx) Interrupt Enable bit(2)
1 = Enables the IOCx port change interrupt
0 = Disables the IOCx port change interrupt

bit 2 **TMR0IF:** TMR0 Overflow Interrupt Flag bit
1 = TMR0 register has overflowed (must be cleared by software)
0 = TMR0 register did not overflow

bit 1 **INT0IF:** INT0 External Interrupt Flag bit
1 = The INT0 external interrupt occurred (must be cleared by software)
0 = The INT0 external interrupt did not occur

bit 0 **RBIF:** Port B Interrupt-On-Change (IOCx) Interrupt Flag bit(1)
1 = At least one of the IOC<3:0> (RB<7:4>) pins changed state (must be cleared by software)
0 = None of the IOC<3:0> (RB<7:4>) pins have changed state

Note 1: A mismatch condition will continue to set the RBIF bit. Reading PORTB will end the mismatch condition and allow the bit to be cleared.
2: RB port change interrupts also require the individual pin IOCB enables.

Note: Interrupt flag bits are set when an interrupt condition occurs, regardless of the state of its corresponding enable bit or the global enable bit. User software should ensure the appropriate interrupt flag bits are clear prior to enabling an interrupt. This feature allows for software polling.

REGISTER 9-2: INTCON2: INTERRUPT CONTROL 2 REGISTER

R/W-1	R/W-1	R/W-1	R/W-1	U-0	R/W-1	U-0	R/W-1
$\overline{\text{RBPU}}$	INTEDG0	INTEDG1	INTEDG2	—	TMR0IP	—	RBIP
bit 7							bit 0

Legend:			
R = Readable bit	W = Writable bit	U = Unimplemented bit, read as ‘0’	
-n = Value at POR	‘1’ = Bit is set	‘0’ = Bit is cleared	x = Bit is unknown

bit 7 **$\overline{\text{RBPU}}$:** PORTB Pull-up Enable bit
`1` = All PORTB pull-ups are disabled
`0` = PORTB pull-ups are enabled provided that the pin is an input and the corresponding WPUB bit is set.

bit 6 **INTEDG0:** External Interrupt 0 Edge Select bit
`1` = Interrupt on rising edge
`0` = Interrupt on falling edge

bit 5 **INTEDG1:** External Interrupt 1 Edge Select bit
`1` = Interrupt on rising edge
`0` = Interrupt on falling edge

bit 4 **INTEDG2:** External Interrupt 2 Edge Select bit
`1` = Interrupt on rising edge
`0` = Interrupt on falling edge

bit 3 **Unimplemented:** Read as ‘`0`’

bit 2 **TMR0IP:** TMR0 Overflow Interrupt Priority bit
`1` = High priority
`0` = Low priority

bit 1 **Unimplemented:** Read as ‘`0`’

bit 0 **RBIP:** RB Port Change Interrupt Priority bit
`1` = High priority
`0` = Low priority

Note: Interrupt flag bits are set when an interrupt condition occurs, regardless of the state of its corresponding enable bit or the global enable bit. User software should ensure the appropriate interrupt flag bits are clear prior to enabling an interrupt. This feature allows for software polling.

© 2010-2016 Microchip Technology Inc.

REGISTER 9-3: INTCON3: INTERRUPT CONTROL 3 REGISTER

R/W-1	R/W-1	U-0	R/W-0	R/W-0	U-0	R/W-0	R/W-0
INT2IP	INT1IP	—	INT2IE	INT1IE	—	INT2IF	INT1IF
bit 7							bit 0

Legend:			
R = Readable bit	W = Writable bit	U = Unimplemented bit, read as ‘0’	
-n = Value at POR	‘1’ = Bit is set	‘0’ = Bit is cleared	x = Bit is unknown

bit 7 **INT2IP:** INT2 External Interrupt Priority bit
`1` = High priority
`0` = Low priority

bit 6 **INT1IP:** INT1 External Interrupt Priority bit
`1` = High priority
`0` = Low priority

bit 5 **Unimplemented:** Read as ‘`0`’

bit 4 **INT2IE:** INT2 External Interrupt Enable bit
`1` = Enables the INT2 external interrupt
`0` = Disables the INT2 external interrupt

bit 3 **INT1IE:** INT1 External Interrupt Enable bit
`1` = Enables the INT1 external interrupt
`0` = Disables the INT1 external interrupt

bit 2 **Unimplemented:** Read as ‘`0`’

bit 1 **INT2IF:** INT2 External Interrupt Flag bit
`1` = The INT2 external interrupt occurred (must be cleared by software)
`0` = The INT2 external interrupt did not occur

bit 0 **INT1IF:** INT1 External Interrupt Flag bit
`1` = The INT1 external interrupt occurred (must be cleared by software)
`0` = The INT1 external interrupt did not occur

Note: Interrupt flag bits are set when an interrupt condition occurs, regardless of the state of its corresponding enable bit or the global enable bit. User software should ensure the appropriate interrupt flag bits are clear prior to enabling an interrupt. This feature allows for software polling.

REGISTER 9-4: PIR1: PERIPHERAL INTERRUPT REQUEST (FLAG) REGISTER 1

U-0	R/W-0	R-0	R-0	R/W-0	R/W-0	R/W-0	R/W-0
—	ADIF	RC1IF	TX1IF	SSP1IF	CCP1IF	TMR2IF	TMR1IF
bit 7							bit 0

Legend:			
R = Readable bit	W = Writable bit	U = Unimplemented bit, read as ‘0’	
-n = Value at POR	‘1’ = Bit is set	‘0’ = Bit is cleared	x = Bit is unknown

bit 7 **Unimplemented:** Read as ‘0’.

bit 6 **ADIF:** A/D Converter Interrupt Flag bit
1 = An A/D conversion completed (must be cleared by software)
0 = The A/D conversion is not complete or has not been started

bit 5 **RC1IF:** EUSART1 Receive Interrupt Flag bit
1 = The EUSART1 receive buffer, RCREG1, is full (cleared when RCREG1 is read)
0 = The EUSART1 receive buffer is empty

bit 4 **TX1IF:** EUSART1 Transmit Interrupt Flag bit
1 = The EUSART1 transmit buffer, TXREG1, is empty (cleared when TXREG1 is written)
0 = The EUSART1 transmit buffer is full

bit 3 **SSP1IF:** Master Synchronous Serial Port 1 Interrupt Flag bit
1 = The transmission/reception is complete (must be cleared by software)
0 = Waiting to transmit/receive

bit 2 **CCP1IF:** CCP1 Interrupt Flag bit
Capture mode:
1 = A TMR register capture occurred (must be cleared by software)
0 = No TMR register capture occurred
Compare mode:
1 = A TMR register compare match occurred (must be cleared by software)
0 = No TMR register compare match occurred
PWM mode:
Unused in this mode

bit 1 **TMR2IF:** TMR2 to PR2 Match Interrupt Flag bit
1 = TMR2 to PR2 match occurred (must be cleared by software)
0 = No TMR2 to PR2 match occurred

bit 0 **TMR1IF:** TMR1 Overflow Interrupt Flag bit
1 = TMR1 register overflowed (must be cleared by software)
0 = TMR1 register did not overflow

Note 1: Interrupt flag bits are set when an interrupt condition occurs, regardless of the state of its corresponding enable bit or the Global Interrupt Enable bit, GIE/GIEH of the INTCON register.

Note: User software should ensure the appropriate interrupt flag bits are cleared prior to enabling an interrupt and after servicing that interrupt.

© 2010-2016 Microchip Technology Inc.

REGISTER 9-5: PIR2: PERIPHERAL INTERRUPT REQUEST (FLAG) REGISTER 2

R/W-0	R/W-0	R/W-0	R/W-0	R/W-0	R/W-0	R/W-0	R/W-0
OSCFIF	C1IF	C2IF	EEIF	BCL1IF	HLVDIF	TMR3IF	CCP2IF
bit 7							bit 0

Legend:			
R = Readable bit	W = Writable bit	U = Unimplemented bit, read as ‘0’	
-n = Value at POR	‘1’ = Bit is set	‘0’ = Bit is cleared	x = Bit is unknown

bit 7 **OSCFIF:** Oscillator Fail Interrupt Flag bit
1 = Device oscillator failed, clock input has changed to HFINTOSC (must be cleared by software)
0 = Device clock operating

bit 6 **C1IF:** Comparator C1 Interrupt Flag bit
1 = Comparator C1 output has changed (must be cleared by software)
0 = Comparator C1 output has not changed

bit 5 **C2IF:** Comparator C2 Interrupt Flag bit
1 = Comparator C2 output has changed (must be cleared by software)
0 = Comparator C2 output has not changed

bit 4 **EEIF:** Data EEPROM/Flash Write Operation Interrupt Flag bit
1 = The write operation is complete (must be cleared by software)
0 = The write operation is not complete or has not been started

bit 3 **BCL1IF:** MSSP1 Bus Collision Interrupt Flag bit
1 = A bus collision occurred (must be cleared by software)
0 = No bus collision occurred

bit 2 **HLVDIF:** Low-Voltage Detect Interrupt Flag bit
1 = A low-voltage condition occurred (direction determined by the VDIRMAG bit of the HLVDCON register)
0 = A low-voltage condition has not occurred

bit 1 **TMR3IF:** TMR3 Overflow Interrupt Flag bit
1 = TMR3 register overflowed (must be cleared by software)
0 = TMR3 register did not overflow

bit 0 **CCP2IF:** CCP2 Interrupt Flag bit
Capture mode:
1 = A TMR register capture occurred (must be cleared by software)
0 = No TMR register capture occurred
Compare mode:
1 = A TMR register compare match occurred (must be cleared by software)
0 = No TMR register compare match occurred
PWM mode:
Unused in this mode.

REGISTER 9-6: PIR3: PERIPHERAL INTERRUPT (FLAG) REGISTER 3

R/W-0	R/W-0	R/W-0	R/W-0	R/W-0	R/W-0	R/W-0	R/W-0
SSP2IF	BCL2IF	RC2IF	TX2IF	CTMUIF	TMR5GIF	TMR3GIF	TMR1GIF
bit 7							bit 0

Legend:			
R = Readable bit	W = Writable bit	U = Unimplemented bit, read as ‘0’	
-n = Value at POR	‘1’ = Bit is set	‘0’ = Bit is cleared	x = Bit is unknown

bit 7 **SSP2IF:** Synchronous Serial Port Interrupt Flag bit
1 = The transmission/reception is complete (must be cleared in software)
0 = Waiting to transmit/receive

bit 6 **BCL2IF:** MSSP2 Bus Collision Interrupt Flag bit
1 = A bus collision has occurred while the SSP2 module configured in I^2C master was transmitting (must be cleared in software)
0 = No bus collision occurred

bit 5 **RC2IF:** EUSART2 Receive Interrupt Flag bit
1 = The EUSART2 receive buffer, RCREG2, is full (cleared by reading RCREG2)
0 = The EUSART2 receive buffer is empty

bit 4 **TX2IF:** EUSART2 Transmit Interrupt Flag bit
1 = The EUSART2 transmit buffer, TXREG2, is empty (cleared by writing TXREG2)
0 = The EUSART2 transmit buffer is full

bit 3 **CTMUIF:** CTMU Interrupt Flag bit
1 = CTMU interrupt occurred (must be cleared in software)
0 = No CTMU interrupt occurred

bit 2 **TMR5GIF:** TMR5 Gate Interrupt Flag bits
1 = TMR gate interrupt occurred (must be cleared in software)
0 = No TMR gate occurred

bit 1 **TMR3GIF:** TMR3 Gate Interrupt Flag bits
1 = TMR gate interrupt occurred (must be cleared in software)
0 = No TMR gate occurred

bit 0 **TMR1GIF:** TMR1 Gate Interrupt Flag bits
1 = TMR gate interrupt occurred (must be cleared in software)
0 = No TMR gate occurred

© 2010-2016 Microchip Technology Inc.

REGISTER 9-7: PIR4: PERIPHERAL INTERRUPT (FLAG) REGISTER 4

U-0	U-0	U-0	U-0	U-0	R/W-0	R/W-0	R/W-0
—	—	—	—	—	CCP5IF	CCP4IF	CCP3IF
bit 7							bit 0

Legend:			
R = Readable bit	W = Writable bit	U = Unimplemented bit, read as ‘0’	
-n = Value at POR	‘1’ = Bit is set	‘0’ = Bit is cleared	x = Bit is unknown

bit 7-3 **Unimplemented:** Read as ‘0’

bit 2 **CCP5IF:** CCP5 Interrupt Flag bits

Capture mode:
1 = A TMR register capture occurred (must be cleared in software)
0 = No TMR register capture occurred

Compare mode:
1 = A TMR register compare match occurred (must be cleared in software)
0 = No TMR register compare match occurred

PWM mode:
Unused in PWM mode.

bit 1 **CCP4IF:** CCP4 Interrupt Flag bits

Capture mode:
1 = A TMR register capture occurred (must be cleared in software)
0 = No TMR register capture occurred

Compare mode:
1 = A TMR register compare match occurred (must be cleared in software)
0 = No TMR register compare match occurred

PWM mode:
Unused in PWM mode.

bit 0 **CCP3IF:** ECCP3 Interrupt Flag bits

Capture mode:
1 = A TMR register capture occurred (must be cleared in software)
0 = No TMR register capture occurred

Compare mode:
1 = A TMR register compare match occurred (must be cleared in software)
0 = No TMR register compare match occurred

PWM mode:
Unused in PWM mode.

REGISTER 9-8: PIR5: PERIPHERAL INTERRUPT (FLAG) REGISTER 5

U-0	U-0	U-0	U-0	U-0	R/W-0	R/W-0	R/W-0
—	—	—	—	—	TMR6IF	TMR5IF	TMR4IF
bit 7							bit 0

Legend:			
R = Readable bit	W = Writable bit	U = Unimplemented bit, read as ‘0’	
-n = Value at POR	‘1’ = Bit is set	‘0’ = Bit is cleared	x = Bit is unknown

bit 7-3 **Unimplemented:** Read as ‘0’

bit 2 **TMR6IF:** TMR6 to PR6 Match Interrupt Flag bit
1 = TMR6 to PR6 match occurred (must be cleared in software)
0 = No TMR6 to PR6 match occurred

bit 1 **TMR5IF:** TMR5 Overflow Interrupt Flag bit
1 = TMR5 register overflowed (must be cleared in software)
0 = TMR5 register did not overflow

bit 0 **TMR4IF:** TMR4 to PR4 Match Interrupt Flag bit
1 = TMR4 to PR4 match occurred (must be cleared in software)
0 = No TMR4 to PR4 match occurred

© 2010-2016 Microchip Technology Inc.

REGISTER 9-9: PIE1: PERIPHERAL INTERRUPT ENABLE (FLAG) REGISTER 1

U-0	R/W-0	R/W-0	R/W-0	R/W-0	R/W-0	R/W-0	R/W-0
—	ADIE	RC1IE	TX1IE	SSP1IE	CCP1IE	TMR2IE	TMR1IE
bit 7							bit 0

Legend:			
R = Readable bit	W = Writable bit	U = Unimplemented bit, read as ‘0’	
-n = Value at POR	‘1’ = Bit is set	‘0’ = Bit is cleared	x = Bit is unknown

bit 7 **Unimplemented:** Read as ‘0’.

bit 6 **ADIE:** A/D Converter Interrupt Enable bit
1 = Enables the A/D interrupt
0 = Disables the A/D interrupt

bit 5 **RC1IE:** EUSART1 Receive Interrupt Enable bit
1 = Enables the EUSART1 receive interrupt
0 = Disables the EUSART1 receive interrupt

bit 4 **TX1IE:** EUSART1 Transmit Interrupt Enable bit
1 = Enables the EUSART1 transmit interrupt
0 = Disables the EUSART1 transmit interrupt

bit 3 **SSP1IE:** Master Synchronous Serial Port 1 Interrupt Enable bit
1 = Enables the MSSP1 interrupt
0 = Disables the MSSP1 interrupt

bit 2 **CCP1IE:** CCP1 Interrupt Enable bit
1 = Enables the CCP1 interrupt
0 = Disables the CCP1 interrupt

bit 1 **TMR2IE:** TMR2 to PR2 Match Interrupt Enable bit
1 = Enables the TMR2 to PR2 match interrupt
0 = Disables the TMR2 to PR2 match interrupt

bit 0 **TMR1IE:** TMR1 Overflow Interrupt Enable bit
1 = Enables the TMR1 overflow interrupt
0 = Disables the TMR1 overflow interrupt

REGISTER 9-10: PIE2: PERIPHERAL INTERRUPT ENABLE (FLAG) REGISTER 2

R/W-0	R/W-0	R/W-0	R/W-0	R/W-0	R/W-0	R/W-0	R/W-0
OSCFIE	C1IE	C2IE	EEIE	BCL1IE	HLVDIE	TMR3IE	CCP2IE
bit 7							bit 0

Legend:			
R = Readable bit	W = Writable bit	U = Unimplemented bit, read as ‘0’	
-n = Value at POR	‘1’ = Bit is set	‘0’ = Bit is cleared	x = Bit is unknown

bit 7 **OSCFIE:** Oscillator Fail Interrupt Enable bit
1 = Enabled
0 = Disabled

bit 6 **C1IE:** Comparator C1 Interrupt Enable bit
1 = Enabled
0 = Disabled

bit 5 **C2IE:** Comparator C2 Interrupt Enable bit
1 = Enabled
0 = Disabled

bit 4 **EEIE:** Data EEPROM/Flash Write Operation Interrupt Enable bit
1 = Enabled
0 = Disabled

bit 3 **BCL1IE:** MSSP1 Bus Collision Interrupt Enable bit
1 = Enabled
0 = Disabled

bit 2 **HLVDIE:** Low-Voltage Detect Interrupt Enable bit
1 = Enabled
0 = Disabled

bit 1 **TMR3IE:** TMR3 Overflow Interrupt Enable bit
1 = Enabled
0 = Disabled

bit 0 **CCP2IE:** CCP2 Interrupt Enable bit
1 = Enabled
0 = Disabled

© 2010-2016 Microchip Technology Inc.

REGISTER 9-11: PIE3: PERIPHERAL INTERRUPT ENABLE (FLAG) REGISTER 3

R/W-0	R/W-0	R/W-0	R/W-0	R/W-0	R/W-0	R/W-0	R/W-0
SSP2IE	BCL2IE	RC2IE	TX2IE	CTMUIE	TMR5GIE	TMR3GIE	TMR1GIE
bit 7							bit 0

Legend:			
R = Readable bit	W = Writable bit	U = Unimplemented bit, read as ‘0’	
-n = Value at POR	‘1’ = Bit is set	‘0’ = Bit is cleared	x = Bit is unknown

bit 7 **SSP2IE:** Master Synchronous Serial Port 2 Interrupt Enable bit
1 = Enables the MSSP2 interrupt
0 = Disables the MSSP2 interrupt

bit 6 **BCL2IE:** Bus Collision Interrupt Enable bit
1 = Enabled
0 = Disabled

bit 5 **RC2IE:** EUSART2 Receive Interrupt Enable bit
1 = Enabled
0 = Disabled

bit 4 **TX2IE:** EUSART2 Transmit Interrupt Enable bit
1 = Enabled
0 = Disabled

bit 3 **CTMUIE:** CTMU Interrupt Enable bit
1 = Enabled
0 = Disabled

bit 2 **TMR5GIE:** TMR5 Gate Interrupt Enable bit
1 = Enabled
0 = Disabled

bit 1 **TMR3GIE:** TMR3 Gate Interrupt Enable bit
1 = Enabled
0 = Disabled

bit 0 **TMR1GIE:** TMR1 Gate Interrupt Enable bit
1 = Enabled
0 = Disabled

REGISTER 9-12: PIE4: PERIPHERAL INTERRUPT ENABLE (FLAG) REGISTER 4

U-0	U-0	U-0	U-0	U-0	R/W-0	R/W-0	R/W-0
—	—	—	—	—	CCP5IE	CCP4IE	CCP3IE
bit 7							bit 0

Legend:			
R = Readable bit	W = Writable bit	U = Unimplemented bit, read as ‘0’	
-n = Value at POR	‘1’ = Bit is set	‘0’ = Bit is cleared	x = Bit is unknown

bit 7-3 **Unimplemented:** Read as ‘0’

bit 2 **CCP5IE:** CCP5 Interrupt Enable bit
1 = Enabled
0 = Disabled

bit 1 **CCP4IE:** CCP4 Interrupt Enable bit
1 = Enabled
0 = Disabled

bit 0 **CCP3IE:** CCP3 Interrupt Enable bit
1 = Enabled
0 = Disabled

REGISTER 9-13: PIE5: PERIPHERAL INTERRUPT ENABLE (FLAG) REGISTER 5

U-0	U-0	U-0	U-0	U-0	R/W-0	R/W-0	R/W-0
—	—	—	—	—	TMR6IE	TMR5IE	TMR4IE
bit 7							bit 0

Legend:			
R = Readable bit	W = Writable bit	U = Unimplemented bit, read as ‘0’	
-n = Value at POR	‘1’ = Bit is set	‘0’ = Bit is cleared	x = Bit is unknown

bit 7-3 **Unimplemented:** Read as ‘0’

bit 2 **TMR6IE:** TMR6 to PR6 Match Interrupt Enable bit
1 = Enables the TMR6 to PR6 match interrupt
0 = Disables the TMR6 to PR6 match interrupt

bit 1 **TMR5IE:** TMR5 Overflow Interrupt Enable bit
1 = Enables the TMR5 overflow interrupt
0 = Disables the TMR5 overflow interrupt

bit 0 **TMR4IE:** TMR4 to PR4 Match Interrupt Enable bit
1 = Enables the TMR4 to PR4 match interrupt
0 = Disables the TMR4 to PR4 match interrupt

© 2010-2016 Microchip Technology Inc.

REGISTER 9-14: IPR1: PERIPHERAL INTERRUPT PRIORITY REGISTER 1

U-0	R/W-1	R/W-1	R/W-1	R/W-1	R/W-1	R/W-1	R/W-1
—	ADIP	RC1IP	TX1IP	SSP1IP	CCP1IP	TMR2IP	TMR1IP
bit 7							bit 0

Legend:			
R = Readable bit	W = Writable bit	U = Unimplemented bit, read as ‘0’	
-n = Value at POR	‘1’ = Bit is set	‘0’ = Bit is cleared	x = Bit is unknown

bit 7 **Unimplemented:** Read as ‘0’

bit 6 **ADIP:** A/D Converter Interrupt Priority bit
1 = High priority
0 = Low priority

bit 5 **RC1IP:** EUSART1 Receive Interrupt Priority bit
1 = High priority
0 = Low priority

bit 4 **TX1IP:** EUSART1 Transmit Interrupt Priority bit
1 = High priority
0 = Low priority

bit 3 **SSP1IP:** Master Synchronous Serial Port 1 Interrupt Priority bit
1 = High priority
0 = Low priority

bit 2 **CCP1IP:** CCP1 Interrupt Priority bit
1 = High priority
0 = Low priority

bit 1 **TMR2IP:** TMR2 to PR2 Match Interrupt Priority bit
1 = High priority
0 = Low priority

bit 0 **TMR1IP:** TMR1 Overflow Interrupt Priority bit
1 = High priority
0 = Low priority

REGISTER 9-15: IPR2: PERIPHERAL INTERRUPT PRIORITY REGISTER 2

R/W-1	R/W-1	R/W-1	R/W-1	R/W-1	R/W-1	R/W-1	R/W-1
OSCFIP	C1IP	C2IP	EEIP	BCL1IP	HLVDIP	TMR3IP	CCP2IP
bit 7							bit 0

Legend:			
R = Readable bit	W = Writable bit	U = Unimplemented bit, read as ‘0’	
-n = Value at POR	‘1’ = Bit is set	‘0’ = Bit is cleared	x = Bit is unknown

bit 7 **OSCFIP:** Oscillator Fail Interrupt Priority bit
1 = High priority
0 = Low priority

bit 6 **C1IP:** Comparator C1 Interrupt Priority bit
1 = High priority
0 = Low priority

bit 5 **C2IP:** Comparator C2 Interrupt Priority bit
1 = High priority
0 = Low priority

bit 4 **EEIP:** Data EEPROM/Flash Write Operation Interrupt Priority bit
1 = High priority
0 = Low priority

bit 3 **BCL1IP:** MSSP1 Bus Collision Interrupt Priority bit
1 = High priority
0 = Low priority

bit 2 **HLVDIP:** Low-Voltage Detect Interrupt Priority bit
1 = High priority
0 = Low priority

bit 1 **TMR3IP:** TMR3 Overflow Interrupt Priority bit
1 = High priority
0 = Low priority

bit 0 **CCP2IP:** CCP2 Interrupt Priority bit
1 = High priority
0 = Low priority

© 2010-2016 Microchip Technology Inc.

REGISTER 9-16: IPR3: PERIPHERAL INTERRUPT PRIORITY REGISTER 3

R/W-0	R/W-0	R/W-0	R/W-0	R/W-0	R/W-0	R/W-0	R/W-0
SSP2IP	BCL2IP	RC2IP	TX2IP	CTMUIP	TMR5GIP	TMR3GIP	TMR1GIP
bit 7							bit 0

Legend:			
R = Readable bit	W = Writable bit	U = Unimplemented bit, read as ‘0’	
-n = Value at POR	‘1’ = Bit is set	‘0’ = Bit is cleared	x = Bit is unknown

bit 7 **SSP2IP:** Synchronous Serial Port 2 Interrupt Priority bit
1 = High priority
0 = Low priority

bit 6 **BCL2IP:** Bus Collision 2 Interrupt Priority bit
1 = High priority
0 = Low priority

bit 5 **RC2IP:** EUSART2 Receive Interrupt Priority bit
1 = High priority
0 = Low priority

bit 4 **TX2IP:** EUSART2 Transmit Interrupt Priority bit
1 = High priority
0 = Low priority

bit 3 **CTMUIP:** CTMU Interrupt Priority bit
1 = High priority
0 = Low priority

bit 2 **TMR5GIP:** TMR5 Gate Interrupt Priority bit
1 = High priority
0 = Low priority

bit 1 **TMR3GIP:** TMR3 Gate Interrupt Priority bit
1 = High priority
0 = Low priority

bit 0 **TMR1GIP:** TMR1 Gate Interrupt Priority bit
1 = High priority
0 = Low priority

REGISTER 9-17: IPR4: PERIPHERAL INTERRUPT PRIORITY REGISTER 4

U-0	U-0	U-0	U-0	U-0	R/W-0	R/W-0	R/W-0
—	—	—	—	—	CCP5IP	CCP4IP	CCP3IP
bit 7							bit 0

Legend:			
R = Readable bit	W = Writable bit	U = Unimplemented bit, read as ‘0’	
-n = Value at POR	‘1’ = Bit is set	‘0’ = Bit is cleared	x = Bit is unknown

bit 7-3 **Unimplemented:** Read as ‘0’

bit 2 **CCP5IP:** CCP5 Interrupt Priority bit
1 = High priority
0 = Low priority

bit 1 **CCP4IP:** CCP4 Interrupt Priority bit
1 = High priority
0 = Low priority

bit 0 **CCP3IP:** CCP3 Interrupt Priority bit
1 = High priority
0 = Low priority

REGISTER 9-18: IPR5: PERIPHERAL INTERRUPT PRIORITY REGISTER 5

U-0	U-0	U-0	U-0	U-0	R/W-0	R/W-0	R/W-0
—	—	—	—	—	TMR6IP	TMR5IP	TMR4IP
bit 7							bit 0

Legend:			
R = Readable bit	W = Writable bit	U = Unimplemented bit, read as ‘0’	
-n = Value at POR	‘1’ = Bit is set	‘0’ = Bit is cleared	x = Bit is unknown

bit 7-3 **Unimplemented:** Read as ‘0’

bit 2 **TMR6IP:** TMR6 to PR6 Match Interrupt Priority bit
1 = High priority
0 = Low priority

bit 1 **TMR5IP:** TMR5 Overflow Interrupt Priority bit
1 = High priority
0 = Low priority

bit 0 **TMR4IP:** TMR4 to PR4 Match Interrupt Priority bit
1 = High priority
0 = Low priority

© 2010-2016 Microchip Technology Inc.

9.9 INTn Pin Interrupts

External interrupts on the RB0/INT0, RB1/INT1 and RB2/INT2 pins are edge-triggered. If the corresponding INTEDGx bit in the INTCON2 register is set (= 1), the interrupt is triggered by a rising edge; if the bit is clear, the trigger is on the falling edge. When a valid edge appears on the RBx/INTx pin, the corresponding flag bit, INTxF, is set. This interrupt can be disabled by clearing the corresponding enable bit, INTxE. Flag bit, INTxF, must be cleared by software in the Interrupt Service Routine before re-enabling the interrupt.

All external interrupts (INT0, INT1 and INT2) can wake-up the processor from Idle or Sleep modes if bit INTxE was set prior to going into those modes. If the Global Interrupt Enable bit, GIE/GIEH, is set, the processor will branch to the interrupt vector following wake-up.

Interrupt priority for INT1 and INT2 is determined by the value contained in the interrupt priority bits, INT1IP and INT2IP of the INTCON3 register. There is no priority bit associated with INT0. It is always a high priority interrupt source.

9.10 TMR0 Interrupt

In 8-bit mode (which is the default), an overflow in the TMR0 register (FFh → 00h) will set flag bit, TMR0IF. In 16-bit mode, an overflow in the TMR0H:TMR0L register pair (FFFFh → 0000h) will set TMR0IF. The interrupt can be enabled/disabled by setting/clearing enable bit, TMR0IE of the INTCON register. Interrupt priority for Timer0 is determined by the value contained in the interrupt priority bit, TMR0IP of the INTCON2 register. See **Section 11.0 "Timer0 Module"** for further details on the Timer0 module.

9.11 PORTB Interrupt-on-Change

An input change on PORTB<7:4> sets flag bit, RBIF of the INTCON register. The interrupt can be enabled/disabled by setting/clearing enable bit, RBIE of the INTCON register. Pins must also be individually enabled with the IOCB register. Interrupt priority for PORTB interrupt-on-change is determined by the value contained in the interrupt priority bit, RBIP of the INTCON2 register.

9.12 Context Saving During Interrupts

During interrupts, the return PC address is saved on the stack. Additionally, the WREG, STATUS and BSR registers are saved on the fast return stack. If a fast return from interrupt is not used (see **Section 5.2.1 "Fast Register Stack"**), the user may need to save the WREG, STATUS and BSR registers on entry to the Interrupt Service Routine. Depending on the user's application, other registers may also need to be saved. Example 9-1 saves and restores the WREG, STATUS and BSR registers during an Interrupt Service Routine.

EXAMPLE 9-1: SAVING STATUS, WREG AND BSR REGISTERS IN RAM

```
MOVWF     W_TEMP                          ; W_TEMP is in virtual bank
MOVFF     STATUS, STATUS_TEMP             ; STATUS_TEMP located anywhere
MOVFF     BSR, BSR_TEMP                   ; BSR_TMEP located anywhere
;
; USER ISR CODE
;
MOVFF     BSR_TEMP, BSR                   ; Restore BSR
MOVF      W_TEMP, W                       ; Restore WREG
MOVFF     STATUS_TEMP, STATUS             ; Restore STATUS
```

TABLE 9-1: REGISTERS ASSOCIATED WITH INTERRUPTS

Name	Bit 7	Bit 6	Bit 5	Bit 4	Bit 3	Bit 2	Bit 1	Bit 0	Register on Page
ANSELB	—	—	ANSB5	ANSB4	ANSB3	ANSB2	ANSB1	ANSB0	150
INTCON	GIE/GIEH	PEIE/GIEL	TMR0IE	INT0IE	RBIE	TMR0IF	INT0IF	RBIF	109
INTCON2	$\overline{\text{RBPU}}$	INTEDG0	INTEDG1	INTEDG2	—	TMR0IP	—	RBIP	110
INTCON3	INT2IP	INT1IP	—	INT2IE	INT1IE	—	INT2IF	INT1IF	111
IOCB	IOCB7	IOCB6	IOCB5	IOCB4	—	—	—	—	153
IPR1	—	ADIP	RC1IP	TX1IP	SSP1IP	CCP1IP	TMR2IP	TMR1IP	121
IPR2	OSCFIP	C1IP	C2IP	EEIP	BCL1IP	HLVDIP	TMR3IP	CCP2IP	122
IPR3	SSP2IP	BCL2IP	RC2IP	TX2IP	CTMUIP	TMR5GIP	TMR3GIP	TMR1GIP	123
IPR4	—	—	—	—	—	CCP5IP	CCP4IP	CCP3IP	124
IPR5	—	—	—	—	—	TMR6IP	TMR5IP	TMR4IP	124
PIE1	—	ADIE	RC1IE	TX1IE	SSP1IE	CCP1IE	TMR2IE	TMR1IE	117
PIE2	OSCFIE	C1IE	C2IE	EEIE	BCL1IE	HLVDIE	TMR3IE	CCP2IE	118
PIE3	SSP2IE	BCL2IE	RC2IE	TX2IE	CTMUIE	TMR5GIE	TMR3GIE	TMR1GIE	119
PIE4	—	—	—	—	—	CCP5IE	CCP4IE	CCP3IE	120
PIE5	—	—	—	—	—	TMR6IE	TMR5IE	TMR4IE	120
PIR1	—	ADIF	RC1IF	TX1IF	SSP1IF	CCP1IF	TMR2IF	TMR1IF	112
PIR2	OSCFIF	C1IF	C2IF	EEIF	BCL1IF	HLVDIF	TMR3IF	CCP2IF	113
PIR3	SSP2IF	BCL2IF	RC2IF	TX2IF	CTMUIF	TMR5GIF	TMR3GIF	TMR1GIF	114
PIR4	—	—	—	—	—	CCP5IF	CCP4IF	CCP3IF	115
PIR5	—	—	—	—	—	TMR6IF	TMR5IF	TMR4IF	116
PORTB	RB7	RB6	RB5	RB4	RB3	RB2	RB1	RB0	148
RCON	IPEN	SBOREN	—	$\overline{\text{RI}}$	$\overline{\text{TO}}$	$\overline{\text{PD}}$	$\overline{\text{POR}}$	$\overline{\text{BOR}}$	56

Legend: — = unimplemented locations, read as ‘0’. Shaded bits are not used for Interrupts.

TABLE 9-2: CONFIGURATION REGISTERS ASSOCIATED WITH INTERRUPTS

Name	Bit 7	Bit 6	Bit 5	Bit 4	Bit 3	Bit 2	Bit 1	Bit 0	Register on Page
CONFIG3H	MCLRE	—	P2BMX	T3CMX	HFOFST	CCP3MX	PBADEN	CCP2MX	348
CONFIG4L	$\overline{\text{DEBUG}}$	XINST	—	—	—	LVP	—	STRVEN	349

Legend: — = unimplemented locations, read as ‘0’. Shaded bits are not used for Interrupts.

© 2010-2016 Microchip Technology Inc.

10.0 I/O PORTS

Depending on the device selected and features enabled, there are up to five ports available. All pins of the I/O ports are multiplexed with one or more alternate functions from the peripheral features on the device. In general, when a peripheral is enabled, that pin may not be used as a general purpose I/O pin.

Each port has five registers for its operation. These registers are:

- TRIS register (data direction register)
- PORT register (reads the levels on the pins of the device)
- LAT register (output latch)
- ANSEL register (analog input control)
- SLRCON register (port slew rate control)

The Data Latch (LAT register) is useful for read-modify-write operations on the value that the I/O pins are driving.

A simplified model of a generic I/O port, without the interfaces to other peripherals, is shown in Figure 10-1.

FIGURE 10-1: GENERIC I/O PORT OPERATION

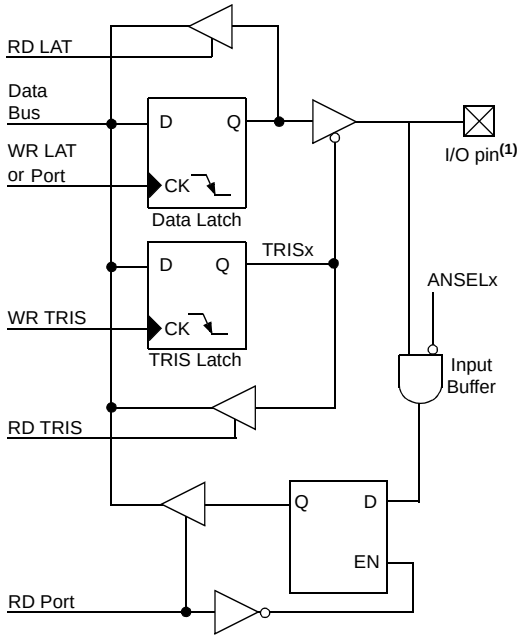

Note 1: I/O pins have diode protection to VDD and VSS.

10.1 PORTA Registers

PORTA is an 8-bit wide, bidirectional port. The corresponding data direction register is TRISA. Setting a TRISA bit (= 1) will make the corresponding PORTA pin an input (i.e., disable the output driver). Clearing a TRISA bit (= 0) will make the corresponding PORTA pin an output (i.e., enable the output driver and put the contents of the output latch on the selected pin).

Reading the PORTA register reads the status of the pins, whereas writing to it, will write to the PORT latch.

The Data Latch (LATA) register is also memory mapped. Read-modify-write operations on the LATA register read and write the latched output value for PORTA.

The RA4 pin is multiplexed with the Timer0 module clock input and one of the comparator outputs to become the RA4/T0CKI/C1OUT pin. Pins RA6 and RA7 are multiplexed with the main oscillator pins; they are enabled as oscillator or I/O pins by the selection of the main oscillator in the Configuration register (see **Section 24.1 "Configuration Bits"** for details). When they are not used as port pins, RA6 and RA7 and their associated TRIS and LAT bits are read as '0'.

The other PORTA pins are multiplexed with analog inputs, the analog VREF+ and VREF- inputs, and the comparator voltage reference output. The operation of pins RA<3:0> and RA5 as analog is selected by setting the ANSELA<5, 3:0> bits in the ANSELA register which is the default setting after a Power-on Reset.

Pins RA0 through RA5 may also be used as comparator inputs or outputs by setting the appropriate bits in the CM1CON0 and CM2CON0 registers.

Note:	On a Power-on Reset, RA5 and RA<3:0> are configured as analog inputs and read as '0'. RA4 is configured as a digital input.

The RA4/T0CKI/C1OUT pin is a Schmitt Trigger input. All other PORTA pins have TTL input levels and full CMOS output drivers.

The TRISA register controls the drivers of the PORTA pins, even when they are being used as analog inputs. The user should ensure the bits in the TRISA register are maintained set when using them as analog inputs.

EXAMPLE 10-1: INITIALIZING PORTA

```
MOVLB   0xF     ; Set BSR for banked SFRs
CLRF    PORTA   ; Initialize PORTA by
                ; clearing output
                ; data latches
CLRF    LATA    ; Alternate method
                ; to clear output
                ; data latches
MOVLW   E0h     ; Configure I/O
MOVWF   ANSELA  ; for digital inputs
MOVLW   0CFh    ; Value used to
                ; initialize data
                ; direction
MOVWF   TRISA   ; Set RA<3:0> as inputs
                ; RA<5:4> as outputs
```

TABLE 10-1: PORTA I/O SUMMARY

Pin Name	Function	TRIS Setting	ANSEL Setting	Pin Type	Buffer Type	Description
RA0/C12IN0-/AN0	RA0	0	0	O	DIG	LATA<0> data output; not affected by analog input.
		1	0	I	TTL	PORTA<0> data input; disabled when analog input enabled.
	C12IN0-	1	1	I	AN	Comparators C1 and C2 inverting input.
	AN0	1	1	I	AN	Analog input 0.
RA1/C12IN1-/AN1	RA1	0	0	O	DIG	LATA<1> data output; not affected by analog input.
		1	0	I	TTL	PORTA<1> data input; disabled when analog input enabled.
	C12IN1-	1	1	I	AN	Comparators C1 and C2 inverting input.
	AN1	1	1	I	AN	Analog input 1.
RA2/C2IN+/AN2/ DACOUT/VREF-	RA2	0	0	O	DIG	LATA<2> data output; not affected by analog input; disabled when DACOUT enabled.
		1	0	I	TTL	PORTA<2> data input; disabled when analog input enabled; disabled when DACOUT enabled.
	C2IN+	1	1	I	AN	Comparator C2 non-inverting input.
	AN2	1	1	I	AN	Analog output 2.
	DACOUT	x	1	O	AN	DAC Reference output.
	VREF-	1	1	I	AN	A/D reference voltage (low) input.
RA3/C1IN+/AN3/ VREF+	RA3	0		O	DIG	LATA<3> data output; not affected by analog input.
		1	0	I	TTL	PORTA<3> data input; disabled when analog input enabled.
	C1IN+	1	1	I	AN	Comparator C1 non-inverting input.
	AN3	1	1	I	AN	Analog input 3.
	VREF+	1	1	I	AN	A/D reference voltage (high) input.
RA4/CCP5/C1OUT/ SRQ/T0CKI	RA4	0	—	O	DIG	LATA<4> data output.
		1	—	I	ST	PORTA<4> data input; default configuration on POR.
	CCP5	0	—	O	DIG	CCP5 Compare output/PWM output, takes priority over RA4 output.
		1	—	I	ST	Capture 5 input/Compare 5 output/ PWM 5 output.
	C1OUT	0	—	O	DIG	Comparator C1 output.
	SRQ	0	—	O	DIG	SR latch Q output; take priority over CCP 5 output.
	T0CKI	1	—	I	ST	Timer0 external clock input.
RA5/C2OUT/SRNQ/ $\overline{SS1}$/ HLVDIN/AN4	RA5	0	0	O	DIG	LATA<5> data output; not affected by analog input.
		1	0	I	TTL	PORTA<5> data input; disabled when analog input enabled.
	C2OUT	0	0	O	DIG	Comparator C2 output.
	SRNQ	0	0	O	DIG	SR latch $\overline{Q}$ output.
	$\overline{SS1}$	1	0	I	TTL	SPI slave select input (MSSP1).
	HLVDIN	1	1	I	AN	High/Low-Voltage Detect input.
	AN4	1	1	I	AN	A/D input 4.
RA6/CLKO/OSC2	RA6	0	—	O	DIG	LATA<6> data output; enabled in INTOSC modes when CLKO is not enabled.
		1	—	I	TTL	PORTA<6> data input; enabled in INTOSC modes when CLKO is not enabled.
	CLKO	x	—	O	DIG	In RC mode, OSC2 pin outputs CLKOUT which has 1/4 the frequency of OSC1 and denotes the instruction cycle rate.
	OSC2	x	—	O	XTAL	Oscillator crystal output; connects to crystal or resonator in Crystal Oscillator mode.
RA7/CLKI/OSC1	RA7	0	—	O	DIG	LATA<7> data output; disabled in external oscillator modes.
		1	—	I	TTL	PORTA<7> data input; disabled in external oscillator modes.
	CLKI	x	—	I	AN	External clock source input; always associated with pin function OSC1.
	OSC1	x	—	I	XTAL	Oscillator crystal input or external clock source input ST buffer when configured in RC mode; CMOS otherwise.

Legend: AN = Analog input or output; TTL = TTL compatible input; HV = High Voltage; OD = Open Drain; XTAL = Crystal; CMOS = CMOS compatible input or output; ST = Schmitt Trigger input with CMOS levels; I^2C = Schmitt Trigger input with I^2C.

© 2010-2016 Microchip Technology Inc.

TABLE 10-2: REGISTERS ASSOCIATED WITH PORTA

Name	Bit 7	Bit 6	Bit 5	Bit 4	Bit 3	Bit 2	Bit 1	Bit 0	Register on Page
ANSELA	—	—	ANSA5	—	ANSA3	ANSA2	ANSA1	ANSA0	149
CM1CON0	C1ON	C1OUT	C1OE	C1POL	C1SP	C1R	C1CH<1:0>		308
CM2CON0	C2ON	C2OUT	C2OE	C2POL	C2SP	C2R	C2CH<1:0>		308
LATA	LATA7	LATA6	LATA5	LATA4	LATA3	LATA2	LATA1	LATA0	152
VREFCON1	DACEN	DACLPS	DACOE	—	DACPSS<1:0>		—	DACNSS	335
VREFCON2	—	—	—	DACR<4:0>					336
HLVDCON	VDIRMAG	BGVST	IRVST	HLVDEN	HLVDL<3:0>				337
PORTA	RA7	RA6	RA5	RA4	RA3	RA2	RA1	RA0	148
SLRCON	—	—	—	SLRE	SLRD	SLRC	SLRB	SLRA	153
SRCON0	SRLEN	SRCLK<2:0>			SRQEN	SRNQEN	SRPS	SRPR	329
SSP1CON1	WCOL	SSPOV	SSPEN	CKP	SSPM<3:0>				253
T0CON	TMR0ON	T08BIT	T0CS	T0SE	PSA	T0PS<2:0>			154
TRISA	TRISA7	TRISA6	TRISA5	TRISA4	TRISA3	TRISA2	TRISA1	TRISA0	151

Legend: — = unimplemented locations, read as ‘0’. Shaded bits are not used for PORTA.

TABLE 10-3: CONFIGURATION REGISTERS ASSOCIATED WITH PORTA

Name	Bit 7	Bit 6	Bit 5	Bit 4	Bit 3	Bit 2	Bit 1	Bit 0	Register on Page
CONFIG1H	IESO	FCMEN	PRICLKEN	PLLCFG	FOSC<3:0>				345

Legend: — = unimplemented locations, read as ‘0’. Shaded bits are not used for PORTA.

10.1.1 PORTA OUTPUT PRIORITY

Each PORTA pin is multiplexed with other functions. The pins, their combined functions and their output priorities are briefly described here. For additional information, refer to the appropriate section in this data sheet.

When multiple outputs are enabled, the actual pin control goes to the peripheral with the higher priority. Table 10-4 lists the PORTA pin functions from the highest to the lowest priority.

Analog input functions, such as ADC and comparator, are not shown in the priority lists.

These inputs are active when the I/O pin is set for Analog mode using the ANSELx registers. Digital output functions may control the pin when it is in Analog mode with the priority shown below.

TABLE 10-4: PORT PIN FUNCTION PRIORITY

Port bit	Port Function Priority by Port Pin				
	PORTA	**PORTB**	**PORTC**	**PORTD(2)**	**PORTE(2)**
0	RA0	CCP4(1)	SOSCO	SCL2	CCP3(8)
		RB0	P2B(6)	SCK2	P3A(8)
			RC0	RD0	RE0
1	RA1	SCL2(1)	SOSCI	SDA2	P3B
		SCK2(1)	CCP2(3)	CCP4	RE1
		P1C(1)	P2A(3)	RD1	
		RB1	RC1		
2	RA2	SDA2(1)	CCP1	P2B	CCP5
		P1B(1)	P1A	RD2(4)	RE2
		RB2	CTPLS		
			RC2		
3	RA3	SDO2(1)	SCL1	P2C	$\overline{MCLR}$
		CCP2(6)	SCK1	RD3	VPP
		P2A(6)	RC3		RE3
		RB3			
4	SRQ	P1D(1)	SDA1	SDO2	
	C1OUT	RB4	RC4	P2D	
	CCP5(1)			RD4	
	RA4				

Note 1: PIC18(L)F2XK22 devices.
2: PIC18(L)F4XK22 devices.
3: Function default pin.
4: Function default pin (28-pin devices).
5: Function default pin (40/44-pin devices).
6: Function alternate pin.
7: Function alternate pin (28-pin devices).
8: Function alternate pin (40/44-pin devices)

© 2010-2016 Microchip Technology Inc.

TABLE 10-4: PORT PIN FUNCTION PRIORITY (CONTINUED)

Port bit	Port Function Priority by Port Pin				
	PORTA	**PORTB**	**PORTC**	**PORTD(2)**	**PORTE(2)**
5	SRNQ	CCP3(3)	SDO1	P1B	
	C2OUT	P3A(3)	RC5	RD5	
	RA5	P2B(1)(4)			
		RB5			
6	OSC2	PGC	TX1/CK1	TX2/CK2	
	CLKO	TX2/CK2(1)	CCP3(1)(7)	P1C	
	RA6	RB6	P3A(1)(7)	RD6	
		ICDCK	RC6		
7	RA7				
	OSC1	PGD	RX1/DT1	RX2/DT2	
	RA7	RX2/DT2(1)	P3B(1)	P1D	
		RB7	RC7	RD7	
		ICDDT			

Note 1: PIC18(L)F2XK22 devices.
2: PIC18(L)F4XK22 devices.
3: Function default pin.
4: Function default pin (28-pin devices).
5: Function default pin (40/44-pin devices).
6: Function alternate pin.
7: Function alternate pin (28-pin devices).
8: Function alternate pin (40/44-pin devices)

10.2 PORTB Registers

PORTB is an 8-bit wide, bidirectional port. The corresponding data direction register is TRISB. Setting a TRISB bit (= 1) will make the corresponding PORTB pin an input (i.e., disable the output driver). Clearing a TRISB bit (= 0) will make the corresponding PORTB pin an output (i.e., enable the output driver and put the contents of the output latch on the selected pin).

The Data Latch register (LATB) is also memory mapped. Read-modify-write operations on the LATB register read and write the latched output value for PORTB.

EXAMPLE 10-2: INITIALIZING PORTB

```
MOVLB   0xF     ; Set BSR for banked SFRs
CLRF    PORTB   ; Initialize PORTB by
                ; clearing output
                ; data latches
CLRF    LATB    ; Alternate method
                ; to clear output
                ; data latches
MOVLW   0F0h    ; Value for init
MOVWF   ANSELB  ; Enable RB<3:0> for
                ; digital input pins
                ; (not required if config bit
                ; PBADEN is clear)
MOVLW   0CFh    ; Value used to
                ; initialize data
                ; direction
MOVWF   TRISB   ; Set RB<3:0> as inputs
                ; RB<5:4> as outputs
                ; RB<7:6> as inputs
```

10.2.1 PORTB OUTPUT PRIORITY

Each PORTB pin is multiplexed with other functions. The pins, their combined functions and their output priorities are briefly described here. For additional information, refer to the appropriate section in this data sheet.

When multiple outputs are enabled, the actual pin control goes to the peripheral with the higher priority. Table 10-4 lists the PORTB pin functions from the highest to the lowest priority.

Analog input functions, such as ADC, comparator and SR latch inputs, are not shown in the priority lists.

These inputs are active when the I/O pin is set for Analog mode using the ANSELx registers. Digital output functions may control the pin when it is in Analog mode with the priority shown below.

10.3 Additional PORTB Pin Functions

PORTB pins RB<7:4> have an interrupt-on-change option. All PORTB pins have a weak pull-up option.

10.3.1 WEAK PULL-UPS

Each of the PORTB pins has an individually controlled weak internal pull-up. When set, each bit of the WPUB register enables the corresponding pin pull-up. When cleared, the $\overline{\text{RBPU}}$ bit of the INTCON2 register enables pull-ups on all pins which also have their corresponding WPUB bit set. When set, the $\overline{\text{RBPU}}$ bit disables all weak pull-ups. The weak pull-up is automatically turned off when the port pin is configured as an output. The pull-ups are disabled on a Power-on Reset.

> **Note:** On a Power-on Reset, RB<5:0> are configured as analog inputs by default and read as '0'; RB<7:6> are configured as digital inputs.
>
> When the PBADEN Configuration bit is set to '1', RB<5:0> will alternatively be configured as digital inputs on POR.

10.3.2 INTERRUPT-ON-CHANGE

Four of the PORTB pins (RB<7:4>) are individually configurable as interrupt-on-change pins. Control bits in the IOCB register enable (when set) or disable (when clear) the interrupt function for each pin.

When set, the RBIE bit of the INTCON register enables interrupts on all pins which also have their corresponding IOCB bit set. When clear, the RBIE bit disables all interrupt-on-changes.

Only pins configured as inputs can cause this interrupt to occur (i.e., any RB<7:4> pin configured as an output is excluded from the interrupt-on-change comparison).

For enabled interrupt-on-change pins, the values are compared with the old value latched on the last read of PORTB. The 'mismatch' outputs of the last read are OR'd together to set the PORTB Change Interrupt flag bit (RBIF) in the INTCON register.

This interrupt can wake the device from the Sleep mode, or any of the Idle modes. The user, in the Interrupt Service Routine, can clear the interrupt in the following manner:

a) Any read or write of PORTB to clear the mismatch condition (except when PORTB is the source or destination of a MOVFF instruction).

b) Execute at least one instruction after reading or writing PORTB, then clear the flag bit, RBIF.

© 2010-2016 Microchip Technology Inc.

A mismatch condition will continue to set the RBIF flag bit. Reading or writing PORTB will end the mismatch condition and allow the RBIF bit to be cleared. The latch holding the last read value is not affected by a $\overline{\text{MCLR}}$ nor Brown-out Reset. After either one of these Resets, the RBIF flag will continue to be set if a mismatch is present.

Note: If a change on the I/O pin should occur when the read operation is being executed (start of the Q2 cycle), then the RBIF interrupt flag may not get set. Furthermore, since a read or write on a port affects all bits of that port, care must be taken when using multiple pins in Interrupt-on-change mode. Changes on one pin may not be seen while servicing changes on another pin.

The interrupt-on-change feature is recommended for wake-up on key depression operation and operations where PORTB is only used for the interrupt-on-change feature. Polling of PORTB is not recommended while using the interrupt-on-change feature.

10.3.3 ALTERNATE FUNCTIONS

PORTB is multiplexed with several peripheral functions (Table 10-5). The pins have TTL input buffers. Some of these pin functions can be relocated to alternate pins using the Control fuse bits in CONFIG3H. RB5 is the default pin for P2B (28-pin devices). Clearing the P2BMX bit moves the pin function to RC0. RB5 is also the default pin for the CCP3/P3A peripheral pin. Clearing the CCP3MX bit moves the pin function to the RC6 pin (28-pin devices) or RE0 (40/44-pin devices).

Two other pin functions, T3CKI and CCP2/P2A, can be relocated from their default pins to PORTB pins by clearing the control fuses in CONFIG3H. Clearing T3CMX and CCP2MX moves the pin functions to RB5 and RB3, respectively.

TABLE 10-5: PORTB I/O SUMMARY

Pin	Function	TRIS Setting	ANSEL Setting	Pin Type	Buffer Type	Description
RB0/INT0/CCP4/ FLT0/SRI/$\overline{\text{SS2}}$/ AN12	RB0	0	0	O	DIG	LATB<0> data output; not affected by analog input.
		1	0	I	TTL	PORTB<0> data input; disabled when analog input enabled.
	INT0	1	0	I	ST	External interrupt 0.
	CCP4(3)	0	0	O	DIG	Compare 4 output/PWM 4 output.
		1	0	I	ST	Capture 4 input.
	FLT0	1	0	I	ST	PWM Fault input for ECCP auto-shutdown.
	SRI	1	0	I	ST	SR latch input.
	$\overline{\text{SS2}}$(3)	1	0	I	TTL	SPI slave select input (MSSP2).
	AN12	1	1	I	AN	Analog input 12.
RB1/INT1/P1C/ SCK2/SCL2/ C12IN3-/AN10	RB1	0	0	O	DIG	LATB<1> data output; not affected by analog input.
		1	0	I	TTL	PORTB<1> data input; disabled when analog input enabled.
	INT1	1	0	I	ST	External Interrupt 1.
	P1C(3)	0	0	O	DIG	Enhanced CCP1 PWM output 3.
	SCK2(3)	0	0	O	DIG	MSSP2 SPI Clock output.
		1	0	I	ST	MSSP2 SPI Clock input.
	SCL2(3)	0	0	O	DIG	MSSP2 I^2C Clock output.
		1	0	I	I^2C	MSSP2 I^2C Clock input.
	C12IN3-	1	1	I	AN	Comparators C1 and C2 inverting input.
	AN10	1	1	I	AN	Analog input 10.

Legend: AN = Analog input or output; TTL = TTL compatible input; HV = High Voltage; OD = Open Drain; XTAL = Crystal; CMOS = CMOS compatible input or output; ST = Schmitt Trigger input with CMOS levels; I^2C = Schmitt Trigger input with I^2C.

Note 1: Default pin assignment for P2B, T3CKI, CCP3 and CCP2 when Configuration bits PB2MX, T3CMX, CCP3MX and CCP2MX are set.

2: Alternate pin assignment for P2B, T3CKI, CCP3 and CCP2 when Configuration bits PB2MX, T3CMX, CCP3MX and CCP2MX are clear.

3: Function on PORTD and PORTE for PIC18(L)F4XK22 devices.

TABLE 10-5: PORTB I/O SUMMARY (CONTINUED)

Pin	Function	TRIS Setting	ANSEL Setting	Pin Type	Buffer Type	Description
RB2/INT2/CTED1/ P1B/SDI2/SDA2/ AN8	RB2	0	0	O	DIG	LATB<2> data output; not affected by analog input.
		1	0	I	TTL	PORTB<2> data input; disabled when analog input enabled.
	INT2	1	0	I	ST	External interrupt 2.
	CTED1	1	0	I	ST	CTMU Edge 1 input.
	P1B(3)	0	0	O	DIG	Enhanced CCP1 PWM output 2.
	SDI2(3)	1	0	I	ST	MSSP2 SPI data input.
	SDA2(3)	0	0	O	DIG	MSSP2 I^2C data output.
		1	0	I	I^2C	MSSP2 I^2C data input.
	AN8	1	1	I	AN	Analog input 8.
RB3/CTED2/P2A/ CCP2/SDO2/ C12IN2-/AN9	RB3	0	0	O	DIG	LATB<3> data output; not affected by analog input.
		1	0	I	TTL	PORTB<3> data input; disabled when analog input enabled.
	CTED2	1	0	I	ST	CTMU Edge 2 input.
	P2A	0	0	O	DIG	Enhanced CCP1 PWM output 1.
	CCP2(2)	0	0	O	DIG	Compare 2 output/PWM 2 output.
		1	0	I	ST	Capture 2 input.
	SDO2(2)	0	0	O	DIG	MSSP2 SPI data output.
	C12IN2-	1	1	I	AN	Comparators C1 and C2 inverting input.
	AN9	1	1	I	AN	Analog input 9.
RB4/IOC0/P1D/ T5G/AN11	RB4	0	0	O	DIG	LATB<4> data output; not affected by analog input.
		1	0	I	TTL	PORTB<4> data input; disabled when analog input enabled.
	IOC0	1	0	I	TTL	Interrupt-on-change pin.
	P1D	0	0	O	DIG	Enhanced CCP1 PWM output 4.
	T5G	1	0	I	ST	Timer5 external clock gate input.
	AN11	1	1	I	AN	Analog input 11.
RB5/IOC1/P2B/ P3A/CCP3/T3CKI/ T1G/AN13	RB5	0	0	O	DIG	LATB<5> data output; not affected by analog input.
		1	0	I	TTL	PORTB<5> data input; disabled when analog input enabled.
	IOC1	1	0	I	TTL	Interrupt-on-change pin 1.
	P2B(1)(3)	0	0	O	DIG	Enhanced CCP2 PWM output 2.
	P3A(1)	0	0	O	DIG	Enhanced CCP3 PWM output 1.
	CCP3(1)	0	0	O	DIG	Compare 3 output/PWM 3 output.
		1	0	I	ST	Capture 3 input.
	T3CKI(2)	1	0	I	ST	Timer3 clock input.
	T1G	1	0	I	ST	Timer1 external clock gate input.
	AN13	1	1	I	AN	Analog input 13.

Legend: AN = Analog input or output; TTL = TTL compatible input; HV = High Voltage; OD = Open Drain; XTAL = Crystal; CMOS = CMOS compatible input or output; ST = Schmitt Trigger input with CMOS levels; I^2C = Schmitt Trigger input with I^2C.

Note 1: Default pin assignment for P2B, T3CKI, CCP3 and CCP2 when Configuration bits PB2MX, T3CMX, CCP3MX and CCP2MX are set.

2: Alternate pin assignment for P2B, T3CKI, CCP3 and CCP2 when Configuration bits PB2MX, T3CMX, CCP3MX and CCP2MX are clear.

3: Function on PORTD and PORTE for PIC18(L)F4XK22 devices.

© 2010-2016 Microchip Technology Inc.

TABLE 10-5: PORTB I/O SUMMARY (CONTINUED)

Pin	Function	TRIS Setting	ANSEL Setting	Pin Type	Buffer Type	Description
RB6/KBI2/PGC	RB6	0	—	O	DIG	LATB<6> data output; not affected by analog input.
		1	—	I	TTL	PORTB<6> data input; disabled when analog input enabled.
	IOC2	1	—	I	TTL	Interrupt-on-change pin.
	TX2(3)	1	—	O	DIG	EUSART asynchronous transmit data output.
	CK2(3)	1	—	O	DIG	EUSART synchronous serial clock output.
		1	—	I	ST	EUSART synchronous serial clock input.
	PGC	x	—	I	ST	In-Circuit Debugger and ICSP™ programming clock input.
RB7/KBI3/PGD	RB7	0	—	O	DIG	LATB<7> data output; not affected by analog input.
		1	—	I	TTL	PORTB<7> data input; disabled when analog input enabled.
	IOC3	1	—	I	TTL	Interrupt-on-change pin.
	RX2(2), (3)	1	—	I	ST	EUSART asynchronous receive data input.
	DT2(2), (3)	1	—	O	DIG	EUSART synchronous serial data output.
		1	—	I	ST	EUSART synchronous serial data input.
	PGD	x	—	O	DIG	In-Circuit Debugger and ICSP™ programming data output.
		x	—	I	ST	In-Circuit Debugger and ICSP™ programming data input.

Legend: AN = Analog input or output; TTL = TTL compatible input; HV = High Voltage; OD = Open Drain; XTAL = Crystal; CMOS = CMOS compatible input or output; ST = Schmitt Trigger input with CMOS levels; I^2C = Schmitt Trigger input with I^2C.

Note 1: Default pin assignment for P2B, T3CKI, CCP3 and CCP2 when Configuration bits PB2MX, T3CMX, CCP3MX and CCP2MX are set.

2: Alternate pin assignment for P2B, T3CKI, CCP3 and CCP2 when Configuration bits PB2MX, T3CMX, CCP3MX and CCP2MX are clear.

3: Function on PORTD and PORTE for PIC18(L)F4XK22 devices.

TABLE 10-6: REGISTERS ASSOCIATED WITH PORTB

Name	Bit 7	Bit 6	Bit 5	Bit 4	Bit 3	Bit 2	Bit 1	Bit 0	Register on Page
ANSELB	—	—	ANSB5	ANSB4	ANSB3	ANSB2	ANSB1	ANSB0	150
ECCP2AS	CCP2ASE	CCP2AS<2:0>			PSS2AC<1:0>		PSS2BD<1:0>		202
CCP2CON	P2M<1:0>		DC2B<1:0>		CCP2M<3:0>				198
ECCP3AS	CCP3ASE	CCP3AS<2:0>			PSS3AC<1:0>		PSS3BD<1:0>		202
CCP3CON	P3M<1:0>		DC3B<1:0>		CCP3M<3:0>				198
INTCON	GIE/GIEH	PEIE/GIEL	TMR0IE	INT0IE	RBIE	TMR0IF	INT0IF	RBIF	109
INTCON2	$\overline{\text{RBPU}}$	INTEDG0	INTEDG1	INTEDG2	—	TMR0IP	—	RBIP	110
INTCON3	INT2IP	INT1IP	—	INT2IE	INT1IE	—	INT2IF	INT1IF	111
IOCB	IOCB7	IOCB6	IOCB5	IOCB4	—	—	—	—	153
LATB	LATB7	LATB6	LATB5	LATB4	LATB3	LATB2	LATB1	LATB0	152
PORTB	RB7	RB6	RB5	RB4	RB3	RB2	RB1	RB0	148
SLRCON	—	—	—	SLRE(1)	SLRD(1)	SLRC	SLRB	SLRA	153
T1GCON	TMR1GE	T1GPOL	T1GTM	T1GSPM	T1GGO/$\overline{\text{DONE}}$	T1GVAL	T1GSS<1:0>		167
T3CON	TMR3CS<1:0>		T3CKPS<1:0>		T3SOSCEN	$\overline{\text{T3SYNC}}$	T3RD16	TMR3ON	166
T5GCON	TMR5GE	T5GPOL	T5GTM	T5GSPM	T5GGO/$\overline{\text{DONE}}$	T5GVAL	T5GSS<1:0>		167
TRISB	TRISB7	TRISB6	TRISB5	TRISB4	TRISB3	TRISB2	TRISB1	TRISB0	151
WPUB	WPUB7	WPUB6	WPUB5	WPUB4	WPUB3	WPUB2	WPUB1	WPUB0	152

Legend: — = unimplemented locations, read as '0'. Shaded bits are not used for PORTB.
Note 1: Available on PIC18(L)F4XK22 devices.

TABLE 10-7: CONFIGURATION REGISTERS ASSOCIATED WITH PORTB

Name	Bit 7	Bit 6	Bit 5	Bit 4	Bit 3	Bit 2	Bit 1	Bit 0	Register on Page
CONFIG3H	MCLRE	—	P2BMX	T3CMX	HFOFST	CCP3MX	PBADEN	CCP2MX	348
CONFIG4L	$\overline{\text{DEBUG}}$	XINST	—	—	—	LVP(1)	—	STRVEN	349

Legend: — = unimplemented locations, read as '0'. Shaded bits are not used for PORTB.
Note 1: Can only be changed when in high voltage programming mode.

© 2010-2016 Microchip Technology Inc.

10.4 PORTC Registers

PORTC is an 8-bit wide, bidirectional port. The corresponding data direction register is TRISC. Setting a TRISC bit (= 1) will make the corresponding PORTC pin an input (i.e., disable the output driver). Clearing a TRISC bit (= 0) will make the corresponding PORTC pin an output (i.e., enable the output driver and put the contents of the output latch on the selected pin).

The Data Latch register (LATC) is also memory mapped. Read-modify-write operations on the LATC register read and write the latched output value for PORTC.

PORTC is multiplexed with several peripheral functions (Table 10-8). The pins have Schmitt Trigger input buffers.

Some of these pin functions can be relocated to alternate pins using the Control fuse bits in CONFIG3H. RC0 is the default pin for T3CKI. Clearing the T3CMX bit moves the pin function to RB5. RC1 is the default pin for the CCP2 peripheral pin. Clearing the CCP2MX bit moves the pin function to the RB3 pin.

Two other pin functions, P2B and CCP3, can be relocated from their default pins to PORTC pins by clearing the control fuses in CONFIG3H. Clearing P2BMX and CCP3MX moves the pin functions to RC0 and RC6(1)/RE0(2), respectively.

When enabling peripheral functions, care should be taken in defining TRIS bits for each PORTC pin. The EUSART and MSSP peripherals override the TRIS bit to make a pin an output or an input, depending on the peripheral configuration. Refer to the corresponding peripheral section for additional information.

Note:	On a Power-on Reset, these pins are configured as analog inputs.

The contents of the TRISC register are affected by peripheral overrides. Reading TRISC always returns the current contents, even though a peripheral device may be overriding one or more of the pins.

EXAMPLE 10-3: INITIALIZING PORTC

```
MOVLB   0xF     ; Set BSR for banked SFRs
CLRF    PORTC   ; Initialize PORTC by
                ; clearing output
                ; data latches
CLRF    LATC    ; Alternate method
                ; to clear output
                ; data latches
MOVLW   0CFh    ; Value used to
                ; initialize data
                ; direction
MOVWF   TRISC   ; Set RC<3:0> as inputs
                ; RC<5:4> as outputs
                ; RC<7:6> as inputs
MOVLW   30h     ; Value used to
                ; enable digital inputs
MOVWF   ANSELC  ; RC<3:2> dig input enable
                ; No ANSEL bits for RC<1:0>
                ; RC<7:6> dig input enable
```

10.4.1 PORTC OUTPUT PRIORITY

Each PORTC pin is multiplexed with other functions. The pins, their combined functions and their output priorities are briefly described here. For additional information, refer to the appropriate section in this data sheet.

When multiple outputs are enabled, the actual pin control goes to the peripheral with the higher priority. Table 10-4 lists the PORTC pin functions from the highest to the lowest priority.

Analog input functions, such as ADC, comparator and SR latch inputs, are not shown in the priority lists.

These inputs are active when the I/O pin is set for Analog mode using the ANSELx registers. Digital output functions may control the pin when it is in Analog mode with the priority shown below.

TABLE 10-8: PORTC I/O SUMMARY

Pin Name	Function	TRIS Setting	ANSEL setting	Pin Type	Buffer Type	Description
RC0/P2B/T3CKI/T3G/ T1CKI/SOSCO	RC0	0	—	O	DIG	LATC<0> data output; not affected by analog input.
		1	—	I	ST	PORTC<0> data input; disabled when analog input enabled.
	P2B(2)	0	—	O	DIG	Enhanced CCP2 PWM output 2.
	T3CKI(1)	1	—	I	ST	Timer3 clock input.
	T3G	1	—	I	ST	Timer3 external clock gate input.
	T1CKI	1	—	I	ST	Timer1 clock input.
	SOSCO	x	—	O	XTAL	Secondary oscillator output.
RC1/P2A/CCP2/SOSCI	RC1	0	—	O	DIG	LATC<1> data output; not affected by analog input.
		1	—	I	ST	PORTC<1> data input; disabled when analog input enabled.
	P2A	0	—	O	DIG	Enhanced CCP2 PWM output 1.
	CCP2(1)	0	—	O	DIG	Compare 2 output/PWM 2 output.
		1	—	I	ST	Capture 2 input.
	SOSCI	x	—	I	XTAL	Secondary oscillator input.
RC2/CTPLS/P1A/ CCP1/T5CKI/AN14	RC2	0	0	O	DIG	LATC<2> data output; not affected by analog input.
		1	0	I	ST	PORTC<2> data input; disabled when analog input enabled.
	CTPLS	0	0	O	DIG	CTMU pulse generator output.
	P1A	0	0	O	DIG	Enhanced CCP1 PWM output 1.
	CCP1	0	0	O	DIG	Compare 1 output/PWM 1 output.
		1	0	I	ST	Capture 1 input.
	T5CKI	1	0	I	ST	Timer5 clock input.
	AN14	1	1	I	AN	Analog input 14.
RC3/SCK1/SCL1/AN15	RC3	0	0	O	DIG	LATC<3> data output; not affected by analog input.
		1	0	I	ST	PORTC<3> data input; disabled when analog input enabled.
	SCK1	0	0	O	DIG	MSSP1 SPI Clock output.
		1	0	I	ST	MSSP1 SPI Clock input.
	SCL1	0	0	O	DIG	MSSP1 I^2C Clock output.
		1	0	I	I^2C	MSSP1 I^2C Clock input.
	AN15	1	1	I	AN	Analog input 15.
RC4/SDI1/SDA1/AN16	RC4	0	0	O	DIG	LATC<4> data output; not affected by analog input.
		1	0	I	ST	PORTC<4> data input; disabled when analog input enabled.
	SDI1	1	0	I	ST	MSSP1 SPI data input.
	SDA1	0	0	O	DIG	MSSP1 I^2C data output.
		1	0	I	I^2C	MSSP1 I^2C data input.
	AN16	1	1	I	AN	Analog input 16.

Legend: AN = Analog input or output; TTL = TTL compatible input; HV = High Voltage; OD = Open Drain; XTAL = Crystal; CMOS = CMOS compatible input or output; ST = Schmitt Trigger input with CMOS levels; I^2C = Schmitt Trigger input with I^2C.

Note 1: Default pin assignment for P2B, T3CKI, CCP3 and CCP2 when Configuration bits PB2MX, T3CMX, CCP3MX and CCP2MX are set.

2: Alternate pin assignment for P2B, T3CKI, CCP3 and CCP2 when Configuration bits PB2MX, T3CMX, CCP3MX and CCP2MX are clear.

3: Function on PORTD and PORTE for PIC18(L)F4XK22 devices.

© 2010-2016 Microchip Technology Inc.

TABLE 10-8: PORTC I/O SUMMARY (CONTINUED)

Pin Name	Function	TRIS Setting	ANSEL setting	Pin Type	Buffer Type	Description
RC5/SDO1/AN17	RC5	0	0	O	DIG	LATC<5> data output; not affected by analog input.
		1	0	I	ST	PORTC<5> data input; disabled when analog input enabled.
	SDO1	0	0	O	DIG	MSSP1 SPI data output.
	AN17	1	1	I	AN	Analog input 17.
RC6/P3A/CCP3/TX1/CK1/AN18	RC6	0	0	O	DIG	LATC<6> data output; not affected by analog input.
		1	0	I	ST	PORTC<6> data input; disabled when analog input enabled.
	P3A(2), (3)	0	0	O	CMOS	Enhanced CCP3 PWM output 1.
	CCP3(2), (3)	0	0	O	DIG	Compare 3 output/PWM 3 output.
		1	0	I	ST	Capture 3 input.
	TX1	1	0	O	DIG	EUSART asynchronous transmit data output.
	CK1	1	0	O	DIG	EUSART synchronous serial clock output.
		1	0	I	ST	EUSART synchronous serial clock input.
	AN18	1	1	I	AN	Analog input 18.
RC7/P3B/RX1/DT1/AN19	RC7	0	0	O	DIG	LATC<7> data output; not affected by analog input.
		1	0	I	ST	PORTC<7> data input; disabled when analog input enabled.
	P3B	0	0	O	CMOS	Enhanced CCP3 PWM output 2.
	RX1	1	0	I	ST	EUSART asynchronous receive data in.
	DT1	1	0	O	DIG	EUSART synchronous serial data output.
		1	0	I	ST	EUSART synchronous serial data input.
	AN19	1	1	I	AN	Analog input 19.

Legend: AN = Analog input or output; TTL = TTL compatible input; HV = High Voltage; OD = Open Drain; XTAL = Crystal; CMOS = CMOS compatible input or output; ST = Schmitt Trigger input with CMOS levels; I^2C = Schmitt Trigger input with I^2C.

Note 1: Default pin assignment for P2B, T3CKI, CCP3 and CCP2 when Configuration bits PB2MX, T3CMX, CCP3MX and CCP2MX are set.

2: Alternate pin assignment for P2B, T3CKI, CCP3 and CCP2 when Configuration bits PB2MX, T3CMX, CCP3MX and CCP2MX are clear.

3: Function on PORTD and PORTE for PIC18FXXK22 devices.

TABLE 10-9: REGISTERS ASSOCIATED WITH PORTC

Name	Bit 7	Bit 6	Bit 5	Bit 4	Bit 3	Bit 2	Bit 1	Bit 0	Register on Page
ANSELC	ANSC7	ANSC6	ANSC5	ANSC4	ANSC3	ANSC2	—	—	150
ECCP1AS	CCP1ASE	CCP1AS<2:0>			PSS1AC<1:0>		PSS1BD<1:0>		202
CCP1CON	P1M<1:0>		DC1B<1:0>		CCP1M<3:0>				198
ECCP2AS	CCP2ASE	CCP2AS<2:0>			PSS2AC<1:0>		PSS2BD<1:0>		202
CCP2CON	P2M<1:0>		DC2B<1:0>		CCP2M<3:0>				198
CTMUCONH	CTMUEN	—	CTMUSIDL	TGEN	EDGEN	EDGSEQEN	IDISSEN	CTTRIG	323
LATC	LATC7	LATC6	LATC5	LATC4	LATC3	LATC2	LATC1	LATC0	152
PORTC	RC7	RC6	RC5	RC4	RC3	RC2	RC1	RC0	148
RCSTA1	SPEN	RX9	SREN	CREN	ADDEN	FERR	OERR	RX9D	270
SLRCON	—	—	—	SLRE(1)	SLRD(1)	SLRC	SLRB	SLRA	153
SSP1CON1	WCOL	SSPOV	SSPEN	CKP	SSPM<3:0>				253
T1CON	TMR1CS<1:0>		T1CKPS<1:0>		T1SOSCEN	$\overline{\text{T1SYNC}}$	T1RD16	TMR1ON	166
T3CON	TMR3CS<1:0>		T3CKPS<1:0>		T3SOSCEN	$\overline{\text{T3SYNC}}$	T3RD16	TMR3ON	166
T3GCON	TMR3GE	T3GPOL	T3GTM	T3GSPM	T3GGO/$\overline{\text{DONE}}$	T3GVAL	T3GSS<1:0>		167
T5CON	TMR5CS<1:0>		T5CKPS<1:0>		T5SOSCEN	$\overline{\text{T5SYNC}}$	T5RD16	TMR5ON	166
TRISC	TRISC7	TRISC6	TRISC5	TRISC4	TRISC3	TRISC2	TRISC1	TRISC0	151
TXSTA1	CSRC	TX9	TXEN	SYNC	SENDB	BRGH	TRMT	TX9D	269

Legend: — = unimplemented locations, read as '0'. Shaded bits are not used for PORTC.

Note 1: Available on PIC18(L)F4XK22 devices.

TABLE 10-10: CONFIGURATION REGISTERS ASSOCIATED WITH PORTC

Name	Bit 7	Bit 6	Bit 5	Bit 4	Bit 3	Bit 2	Bit 1	Bit 0	Register on Page
CONFIG3H	MCLRE	—	P2BMX	T3CMX	HFOFST	CCP3MX	PBADEN	CCP2MX	348

Legend: — = unimplemented locations, read as '0'. Shaded bits are not used for PORTC.

© 2010-2016 Microchip Technology Inc.

10.5 PORTD Registers

Note: PORTD is only available on 40-pin and 44-pin devices.

PORTD is an 8-bit wide, bidirectional port. The corresponding data direction register is TRISD. Setting a TRISD bit (= 1) will make the corresponding PORTD pin an input (i.e., disable the output driver). Clearing a TRISD bit (= 0) will make the corresponding PORTD pin an output (i.e., enable the output driver and put the contents of the output latch on the selected pin).

The Data Latch register (LATD) is also memory mapped. Read-modify-write operations on the LATD register read and write the latched output value for PORTD.

All pins on PORTD are implemented with Schmitt Trigger input buffers. Each pin is individually configurable as an input or output.

All of the PORTD pins are multiplexed with analog and digital peripheral modules. See Table 10-11.

Note: On a Power-on Reset, these pins are configured as analog inputs.

EXAMPLE 10-4: INITIALIZING PORTD

```
MOVLB   0xF     ; Set BSR for banked SFRs
CLRF    PORTD   ; Initialize PORTD by
                ; clearing output
                ; data latches
CLRF    LATD    ; Alternate method
                ; to clear output
                ; data latches
MOVLW   0CFh    ; Value used to
                ; initialize data
                ; direction
MOVWF   TRISD   ; Set RD<3:0> as inputs
                ; RD<5:4> as outputs
                ; RD<7:6> as inputs
MOVLW   30h     ; Value used to
                ; enable digital inputs
MOVWF   ANSELD  ; RD<3:0> dig input enable
                ; RC<7:6> dig input enable
```

10.5.1 PORTD OUTPUT PRIORITY

Each PORTD pin is multiplexed with other functions. The pins, their combined functions and their output priorities are briefly described here. For additional information, refer to the appropriate section in this data sheet.

When multiple outputs are enabled, the actual pin control goes to the peripheral with the higher priority. Table 10-4 lists the PORTD pin functions from the highest to the lowest priority.

Analog input functions, such as ADC, comparator and SR latch inputs, are not shown in the priority lists.

These inputs are active when the I/O pin is set for Analog mode using the ANSELx registers. Digital output functions may control the pin when it is in Analog mode with the priority shown below.

TABLE 10-11: PORTD I/O SUMMARY

Pin Name	Function	TRIS Setting	ANSEL setting	Pin Type	Buffer Type	Description
RD0/SCK2/SCL2/AN20	RD0	0	0	O	DIG	LATD<0> data output; not affected by analog input.
		1	0	I	ST	PORTD<0> data input; disabled when analog input enabled.
	SCK2	0	0	O	DIG	MSSP2 SPI Clock output.
		1	0	I	ST	MSSP2 SPI Clock input.
	SCL2	0	0	O	DIG	MSSP2 I^2C Clock output.
		1	0	I	I^2C	MSSP2 I^2C Clock input.
	AN20	1	1	I	AN	Analog input 20.
RD1/CCP4/SDI2/SDA2/AN21	RD1	0	0	O	DIG	LATD<1> data output; not affected by analog input.
		1	0	I	ST	PORTD<1> data input; disabled when analog input enabled.
	CCP4	0	0	O	DIG	Compare 4 output/PWM 4 output.
		1	0	I	ST	Capture 4 input.
	SDI2	1	0	I	ST	MSSP2 SPI data input.
	SDA2	0	0	O	DIG	MSSP2 I^2C data output.
		1	0	I	I^2C	MSSP2 I^2C data input.
	AN21	1	1	I	AN	Analog input 21.
RD2/P2B/AN22	RD2	0	0	O	DIG	LATD<2> data output; not affected by analog input.
		1	0	I	ST	PORTD<2> data input; disabled when analog input enabled.
	P2B(1)	0	0	O	DIG	Enhanced CCP2 PWM output 2.
	AN22	1	1	I	AN	Analog input 22.
RD3/P2C/$\overline{SS2}$/AN23	RD3	0	0	O	DIG	LATD<3> data output; not affected by analog input.
		1	0	I	ST	PORTD<3> data input; disabled when analog input enabled.
	P2C	0	0	O	DIG	Enhanced CCP2 PWM output 4.
	$\overline{SS2}$	1	0	I	TTL	MSSP2 SPI slave select input.
	AN23	1	1	I	AN	Analog input 23.
RD4/P2D/SDO2/AN24	RD4	0	0	O	DIG	LATD<4> data output; not affected by analog input.
		1	0	I	ST	PORTD<4> data input; disabled when analog input enabled.
	P2D	0	0	O	DIG	Enhanced CCP2 PWM output 3.
	SDO2	0	0	O	DIG	MSSP2 SPI data output.
	AN24	1	1	I	AN	Analog input 24.
RD5/P1B/AN25	RD5	0	0	O	DIG	LATD<5> data output; not affected by analog input.
		1	0	I	ST	PORTD<5> data input; disabled when analog input enabled.
	P1B	0	0	O	DIG	Enhanced CCP1 PWM output 2.
	AN25	1	1	I	AN	Analog input 25.

Legend: AN = Analog input or output; TTL = TTL compatible input; HV = High Voltage; OD = Open Drain; XTAL = Crystal; CMOS = CMOS compatible input or output; ST = Schmitt Trigger input with CMOS levels; I^2C = Schmitt Trigger input with I^2C.

Note 1: Default pin assignment for P2B, T3CKI, CCP3 and CCP2 when Configuration bits PB2MX, T3CMX, CCP3MX and CCP2MX are set.

© 2010-2016 Microchip Technology Inc.

TABLE 10-11: PORTD I/O SUMMARY (CONTINUED)

Pin Name	Function	TRIS Setting	ANSEL setting	Pin Type	Buffer Type	Description
RD6/P1C/TX2/CK2/ AN26	RD6	0	0	O	DIG	LATD<6> data output; not affected by analog input.
		1	0	I	ST	PORTD<6> data input; disabled when analog input enabled.
	P1C	0	0	O	DIG	Enhanced CCP1 PWM output 3.
	TX2	1	0	O	DIG	EUSART asynchronous transmit data output.
	CK2	1	0	O	DIG	EUSART synchronous serial clock output.
		1	0	I	ST	EUSART synchronous serial clock input.
	AN26	1	1	I	AN	Analog input 26.
RD7/P1D/RX2/DT2/ AN27	RD7	0	0	O	DIG	LATD<7> data output; not affected by analog input.
		1	0	I	ST	PORTD<7> data input; disabled when analog input enabled.
	P1D	0	0	O	DIG	Enhanced CCP1 PWM output 4.
	RX2	1	0	I	ST	EUSART asynchronous receive data in.
	DT2	1	0	O	DIG	EUSART synchronous serial data output.
		1	0	I	ST	EUSART synchronous serial data input.
	AN27	1	1	I	AN	Analog input 27.

Legend: AN = Analog input or output; TTL = TTL compatible input; HV = High Voltage; OD = Open Drain; XTAL = Crystal; CMOS = CMOS compatible input or output; ST = Schmitt Trigger input with CMOS levels; I^2C = Schmitt Trigger input with I^2C.

Note 1: Default pin assignment for P2B, T3CKI, CCP3 and CCP2 when Configuration bits PB2MX, T3CMX, CCP3MX and CCP2MX are set.

TABLE 10-12: REGISTERS ASSOCIATED WITH PORTD

Name	Bit 7	Bit 6	Bit 5	Bit 4	Bit 3	Bit 2	Bit 1	Bit 0	Register on Page
ANSELD(1)	ANSD7	ANSD6	ANSD5	ANSD4	ANSD3	ANSD2	ANSD1	ANSD0	150
BAUDCON2	ABDOVF	RCIDL	DTRXP	CKTXP	BRG16	—	WUE	ABDEN	271
CCP1CON	P1M<1:0>		DC1B<1:0>		CCP1M<3:0>				198
CCP2CON	P2M<1:0>		DC2B<1:0>		CCP2M<3:0>				198
CCP4CON	—	—	DC4B<1:0>		CCP4M<3:0>				198
LATD(1)	LATD7	LATD6	LATD5	LATD4	LATD3	LATD2	LATD1	LATD0	152
PORTD(1)	RD7	RD6	RD5	RD4	RD3	RD2	RD1	RD0	148
RCSTA2	SPEN	RX9	SREN	CREN	ADDEN	FERR	OERR	RX9D	270
SLRCON(1)	—	—	—	SLRE	SLRD	SLRC	SLRB	SLRA	153
SSP2CON1	WCOL	SSPOV	SSPEN	CKP	SSPM<3:0>				253
TRISD(1)	TRISD7	TRISD6	TRISD5	TRISD4	TRISD3	TRISD2	TRISD1	TRISD0	151

Legend: — = unimplemented locations, read as ‘0’. Shaded bits are not used for PORTD.

Note 1: Available on PIC18(L)F4XK22 devices.

TABLE 10-13: CONFIGURATION REGISTERS ASSOCIATED WITH PORTD

Name	Bit 7	Bit 6	Bit 5	Bit 4	Bit 3	Bit 2	Bit 1	Bit 0	Register on Page
CONFIG3H	MCLRE	—	P2BMX	T3CMX	HFOFST	CCP3MX	PBADEN	CCP2MX	348

Legend: — = unimplemented locations, read as ‘0’. Shaded bits are not used for PORTD.

© 2010-2016 Microchip Technology Inc.

10.6 PORTE Registers

Depending on the particular PIC18(L)F2X/4XK22 device selected, PORTE is implemented in two different ways.

10.6.1 PORTE ON 40/44-PIN DEVICES

For PIC18(L)F2X/4XK22 devices, PORTE is a 4-bit wide port. Three pins (RE0/P3A/CCP3/AN5, RE1/P3B/AN6 and RE2/CCP5/AN7) are individually configurable as inputs or outputs. These pins have Schmitt Trigger input buffers. When selected as an analog input, these pins will read as '0's.

The corresponding data direction register is TRISE. Setting a TRISE bit (= 1) will make the corresponding PORTE pin an input (i.e., disable the output driver). Clearing a TRISE bit (= 0) will make the corresponding PORTE pin an output (i.e., enable the output driver and put the contents of the output latch on the selected pin).

TRISE controls the direction of the REx pins, even when they are being used as analog inputs. The user must make sure to keep the pins configured as inputs when using them as analog inputs.

The Data Latch register (LATE) is also memory mapped. Read-modify-write operations on the LATE register read and write the latched output value for PORTE.

Note:	On a Power-on Reset, RE<2:0> are configured as analog inputs.

The fourth pin of PORTE ($\overline{\text{MCLR}}$/VPP/RE3) is an input only pin. Its operation is controlled by the MCLRE Configuration bit. When selected as a port pin (MCLRE = 0), it functions as a digital input only pin; as such, it does not have TRIS or LAT bits associated with its operation. Otherwise, it functions as the device's Master Clear input. In either configuration, RE3 also functions as the programming voltage input during programming.

Note:	On a Power-on Reset, RE3 is enabled as a digital input only if Master Clear functionality is disabled.

EXAMPLE 10-5: INITIALIZING PORTE

```
CLRF    PORTE   ; Initialize PORTE by
                ; clearing output
                ; data latches
CLRF    LATE    ; Alternate method
                ; to clear output
                ; data latches
CLRF    ANSELE  ; Configure analog pins
                ; for digital only
MOVLW   05h     ; Value used to
                ; initialize data
                ; direction
MOVWF   TRISE   ; Set RE<0> as input
                ; RE<1> as output
                ; RE<2> as input
```

10.6.2 PORTE ON 28-PIN DEVICES

For PIC18F2XK22 devices, PORTE is only available when Master Clear functionality is disabled (MCLR = 0). In these cases, PORTE is a single bit, input only port comprised of RE3 only. The pin operates as previously described.

10.6.3 RE3 WEAK PULL-UP

The port RE3 pin has an individually controlled weak internal pull-up. When set, the WPUE3 (TRISE<7>) bit enables the RE3 pin pull-up. The $\overline{\text{RBPU}}$ bit of the INTCON2 register controls pull-ups on both PORTB and PORTE. When $\overline{\text{RBPU}}$ = 0, the weak pull-ups become active on all pins which have the WPUE3 or WPUBx bits set. When set, the RBPU bit disables all weak pull-ups. The pull-ups are disabled on a Power-on Reset. When the RE3 port pin is configured as $\overline{\text{MCLR}}$, (CONFIG3H<7>, MCLRE=1 and CONFIG4L<2>, LVP=0), or configured for Low Voltage Programming, (MCLRE=x and LVP=1), the pull-up is always enabled and the WPUE3 bit has no effect.

10.6.4 PORTE OUTPUT PRIORITY

Each PORTE pin is multiplexed with other functions. The pins, their combined functions and their output priorities are briefly described here. For additional information, refer to the appropriate section in this data sheet.

When multiple outputs are enabled, the actual pin control goes to the peripheral with the higher priority. Table 10-4 lists the PORTE pin functions from the highest to the lowest priority.

Analog input functions, such as ADC, comparator and SR latch inputs, are not shown in the priority lists.

These inputs are active when the I/O pin is set for Analog mode using the ANSELx registers. Digital output functions may control the pin when it is in Analog mode with the priority shown below.

TABLE 10-14: PORTE I/O SUMMARY

Pin	Function	TRIS Setting	ANSEL Setting	Pin Type	Buffer Type	Description
RE0/P3A/CCP3/AN5	RE0	0	0	O	DIG	LATE<0> data output; not affected by analog input.
		1	0	I	ST	PORTE<0> data input; disabled when analog input enabled.
	P3A(1)	0	0	O	DIG	Enhanced CCP3 PWM output.
	CCP3(1)	0	0	O	DIG	Compare 3 output/PWM 3 output.
		1	0	I	ST	Capture 3 input.
	AN5	1	1	I	AN	Analog input 5.
RE1/P3B/AN6	RE1	0	0	O	DIG	LATE<1> data output; not affected by analog input.
		1	0	I	ST	PORTE<1> data input; disabled when analog input enabled.
	P3B	0	0	O	DIG	Enhanced CCP3 PWM output.
	AN6	1	1	I	AN	Analog input 6.
RE2/CCP5/AN7	RE2	0	0	O	DIG	LATE<2> data output; not affected by analog input.
		1	0	I	ST	PORTE<2> data input; disabled when analog input enabled.
	CCP5	0	0	O	DIG	Compare 5 output/PWM 5 output.
		1	0	I	ST	Capture 5 input.
	AN7	1	1	I	AN	Analog input 7.
RE3/VPP/$\overline{\text{MCLR}}$	RE3	—	—	I	ST	PORTE<3> data input; enabled when Configuration bit MCLRE = 0.
	VPP	—	—	P	AN	Programming voltage input; always available
	$\overline{\text{MCLR}}$	—	—	I	ST	Active-low Master Clear (device Reset) input; enabled when configuration bit MCLRE = 1.

Legend: AN = Analog input or output; TTL = TTL compatible input; HV = High Voltage; OD = Open Drain; XTAL = Crystal; CMOS = CMOS compatible input or output; ST = Schmitt Trigger input with CMOS levels; I^2C = Schmitt Trigger input with I^2C.

Note 1: Alternate pin assignment for P3A/CCP3 when Configuration bit CCP3MX is clear.

© 2010-2016 Microchip Technology Inc.

TABLE 10-15: REGISTERS ASSOCIATED WITH PORTE

Name	Bit 7	Bit 6	Bit 5	Bit 4	Bit 3	Bit 2	Bit 1	Bit 0	Reset Values on page
ANSELE(1)	—	—	—	—	—	ANSE2	ANSE1	ANSE0	151
INTCON2	$\overline{\text{RBPU}}$	INTEDG0	INTEDG1	INTEDG2	—	TMR0IP	—	RBIP	110
LATE(1)	—	—	—	—	—	LATE2	LATE1	LATE0	152
PORTE	—	—	—	—	RE3	RE2(1)	RE1(1)	RE0(1)	149
SLRCON	—	—	—	SLRE(1)	SLRD(1)	SLRC	SLRB	SLRA	153
TRISE	WPUE3	—	—	—	—	TRISE2(1)	TRISE1(1)	TRISE0(1)	151

Legend: — = unimplemented locations, read as ‘0’. Shaded bits are not used for PORTE.

Note 1: Available on PIC18(L)F4XK22 devices.

TABLE 10-16: CONFIGURATION REGISTERS ASSOCIATED WITH PORTE

Name	Bit 7	Bit 6	Bit 5	Bit 4	Bit 3	Bit 2	Bit 1	Bit 0	Reset Values on page
CONFIG3H	MCLRE	—	P2BMX	T3CMX	HFOFST	CCP3MX	PBADEN	CCP2MX	348
CONFIG4L	$\overline{\text{DEBUG}}$	XINST	—	—	—	LVP(1)	—	STRVEN	349

Legend: — = unimplemented locations, read as ‘0’. Shaded bits are not used for Interrupts.

Note 1: Can only be changed when in high voltage programming mode.

10.7 Port Analog Control

Most port pins are multiplexed with analog functions such as the Analog-to-Digital Converter and comparators. When these I/O pins are to be used as analog inputs it is necessary to disable the digital input buffer to avoid excessive current caused by improper biasing of the digital input. Individual control of the digital input buffers on pins which share analog functions is provided by the ANSELA, ANSELB, ANSELC, ANSELD and ANSELE registers. Setting an ANSx bit high will disable the associated digital input buffer and cause all reads of that pin to return '0' while allowing analog functions of that pin to operate correctly.

The state of the ANSx bits has no affect on digital output functions. A pin with the associated TRISx bit clear and ANSx bit set will still operate as a digital output but the input mode will be analog. This can cause unexpected behavior when performing read-modify-write operations on the affected port.

All ANSEL register bits default to '1' upon POR and BOR, disabling digital inputs for their associated port pins. All TRIS register bits default to '1' upon POR or BOR, disabling digital outputs for their associated port pins. As a result, all port pins that have an ANSEL register will default to analog inputs upon POR or BOR.

10.8 Port Slew Rate Control

The output slew rate of each port is programmable to select either the standard transition rate or a reduced transition rate of approximately 0.1 times the standard to minimize EMI. The reduced transition time is the default slew rate for all ports.

10.9 Register Definitions – Port Control

REGISTER 10-1: PORTX(1): PORTx REGISTER

R/W-u/x	R/W-u/x	R/W-u/x	R/W-u/x	R/W-u/x	R/W-u/x	R/W-u/x	R/W-u/x
Rx7	Rx6	Rx5	Rx4	Rx3	Rx2	Rx1	Rx0
bit 7							bit 0

Legend:		
R = Readable bit	W = Writable bit	U = Unimplemented bit, read as '0'
'1' = Bit is set	'0' = Bit is cleared	x = Bit is unknown
-n/n = Value at POR and BOR/Value at all other Resets		

bit 7-0 **Rx<7:0>:** PORTx I/O bit values(2)

Note 1: Register Description for PORTA, PORTB, PORTC and PORTD.

2: Writes to PORTx are written to corresponding LATx register. Reads from PORTx register is return of I/O pin values.

© 2010-2016 Microchip Technology Inc.

REGISTER 10-2: PORTE: PORTE REGISTER

U-0	U-0	U-0	U-0	R/W-u/x	R/W-u/x	R/W-u/x	R/W-u/x
—	—	—	—	RE3(1)	RE2(2), (3)	RE1(2), (3)	RE0(2), (3)
bit 7							bit 0

Legend:		
R = Readable bit	W = Writable bit	U = Unimplemented bit, read as ‘0’
‘1’ = Bit is set	‘0’ = Bit is cleared	x = Bit is unknown
-n/n = Value at POR and BOR/Value at all other Resets		

bit 7-4 **Unimplemented:** Read as ‘0’

bit 3 **RE3:** PORTE Input bit value(1)

bit 2-0 **RE<2:0>:** PORTE I/O bit values(2), (3)

Note 1: Port is available as input only when MCLRE = 0.

2: Writes to PORTx are written to corresponding LATx register. Reads from PORTx register is return of I/O pin values.

3: Available on PIC18(L)F4XK22 devices.

REGISTER 10-3: ANSELA – PORTA ANALOG SELECT REGISTER

U-0	U-0	R/W-1	U-0	R/W-1	R/W-1	R/W-1	R/W-1
—	—	ANSA5	—	ANSA3	ANSA2	ANSA1	ANSA0
bit 7							bit 0

Legend:			
R = Readable bit	W = Writable bit	U = Unimplemented bit, read as ‘0’	
-n = Value at POR	‘1’ = Bit is set	‘0’ = Bit is cleared	x = Bit is unknown

bit 7-6 **Unimplemented:** Read as ‘0’

bit 5 **ANSA5:** RA5 Analog Select bit
1 = Digital input buffer disabled
0 = Digital input buffer enabled

bit 4 **Unimplemented:** Read as ‘0’

bit 3-0 **ANSA<3:0>:** RA<3:0> Analog Select bit
1 = Digital input buffer disabled
0 = Digital input buffer enabled

REGISTER 10-4: ANSELB – PORTB ANALOG SELECT REGISTER

U-0	U-0	R/W-1	R/W-1	R/W-1	R/W-1	R/W-1	R/W-1
—	—	ANSB5	ANSB4	ANSB3	ANSB2	ANSB1	ANSB0
bit 7							bit 0

Legend:			
R = Readable bit	W = Writable bit	U = Unimplemented bit, read as ‘0’	
-n = Value at POR	‘1’ = Bit is set	‘0’ = Bit is cleared	x = Bit is unknown

bit 7-6 **Unimplemented:** Read as ‘0’

bit 5-0 **ANSB<5:0>:** RB<5:0> Analog Select bit
1 = Digital input buffer disabled
0 = Digital input buffer enabled

REGISTER 10-5: ANSELC – PORTC ANALOG SELECT REGISTER

R/W-1	R/W-1	R/W-1	R/W-1	R/W-1	R/W-1	U-0	U-0
ANSC7	ANSC6	ANSC5	ANSC4	ANSC3	ANSC2	—	—
bit 7							bit 0

Legend:			
R = Readable bit	W = Writable bit	U = Unimplemented bit, read as ‘0’	
-n = Value at POR	‘1’ = Bit is set	‘0’ = Bit is cleared	x = Bit is unknown

bit 7-2 **ANSC<7:2>:** RC<7:2> Analog Select bit
1 = Digital input buffer disabled
0 = Digital input buffer enabled

bit 1-0 **Unimplemented:** Read as ‘0’

REGISTER 10-6: ANSELD – PORTD ANALOG SELECT REGISTER

R/W-1	R/W-1	R/W-1	R/W-1	R/W-1	R/W-1	R/W-1	R/W-1
ANSD7	ANSD6	ANSD5	ANSD4	ANSD3	ANSD2	ANSD1	ANSD0
bit 7							bit 0

Legend:			
R = Readable bit	W = Writable bit	U = Unimplemented bit, read as ‘0’	
-n = Value at POR	‘1’ = Bit is set	‘0’ = Bit is cleared	x = Bit is unknown

bit 7-0 **ANSD<7:0>:** RD<7:0> Analog Select bit
1 = Digital input buffer disabled
0 = Digital input buffer enabled

© 2010-2016 Microchip Technology Inc.

REGISTER 10-7: ANSELE – PORTE ANALOG SELECT REGISTER

U-0	U-0	U-0	U-0	U-0	R/W-1	R/W-1	R/W-1
—	—	—	—	—	ANSE2(1)	ANSE1(1)	ANSE0(1)
bit 7							bit 0

Legend:			
R = Readable bit	W = Writable bit	U = Unimplemented bit, read as ‘0’	
-n = Value at POR	‘1’ = Bit is set	‘0’ = Bit is cleared	x = Bit is unknown

bit 7-3 **Unimplemented:** Read as ‘0’

bit 2-0 **ANSE<2:0>:** RE<2:0> Analog Select bit(1)
1 = Digital input buffer disabled
0 = Digital input buffer enabled

Note 1: Available on PIC18(L)F4XK22 devices only.

REGISTER 10-8: TRISx: PORTx TRI-STATE REGISTER(1)

R/W-1	R/W-1	R/W-1	R/W-1	R/W-1	R/W-1	R/W-1	R/W-1
TRISx7	TRISx6	TRISx5	TRISx4	TRISx3	TRISx2	TRISx1	TRISx0
bit 7							bit 0

Legend:			
R = Readable bit	W = Writable bit	U = Unimplemented bit, read as ‘0’	
-n = Value at POR	‘1’ = Bit is set	‘0’ = Bit is cleared	x = Bit is unknown

bit 7-0 **TRISx<7:0>:** PORTx Tri-State Control bit
1 = PORTx pin configured as an input (tri-stated)
0 = PORTx pin configured as an output

Note 1: Register description for TRISA, TRISB, TRISC and TRISD.

REGISTER 10-9: TRISE: PORTE TRI-STATE REGISTER

R/W-1	U-0	U-0	U-0	U-0	R/W-1	R/W-1	R/W-1
WPUE3	—	—	—	—	TRISE2(1)	TRISE1(1)	TRISE0(1)
bit 7							bit 0

Legend:			
R = Readable bit	W = Writable bit	U = Unimplemented bit, read as ‘0’	
-n = Value at POR	‘1’ = Bit is set	‘0’ = Bit is cleared	x = Bit is unknown

bit 7 **WPUE3:** Weak Pull-up Register bits
1 = Pull-up enabled on PORT pin
0 = Pull-up disabled on PORT pin

bit 6-3 **Unimplemented:** Read as ‘0’

bit 2-0 **TRISE<7:0>:** PORTE Tri-State Control bit(1)
1 = PORTE pin configured as an input (tri-stated)
0 = PORTE pin configured as an output

Note 1: Available on PIC18(L)F4XK22 devices only.

REGISTER 10-10: LATx: PORTx OUTPUT LATCH REGISTER(1)

R/W-x/u	R/W-x/u	R/W-x/u	R/W-x/u	R/W-x/u	R/W-x/u	R/W-x/u	R/W-x/u
LATx7	LATx6	LATx5	LATx4	LATx3	LATx2	LATx1	LATx0
bit 7							bit 0

Legend:			
R = Readable bit	W = Writable bit	U = Unimplemented bit, read as ‘0’	
-n = Value at POR	‘1’ = Bit is set	‘0’ = Bit is cleared	x = Bit is unknown

bit 7-0 **LATx<7:0>:** PORTx Output Latch bit value(2)

Note 1: Register Description for LATA, LATB, LATC and LATD.

2: Writes to PORTx are written to corresponding LATx register. Reads from PORTx register is return of I/O pin values.

REGISTER 10-11: LATE: PORTE OUTPUT LATCH REGISTER(1)

U-0	U-0	U-0	U-0	U-0	R/W-x/u	R/W-x/u	R/W-x/u
—	—	—	—	—	LATE2	LATE1	LATE0
bit 7							bit 0

Legend:			
R = Readable bit	W = Writable bit	U = Unimplemented bit, read as ‘0’	
-n = Value at POR	‘1’ = Bit is set	‘0’ = Bit is cleared	x = Bit is unknown

bit 7-3 **Unimplemented:** Read as ‘0’

bit 2-0 **LATE<2:0>:** PORTE Output Latch bit value(2)

Note 1: Available on PIC18(L)F4XK22 devices only.

2: Writes to PORTE are written to corresponding LATE register. Reads from PORTE register is return of I/O pin values.

REGISTER 10-12: WPUB: WEAK PULL-UP PORTB REGISTER

R/W-1	R/W-1	R/W-1	R/W-1	R/W-1	R/W-1	R/W-1	R/W-1
WPUB7	WPUB6	WPUB5	WPUB4	WPUB3	WPUB2	WPUB1	WPUB0
bit 7							bit 0

Legend:			
R = Readable bit	W = Writable bit	U = Unimplemented bit, read as ‘0’	
-n = Value at POR	‘1’ = Bit is set	‘0’ = Bit is cleared	x = Bit is unknown

bit 7-0 **WPUB<7:0>:** Weak Pull-up Register bits

1 = Pull-up enabled on PORT pin
0 = Pull-up disabled on PORT pin

© 2010-2016 Microchip Technology Inc.

REGISTER 10-13: IOCB: INTERRUPT-ON-CHANGE PORTB CONTROL REGISTER

R/W-1	R/W-1	R/W-1	R/W-1	U-0	U-0	U-0	U-0
IOCB7	IOCB6	IOCB5	IOCB4	—	—	—	—
bit 7							bit 0

Legend:			
R = Readable bit	W = Writable bit	U = Unimplemented bit, read as ‘0’	
-n = Value at POR	‘1’ = Bit is set	‘0’ = Bit is cleared	x = Bit is unknown

bit 7-4 **IOCB<7:4>:** Interrupt-on-Change PORTB control bits
1 = Interrupt-on-change enabled(1)
0 = Interrupt-on-change disabled

Note 1: Interrupt-on-change requires that the RBIE bit (INTCON<3>) is set.

REGISTER 10-14: SLRCON: SLEW RATE CONTROL REGISTER

U-0	U-0	U-0	R/W-1	R/W-1	R/W-1	R/W-1	R/W-1
—	—	—	SLRE(1)	SLRD(1)	SLRC	SLRB	SLRA
bit 7							bit 0

Legend:			
R = Readable bit	W = Writable bit	U = Unimplemented bit, read as ‘0’	
-n = Value at POR	‘1’ = Bit is set	‘0’ = Bit is cleared	x = Bit is unknown

bit 7-5 **Unimplemented:** Read as ‘0’

bit 4 **SLRE:** PORTE Slew Rate Control bit(1)
1 = All outputs on PORTE slew at a limited rate
0 = All outputs on PORTE slew at the standard rate

bit 3 **SLRD:** PORTD Slew Rate Control bit(1)
1 = All outputs on PORTD slew at a limited rate
0 = All outputs on PORTD slew at the standard rate

bit 2 **SLRC:** PORTC Slew Rate Control bit
1 = All outputs on PORTC slew at a limited rate
0 = All outputs on PORTC slew at the standard rate

bit 1 **SLRB:** PORTB Slew Rate Control bit
1 = All outputs on PORTB slew at a limited rate
0 = All outputs on PORTB slew at the standard rate

bit 0 **SLRA:** PORTA Slew Rate Control bit
1 = All outputs on PORTA slew at a limited rate(2)
0 = All outputs on PORTA slew at the standard rate

Note 1: These bits are available on PIC18(L)F4XK22 devices.
2: The slew rate of RA6 defaults to standard rate when the pin is used as CLKOUT.

11.0 TIMER0 MODULE

The Timer0 module incorporates the following features:

- Software selectable operation as a timer or counter in both 8-bit or 16-bit modes
- Readable and writable registers
- Dedicated 8-bit, software programmable prescaler
- Selectable clock source (internal or external)
- Edge select for external clock
- Interrupt-on-overflow

The T0CON register (Register 11-1) controls all aspects of the module's operation, including the prescale selection. It is both readable and writable.

A simplified block diagram of the Timer0 module in 8-bit mode is shown in Figure 11-1. Figure 11-2 shows a simplified block diagram of the Timer0 module in 16-bit mode.

11.1 Register Definitions: Timer0 Control

REGISTER 11-1: T0CON: TIMER0 CONTROL REGISTER

R/W-1	R/W-1	R/W-1	R/W-1	R/W-1	R/W-1	R/W-1	R/W-1
TMR0ON	T08BIT	T0CS	T0SE	PSA	TOPS<2:0>		
bit 7							bit 0

Legend:			
R = Readable bit	W = Writable bit	U = Unimplemented bit, read as '0'	
-n = Value at POR	'1' = Bit is set	'0' = Bit is cleared	x = Bit is unknown

bit 7 **TMR0ON:** Timer0 On/Off Control bit
`1` = Enables Timer0
`0` = Stops Timer0

bit 6 **T08BIT**: Timer0 8-bit/16-bit Control bit
`1` = Timer0 is configured as an 8-bit timer/counter
`0` = Timer0 is configured as a 16-bit timer/counter

bit 5 **T0CS**: Timer0 Clock Source Select bit
`1` = Transition on T0CKI pin
`0` = Internal instruction cycle clock (CLKOUT)

bit 4 **T0SE**: Timer0 Source Edge Select bit
`1` = Increment on high-to-low transition on T0CKI pin
`0` = Increment on low-to-high transition on T0CKI pin

bit 3 **PSA**: Timer0 Prescaler Assignment bit
`1` = TImer0 prescaler is NOT assigned. Timer0 clock input bypasses prescaler.
`0` = Timer0 prescaler is assigned. Timer0 clock input comes from prescaler output.

bit 2-0 **T0PS<2:0>**: Timer0 Prescaler Select bits
`111` = 1:256 prescale value
`110` = 1:128 prescale value
`101` = 1:64 prescale value
`100` = 1:32 prescale value
`011` = 1:16 prescale value
`010` = 1:8 prescale value
`001` = 1:4 prescale value
`000` = 1:2 prescale value

© 2010-2016 Microchip Technology Inc.

11.2 Timer0 Operation

Timer0 can operate as either a timer or a counter; the mode is selected with the T0CS bit of the T0CON register. In Timer mode (T0CS = 0), the module increments on every clock by default unless a different prescaler value is selected (see **Section 11.4 "Prescaler"**). Timer0 incrementing is inhibited for two instruction cycles following a TMR0 register write. The user can work around this by adjusting the value written to the TMR0 register to compensate for the anticipated missing increments.

The Counter mode is selected by setting the T0CS bit (= 1). In this mode, Timer0 increments either on every rising or falling edge of pin RA4/T0CKI. The incrementing edge is determined by the Timer0 Source Edge Select bit, T0SE of the T0CON register; clearing this bit selects the rising edge. Restrictions on the external clock input are discussed below.

An external clock source can be used to drive Timer0; however, it must meet certain requirements (see Table 27-12) to ensure that the external clock can be synchronized with the internal phase clock (TOSC). There is a delay between synchronization and the onset of incrementing the timer/counter.

11.3 Timer0 Reads and Writes in 16-Bit Mode

TMR0H is not the actual high byte of Timer0 in 16-bit mode; it is actually a buffered version of the real high byte of Timer0 which is neither directly readable nor writable (refer to Figure 11-2). TMR0H is updated with the contents of the high byte of Timer0 during a read of TMR0L. This provides the ability to read all 16 bits of Timer0 without the need to verify that the read of the high and low byte were valid. Invalid reads could otherwise occur due to a rollover between successive reads of the high and low byte.

Similarly, a write to the high byte of Timer0 must also take place through the TMR0H Buffer register. Writing to TMR0H does not directly affect Timer0. Instead, the high byte of Timer0 is updated with the contents of TMR0H when a write occurs to TMR0L. This allows all 16 bits of Timer0 to be updated at once.

FIGURE 11-1: TIMER0 BLOCK DIAGRAM (8-BIT MODE)

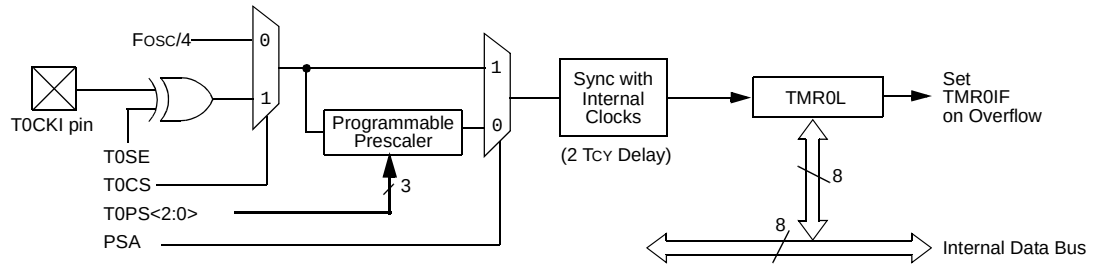

Note: Upon Reset, Timer0 is enabled in 8-bit mode with clock input from T0CKI max. prescale.

FIGURE 11-2: TIMER0 BLOCK DIAGRAM (16-BIT MODE)

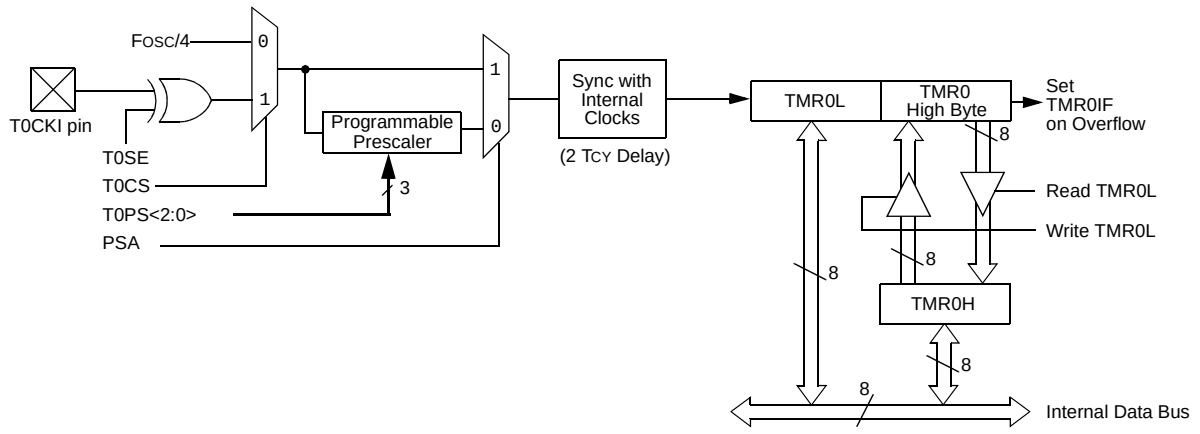

Note: Upon Reset, Timer0 is enabled in 8-bit mode with clock input from T0CKI max. prescale.

11.4 Prescaler

An 8-bit counter is available as a prescaler for the Timer0 module. The prescaler is not directly readable or writable; its value is set by the PSA and T0PS<2:0> bits of the T0CON register which determine the prescaler assignment and prescale ratio.

Clearing the PSA bit assigns the prescaler to the Timer0 module. When the prescaler is assigned, prescale values from 1:2 through 1:256 in integer power-of-2 increments are selectable.

When assigned to the Timer0 module, all instructions writing to the TMR0 register (e.g., `CLRF TMR0`, `MOVWF TMR0`, `BSF TMR0`, etc.) clear the prescaler count.

> **Note:** Writing to TMR0 when the prescaler is assigned to Timer0 will clear the prescaler count but will not change the prescaler assignment.

11.4.1 SWITCHING PRESCALER ASSIGNMENT

The prescaler assignment is fully under software control and can be changed “on-the-fly” during program execution.

11.5 Timer0 Interrupt

The TMR0 interrupt is generated when the TMR0 register overflows from FFh to 00h in 8-bit mode, or from FFFFh to 0000h in 16-bit mode. This overflow sets the TMR0IF flag bit. The interrupt can be masked by clearing the TMR0IE bit of the INTCON register. Before re-enabling the interrupt, the TMR0IF bit must be cleared by software in the Interrupt Service Routine.

Since Timer0 is shut down in Sleep mode, the TMR0 interrupt cannot awaken the processor from Sleep.

TABLE 11-1: REGISTERS ASSOCIATED WITH TIMER0

Name	Bit 7	Bit 6	Bit 5	Bit 4	Bit 3	Bit 2	Bit 1	Bit 0	Reset Values on page
INTCON	GIE/GIEH	PEIE/GIEL	TMR0IE	INT0IE	RBIE	TMR0IF	INT0IF	RBIF	109
INTCON2	$\overline{\text{RBPU}}$	INTEDG0	INTEDG1	INTEDG2	—	TMR0IP	—	RBIP	110
T0CON	TMR0ON	T08BIT	T0CS	T0SE	PSA	T0PS<2:0>			154
TMR0H	Timer0 Register, High Byte								—
TMR0L	Timer0 Register, Low Byte								—
TRISA	TRISA7	TRISA6	TRISA5	TRISA4	TRISA3	TRISA2	TRISA1	TRISA0	151

Legend: — = unimplemented locations, read as ‘0’. Shaded bits are not used by Timer0.

© 2010-2016 Microchip Technology Inc.

12.0 TIMER1/3/5 MODULE WITH GATE CONTROL

The Timer1/3/5 module is a 16-bit timer/counter with the following features:

- 16-bit timer/counter register pair (TMRxH:TMRxL)
- Programmable internal or external clock source
- 2-bit prescaler
- Dedicated Secondary 32 kHz oscillator circuit
- Optionally synchronized comparator out
- Multiple Timer1/3/5 gate (count enable) sources
- Interrupt on overflow
- Wake-up on overflow (external clock, Asynchronous mode only)
- 16-Bit Read/Write Operation
- Time base for the Capture/Compare function
- Special Event Trigger (with CCP/ECCP)
- Selectable Gate Source Polarity
- Gate Toggle mode
- Gate Single-pulse mode
- Gate Value Status
- Gate Event Interrupt

Figure 12-1 is a block diagram of the Timer1/3/5 module.

FIGURE 12-1: TIMER1/3/5 BLOCK DIAGRAM

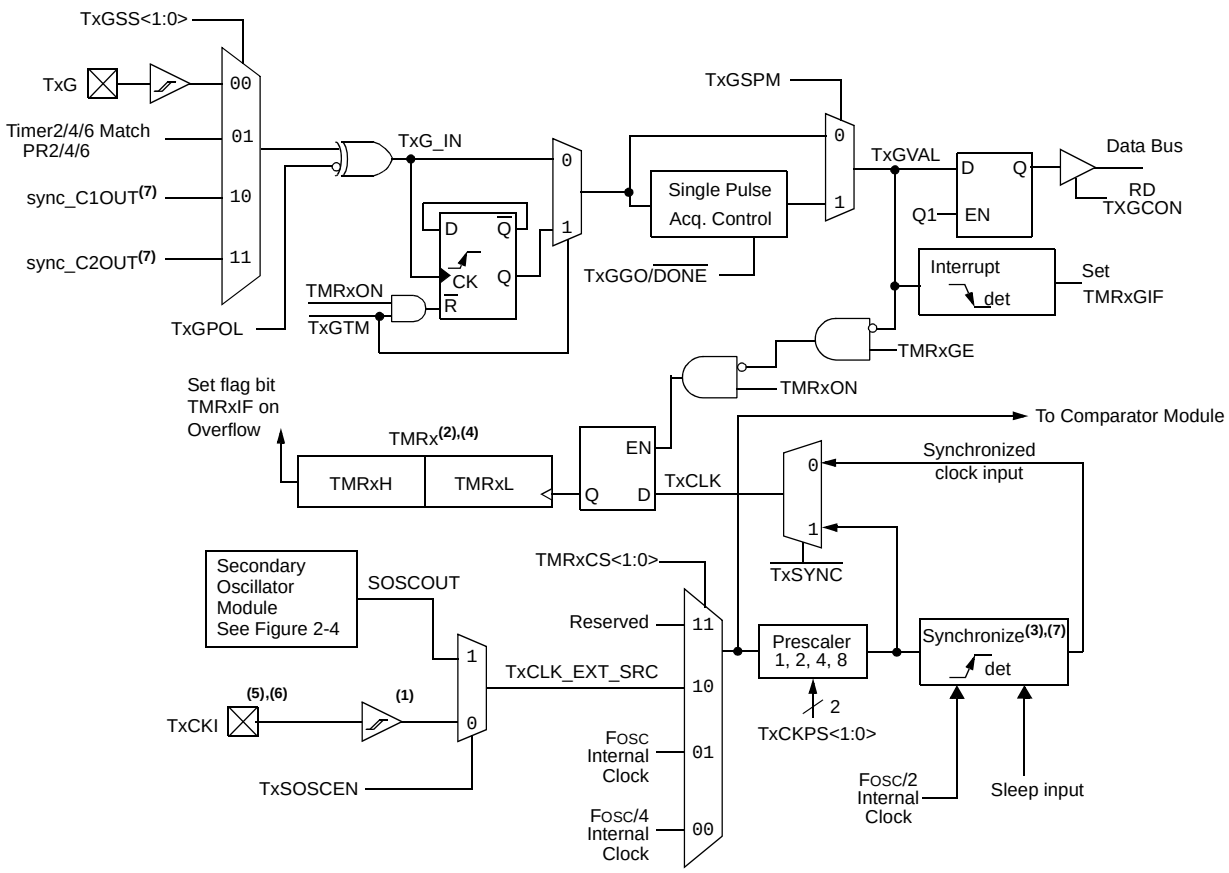

Note 1: ST Buffer is high speed type when using TxCKI.
2: Timer1/3/5 register increments on rising edge.
3: Synchronize does not operate while in Sleep.
4: See Figure 12-2 for 16-Bit Read/Write Mode Block Diagram.
5: T1CKI is not available when the secondary oscillator is enabled. (SOSCGO = 1 or TXSOSCEN = 1)
6: T3CKI is not available when the secondary oscillator is enabled, unless T3CMX = 1.
7: Synchronized comparator output should not be used in conjunction with synchronized TxCKI.

12.1 Timer1/3/5 Operation

The Timer1/3/5 module is a 16-bit incrementing counter which is accessed through the TMRxH:TMRxL register pair. Writes to TMRxH or TMRxL directly update the counter.

When used with an internal clock source, the module is a timer and increments on every instruction cycle. When used with an external clock source, the module can be used as either a timer or counter and increments on every selected edge of the external source.

Timer1/3/5 is enabled by configuring the TMRxON and TMRxGE bits in the TxCON and TxGCON registers, respectively. Table 12-1 displays the Timer1/3/5 enable selections.

TABLE 12-1: TIMER1/3/5 ENABLE SELECTIONS

TMRxON	TMRxGE	Timer1/3/5 Operation
0	0	Off
0	1	Off
1	0	Always On
1	1	Count Enabled

12.2 Clock Source Selection

The TMRxCS<1:0> and TxSOSCEN bits of the TxCON register are used to select the clock source for Timer1/3/5. The dedicated Secondary Oscillator circuit can be used as the clock source for Timer1, Timer3 and Timer5, simultaneously. Any of the TxSOSCEN bits will enable the Secondary Oscillator circuit and select it as the clock source for that particular timer. Table 12-2 displays the clock source selections.

12.2.1 INTERNAL CLOCK SOURCE

When the internal clock source is selected the TMRxH:TMRxL register pair will increment on multiples of FOSC as determined by the Timer1/3/5 prescaler.

When the FOSC internal clock source is selected, the Timer1/3/5 register value will increment by four counts every instruction clock cycle. Due to this condition, a 2 LSB error in resolution will occur when reading the Timer1/3/5 value. To utilize the full resolution of Timer1/3/5, an asynchronous input signal must be used to gate the Timer1/3/5 clock input.

The following asynchronous sources may be used:

- Asynchronous event on the TxG pin to Timer1/3/5 Gate
- C1 or C2 comparator input to Timer1/3/5 Gate

12.2.2 EXTERNAL CLOCK SOURCE

When the external clock source is selected, the Timer1/3/5 module may work as a timer or a counter.

When enabled to count, Timer1/3/5 is incremented on the rising edge of the external clock input of the TxCKI pin. This external clock source can be synchronized to the microcontroller system clock or it can run asynchronously.

When used as a timer with a clock oscillator, an external 32.768 kHz crystal can be used in conjunction with the dedicated secondary internal oscillator circuit.

Note: In Counter mode, a falling edge must be registered by the counter prior to the first incrementing rising edge after any one or more of the following conditions:

- Timer1/3/5 enabled after POR
- Write to TMRxH or TMRxL
- Timer1/3/5 is disabled
- Timer1/3/5 is disabled (TMRxON = 0) when TxCKI is high then Timer1/3/5 is enabled (TMRxON=1) when TxCKI is low.

TABLE 12-2: CLOCK SOURCE SELECTIONS

TMRxCS1	TMRxCS0	TxSOSCEN	Clock Source
0	1	x	System Clock (FOSC)
0	0	x	Instruction Clock (FOSC/4)
1	0	0	External Clocking on TxCKI Pin
1	0	1	Osc.Circuit On SOSCI/SOSCO Pins

© 2010-2016 Microchip Technology Inc.

12.3 Timer1/3/5 Prescaler

Timer1/3/5 has four prescaler options allowing 1, 2, 4 or 8 divisions of the clock input. The TxCKPS bits of the TxCON register control the prescale counter. The prescale counter is not directly readable or writable; however, the prescaler counter is cleared upon a write to TMRxH or TMRxL.

12.4 Secondary Oscillator

A dedicated secondary low-power 32.768 kHz oscillator circuit is built-in between pins SOSCI (input) and SOSCO (amplifier output). This internal circuit is to be used in conjunction with an external 32.768 kHz crystal.

The oscillator circuit is enabled by setting the TxSOSCEN bit of the TxCON register, the SOSCGO bit of the OSCCON2 register or by selecting the secondary oscillator as the system clock by setting SCS<1:0> = `01` in the OSCCON register. The oscillator will continue to run during Sleep.

Note:	The oscillator requires a start-up and stabilization time before use. Thus, TxSOSCEN should be set and a suitable delay observed prior to enabling Timer1/3/5.

12.5 Timer1/3/5 Operation in Asynchronous Counter Mode

If control bit $\overline{\text{TxSYNC}}$ of the TxCON register is set, the external clock input is not synchronized. The timer increments asynchronously to the internal phase clocks. If external clock source is selected then the timer will continue to run during Sleep and can generate an interrupt on overflow, which will wake-up the processor. However, special precautions in software are needed to read/write the timer (see **Section 12.5.1 "Reading and Writing Timer1/3/5 in Asynchronous Counter Mode"**).

Note:	When switching from synchronous to asynchronous operation, it is possible to skip an increment. When switching from asynchronous to synchronous operation, it is possible to produce an additional increment.

12.5.1 READING AND WRITING TIMER1/3/5 IN ASYNCHRONOUS COUNTER MODE

Reading TMRxH or TMRxL while the timer is running from an external asynchronous clock will ensure a valid read (taken care of in hardware). However, the user should keep in mind that reading the 16-bit timer in two 8-bit values itself, poses certain problems, since the timer may overflow between the reads. For writes, it is recommended that the user simply stop the timer and write the desired values. A write contention may occur by writing to the timer registers, while the register is incrementing. This may produce an unpredictable value in the TMRxH:TMRxL register pair.

12.6 Timer1/3/5 16-Bit Read/Write Mode

Timer1/3/5 can be configured to read and write all 16 bits of data, to and from, the 8-bit TMRxL and TMRxH registers, simultaneously. The 16-bit read and write operations are enabled by setting the RD16 bit of the TxCON register.

To accomplish this function, the TMRxH register value is mapped to a buffer register called the TMRxH buffer register. While in 16-Bit mode, the TMRxH register is not directly readable or writable and all read and write operations take place through the use of this TMRxH buffer register.

When a read from the TMRxL register is requested, the value of the TMRxH register is simultaneously loaded into the TMRxH buffer register. When a read from the TMRxH register is requested, the value is provided from the TMRxH buffer register instead. This provides the user with the ability to accurately read all 16 bits of the Timer1/3/5 value from a single instance in time.

In contrast, when not in 16-Bit mode, the user must read each register separately and determine if the values have become invalid due to a rollover that may have occurred between the read operations.

When a write request of the TMRxL register is requested, the TMRxH buffer register is simultaneously updated with the contents of the TMRxH register. The value of TMRxH must be preloaded into the TMRxH buffer register prior to the write request for the TMRxL register. This provides the user with the ability to write all 16 bits to the TMRxL:TMRxH register pair at the same time.

Any requests to write to the TMRxH directly does not clear the Timer1/3/5 prescaler value. The prescaler value is only cleared through write requests to the TMRxL register.

© 2010-2016 Microchip Technology Inc.

FIGURE 12-2: TIMER1/3/5 16-BIT READ/WRITE MODE BLOCK DIAGRAM

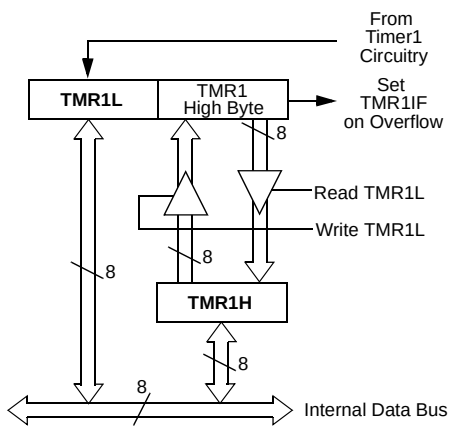

Block Diagram of Timer1 Example of TIMER1/3/5

12.7 Timer1/3/5 Gate

Timer1/3/5 can be configured to count freely or the count can be enabled and disabled using Timer1/3/5 Gate circuitry. This is also referred to as Timer1/3/5 Gate Enable.

Timer1/3/5 Gate can also be driven by multiple selectable sources.

12.7.1 TIMER1/3/5 GATE ENABLE

The Timer1/3/5 Gate Enable mode is enabled by setting the TMRxGE bit of the TxGCON register. The polarity of the Timer1/3/5 Gate Enable mode is configured using the TxGPOL bit of the TxGCON register.

When Timer1/3/5 Gate Enable mode is enabled, Timer1/3/5 will increment on the rising edge of the Timer1/3/5 clock source. When Timer1/3/5 Gate Enable mode is disabled, no incrementing will occur and Timer1/3/5 will hold the current count. See Figure 12-4 for timing details.

TABLE 12-3: TIMER1/3/5 GATE ENABLE SELECTIONS

TxCLK	TxGPOL	TxG	Timer1/3/5 Operation
↑	0	0	Counts
↑	0	1	Holds Count
↑	1	0	Holds Count
↑	1	1	Counts

12.7.2 TIMER1/3/5 GATE SOURCE SELECTION

The Timer1/3/5 Gate source can be selected from one of four different sources. Source selection is controlled by the TxGSS bits of the TxGCON register. The polarity for each available source is also selectable. Polarity selection is controlled by the TxGPOL bit of the TxGCON register.

TABLE 12-4: TIMER1/3/5 GATE SOURCES

TxGSS	Timer1/3/5 Gate Source
00	Timer1/3/5 Gate Pin
01	Timer2/4/6 Match to PR2/4/6 (TMR2/4/6 increments to match PR2/4/6)
10	Comparator 1 Output sync_C1OUT (optionally Timer1/3/5 synchronized output)
11	Comparator 2 Output sync_C2OUT (optionally Timer1/3/5 synchronized output)

The Gate resource, Timer2 Match to PR2, changes between Timer2, Timer4 and Timer6 depending on which of the three 16-bit Timers, Timer1, Timer3 or Timer5, is selected. See Table 12-5 to determine which Timer2/4/6 Match to PR2/4/6 combination is available for the 16-bit timer being used.

TABLE 12-5: GATE RESOURCES FOR TIMER2/4/6 MATCH TO PR2/4/6

Timer1/3/5 Resource	Timer1/3/5 Gate Match Selection
Timer1	TMR2 Match to PR2
Timer3	TMR4 Match to PR4
Timer5	TMR6 Match to PR6

12.7.2.1 TxG Pin Gate Operation

The TxG pin is one source for Timer1/3/5 Gate Control. It can be used to supply an external source to the Timer1/3/5 Gate circuitry.

12.7.2.2 Timer2/4/6 Match Gate Operation

The TMR2/4/6 register will increment until it matches the value in the PR2/4/6 register. On the very next increment cycle, TMR2/4/6 will be reset to 00h. When this Reset occurs, a low-to-high pulse will automatically be generated and internally supplied to the Timer1/3/5 Gate circuitry. When both TMR2/4/6 and Timer 1/3/5 use FOSC/4 as the clock source then Timer 1/3/5 will increment once during the TMR2/4/6 overflow pulse. This concatenation creates a 24-bit timer. When used in conjunction with the CCP special event trigger very long periodic interrupts can be generated.

© 2010-2016 Microchip Technology Inc.

12.7.2.3 Comparator C1 Gate Operation

The output resulting from a Comparator 1 operation can be selected as a source for Timer1/3/5 Gate Control. The Comparator 1 output (sync_C1OUT) can be synchronized to the Timer1/3/5 clock or left asynchronous. For more information see **Section 18.8.4 "Synchronizing Comparator Output to Timer1"**.

12.7.2.4 Comparator C2 Gate Operation

The output resulting from a Comparator 2 operation can be selected as a source for Timer1/3/5 Gate Control. The Comparator 2 output (sync_C2OUT) can be synchronized to the Timer1/3/5 clock or left asynchronous. For more information see **Section 18.8.4 "Synchronizing Comparator Output to Timer1"**.

12.7.3 TIMER1/3/5 GATE TOGGLE MODE

When Timer1/3/5 Gate Toggle mode is enabled, it is possible to measure the full-cycle length of a Timer1/3/5 gate signal, as opposed to the duration of a single level pulse.

The Timer1/3/5 Gate source is routed through a flip-flop that changes state on every incrementing edge of the signal. See Figure 12-5 for timing details.

Timer1/3/5 Gate Toggle mode is enabled by setting the TxGTM bit of the TxGCON register. When the TxGTM bit is cleared, the flip-flop is cleared and held clear. This is necessary in order to control which edge is measured.

Note:	Enabling Toggle mode at the same time as changing the gate polarity may result in indeterminate operation.

12.7.4 TIMER1/3/5 GATE SINGLE-PULSE MODE

When Timer1/3/5 Gate Single-Pulse mode is enabled, it is possible to capture a single-pulse gate event. Timer1/3/5 Gate Single-Pulse mode is first enabled by setting the TxGSPM bit in the TxGCON register. Next, the TxGGO/$\overline{\text{DONE}}$ bit in the TxGCON register must be set. The Timer1/3/5 will be fully enabled on the next incrementing edge. On the next trailing edge of the pulse, the TxGGO/$\overline{\text{DONE}}$ bit will automatically be cleared. No other gate events will be allowed to increment Timer1/3/5 until the TxGGO/$\overline{\text{DONE}}$ bit is once again set in software.

Clearing the TxGSPM bit of the TxGCON register will also clear the TxGGO/$\overline{\text{DONE}}$ bit. See Figure 12-6 for timing details.

Enabling the Toggle mode and the Single-Pulse mode simultaneously will permit both sections to work together. This allows the cycle times on the Timer1/3/5 Gate source to be measured. See Figure 12-7 for timing details.

12.7.5 TIMER1/3/5 GATE VALUE STATUS

When Timer1/3/5 Gate Value Status is utilized, it is possible to read the most current level of the gate control value. The value is stored in the TxGVAL bit in the TxGCON register. The TxGVAL bit is valid even when the Timer1/3/5 Gate is not enabled (TMRxGE bit is cleared).

12.7.6 TIMER1/3/5 GATE EVENT INTERRUPT

When Timer1/3/5 Gate Event Interrupt is enabled, it is possible to generate an interrupt upon the completion of a gate event. When the falling edge of TxGVAL occurs, the TMRxGIF flag bit in the PIR3 register will be set. If the TMRxGIE bit in the PIE3 register is set, then an interrupt will be recognized.

The TMRxGIF flag bit operates even when the Timer1/3/5 Gate is not enabled (TMRxGE bit is cleared).

For more information on selecting high or low priority status for the Timer1/3/5 Gate Event Interrupt see **Section 9.0 "Interrupts"**.

12.8 Timer1/3/5 Interrupt

The Timer1/3/5 register pair (TMRxH:TMRxL) increments to FFFFh and rolls over to 0000h. When Timer1/3/5 rolls over, the Timer1/3/5 interrupt flag bit of the PIR1/2/5 register is set. To enable the interrupt on rollover, you must set these bits:

- TMRxON bit of the TxCON register
- TMRxIE bits of the PIE1, PIE2 or PIE5 registers
- PEIE/GIEL bit of the INTCON register
- GIE/GIEH bit of the INTCON register

The interrupt is cleared by clearing the TMRxIF bit in the Interrupt Service Routine.

For more information on selecting high or low priority status for the Timer1/3/5 Overflow Interrupt, see **Section 9.0 "Interrupts"**.

Note:	The TMRxH:TMRxL register pair and the TMRxIF bit should be cleared before enabling interrupts.

12.9 Timer1/3/5 Operation During Sleep

Timer1/3/5 can only operate during Sleep when set up in Asynchronous Counter mode. In this mode, an external crystal or clock source can be used to increment the counter. To set up the timer to wake the device:

- TMRxON bit of the TxCON register must be set
- TMRxIE bit of the PIE1/2/5 register must be set
- PEIE/GIEL bit of the INTCON register must be set
- $\overline{\text{TxSYNC}}$ bit of the TxCON register must be set
- TMRxCS bits of the TxCON register must be configured
- TxSOSCEN bit of the TxCON register must be configured

The device will wake-up on an overflow and execute the next instruction. If the GIE/GIEH bit of the INTCON register is set, the device will call the Interrupt Service Routine.

The secondary oscillator will continue to operate in Sleep regardless of the $\overline{\text{TxSYNC}}$ bit setting.

12.10 ECCP/CCP Capture/Compare Time Base

The CCP modules use the TMRxH:TMRxL register pair as the time base when operating in Capture or Compare mode.

In Capture mode, the value in the TMRxH:TMRxL register pair is copied into the CCPRxH:CCPRxL register pair on a configured event.

In Compare mode, an event is triggered when the value CCPRxH:CCPRxL register pair matches the value in the TMRxH:TMRxL register pair. This event can be a Special Event Trigger.

For more information, see **Section 14.0 "Capture/Compare/PWM Modules"**.

12.11 ECCP/CCP Special Event Trigger

When any of the CCP's are configured to trigger a special event, the trigger will clear the TMRxH:TMRxL register pair. This special event does not cause a Timer1/3/5 interrupt. The CCP module may still be configured to generate a CCP interrupt.

In this mode of operation, the CCPRxH:CCPRxL register pair becomes the period register for Timer1/3/5.

Timer1/3/5 should be synchronized and FOSC/4 should be selected as the clock source in order to utilize the Special Event Trigger. Asynchronous operation of Timer1/3/5 can cause a Special Event Trigger to be missed.

In the event that a write to TMRxH or TMRxL coincides with a Special Event Trigger from the CCP, the write will take precedence.

For more information, see **Section 17.2.8 "Special Event Trigger"**.

© 2010-2016 Microchip Technology Inc.

FIGURE 12-3: TIMER1/3/5 INCREMENTING EDGE

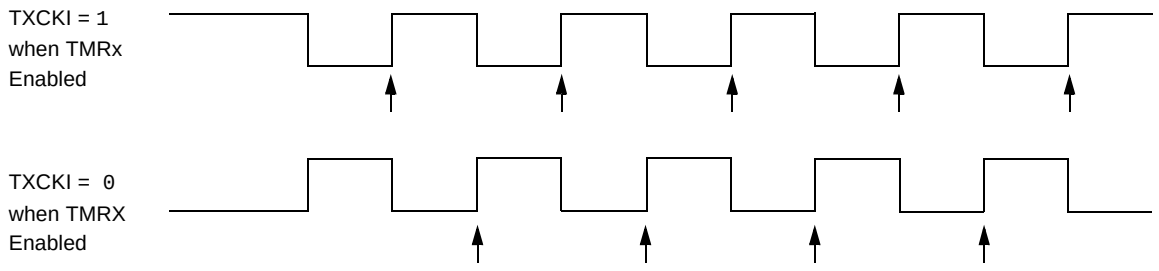

Note 1: Arrows indicate counter increments.

2: In Counter mode, a falling edge must be registered by the counter prior to the first incrementing rising edge of the clock.

FIGURE 12-4: TIMER1/3/5 GATE ENABLE MODE

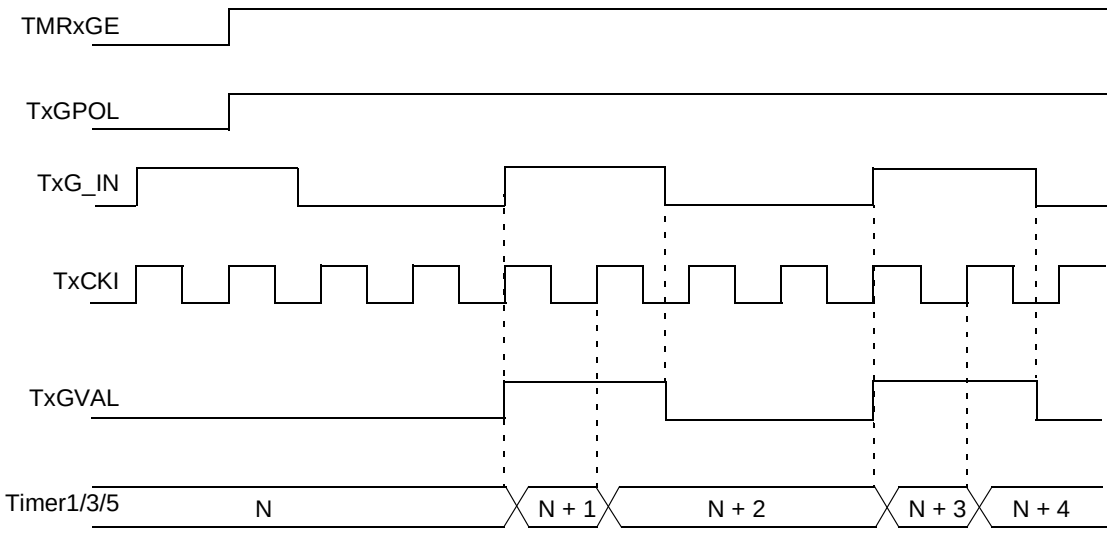

FIGURE 12-5: TIMER1/3/5 GATE TOGGLE MODE

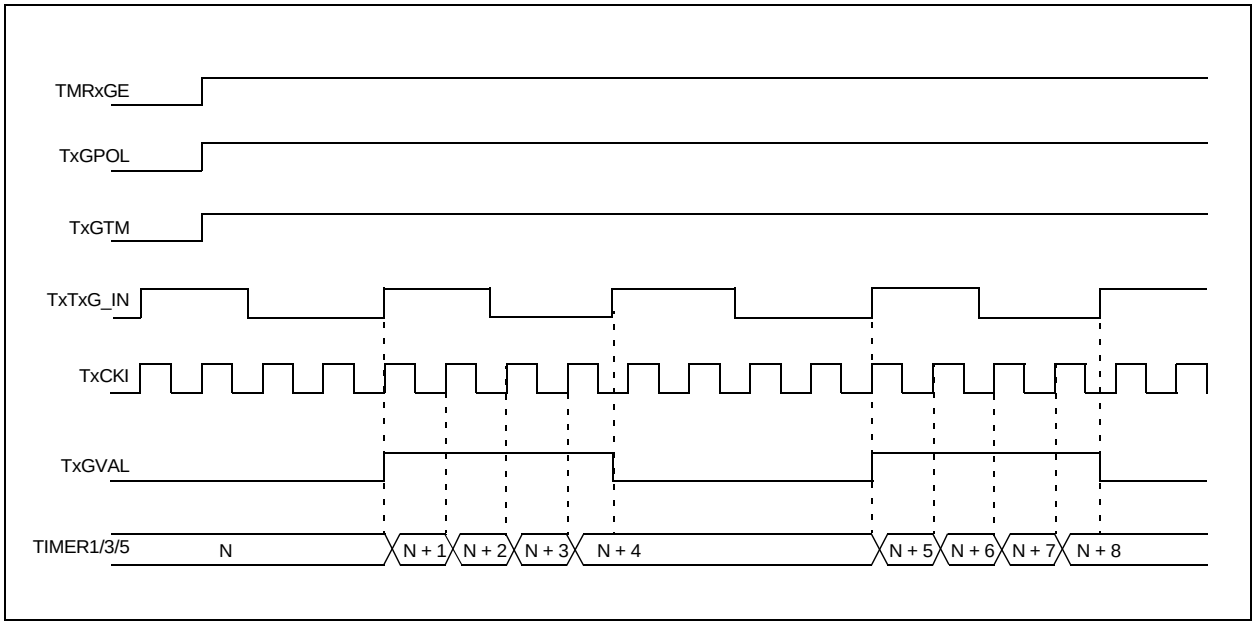

FIGURE 12-6: TIMER1/3/5 GATE SINGLE-PULSE MODE

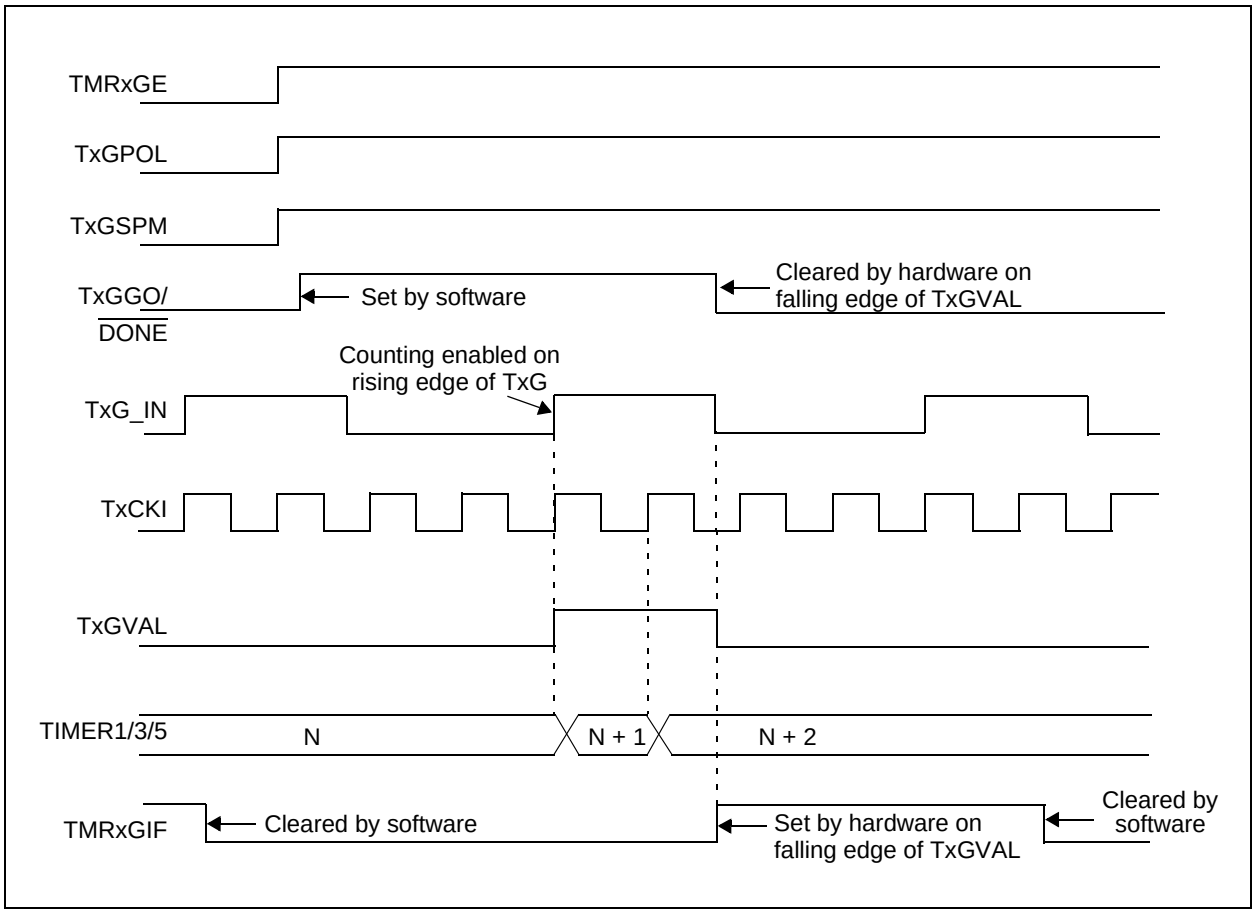

© 2010-2016 Microchip Technology Inc.

FIGURE 12-7: TIMER1/3/5 GATE SINGLE-PULSE AND TOGGLE COMBINED MODE

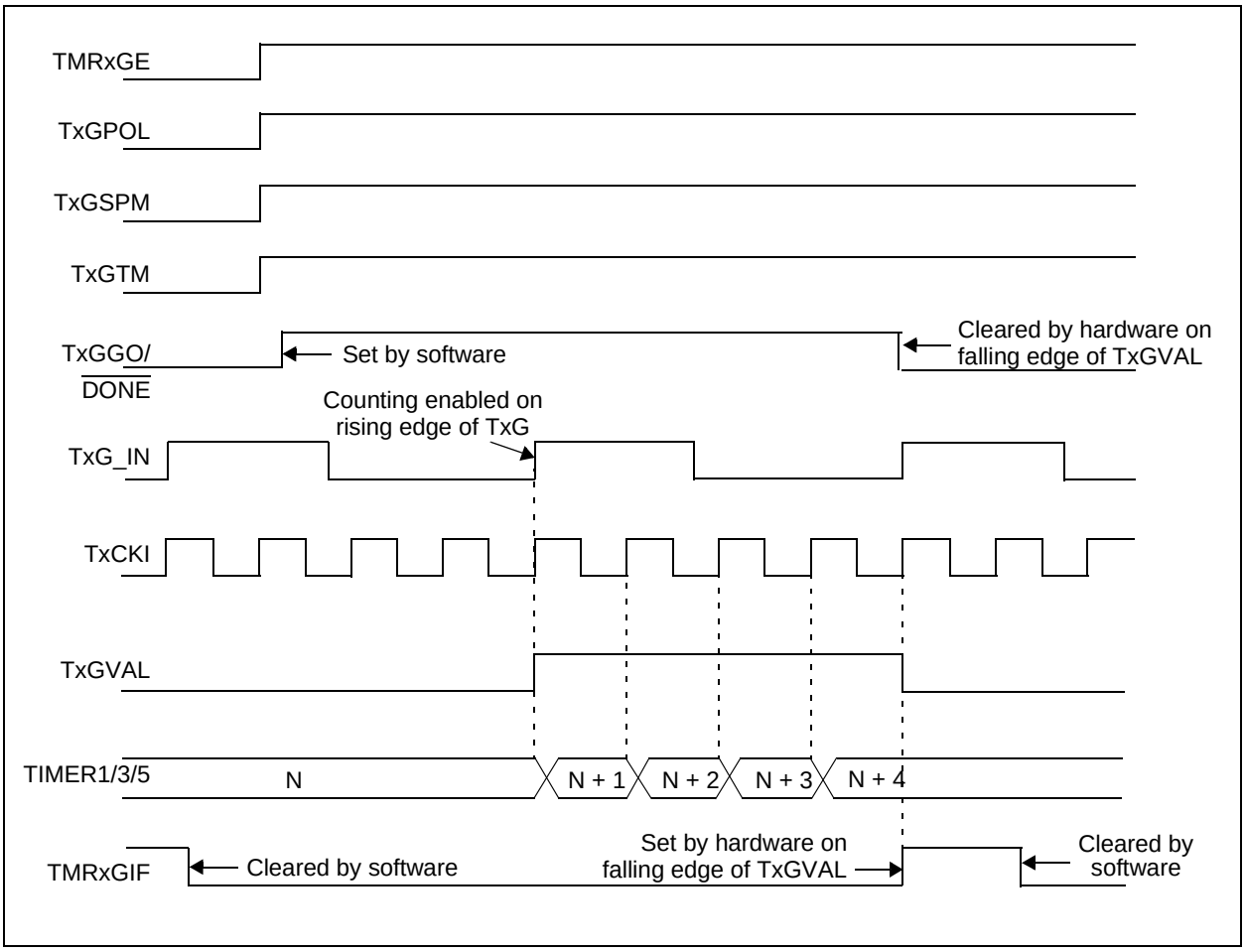

12.12 Peripheral Module Disable

When a peripheral module is not used or inactive, the module can be disabled by setting the Module Disable bit in the PMD registers. This will reduce power consumption to an absolute minimum. Setting the PMD bits holds the module in Reset and disconnects the module's clock source. The Module Disable bits for Timer1 (TMR1MD), Timer3 (TMR3MD) and Timer5 (TMR5MD) are in the PMD0 Register. See **Section 3.0 "Power-Managed Modes"** for more information.

12.13 Register Definitions: Timer1/3/5 Control

REGISTER 12-1: TXCON: TIMER1/3/5 CONTROL REGISTER

R/W-0/u	R/W-0/u	R/W-0/u	R/W-0/u	R/W-0/u	R/W-0/u	R/W-0/0	R/W-0/u
TMRxCS<1:0>		TxCKPS<1:0>		TxSOSCEN	$\overline{\text{TxSYNC}}$	TxRD16	TMRxON
bit 7							bit 0

Legend:		
R = Readable bit	W = Writable bit	U = Unimplemented bit, read as ‘0’
u = Bit is unchanged	x = Bit is unknown	-n/n = Value at POR and BOR/Value at all other Resets
‘1’ = Bit is set	‘0’ = Bit is cleared	

bit 7-6 **TMRxCS<1:0>:** Timer1/3/5 Clock Source Select bits
- 11 = Reserved. Do not use.
- 10 = Timer1/3/5 clock source is pin or oscillator:
  - If TxSOSCEN = 0:
  - External clock from TxCKI pin (on the rising edge)
  - If TxSOSCEN = 1:
  - Crystal oscillator on SOSCI/SOSCO pins
- 01 = Timer1/3/5 clock source is system clock (FOSC)
- 00 = Timer1/3/5 clock source is instruction clock (FOSC/4)

bit 5-4 **TxCKPS<1:0>:** Timer1/3/5 Input Clock Prescale Select bits
- 11 = 1:8 Prescale value
- 10 = 1:4 Prescale value
- 01 = 1:2 Prescale value
- 00 = 1:1 Prescale value

bit 3 **TxSOSCEN:** Secondary Oscillator Enable Control bit
- 1 = Dedicated Secondary oscillator circuit enabled
- 0 = Dedicated Secondary oscillator circuit disabled

bit 2 **$\overline{\text{TxSYNC}}$:** Timer1/3/5 External Clock Input Synchronization Control bit

TMRxCS<1:0> = 1X
- 1 = Do not synchronize external clock input
- 0 = Synchronize external clock input with system clock (FOSC)

TMRxCS<1:0> = 0X

This bit is ignored. Timer1/3/5 uses the internal clock when TMRxCS<1:0> = 1X.

bit 1 **TxRD16:** 16-Bit Read/Write Mode Enable bit
- 1 = Enables register read/write of Timer1/3/5 in one 16-bit operation
- 0 = Enables register read/write of Timer1/3/5 in two 8-bit operation

bit 0 **TMRxON:** Timer1/3/5 On bit
- 1 = Enables Timer1/3/5
- 0 = Stops Timer1/3/5
  - Clears Timer1/3/5 Gate flip-flop

© 2010-2016 Microchip Technology Inc.

REGISTER 12-2: TXGCON: TIMER1/3/5 GATE CONTROL REGISTER

R/W-0/u	R/W-0/u	R/W-0/u	R/W-0/u	R/W/HC-0/u	R-x/x	R/W-0/u	R/W-0/u
TMRxGE	TxGPOL	TxGTM	TxGSPM	TxGGO/$\overline{\text{DONE}}$	TxGVAL	TxGSS<1:0>	
bit 7							bit 0

Legend:		
R = Readable bit	W = Writable bit	U = Unimplemented bit, read as ‘0’
u = Bit is unchanged	x = Bit is unknown	-n/n = Value at POR and BOR/Value at all other Resets
‘1’ = Bit is set	‘0’ = Bit is cleared	HC = Bit is cleared by hardware

bit 7 **TMRxGE:** Timer1/3/5 Gate Enable bit
If TMRxON = 0:
This bit is ignored
If TMRxON = 1:
1 = Timer1/3/5 counting is controlled by the Timer1/3/5 gate function
0 = Timer1/3/5 counts regardless of Timer1/3/5 gate function

bit 6 **TxGPOL:** Timer1/3/5 Gate Polarity bit
1 = Timer1/3/5 gate is active-high (Timer1/3/5 counts when gate is high)
0 = Timer1/3/5 gate is active-low (Timer1/3/5 counts when gate is low)

bit 5 **TxGTM:** Timer1/3/5 Gate Toggle Mode bit
1 = Timer1/3/5 Gate Toggle mode is enabled
0 = Timer1/3/5 Gate Toggle mode is disabled and toggle flip-flop is cleared
Timer1/3/5 gate flip-flop toggles on every rising edge.

bit 4 **TxGSPM:** Timer1/3/5 Gate Single-Pulse Mode bit
1 = Timer1/3/5 gate Single-Pulse mode is enabled and is controlling Timer1/3/5 gate
0 = Timer1/3/5 gate Single-Pulse mode is disabled

bit 3 **TxGGO/$\overline{\text{DONE}}$:** Timer1/3/5 Gate Single-Pulse Acquisition Status bit
1 = Timer1/3/5 gate single-pulse acquisition is ready, waiting for an edge
0 = Timer1/3/5 gate single-pulse acquisition has completed or has not been started
This bit is automatically cleared when TxGSPM is cleared.

bit 2 **TxGVAL:** Timer1/3/5 Gate Current State bit
Indicates the current state of the Timer1/3/5 gate that could be provided to TMRxH:TMRxL.
Unaffected by Timer1/3/5 Gate Enable (TMRxGE).

bit 1-0 **TxGSS<1:0>:** Timer1/3/5 Gate Source Select bits
00 = Timer1/3/5 Gate pin
01 = Timer2/4/6 Match PR2/4/6 output (See Table 12-5 for proper timer match selection)
10 = Comparator 1 optionally synchronized output (sync_C1OUT)
11 = Comparator 2 optionally synchronized output (sync_C2OUT)

TABLE 12-6: REGISTERS ASSOCIATED WITH TIMER1/3/5 AS A TIMER/COUNTER

Name	Bit 7	Bit 6	Bit 5	Bit 4	Bit 3	Bit 2	Bit 1	Bit 0	Reset Values on Page
ANSELB	—	—	ANSB5	ANSB4	ANSB3	ANSB2	ANSB1	ANSB0	150
ANSELC	ANSC7	ANSC6	ANSC5	ANSC4	ANSC3	ANSC2	—	—	150
INTCON	GIE/GIEH	PEIE/GIEL	TMR0IE	INT0IE	RBIE	TMR0IF	INT0IF	RBIF	109
IPR1	—	ADIP	RC1IP	TX1IP	SSP1IP	CCP1IP	TMR2IP	TMR1IP	121
IPR2	OSCFIP	C1IP	C2IP	EEIP	BCL1IP	HLVDIP	TMR3IP	CCP2IP	122
IPR3	SSP2IP	BCL2IP	RC2IP	TX2IP	CTMUIP	TMR5GIP	TMR3GIP	TMR1GIP	123
IPR5	—	—	—	—	—	TMR6IP	TMR5IP	TMR4IP	124
PIE1	—	ADIE	RC1IE	TX1IE	SSP1IE	CCP1IE	TMR2IE	TMR1IE	117
PIE2	OSCFIE	C1IE	C2IE	EEIE	BCL1IE	HLVDIE	TMR3IE	CCP2IE	118
PIE3	SSP2IE	BCL2IE	RC2IE	TX2IE	CTMUIE	TMR5GIE	TMR3GIE	TMR1GIE	119
PIE5	—	—	—	—	—	TMR6IE	TMR5IE	TMR4IE	120
PIR1	—	ADIF	RC1IF	TX1IF	SSP1IF	CCP1IF	TMR2IF	TMR1IF	112
PIR2	OSCFIF	C1IF	C2IF	EEIF	BCL1IF	HLVDIF	TMR3IF	CCP2IF	113
PIR3	SSP2IF	BCL2IF	RC2IF	TX2IF	CTMUIF	TMR5GIF	TMR3GIF	TMR1GIF	114
PIR5	—	—	—	—	—	TMR6IF	TMR5IF	TMR4IF	116
PMD0	UART2MD	UART1MD	TMR6MD	TMR5MD	TMR4MD	TMR3MD	TMR2MD	TMR1MD	52
T1CON	TMR1CS<1:0>		T1CKPS<1:0>		T1SOSCEN	$\overline{\text{T1SYNC}}$	T1RD16	TMR1ON	166
T1GCON	TMR1GE	T1GPOL	T1GTM	T1GSPM	T1GGO/$\overline{\text{DONE}}$	T1GVAL	T1GSS<1:0>		167
T3CON	TMR3CS<1:0>		T3CKPS<1:0>		T3SOSCEN	$\overline{\text{T3SYNC}}$	T3RD16	TMR3ON	166
T3GCON	TMR3GE	T3GPOL	T3GTM	T3GSPM	T3GGO/$\overline{\text{DONE}}$	T3GVAL	T3GSS<1:0>		167
T5CON	TMR5CS<1:0>		T5CKPS<1:0>		T5SOSCEN	$\overline{\text{T5SYNC}}$	T5RD16	TMR5ON	166
T5GCON	TMR5GE	T5GPOL	T5GTM	T5GSPM	T5GGO/$\overline{\text{DONE}}$	T5GVAL	T5GSS<1:0>		167
TMR1H	Holding Register for the Most Significant Byte of the 16-bit TMR1 Register								—
TMR1L	Least Significant Byte of the 16-bit TMR1 Register								—
TMR3H	Holding Register for the Most Significant Byte of the 16-bit TMR3 Register								—
TMR3L	Least Significant Byte of the 16-bit TMR3 Register								—
TMR5H	Holding Register for the Most Significant Byte of the 16-bit TMR5 Register								—
TMR5L	Least Significant Byte of the 16-bit TMR5 Register								—
TRISB	TRISB7	TRISB6	TRISB5	TRISB4	TRISB3	TRISB2	TRISB1	TRISB0	151
TRISC	TRISC7	TRISC6	TRISC5	TRISC4	TRISC3	TRISC2	TRISC1	TRISC0	151

TABLE 12-7: CONFIGURATION REGISTERS ASSOCIATED WITH TIMER1/3/5

Name	Bit 7	Bit 6	Bit 5	Bit 4	Bit 3	Bit 2	Bit 1	Bit 0	Reset Values on Page
CONFIG3H	MCLRE	—	P2BMX	T3CMX	HFOFST	CCP3MX	PBADEN	CCP2MX	348

© 2010-2016 Microchip Technology Inc.

13.0 TIMER2/4/6 MODULE

There are three identical 8-bit Timer2-type modules available. To maintain pre-existing naming conventions, the Timers are called Timer2, Timer4 and Timer6 (also Timer2/4/6).

Note:	The ‘x’ variable used in this section is used to designate Timer2, Timer4, or Timer6. For example, TxCON references T2CON, T4CON, or T6CON. PRx references PR2, PR4, or PR6.

The Timer2/4/6 module incorporates the following features:

- 8-bit Timer and Period registers (TMRx and PRx, respectively)
- Readable and writable (both registers)
- Software programmable prescaler (1:1, 1:4, 1:16)
- Software programmable postscaler (1:1 to 1:16)
- Interrupt on TMRx match with PRx, respectively
- Optional use as the shift clock for the MSSPx modules (Timer2 only)

See Figure 13-1 for a block diagram of Timer2/4/6.

FIGURE 13-1: TIMER2/4/6 BLOCK DIAGRAM

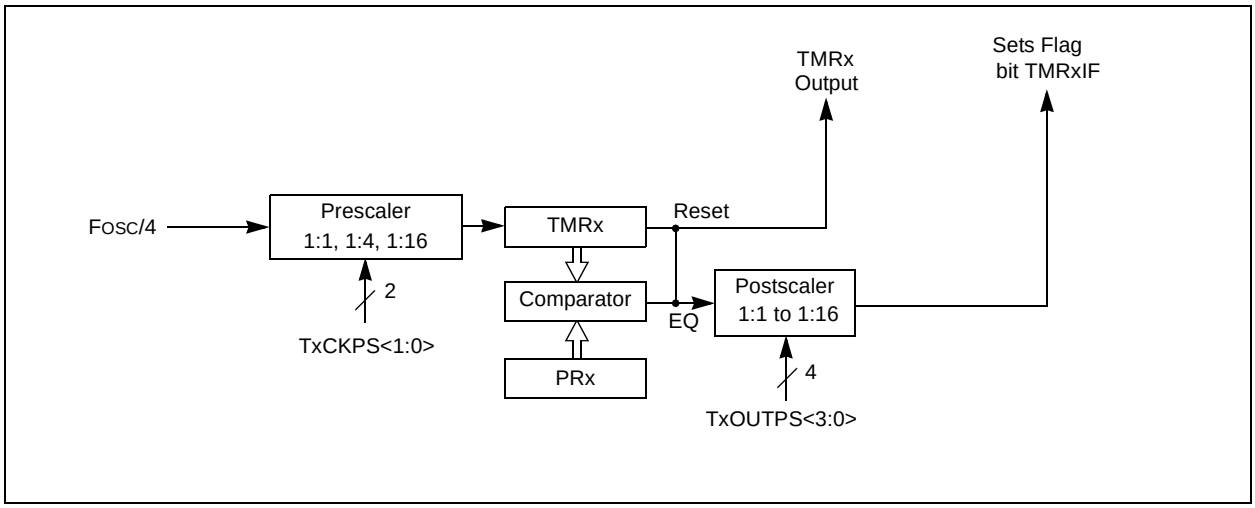

13.1 Timer2/4/6 Operation

The clock input to the Timer2/4/6 module is the system instruction clock (FOSC/4).

TMRx increments from 00h on each clock edge.

A 4-bit counter/prescaler on the clock input allows direct input, divide-by-4 and divide-by-16 prescale options. These options are selected by the prescaler control bits, TxCKPS<1:0> of the TxCON register. The value of TMRx is compared to that of the Period register, PRx, on each clock cycle. When the two values match, the comparator generates a match signal as the timer output. This signal also resets the value of TMRx to 00h on the next cycle and drives the output counter/postscaler (see **Section 13.2 "Timer2/4/6 Interrupt"**).

The TMRx and PRx registers are both directly readable and writable. The TMRx register is cleared on any device Reset, whereas the PRx register initializes to FFh. Both the prescaler and postscaler counters are cleared on the following events:

- a write to the TMRx register
- a write to the TxCON register
- Power-on Reset (POR)
- Brown-out Reset (BOR)
- $\overline{\text{MCLR}}$ Reset
- Watchdog Timer (WDT) Reset
- Stack Overflow Reset
- Stack Underflow Reset
- RESET Instruction

Note:	TMRx is not cleared when TxCON is written.

13.2 Timer2/4/6 Interrupt

Timer2/4/6 can also generate an optional device interrupt. The Timer2/4/6 output signal (TMRx-to-PRx match) provides the input for the 4-bit counter/postscaler. This counter generates the TMRx match interrupt flag which is latched in TMRxIF of the PIR1/PIR5 registers. The interrupt is enabled by setting the TMRx Match Interrupt Enable bit, TMRxIE of the PIE1/PIE5 registers. Interrupt Priority is selected with the TMRxIP bit in the IPR1/IPR5 registers.

A range of 16 postscale options (from 1:1 through 1:16 inclusive) can be selected with the postscaler control bits, TxOUTPS<3:0>, of the TxCON register.

13.3 Timer2/4/6 Output

The unscaled output of TMRx is available primarily to the CCP modules, where it is used as a time base for operations in PWM mode. The timer to be used with a specific CCP module is selected using the CxTSEL<1:0> bits in the CCPTMRS0 and CCPTMRS1 registers.

Timer2 can be optionally used as the shift clock source for the MSSPx modules operating in SPI mode by setting SSPM<3:0> = `0011` in the SSPxCON1 register. Additional information is provided in **Section 15.0 "Master Synchronous Serial Port (MSSP1 and MSSP2) Module"**.

13.4 Timer2/4/6 Operation During Sleep

The Timer2/4/6 timers cannot be operated while the processor is in Sleep mode. The contents of the TMRx and PRx registers will remain unchanged while the processor is in Sleep mode.

13.5 Peripheral Module Disable

When a peripheral module is not used or inactive, the module can be disabled by setting the Module Disable bit in the PMD registers. This will reduce power consumption to an absolute minimum. Setting the PMD bits holds the module in Reset and disconnects the module's clock source. The Module Disable bits for Timer2 (TMR2MD), Timer4 (TMR4MD) and Timer6 (TMR6MD) are in the PMD0 Register. See **Section 3.0 "Power-Managed Modes"** for more information.

© 2010-2016 Microchip Technology Inc.

13.6 Register Definitions: Timer2/4/6 Control

REGISTER 13-1: TxCON: TIMER2/TIMER4/TIMER6 CONTROL REGISTER

U-0	R/W-0	R/W-0	R/W-0	R/W-0	R/W-0	R/W-0	R/W-0
—	TxOUTPS<3:0>				TMRxON	TxCKPS<1:0>	
bit 7							bit 0

Legend:		
R = Readable bit	W = Writable bit	U = Unimplemented bit, read as ‘0’
u = Bit is unchanged	x = Bit is unknown	-n/n = Value at POR and BOR/Value at all other Resets
‘1’ = Bit is set	‘0’ = Bit is cleared	

bit 7 **Unimplemented:** Read as ‘0’

bit 6-3 **TxOUTPS<3:0>:** TimerX Output Postscaler Select bits
0000 = 1:1 Postscaler
0001 = 1:2 Postscaler
0010 = 1:3 Postscaler
0011 = 1:4 Postscaler
0100 = 1:5 Postscaler
0101 = 1:6 Postscaler
0110 = 1:7 Postscaler
0111 = 1:8 Postscaler
1000 = 1:9 Postscaler
1001 = 1:10 Postscaler
1010 = 1:11 Postscaler
1011 = 1:12 Postscaler
1100 = 1:13 Postscaler
1101 = 1:14 Postscaler
1110 = 1:15 Postscaler
1111 = 1:16 Postscaler

bit 2 **TMRxON:** TimerX On bit
1 = TimerX is on
0 = TimerX is off

bit 1-0 **TxCKPS<1:0>:** Timer2-type Clock Prescale Select bits
00 = Prescaler is 1
01 = Prescaler is 4
1x = Prescaler is 16

TABLE 13-1: SUMMARY OF REGISTERS ASSOCIATED WITH TIMER2/4/6

Name	Bit 7	Bit 6	Bit 5	Bit 4	Bit 3	Bit 2	Bit 1	Bit 0	Register on Page
CCPTMRS0	C3TSEL<1:0>		—	C2TSEL<1:0>		—	C1TSEL<1:0>		201
CCPTMRS1	—	—	—	—	C5TSEL<1:0>		C4TSEL<1:0>		201
INTCON	GIE/GIEH	PEIE/GIEL	TMR0IE	INT0IE	RBIE	TMR0IF	INT0IF	RBIF	109
IPR1	—	ADIP	RC1IP	TX1IP	SSP1IP	CCP1IP	TMR2IP	TMR1IP	121
IPR5	—	—	—	—	—	TMR6IP	TMR5IP	TMR4IP	124
PIE1	—	ADIE	RC1IE	TX1IE	SSP1IE	CCP1IE	TMR2IE	TMR1IE	117
PIE5	—	—	—	—	—	TMR6IE	TMR5IE	TMR4IE	120
PIR1	—	ADIF	RC1IF	TX1IF	SSP1IF	CCP1IF	TMR2IF	TMR1IF	112
PIR5	—	—	—	—	—	TMR6IF	TMR5IF	TMR4IF	116
PMD0	UART2MD	UART1MD	TMR6MD	TMR5MD	TMR4MD	TMR3MD	TMR2MD	TMR1MD	52
PR2	Timer2 Period Register								—
PR4	Timer4 Period Register								—
PR6	Timer6 Period Register								—
T2CON	—	T2OUTPS<3:0>				TMR2ON	T2CKPS<1:0>		166
T4CON	—	T4OUTPS<3:0>				TMR4ON	T4CKPS<1:0>		166
T6CON	—	T6OUTPS<3:0>				TMR6ON	T6CKPS<1:0>		166
TMR2	Timer2 Register								—
TMR4	Timer4 Register								—
TMR6	Timer6 Register								—

Legend: — = unimplemented locations, read as ‘0’. Shaded bits are not used by Timer2/4/6.

© 2010-2016 Microchip Technology Inc.

14.0 CAPTURE/COMPARE/PWM MODULES

The Capture/Compare/PWM module is a peripheral which allows the user to time and control different events, and to generate Pulse-Width Modulation (PWM) signals. In Capture mode, the peripheral allows the timing of the duration of an event. The Compare mode allows the user to trigger an external event when a predetermined amount of time has expired. The PWM mode can generate Pulse-Width Modulated signals of varying frequency and duty cycle.

This family of devices contains three Enhanced Capture/Compare/PWM modules (ECCP1, ECCP2, and ECCP3) and two standard Capture/Compare/PWM modules (CCP4 and CCP5).

The Capture and Compare functions are identical for all CCP/ECCP modules. The difference between CCP and ECCP modules are in the Pulse-Width Modulation (PWM) function. In CCP modules, the standard PWM function is identical. In ECCP modules, the Enhanced PWM function has either full-bridge or half-bridge PWM output. Full-bridge ECCP modules have four available I/O pins while half-bridge ECCP modules only have two available I/O pins. ECCP PWM modules are backward compatible with CCP PWM modules and can be configured as standard PWM modules. See Table 14-1 to determine the CCP/ECCP functionality available on each device in this family.

Note 1: In devices with more than one CCP module, it is very important to pay close attention to the register names used. A number placed after the module acronym is used to distinguish between separate modules. For example, the CCP1CON and CCP2CON control the same operational aspects of two completely different CCP modules.

2: Throughout this section, generic references to a CCP module in any of its operating modes may be interpreted as being equally applicable to ECCP1, ECCP2, ECCP3, CCP4 and CCP5. Register names, module signals, I/O pins, and bit names may use the generic designator ‘x’ to indicate the use of a numeral to distinguish a particular module, when required.

TABLE 14-1: PWM RESOURCES

Device Name	ECCP1	ECCP2	ECCP3	CCP4	CCP5
PIC18(L)F23K22 PIC18(L)F24K22 PIC18(L)F25K22 PIC18(L)F26K22	Enhanced PWM Full-Bridge	Enhanced PWM Half-Bridge	Enhanced PWM Half-Bridge	Standard PWM	Standard PWM (Special Event Trigger)
PIC18(L)F43K22 PIC18(L)F44K22 PIC18(L)F45K22 PIC18(L)F46K22	Enhanced PWM Full-Bridge	Enhanced PWM Full-Bridge	Enhanced PWM Half-Bridge	Standard PWM	Standard PWM (Special Event Trigger)

14.1 Capture Mode

The Capture mode function described in this section is identical for all CCP and ECCP modules available on this device family.

Capture mode makes use of the 16-bit Timer resources, Timer1, Timer3 and Timer5. The timer resources for each CCP capture function are independent and are selected using the CCPTMRS0 and CCPTMRS1 registers. When an event occurs on the CCPx pin, the 16-bit CCPRxH:CCPRxL register pair captures and stores the 16-bit value of the TMRxH:TMRxL register pair, respectively. An event is defined as one of the following and is configured by the CCPxM<3:0> bits of the CCPxCON register:

- Every falling edge
- Every rising edge
- Every 4th rising edge
- Every 16th rising edge

When a capture is made, the corresponding Interrupt Request Flag bit CCPxIF of the PIR1, PIR2 or PIR4 register is set. The interrupt flag must be cleared in software. If another capture occurs before the value in the CCPRxH:CCPRxL register pair is read, the old captured value is overwritten by the new captured value.

Figure 14-1 shows a simplified diagram of the Capture operation.

FIGURE 14-1: CAPTURE MODE OPERATION BLOCK DIAGRAM

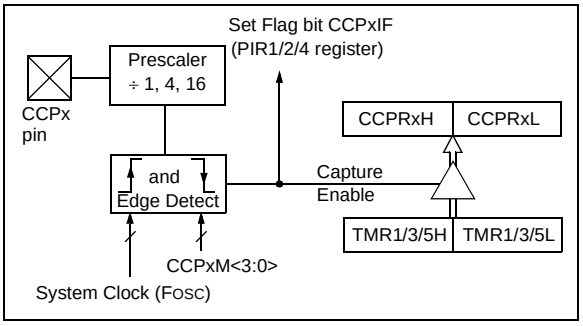

14.1.1 CCP PIN CONFIGURATION

In Capture mode, the CCPx pin should be configured as an input by setting the associated TRIS control bit.

Some CCPx outputs are multiplexed on a couple of pins. Table 14-2 shows the CCP output pin multiplexing. Selection of the output pin is determined by the CCPxMX bits in Configuration register 3H (CONFIG3H). Refer to Register 24-4 for more details.

> **Note:** If the CCPx pin is configured as an output, a write to the port can cause a capture condition.

TABLE 14-2: CCP PIN MULTIPLEXING

CCP OUTPUT	CONFIG 3H Control Bit	Bit Value	PIC18(L)F2XK22 I/O pin	PIC18(L)F4XK22 I/O pin
CCP2	CCP2MX	0	RB3	RB3
		1(*)	RC1	RC1
CCP3	CCP3MX	0(*)	RC6	RE0
		1	RB5	RB5

Legend: * = Default

14.1.2 TIMER1 MODE RESOURCE

The 16-bit Timer resource must be running in Timer mode or Synchronized Counter mode for the CCP module to use the capture feature. In Asynchronous Counter mode, the capture operation may not work.

See **Section 12.0 "Timer1/3/5 Module with Gate Control"** for more information on configuring the 16-bit Timers.

14.1.3 SOFTWARE INTERRUPT MODE

When the Capture mode is changed, a false capture interrupt may be generated. The user should keep the CCPxIE interrupt enable bit of the PIE1, PIE2 or PIE4 register clear to avoid false interrupts. Additionally, the user should clear the CCPxIF interrupt flag bit of the PIR1, PIR2 or PIR4 register following any change in Operating mode.

> **Note:** Clocking the 16-bit Timer resource from the system clock (FOSC) should not be used in Capture mode. In order for Capture mode to recognize the trigger event on the CCPx pin, the Timer resource must be clocked from the instruction clock (FOSC/4) or from an external clock source.

© 2010-2016 Microchip Technology Inc.

14.1.4 CCP PRESCALER

There are four prescaler settings specified by the CCPxM<3:0> bits of the CCPxCON register. Whenever the CCP module is turned off, or the CCP module is not in Capture mode, the prescaler counter is cleared. Any Reset will clear the prescaler counter.

Switching from one capture prescaler to another does not clear the prescaler and may generate a false interrupt. To avoid this unexpected operation, turn the module off by clearing the CCPxCON register before changing the prescaler. Example 14-1 demonstrates the code to perform this function.

EXAMPLE 14-1: CHANGING BETWEEN CAPTURE PRESCALERS

```
#define NEW_CAPT_PS 0x06    //Capture
                            // Prescale 4th
...                         // rising edge
CCPxCON = 0;                // Turn the CCP
                            // Module Off
CCPxCON = NEW_CAPT_PS;      // Turn CCP module
                            // on with new
                            // prescale value
```

14.1.5 CAPTURE DURING SLEEP

Capture mode requires a 16-bit TimerX module for use as a time base. There are four options for driving the 16-bit TimerX module in Capture mode. It can be driven by the system clock (FOSC), the instruction clock (FOSC/4), or by the external clock sources, the Secondary Oscillator (SOSC), or the TxCKI clock input. When the 16-bit TimerX resource is clocked by FOSC or FOSC/4, TimerX will not increment during Sleep. When the device wakes from Sleep, TimerX will continue from its previous state. Capture mode will operate during Sleep when the 16-bit TimerX resource is clocked by one of the external clock sources (SOSC or the TxCKI pin).

TABLE 14-3: REGISTERS ASSOCIATED WITH CAPTURE

Name	Bit 7	Bit 6	Bit 5	Bit 4	Bit 3	Bit 2	Bit 1	Bit 0	Register on Page
CCP1CON	P1M<1:0>		DC1B<1:0>		CCP1M<3:0>				198
CCP2CON	P2M<1:0>		DC2B<1:0>		CCP2M<3:0>				198
CCP3CON	P3M<1:0>		DC3B<1:0>		CCP3M<3:0>				198
CCP4CON	—	—	DC4B<1:0>		CCP4M<3:0>				198
CCP5CON	—	—	DC5B<1:0>		CCP5M<3:0>				198
CCPR1H	Capture/Compare/PWM Register 1 High Byte (MSB)								—
CCPR1L	Capture/Compare/PWM Register 1 Low Byte (LSB)								—
CCPR2H	Capture/Compare/PWM Register 2 High Byte (MSB)								—
CCPR2L	Capture/Compare/PWM Register 2 Low Byte (LSB)								—
CCPR3H	Capture/Compare/PWM Register 3 High Byte (MSB)								—
CCPR3L	Capture/Compare/PWM Register 3 Low Byte (LSB)								—
CCPR4H	Capture/Compare/PWM Register 4 High Byte (MSB)								—
CCPR4L	Capture/Compare/PWM Register 4 Low Byte (LSB)								—
CCPR5H	Capture/Compare/PWM Register 5 High Byte (MSB)								—
CCPR5L	Capture/Compare/PWM Register 5 Low Byte (LSB)								—
CCPTMRS0	C3TSEL<1:0>		—	C2TSEL<1:0>		—	C1TSEL<1:0>		201
CCPTMRS1	—	—	—	—	C5TSEL<1:0>		C4TSEL<1:0>		201
INTCON	GIE/GIEH	PEIE/GIEL	TMR0IE	INT0IE	RBIE	TMR0IF	INT0IF	RBIF	109
IPR1	—	ADIP	RC1IP	TX1IP	SSP1IP	CCP1IP	TMR2IP	TMR1IP	121
IPR2	OSCFIP	C1IP	C2IP	EEIP	BCL1IP	HLVDIP	TMR3IP	CCP2IP	122
IPR4	—	—	—	—	—	CCP5IP	CCP4IP	CCP3IP	124
PIE1	—	ADIE	RC1IE	TX1IE	SSP1IE	CCP1IE	TMR2IE	TMR1IE	117

Legend: — = Unimplemented location, read as '0'. Shaded bits are not used by Capture mode.

Note 1: These registers/bits are available on PIC18(L)F4XK22 devices.

TABLE 14-3: REGISTERS ASSOCIATED WITH CAPTURE (CONTINUED)

Name	Bit 7	Bit 6	Bit 5	Bit 4	Bit 3	Bit 2	Bit 1	Bit 0	Register on Page
PIE2	OSCFIE	C1IE	C2IE	EEIE	BCL1IE	HLVDIE	TMR3IE	CCP2IE	118
PIE4	—	—	—	—	—	CCP5IE	CCP4IE	CCP3IE	120
PIR1	—	ADIF	RC1IF	TX1IF	SSP1IF	CCP1IF	TMR2IF	TMR1IF	112
PIR2	OSCFIF	C1IF	C2IF	EEIF	BCL1IF	HLVDIF	TMR3IF	CCP2IF	113
PIR4	—	—	—	—	—	CCP5IF	CCP4IF	CCP3IF	115
PMD0	UART2MD	UART1MD	TMR6MD	TMR5MD	TMR4MD	TMR3MD	TMR2MD	TMR1MD	52
PMD1	MSSP2MD	MSSP1MD	—	CCP5MD	CCP4MD	CCP3MD	CCP2MD	CCP1MD	53
T1CON	TMR1CS<1:0>		T1CKPS<1:0>		T1SOSCEN	$\overline{\text{T1SYNC}}$	T1RD16	TMR1ON	166
T1GCON	TMR1GE	T1GPOL	T1GTM	T1GSPM	T1GGO/$\overline{\text{DONE}}$	T1GVAL	T1GSS<1:0>		167
T3CON	TMR3CS<1:0>		T3CKPS<1:0>		T3SOSCEN	$\overline{\text{T3SYNC}}$	T3RD16	TMR3ON	166
T3GCON	TMR3GE	T3GPOL	T3GTM	T3GSPM	T3GGO/$\overline{\text{DONE}}$	T3GVAL	T3GSS<1:0>		167
T5CON	TMR5CS<1:0>		T5CKPS<1:0>		T5SOSCEN	$\overline{\text{T5SYNC}}$	T5RD16	TMR5ON	166
T5GCON	TMR5GE	T5GPOL	T5GTM	T5GSPM	T5GGO/$\overline{\text{DONE}}$	T5GVAL	T5GSS<1:0>		167
TMR1H	Holding Register for the Most Significant Byte of the 16-bit TMR1 Register								—
TMR1L	Least Significant Byte of the 16-bit TMR1 Register								—
TMR3H	Holding Register for the Most Significant Byte of the 16-bit TMR3 Register								—
TMR3L	Least Significant Byte of the 16-bit TMR3 Register								—
TMR5H	Holding Register for the Most Significant Byte of the 16-bit TMR5 Register								—
TMR5L	Least Significant Byte of the 16-bit TMR5 Register								—
TRISA	TRISA7	TRISA6	TRISA5	TRISA4	TRISA3	TRISA2	TRISA1	TRISA0	151
TRISB	TRISB7	TRISB6	TRISB5	TRISB4	TRISB3	TRISB2	TRISB1	TRISB0	151
TRISC	TRISC7	TRISC6	TRISC5	TRISC4	TRISC3	TRISC2	TRISC1	TRISC0	151
TRISD(1)	TRISD7	TRISD6	TRISD5	TRISD4	TRISD3	TRISD2	TRISD1	TRISD0	151
TRISE	WPUE3	—	—	—	—	TRISE2(1)	TRISE1(1)	TRISE0(1)	151

Legend: — = Unimplemented location, read as '0'. Shaded bits are not used by Capture mode.
Note 1: These registers/bits are available on PIC18(L)F4XK22 devices.

TABLE 14-4: CONFIGURATION REGISTERS ASSOCIATED WITH CAPTURE

Name	Bit 7	Bit 6	Bit 5	Bit 4	Bit 3	Bit 2	Bit 1	Bit 0	Register on Page
CONFIG3H	MCLRE	—	P2BMX	T3CMX	HFOFST	CCP3MX	PBADEN	CCP2MX	348

Legend: — = Unimplemented location, read as '0'. Shaded bits are not used by Capture mode.

© 2010-2016 Microchip Technology Inc.

14.2 Compare Mode

The Compare mode function described in this section is identical for all CCP and ECCP modules available on this device family.

Compare mode makes use of the 16-bit TimerX resources, Timer1, Timer3 and Timer5. The 16-bit value of the CCPRxH:CCPRxL register pair is constantly compared against the 16-bit value of the TMRxH:TMRxL register pair. When a match occurs, one of the following events can occur:

- Toggle the CCPx output
- Set the CCPx output
- Clear the CCPx output
- Generate a Special Event Trigger
- Generate a Software Interrupt

The action on the pin is based on the value of the CCPxM<3:0> control bits of the CCPxCON register. At the same time, the interrupt flag CCPxIF bit is set.

All Compare modes can generate an interrupt.

Figure 14-2 shows a simplified diagram of the Compare operation.

FIGURE 14-2: COMPARE MODE OPERATION BLOCK DIAGRAM

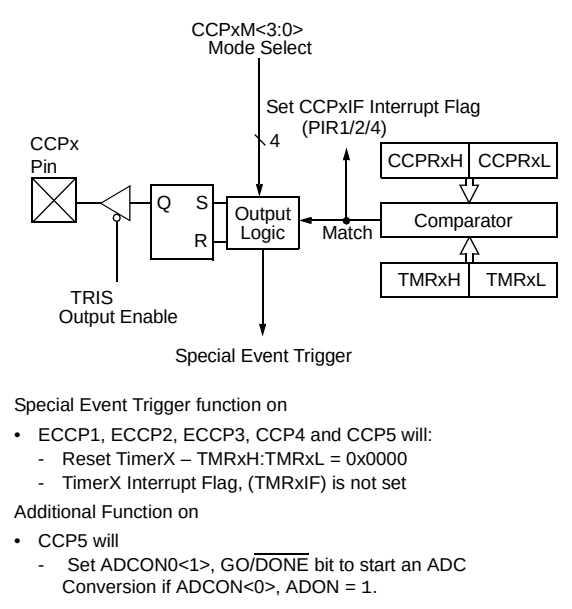

14.2.1 CCP PIN CONFIGURATION

The user must configure the CCPx pin as an output by clearing the associated TRIS bit.

Some CCPx outputs are multiplexed on a couple of pins. Table 14-2 shows the CCP output pin Multiplexing. Selection of the output pin is determined by the CCPxMX bits in Configuration register 3H (CONFIG3H). Refer to Register 24-4 for more details.

> **Note:** Clearing the CCPxCON register will force the CCPx compare output latch to the default low level. This is not the PORT I/O data latch.

14.2.2 TimerX MODE RESOURCE

In Compare mode, 16-bit TimerX resource must be running in either Timer mode or Synchronized Counter mode. The compare operation may not work in Asynchronous Counter mode.

See **Section 12.0 "Timer1/3/5 Module with Gate Control"** for more information on configuring the 16-bit TimerX resources.

> **Note:** Clocking TimerX from the system clock (FOSC) should not be used in Compare mode. In order for Compare mode to recognize the trigger event on the CCPx pin, TimerX must be clocked from the instruction clock (FOSC/4) or from an external clock source.

14.2.3 SOFTWARE INTERRUPT MODE

When Generate Software Interrupt mode is chosen (CCPxM<3:0> = `1010`), the CCPx module does not assert control of the CCPx pin (see the CCPxCON register).

14.2.4 SPECIAL EVENT TRIGGER

When Special Event Trigger mode is selected (CCPxM<3:0> = 1011), and a match of the TMRxH:TMRxL and the CCPRxH:CCPRxL registers occurs, all CCPx and ECCPx modules will immediately:

- Set the CCP interrupt flag bit – CCPxIF
- CCP5 will start an ADC conversion, if the ADC is enabled

On the next TimerX rising clock edge:

- A Reset of TimerX register pair occurs – TMRxH:TMRxL = 0x0000,

This Special Event Trigger mode does not:

- Assert control over the CCPx or ECCPx pins.
- Set the TMRxIF interrupt bit when the TMRxH:TMRxL register pair is reset. (TMRxIF gets set on a TimerX overflow.)

If the value of the CCPRxH:CCPRxL registers are modified when a match occurs, the user should be aware that the automatic reset of TimerX occurs on the next rising edge of the clock. Therefore, modifying the CCPRxH:CCPRxL registers before this reset occurs will allow the TimerX to continue without being reset, inadvertently resulting in the next event being advanced or delayed.

The Special Event Trigger mode allows the CCPRxH:CCPRxL register pair to effectively provide a 16-bit programmable period register for TimerX.

14.2.5 COMPARE DURING SLEEP

The Compare mode is dependent upon the system clock (FOSC) for proper operation. Since FOSC is shut down during Sleep mode, the Compare mode will not function properly during Sleep.

TABLE 14-5: REGISTERS ASSOCIATED WITH COMPARE

Name	Bit 7	Bit 6	Bit 5	Bit 4	Bit 3	Bit 2	Bit 1	Bit 0	Register on Page
CCP1CON	P1M<1:0>		DC1B<1:0>		CCP1M<3:0>				198
CCP2CON	P2M<1:0>		DC2B<1:0>		CCP2M<3:0>				198
CCP3CON	P3M<1:0>		DC3B<1:0>		CCP3M<3:0>				198
CCP4CON	—	—	DC4B<1:0>		CCP4M<3:0>				198
CCP5CON	—	—	DC5B<1:0>		CCP5M<3:0>				198
CCPR1H	Capture/Compare/PWM Register 1 High Byte (MSB)								—
CCPR1L	Capture/Compare/PWM Register 1 Low Byte (LSB)								—
CCPR2H	Capture/Compare/PWM Register 2 High Byte (MSB)								—
CCPR2L	Capture/Compare/PWM Register 2 Low Byte (LSB)								—
CCPR3H	Capture/Compare/PWM Register 3 High Byte (MSB)								—
CCPR3L	Capture/Compare/PWM Register 3 Low Byte (LSB)								—
CCPR4H	Capture/Compare/PWM Register 4 High Byte (MSB)								—
CCPR4L	Capture/Compare/PWM Register 4 Low Byte (LSB)								—
CCPR5H	Capture/Compare/PWM Register 5 High Byte (MSB)								—
CCPR5L	Capture/Compare/PWM Register 5 Low Byte (LSB)								—
CCPTMRS0	C3TSEL<1:0>		—	C2TSEL<1:0>		—	C1TSEL<1:0>		201
CCPTMRS1	—	—	—	—	C5TSEL<1:0>		C4TSEL<1:0>		201
INTCON	GIE/GIEH	PEIE/GIEL	TMR0IE	INT0IE	RBIE	TMR0IF	INT0IF	RBIF	109
IPR1	—	ADIP	RC1IP	TX1IP	SSP1IP	CCP1IP	TMR2IP	TMR1IP	121

Legend: — = Unimplemented location, read as '0'. Shaded bits are not used by Compare mode.

Note 1: These registers/bits are available on PIC18(L)F4XK22 devices.

© 2010-2016 Microchip Technology Inc.

TABLE 14-5: REGISTERS ASSOCIATED WITH COMPARE (CONTINUED)

Name	Bit 7	Bit 6	Bit 5	Bit 4	Bit 3	Bit 2	Bit 1	Bit 0	Register on Page
IPR2	OSCFIP	C1IP	C2IP	EEIP	BCL1IP	HLVDIP	TMR3IP	CCP2IP	122
IPR4	—	—	—	—	—	CCP5IP	CCP4IP	CCP3IP	124
PIE1	—	ADIE	RC1IE	TX1IE	SSP1IE	CCP1IE	TMR2IE	TMR1IE	117
PIE2	OSCFIE	C1IE	C2IE	EEIE	BCL1IE	HLVDIE	TMR3IE	CCP2IE	118
PIE4	—	—	—	—	—	CCP5IE	CCP4IE	CCP3IE	120
PIR1	—	ADIF	RC1IF	TX1IF	SSP1IF	CCP1IF	TMR2IF	TMR1IF	112
PIR2	OSCFIF	C1IF	C2IF	EEIF	BCL1IF	HLVDIF	TMR3IF	CCP2IF	113
PIR4	—	—	—	—	—	CCP5IF	CCP4IF	CCP3IF	115
PMD0	UART2MD	UART1MD	TMR6MD	TMR5MD	TMR4MD	TMR3MD	TMR2MD	TMR1MD	52
PMD1	MSSP2MD	MSSP1MD	—	CCP5MD	CCP4MD	CCP3MD	CCP2MD	CCP1MD	53
T1CON	TMR1CS<1:0>		T1CKPS<1:0>		T1SOSCEN	$\overline{\text{T1SYNC}}$	T1RD16	TMR1ON	166
T1GCON	TMR1GE	T1GPOL	T1GTM	T1GSPM	T1GGO/$\overline{\text{DONE}}$	T1GVAL	T1GSS<1:0>		167
T3CON	TMR3CS<1:0>		T3CKPS<1:0>		T3SOSCEN	$\overline{\text{T3SYNC}}$	T3RD16	TMR3ON	166
T3GCON	TMR3GE	T3GPOL	T3GTM	T3GSPM	T3GGO/$\overline{\text{DONE}}$	T3GVAL	T3GSS<1:0>		167
T5CON	TMR5CS<1:0>		T5CKPS<1:0>		T5SOSCEN	$\overline{\text{T5SYNC}}$	T5RD16	TMR5ON	166
T5GCON	TMR5GE	T5GPOL	T5GTM	T5GSPM	T5GGO/$\overline{\text{DONE}}$	T5GVAL	T5GSS<1:0>		167
TMR1H	Holding Register for the Most Significant Byte of the 16-bit TMR1 Register								—
TMR1L	Least Significant Byte of the 16-bit TMR1 Register								—
TMR3H	Holding Register for the Most Significant Byte of the 16-bit TMR3 Register								—
TMR3L	Least Significant Byte of the 16-bit TMR3 Register								—
TMR5H	Holding Register for the Most Significant Byte of the 16-bit TMR5 Register								—
TMR5L	Least Significant Byte of the 16-bit TMR5 Register								—
TRISA	TRISA7	TRISA6	TRISA5	TRISA4	TRISA3	TRISA2	TRISA1	TRISA0	151
TRISB	TRISB7	TRISB6	TRISB5	TRISB4	TRISB3	TRISB2	TRISB1	TRISB0	151
TRISC	TRISC7	TRISC6	TRISC5	TRISC4	TRISC3	TRISC2	TRISC1	TRISC0	151
TRISD(1)	TRISD7	TRISD6	TRISD5	TRISD4	TRISD3	TRISD2	TRISD1	TRISD0	151
TRISE	WPUE3	—	—	—	—	TRISE2(1)	TRISE1(1)	TRISE0(1)	151

Legend: — = Unimplemented location, read as '0'. Shaded bits are not used by Compare mode.

Note 1: These registers/bits are available on PIC18(L)F4XK22 devices.

TABLE 14-6: CONFIGURATION REGISTERS ASSOCIATED WITH COMPARE

Name	Bit 7	Bit 6	Bit 5	Bit 4	Bit 3	Bit 2	Bit 1	Bit 0	Register on Page
CONFIG3H	MCLRE	—	P2BMX	T3CMX	HFOFST	CCP3MX	PBADEN	CCP2MX	348

Legend: — = Unimplemented location, read as '0'. Shaded bits are not used by Compare mode.

14.3 PWM Overview

Pulse-Width Modulation (PWM) is a scheme that provides power to a load by switching quickly between fully on and fully off states. The PWM signal resembles a square wave where the high portion of the signal is considered the on state and the low portion of the signal is considered the off state. The high portion, also known as the pulse width, can vary in time and is defined in steps. A larger number of steps applied, which lengthens the pulse width, also supplies more power to the load. Lowering the number of steps applied, which shortens the pulse width, supplies less power. The PWM period is defined as the duration of one complete cycle or the total amount of on and off time combined.

PWM resolution defines the maximum number of steps that can be present in a single PWM period. A higher resolution allows for more precise control of the pulse width time and in turn the power that is applied to the load.

The term duty cycle describes the proportion of the on time to the off time and is expressed in percentages, where 0% is fully off and 100% is fully on. A lower duty cycle corresponds to less power applied and a higher duty cycle corresponds to more power applied.

Figure 14-3 shows a typical waveform of the PWM signal.

14.3.1 STANDARD PWM OPERATION

The standard PWM function described in this section is available and identical for CCP and ECCP modules.

The standard PWM mode generates a Pulse-Width modulation (PWM) signal on the CCPx pin with up to 10 bits of resolution. The period, duty cycle, and resolution are controlled by the following registers:

- PRx registers
- TxCON registers
- CCPRxL registers
- CCPxCON registers

Figure 14-4 shows a simplified block diagram of PWM operation.

> **Note 1:** The corresponding TRIS bit must be cleared to enable the PWM output on the CCPx pin.
>
> **2:** Clearing the CCPxCON register will relinquish control of the CCPx pin.

FIGURE 14-3: CCP PWM OUTPUT SIGNAL

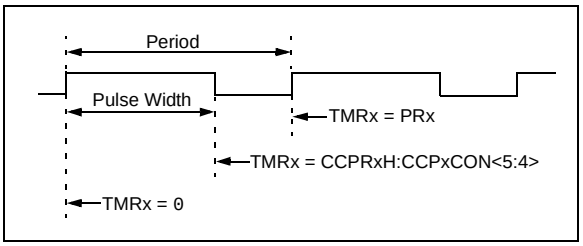

FIGURE 14-4: SIMPLIFIED PWM BLOCK DIAGRAM

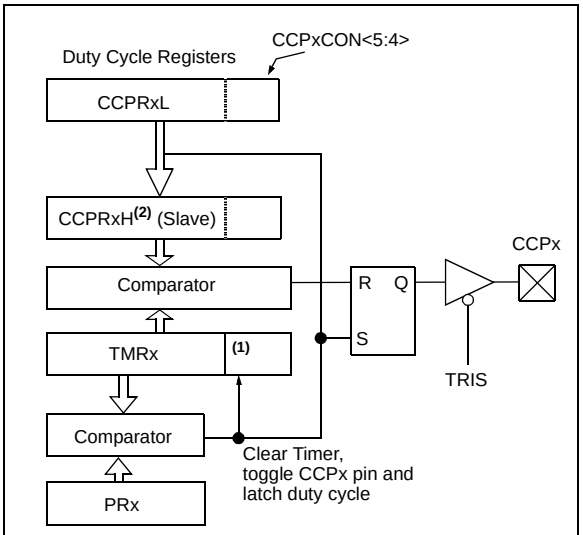

Note 1: The 8-bit timer TMRx register is concatenated with the 2-bit internal system clock (FOSC), or 2 bits of the prescaler, to create the 10-bit time base.

2: In PWM mode, CCPRxH is a read-only register.

14.3.2 SETUP FOR PWM OPERATION

The following steps should be taken when configuring the CCP module for standard PWM operation:

1. Disable the CCPx pin output driver by setting the associated TRIS bit.
2. Select the 8-bit TimerX resource, (Timer2, Timer4 or Timer6) to be used for PWM generation by setting the CxTSEL<1:0> bits in the CCPTMRSx register.(1)
3. Load the PRx register for the selected TimerX with the PWM period value.
4. Configure the CCP module for the PWM mode by loading the CCPxCON register with the appropriate values.
5. Load the CCPRxL register and the DCxB<1:0> bits of the CCPxCON register, with the PWM duty cycle value.

© 2010-2016 Microchip Technology Inc.

6. Configure and start the 8-bit TimerX resource:
   - Clear the TMRxIF interrupt flag bit of the PIR2 or PIR4 register. See Note 1 below.
   - Configure the TxCKPS bits of the TxCON register with the Timer prescale value.
   - Enable the Timer by setting the TMRxON bit of the TxCON register.
7. Enable PWM output pin:
   - Wait until the Timer overflows and the TMRxIF bit of the PIR2 or PIR4 register is set. See Note 1 below.
   - Enable the CCPx pin output driver by clearing the associated TRIS bit.

Note 1: In order to send a complete duty cycle and period on the first PWM output, the above steps must be included in the setup sequence. If it is not critical to start with a complete PWM signal on the first output, then step 6 may be ignored.

14.3.3 PWM TIMER RESOURCE

The PWM standard mode makes use of one of the 8-bit Timer2/4/6 timer resources to specify the PWM period.

Configuring the CxTSEL<1:0> bits in the CCPTMRS0 or CCPTMRS1 register selects which Timer2/4/6 timer is used.

14.3.4 PWM PERIOD

The PWM period is specified by the PRx register of 8-bit TimerX. The PWM period can be calculated using the formula of Equation 14-1.

EQUATION 14-1: PWM PERIOD

$$PWM\ Period = [(PRx) + 1] \bullet 4 \bullet T_{OSC} \bullet (TMRx\ Prescale\ Value)$$

Note 1: $T_{OSC} = 1/F_{OSC}$

When TMRx is equal to PRx, the following three events occur on the next increment cycle:

- TMRx is cleared
- The CCPx pin is set. (Exception: If the PWM duty cycle = 0%, the pin will not be set.)
- The PWM duty cycle is latched from CCPRxL into CCPRxH.

Note: The Timer postscaler (see **Section 13.0 "Timer2/4/6 Module"**) is not used in the determination of the PWM frequency.

14.3.5 PWM DUTY CYCLE

The PWM duty cycle is specified by writing a 10-bit value to multiple registers: CCPRxL register and DCxB<1:0> bits of the CCPxCON register. The CCPRxL contains the eight MSbs and the DCxB<1:0> bits of the CCPxCON register contain the two LSbs. CCPRxL and DCxB<1:0> bits of the CCPxCON register can be written to at any time. The duty cycle value is not latched into CCPRxH until after the period completes (i.e., a match between PRx and TMRx registers occurs). While using the PWM, the CCPRxH register is read-only.

Equation 14-2 is used to calculate the PWM pulse width.

Equation 14-3 is used to calculate the PWM duty cycle ratio.

EQUATION 14-2: PULSE WIDTH

$$Pulse\ Width = (CCPRxL{:}CCPxCON<5{:}4>) \bullet T_{OSC} \bullet (TMRx\ Prescale\ Value)$$

EQUATION 14-3: DUTY CYCLE RATIO

$$Duty\ Cycle\ Ratio = \frac{(CCPRxL{:}CCPxCON<5{:}4>)}{4(PRx + 1)}$$

The CCPRxH register and a 2-bit internal latch are used to double buffer the PWM duty cycle. This double buffering is essential for glitchless PWM operation.

The 8-bit timer TMRx register is concatenated with either the 2-bit internal system clock (F_{OSC}), or two bits of the prescaler, to create the 10-bit time base. The system clock is used if the TimerX prescaler is set to 1:1.

When the 10-bit time base matches the CCPRxH and 2-bit latch, then the CCPx pin is cleared (see Figure 14-4).

14.3.6 PWM RESOLUTION

The resolution determines the number of available duty cycles for a given period. For example, a 10-bit resolution will result in 1024 discrete duty cycles, whereas an 8-bit resolution will result in 256 discrete duty cycles.

The maximum PWM resolution is ten bits when PRx is 255. The resolution is a function of the PRx register value as shown by Equation 14-4.

EQUATION 14-4: PWM RESOLUTION

$$Resolution = \frac{log[4(PRx + 1)]}{log(2)} \ bits$$

Note: If the pulse width value is greater than the period the assigned PWM pin(s) will remain unchanged.

TABLE 14-7: EXAMPLE PWM FREQUENCIES AND RESOLUTIONS (Fosc = 32 MHz)

PWM Frequency	1.95 kHz	7.81 kHz	31.25 kHz	125 kHz	250 kHz	333.3 kHz
Timer Prescale (1, 4, 16)	16	4	1	1	1	1
PRx Value	0xFF	0xFF	0xFF	0x3F	0x1F	0x17
Maximum Resolution (bits)	10	10	10	8	7	6.6

TABLE 14-8: EXAMPLE PWM FREQUENCIES AND RESOLUTIONS (Fosc = 20 MHz)

PWM Frequency	1.22 kHz	4.88 kHz	19.53 kHz	78.12 kHz	156.3 kHz	208.3 kHz
Timer Prescale (1, 4, 16)	16	4	1	1	1	1
PRx Value	0xFF	0xFF	0xFF	0x3F	0x1F	0x17
Maximum Resolution (bits)	10	10	10	8	7	6.6

TABLE 14-9: EXAMPLE PWM FREQUENCIES AND RESOLUTIONS (Fosc = 8 MHz)

PWM Frequency	1.22 kHz	4.90 kHz	19.61 kHz	76.92 kHz	153.85 kHz	200.0 kHz
Timer Prescale (1, 4, 16)	16	4	1	1	1	1
PRx Value	0x65	0x65	0x65	0x19	0x0C	0x09
Maximum Resolution (bits)	8	8	8	6	5	5

14.3.7 OPERATION IN SLEEP MODE

In Sleep mode, the TMRx register will not increment and the state of the module will not change. If the CCPx pin is driving a value, it will continue to drive that value. When the device wakes up, TMRx will continue from its previous state.

14.3.8 CHANGES IN SYSTEM CLOCK FREQUENCY

The PWM frequency is derived from the system clock frequency. Any changes in the system clock frequency will result in changes to the PWM frequency. See **Section 2.0 "Oscillator Module (With Fail-Safe Clock Monitor)"** for additional details.

14.3.9 EFFECTS OF RESET

Any Reset will force all ports to Input mode and the CCP registers to their Reset states.

© 2010-2016 Microchip Technology Inc.

TABLE 14-10: REGISTERS ASSOCIATED WITH STANDARD PWM

Name	Bit 7	Bit 6	Bit 5	Bit 4	Bit 3	Bit 2	Bit 1	Bit 0	Register on Page
CCP1CON	P1M<1:0>		DC1B<1:0>		CCP1M<3:0>				198
CCP2CON	P2M<1:0>		DC2B<1:0>		CCP2M<3:0>				198
CCP3CON	P3M<1:0>		DC3B<1:0>		CCP3M<3:0>				198
CCP4CON	—	—	DC4B<1:0>		CCP4M<3:0>				198
CCP5CON	—	—	DC5B<1:0>		CCP5M<3:0>				198
CCPTMRS0	C3TSEL<1:0>		—	C2TSEL<1:0>		—	C1TSEL<1:0>		201
CCPTMRS1	—	—	—	—	C5TSEL<1:0>		C4TSEL<1:0>		201
INTCON	GIE/GIEH	PEIE/GIEL	TMR0IE	INT0IE	RBIE	TMR0IF	INT0IF	RBIF	109
IPR1	—	ADIP	RC1IP	TX1IP	SSP1IP	CCP1IP	TMR2IP	TMR1IP	121
IPR2	OSCFIP	C1IP	C2IP	EEIP	BCL1IP	HLVDIP	TMR3IP	CCP2IP	122
IPR4	—	—	—	—	—	CCP5IP	CCP4IP	CCP3IP	124
PIE1	—	ADIE	RC1IE	TX1IE	SSP1IE	CCP1IE	TMR2IE	TMR1IE	117
PIE2	OSCFIE	C1IE	C2IE	EEIE	BCL1IE	HLVDIE	TMR3IE	CCP2IE	118
PIE4	—	—	—	—	—	CCP5IE	CCP4IE	CCP3IE	120
PIR1	—	ADIF	RC1IF	TX1IF	SSP1IF	CCP1IF	TMR2IF	TMR1IF	112
PIR2	OSCFIF	C1IF	C2IF	EEIF	BCL1IF	HLVDIF	TMR3IF	CCP2IF	113
PIR4	—	—	—	—	—	CCP5IF	CCP4IF	CCP3IF	115
PMD0	UART2MD	UART1MD	TMR6MD	TMR5MD	TMR4MD	TMR3MD	TMR2MD	TMR1MD	52
PMD1	MSSP2MD	MSSP1MD	—	CCP5MD	CCP4MD	CCP3MD	CCP2MD	CCP1MD	53
PR2	Timer2 Period Register								—
PR4	Timer4 Period Register								—
PR6	Timer6 Period Register								—
T2CON	—	T2OUTPS<3:0>				TMR2ON	T2CKPS<1:0>		166
T4CON	—	T4OUTPS<3:0>				TMR4ON	T4CKPS<1:0>		166
T6CON	—	T6OUTPS<3:0>				TMR6ON	T6CKPS<1:0>		166
TMR2	Timer2 Register								—
TMR4	Timer4 Register								—
TMR6	Timer6 Register								—
TRISB	TRISB7	TRISB6	TRISB5	TRISB4	TRISB3	TRISB2	TRISB1	TRISB0	151
TRISC	TRISC7	TRISC6	TRISC5	TRISC4	TRISC3	TRISC2	TRISC1	TRISC0	151
TRISD(1)	TRISD7	TRISD6	TRISD5	TRISD4	TRISD3	TRISD2	TRISD1	TRISD0	151
TRISE	WPUE3	—	—	—	—	TRISE2(1)	TRISE1(1)	TRISE0(1)	151

Legend: — = Unimplemented location, read as '0'. Shaded bits are not used by Standard PWM mode.
Note 1: These registers/bits are available on PIC18(L)F4XK22 devices.

TABLE 14-11: CONFIGURATION REGISTERS ASSOCIATED WITH STANDARD PWM

Name	Bit 7	Bit 6	Bit 5	Bit 4	Bit 3	Bit 2	Bit 1	Bit 0	Register on Page
CONFIG3H	MCLRE	—	P2BMX	T3CMX	HFOFST	CCP3MX	PBADEN	CCP2MX	348

Legend: — = Unimplemented location, read as '0'. Shaded bits are not used by Standard PWM mode.

14.4 PWM (Enhanced Mode)

The enhanced PWM function described in this section is available for CCP modules ECCP1, ECCP2 and ECCP3, with any differences between modules noted.

The enhanced PWM mode generates a Pulse-Width Modulation (PWM) signal on up to four different output pins with up to ten bits of resolution. The period, duty cycle, and resolution are controlled by the following registers:

- PRx registers
- TxCON registers
- CCPRxL registers
- CCPxCON registers

The ECCP modules have the following additional PWM registers which control Auto-shutdown, Auto-restart, Dead-band Delay and PWM Steering modes:

- ECCPxAS registers
- PSTRxCON registers
- PWMxCON registers

The enhanced PWM module can generate the following five PWM Output modes:

- Single PWM
- Half-Bridge PWM
- Full-Bridge PWM, Forward mode
- Full-Bridge PWM, Reverse mode
- Single PWM with PWM Steering mode

To select an Enhanced PWM Output mode, the PxM<1:0> bits of the CCPxCON register must be configured appropriately.

The PWM outputs are multiplexed with I/O pins and are designated PxA, PxB, PxC and PxD. The polarity of the PWM pins is configurable and is selected by setting the CCPxM bits in the CCPxCON register appropriately.

Figure 14-5 shows an example of a simplified block diagram of the Enhanced PWM module.

Table 14-12 shows the pin assignments for various Enhanced PWM modes.

Note 1: The corresponding TRIS bit must be cleared to enable the PWM output on the CCPx pin.

2: Clearing the CCPxCON register will relinquish control of the CCPx pin.

3: Any pin not used in the enhanced PWM mode is available for alternate pin functions, if applicable.

4: To prevent the generation of an incomplete waveform when the PWM is first enabled, the ECCP module waits until the start of a new PWM period before generating a PWM signal.

FIGURE 14-5: EXAMPLE SIMPLIFIED BLOCK DIAGRAM OF THE ENHANCED PWM MODE

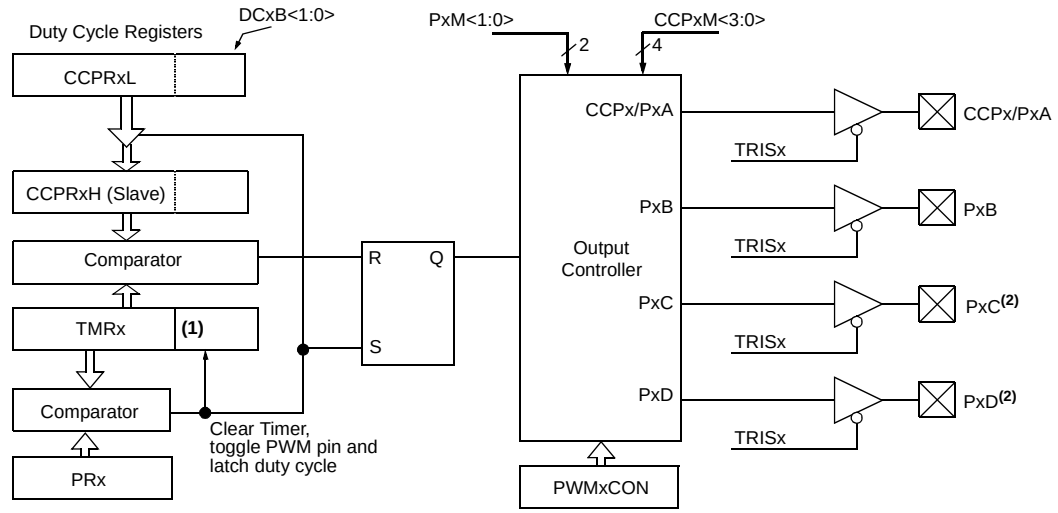

Note 1: The 8-bit timer TMRx register is concatenated with the 2-bit internal Q clock, or 2 bits of the prescaler to create the 10-bit time base.

2: PxC and PxD are not available on half-bridge ECCP modules.

© 2010-2016 Microchip Technology Inc.

TABLE 14-12: EXAMPLE PIN ASSIGNMENTS FOR VARIOUS PWM ENHANCED MODES

ECCP Mode	PxM<1:0>	CCPx/PxA	PxB	PxC	PxD
Single	00	Yes(1)	Yes(1)	Yes(1)	Yes(1)
Half-Bridge	10	Yes	Yes	No	No
Full-Bridge, Forward	01	Yes	Yes	Yes	Yes
Full-Bridge, Reverse	11	Yes	Yes	Yes	Yes

Note 1: PWM Steering enables outputs in Single mode.

FIGURE 14-6: EXAMPLE PWM (ENHANCED MODE) OUTPUT RELATIONSHIPS (ACTIVE-HIGH STATE)

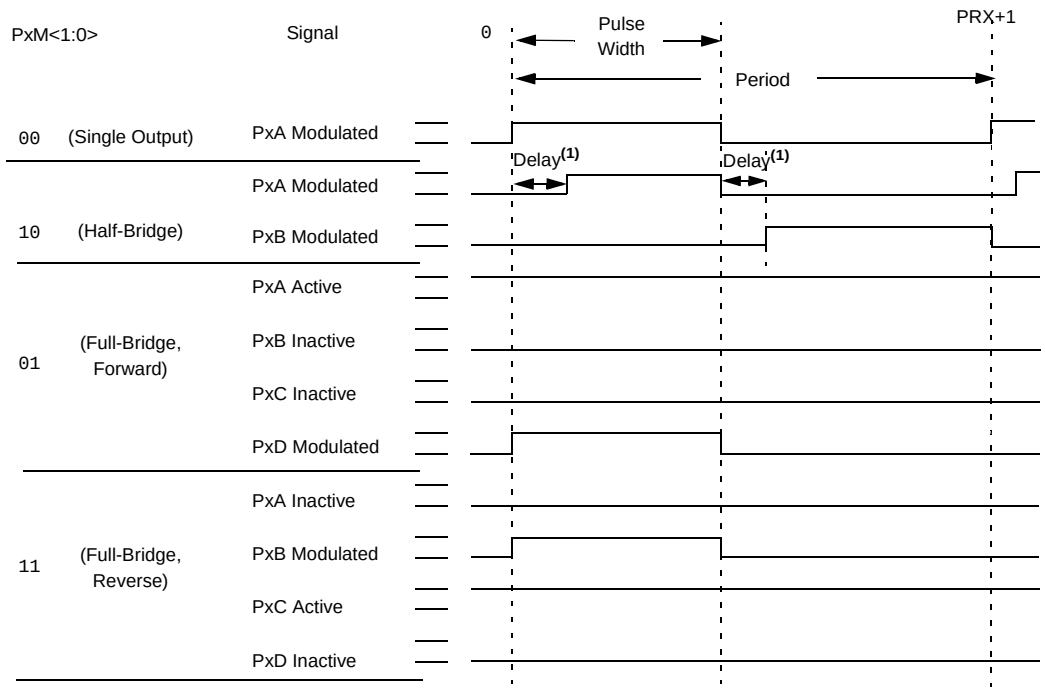

Relationships:

- Period = 4 * Tosc * (PRx + 1) * (TMRx Prescale Value)
- Pulse Width = Tosc * (CCPRxL<7:0>:CCPxCON<5:4>) * (TMRx Prescale Value)
- Delay = 4 * Tosc * (PWMxCON<6:0>)

Note 1: Dead-band delay is programmed using the PWMxCON register (**Section 14.4.5 "Programmable Dead-Band Delay Mode"**).

FIGURE 14-7: EXAMPLE ENHANCED PWM OUTPUT RELATIONSHIPS (ACTIVE-LOW STATE)

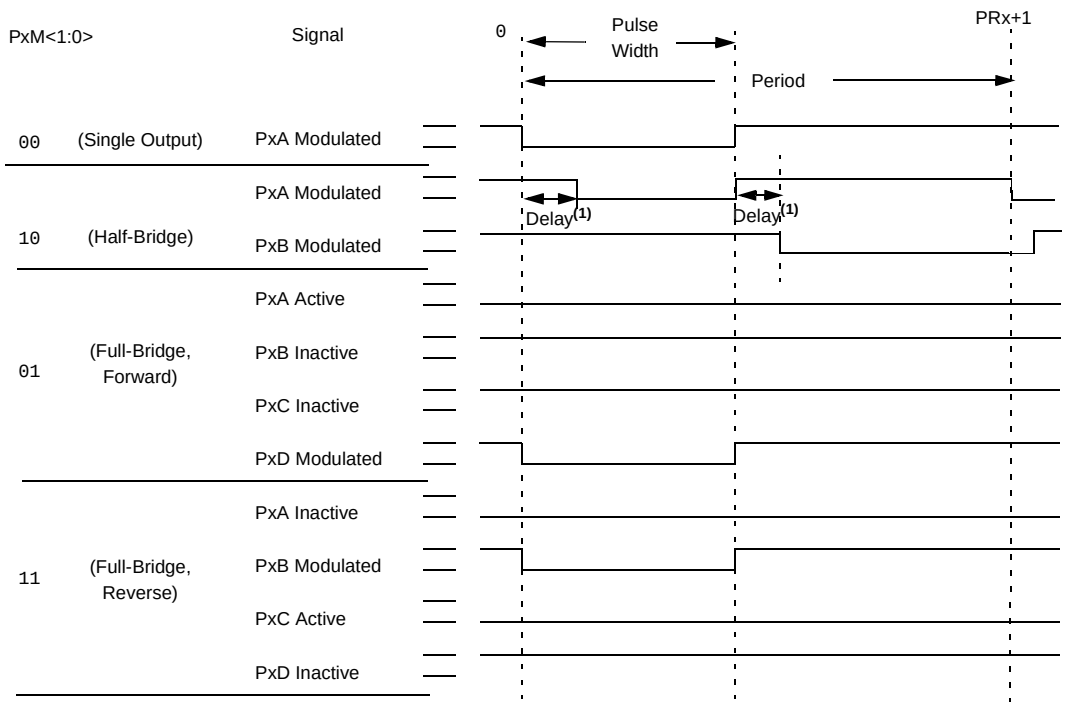

Relationships:

- Period = 4 * Tosc * (PRx + 1) * (TMRx Prescale Value)
- Pulse Width = Tosc * (CCPRxL<7:0>:CCPxCON<5:4>) * (TMRx Prescale Value)
- Delay = 4 * Tosc * (PWMxCON<6:0>)

Note 1: Dead-band delay is programmed using the PWMxCON register (**Section 14.4.5 "Programmable Dead-Band Delay Mode"**).

© 2010-2016 Microchip Technology Inc.

14.4.1 HALF-BRIDGE MODE

In Half-Bridge mode, two pins are used as outputs to drive push-pull loads. The PWM output signal is output on the CCPx/PxA pin, while the complementary PWM output signal is output on the PxB pin (see Figure 14-9). This mode can be used for half-bridge applications, as shown in Figure 14-9, or for full-bridge applications, where four power switches are being modulated with two PWM signals.

In Half-Bridge mode, the programmable dead-band delay can be used to prevent shoot-through current in half-bridge power devices. The value of the PDC<6:0> bits of the PWMxCON register sets the number of instruction cycles before the output is driven active. If the value is greater than the duty cycle, the corresponding output remains inactive during the entire cycle. See **Section 14.4.5 "Programmable Dead-Band Delay Mode"** for more details of the dead-band delay operations.

Since the PxA and PxB outputs are multiplexed with the PORT data latches, the associated TRIS bits must be cleared to configure PxA and PxB as outputs.

FIGURE 14-8: EXAMPLE OF HALF-BRIDGE PWM OUTPUT

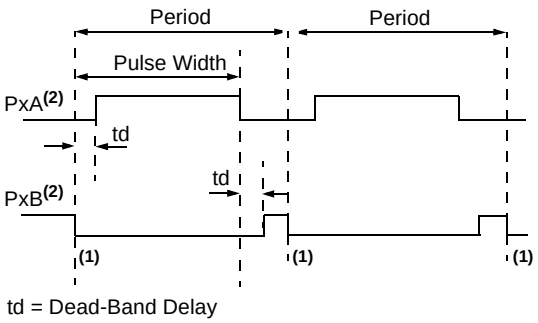

Note 1: At this time, the TMRx register is equal to the PRx register.

2: Output signals are shown as active-high.

FIGURE 14-9: EXAMPLE OF HALF-BRIDGE APPLICATIONS

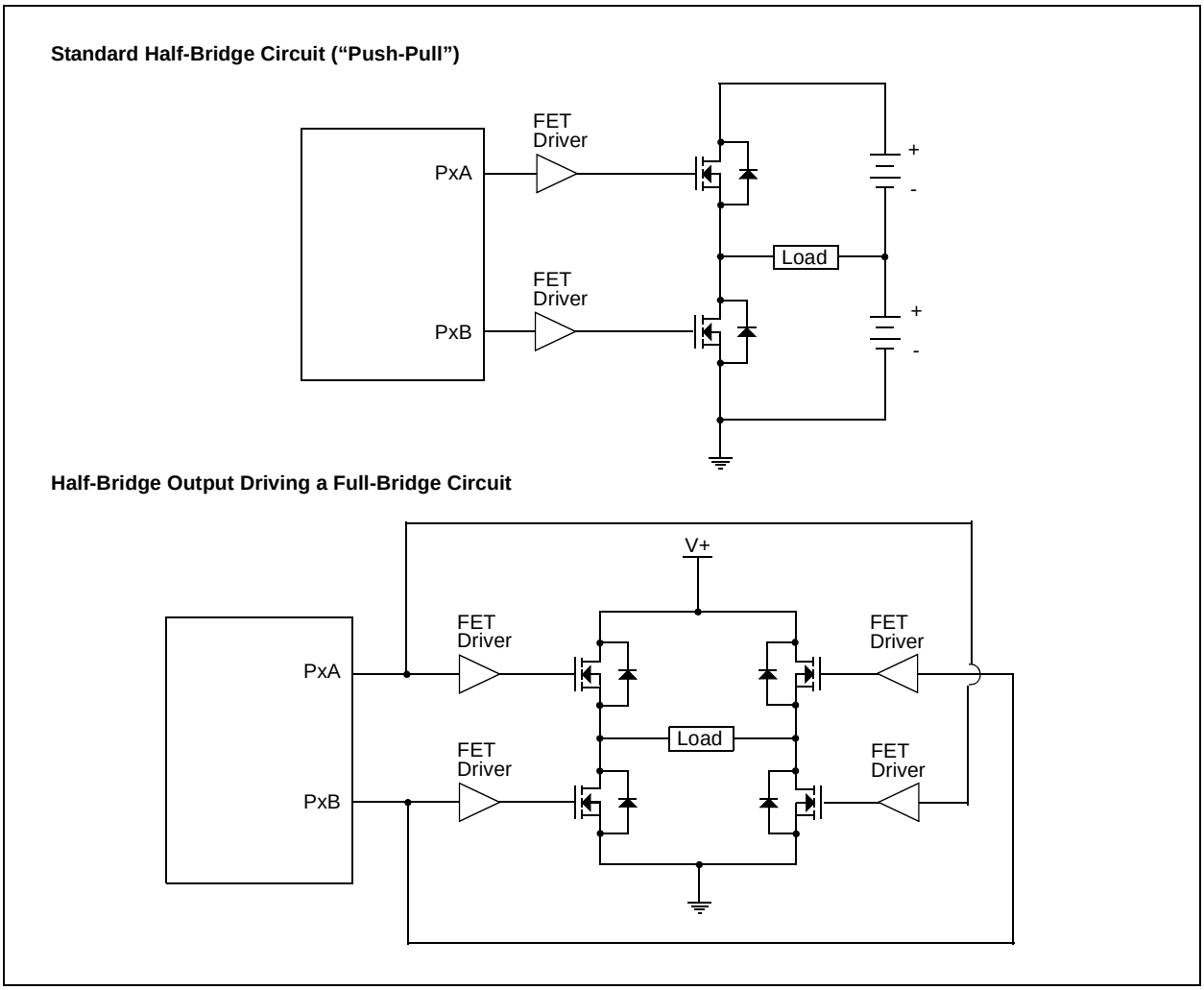

14.4.2 FULL-BRIDGE MODE

In Full-Bridge mode, all four pins are used as outputs. An example of full-bridge application is shown in Figure 14-10.

In the Forward mode, pin CCPx/PxA is driven to its active state, pin PxD is modulated, while PxB and PxC will be driven to their inactive state as shown in Figure 14-11.

In the Reverse mode, PxC is driven to its active state, pin PxB is modulated, while PxA and PxD will be driven to their inactive state as shown Figure 14-11.

PxA, PxB, PxC and PxD outputs are multiplexed with the PORT data latches. The associated TRIS bits must be cleared to configure the PxA, PxB, PxC and PxD pins as outputs.

FIGURE 14-10: EXAMPLE OF FULL-BRIDGE APPLICATION

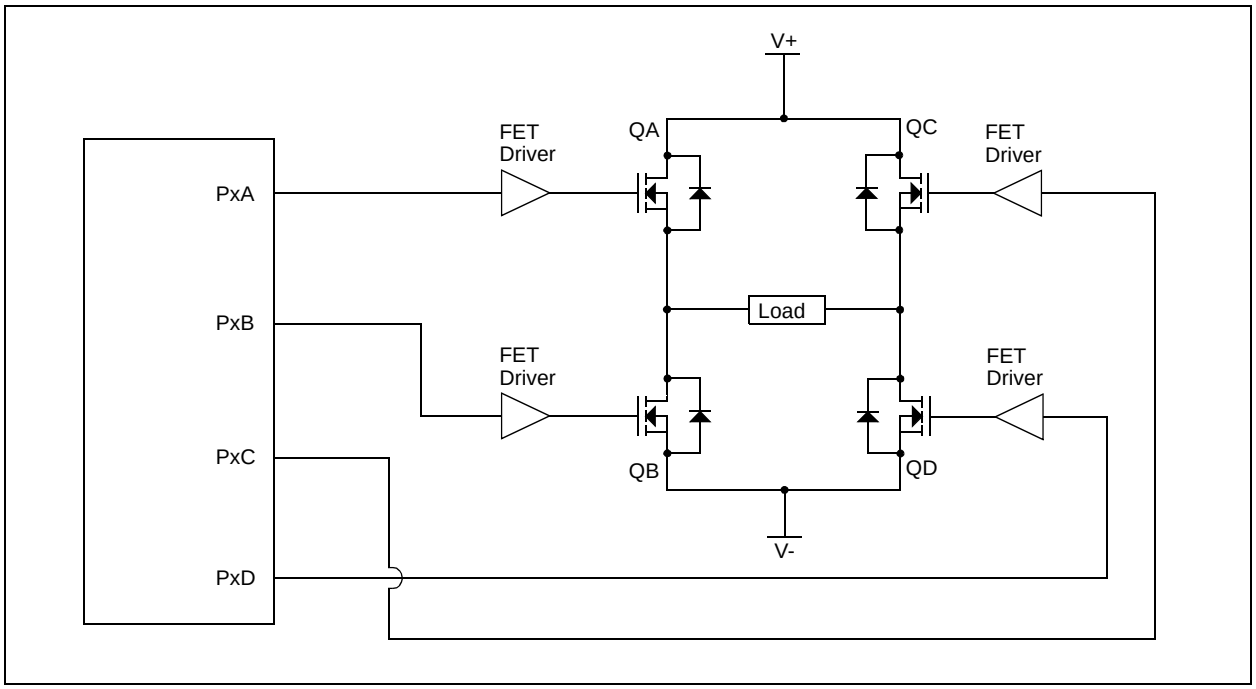

© 2010-2016 Microchip Technology Inc.

FIGURE 14-11: EXAMPLE OF FULL-BRIDGE PWM OUTPUT

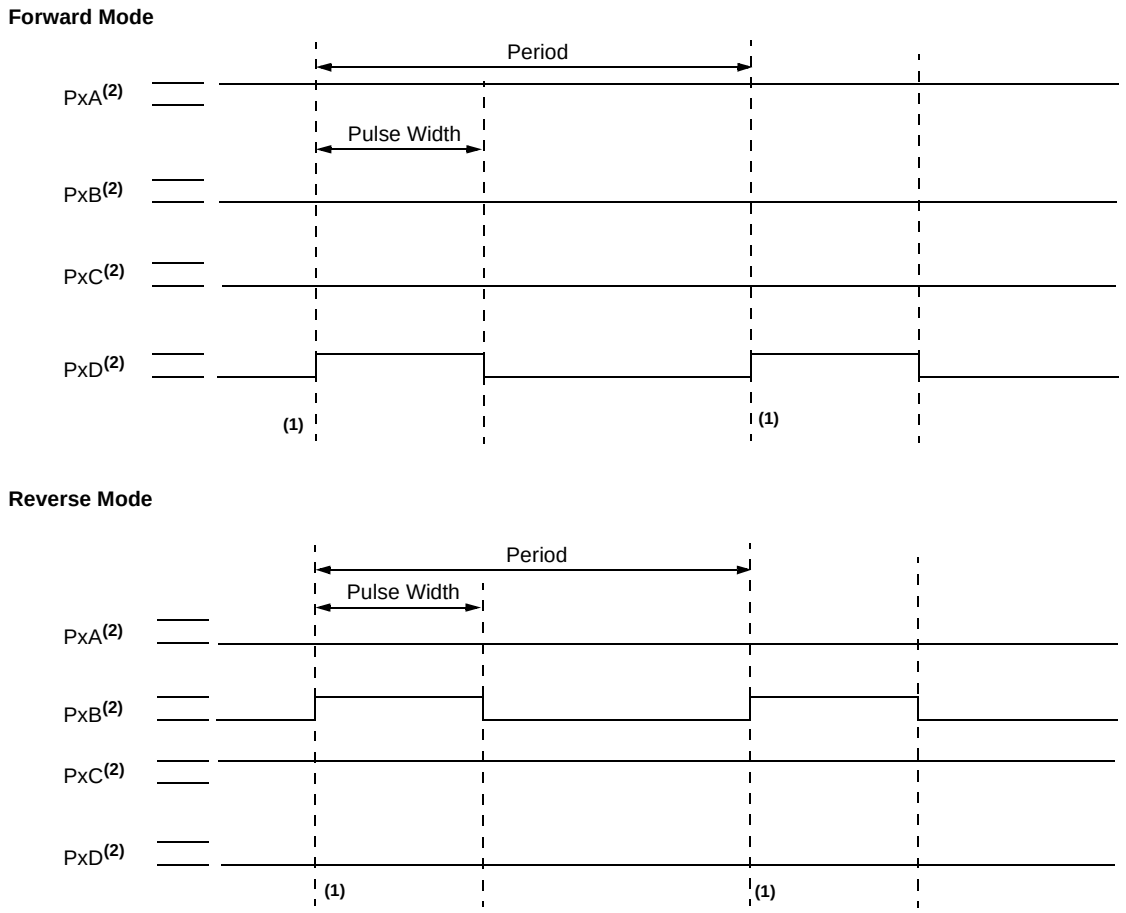

Note 1: At this time, the TMRx register is equal to the PRx register.

2: Output signal is shown as active-high.

14.4.2.1 Direction Change in Full-Bridge Mode

In the Full-Bridge mode, the PxM1 bit in the CCPxCON register allows users to control the forward/reverse direction. When the application firmware changes this direction control bit, the module will change to the new direction on the next PWM cycle.

A direction change is initiated in software by changing the PxM1 bit of the CCPxCON register. The following sequence occurs four Timer cycles prior to the end of the current PWM period:

- The modulated outputs (PxB and PxD) are placed in their inactive state.
- The associated unmodulated outputs (PxA and PxC) are switched to drive in the opposite direction.
- PWM modulation resumes at the beginning of the next period.

See Figure 14-12 for an illustration of this sequence.

The Full-Bridge mode does not provide dead-band delay. As one output is modulated at a time, dead-band delay is generally not required. There is a situation where dead-band delay is required.

This situation occurs when both of the following conditions are true:

1. The direction of the PWM output changes when the duty cycle of the output is at or near 100%.
2. The turn off time of the power switch, including the power device and driver circuit, is greater than the turn on time.

Figure 14-13 shows an example of the PWM direction changing from forward to reverse, at a near 100% duty cycle. In this example, at time t1, the output PxA and PxD become inactive, while output PxC becomes active. Since the turn off time of the power devices is longer than the turn on time, a shoot-through current will flow through power devices QC and QD (see Figure 14-10) for the duration of ‘t’. The same phenomenon will occur to power devices QA and QB for PWM direction change from reverse to forward.

If changing PWM direction at high duty cycle is required for an application, two possible solutions for eliminating the shoot-through current are:

1. Reduce PWM duty cycle for one PWM period before changing directions.
2. Use switch drivers that can drive the switches off faster than they can drive them on.

Other options to prevent shoot-through current may exist.

FIGURE 14-12: EXAMPLE OF PWM DIRECTION CHANGE

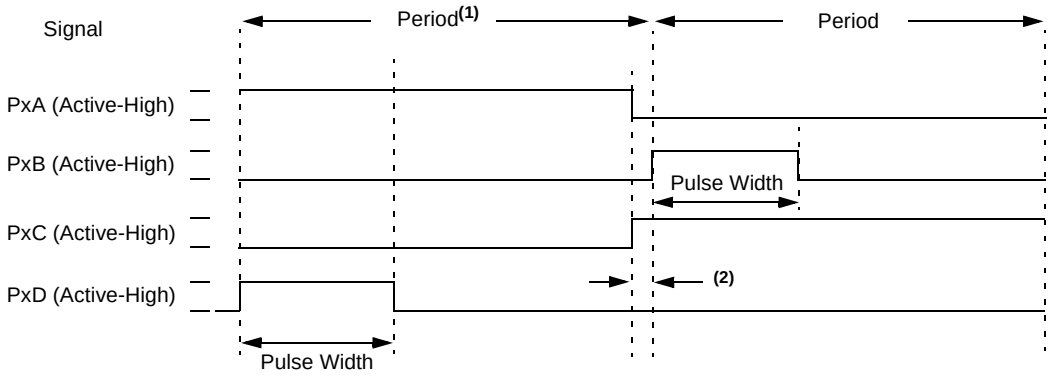

Note 1: The direction bit PxM1 of the CCPxCON register is written any time during the PWM cycle.

2: When changing directions, the PxA and PxC signals switch before the end of the current PWM cycle. The modulated PxB and PxD signals are inactive at this time. The length of this time is (TimerX Prescale)/FOSC, where TimerX is Timer2, Timer4 or Timer6.

© 2010-2016 Microchip Technology Inc.

FIGURE 14-13: EXAMPLE OF PWM DIRECTION CHANGE AT NEAR 100% DUTY CYCLE

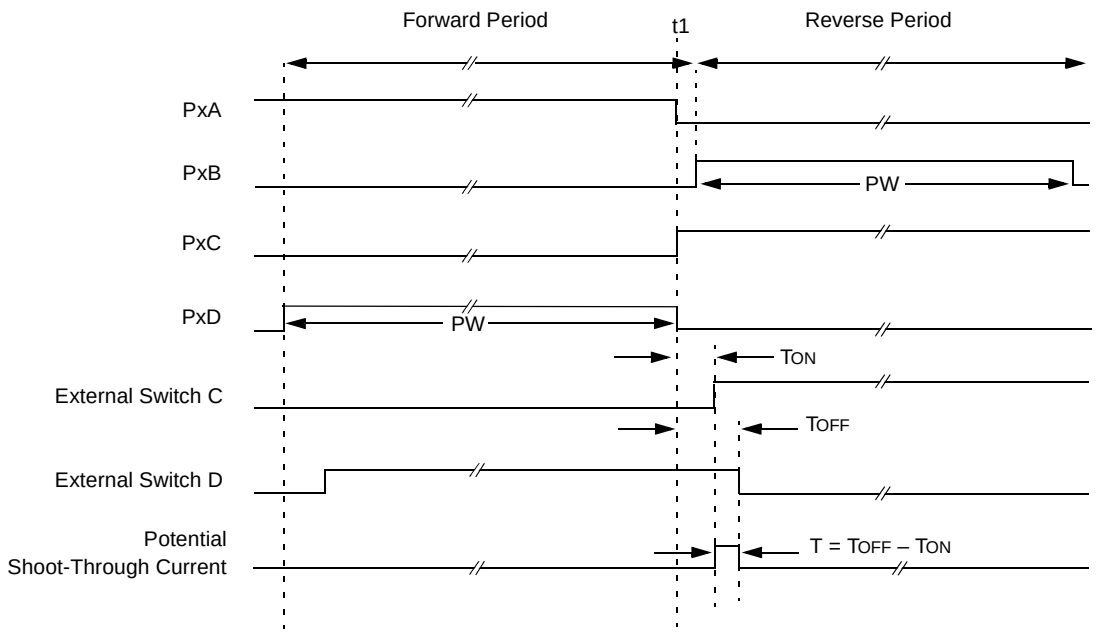

Note 1: All signals are shown as active-high.

2: TON is the turn-on delay of power switch QC and its driver.

3: TOFF is the turn-off delay of power switch QD and its driver.

14.4.3 ENHANCED PWM AUTO-SHUTDOWN MODE

The PWM mode supports an Auto-Shutdown mode that will disable the PWM outputs when an external shutdown event occurs. Auto-Shutdown mode places the PWM output pins into a predetermined state. This mode is used to help prevent the PWM from damaging the application.

The auto-shutdown sources are selected using the CCPxAS<2:0> bits of the ECCPxAS register. A shutdown event may be generated by:

- A logic ‘0’ on the INT pin
- Comparator Cx (async_CxOUT)
- Setting the CCPxASE bit in firmware

A shutdown condition is indicated by the CCPxASE (Auto-Shutdown Event Status) bit of the ECCPxAS register. If the bit is a ‘0’, the PWM pins are operating normally. If the bit is a ‘1’, the PWM outputs are in the shutdown state.

When a shutdown event occurs, two things happen:

The CCPxASE bit is set to ‘1’. The CCPxASE will remain set until cleared in firmware or an auto-restart occurs (see **Section 14.4.4 “Auto-Restart Mode”**).

The enabled PWM pins are asynchronously placed in their shutdown states. The PWM output pins are grouped into pairs [PxA/PxC] and [PxB/PxD].

The state of each pin pair is determined by the PSSxAC<1:0> and PSSxBD<1:0> bits of the ECCPxAS register. Each pin pair may be placed into one of three states:

- Drive logic ‘1’
- Drive logic ‘0’
- Tri-state (high-impedance)

Note 1: The auto-shutdown condition is a level-based signal, not an edge-based signal. As long as the level is present, the auto-shutdown will persist.

2: Writing to the CCPxASE bit is disabled while an auto-shutdown condition persists.

3: Once the auto-shutdown condition has been removed and the PWM restarted (either through firmware or auto-restart), the PWM signal will always restart at the beginning of the next PWM period.

FIGURE 14-14: PWM AUTO-SHUTDOWN WITH FIRMWARE RESTART (PXRSEN = 0)

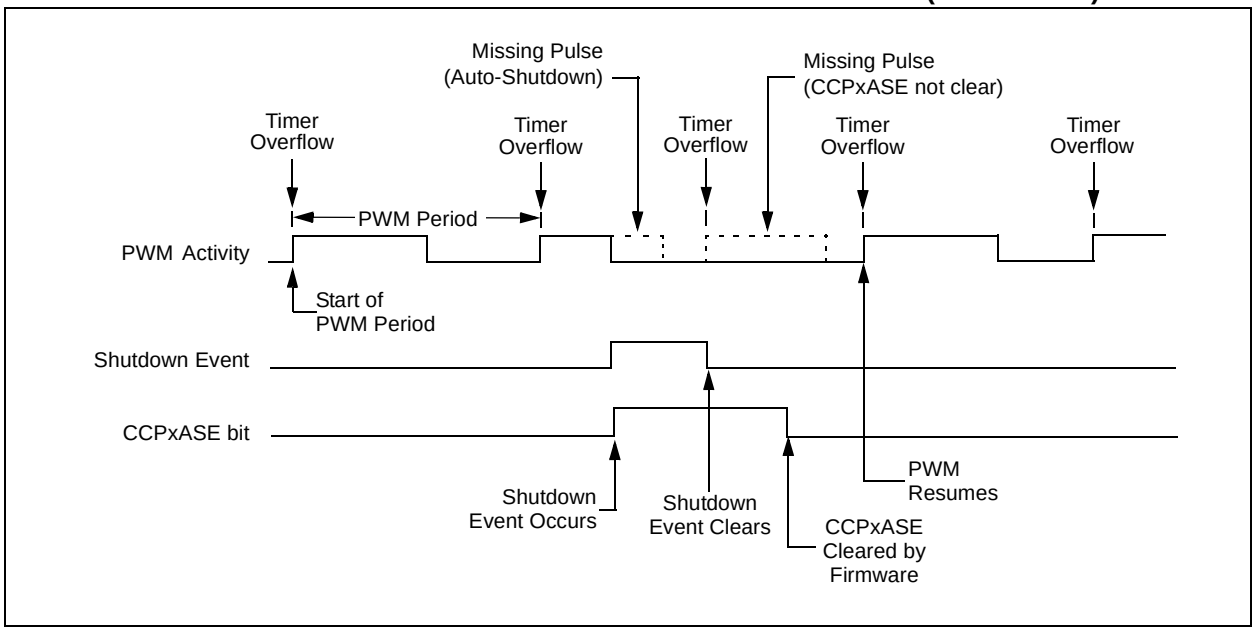

14.4.4 AUTO-RESTART MODE

The Enhanced PWM can be configured to automatically restart the PWM signal once the auto-shutdown condition has been removed. Auto-restart is enabled by setting the PxRSEN bit in the PWMxCON register.

If auto-restart is enabled, the CCPxASE bit will remain set as long as the auto-shutdown condition is active. When the auto-shutdown condition is removed, the CCPxASE bit will be cleared via hardware and normal operation will resume.

FIGURE 14-15: PWM AUTO-SHUTDOWN WITH AUTO-RESTART (PXRSEN = 1)

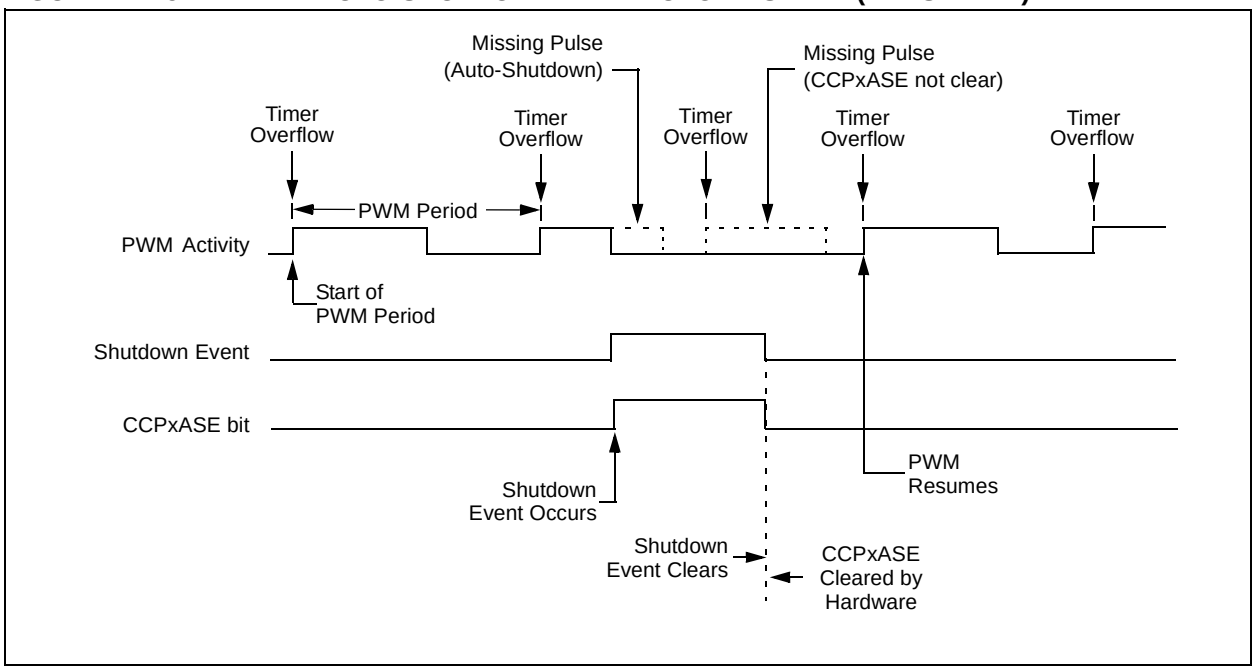

© 2010-2016 Microchip Technology Inc.

14.4.5 PROGRAMMABLE DEAD-BAND DELAY MODE

In half-bridge applications where all power switches are modulated at the PWM frequency, the power switches normally require more time to turn off than to turn on. If both the upper and lower power switches are switched at the same time (one turned on, and the other turned off), both switches may be on for a short period of time until one switch completely turns off. During this brief interval, a very high current (*shoot-through current*) will flow through both power switches, shorting the bridge supply. To avoid this potentially destructive shoot-through current from flowing during switching, turning on either of the power switches is normally delayed to allow the other switch to completely turn off.

In Half-Bridge mode, a digitally programmable dead-band delay is available to avoid shoot-through current from destroying the bridge power switches. The delay occurs at the signal transition from the non-active state to the active state. See Figure 14-16 for illustration. The lower seven bits of the associated PWMxCON register (Register 14-6) sets the delay period in terms of microcontroller instruction cycles (TCY or 4 TOSC).

FIGURE 14-16: EXAMPLE OF HALF-BRIDGE PWM OUTPUT

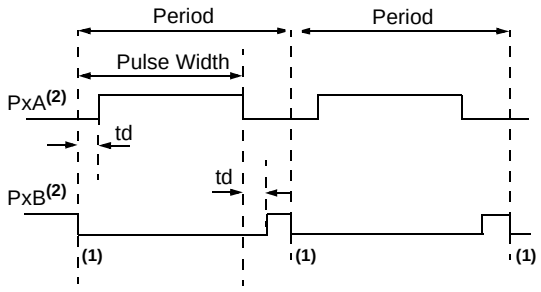

td = Dead-Band Delay

Note 1: At this time, the TMRx register is equal to the PRx register.

2: Output signals are shown as active-high.

FIGURE 14-17: EXAMPLE OF HALF-BRIDGE APPLICATIONS

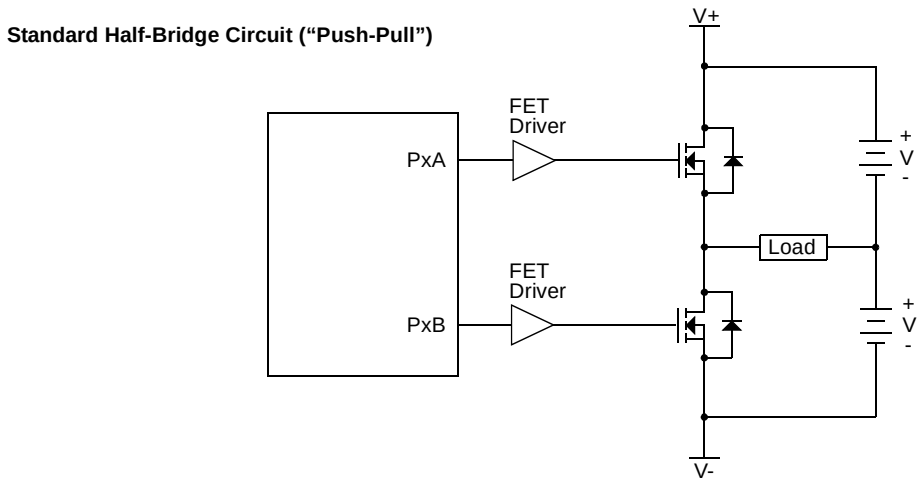

14.4.6 PWM STEERING MODE

In Single Output mode, PWM steering allows any of the PWM pins to be the modulated signal. Additionally, the same PWM signal can be simultaneously available on multiple pins.

Once the Single Output mode is selected (CCPxM<3:2> = 11 and PxM<1:0> = 00 of the CCPxCON register), the user firmware can bring out the same PWM signal to one, two, three or four output pins by setting the appropriate Steering Enable bits (STRxA, STRxB, STRxC and/or STRxD) of the PSTRxCON register, as shown in Table 14-13.

Note:	The associated TRIS bits must be set to output ('0') to enable the pin output driver in order to see the PWM signal on the pin.

While the PWM Steering mode is active, CCPxM<1:0> bits of the CCPxCON register select the PWM output polarity for the PxD, PxC, PxB and PxA pins.

The PWM auto-shutdown operation also applies to PWM Steering mode as described in **Section 14.4.3 "Enhanced PWM Auto-shutdown Mode"**. An auto-shutdown event will only affect pins that have PWM outputs enabled.

FIGURE 14-18: SIMPLIFIED STEERING BLOCK DIAGRAM

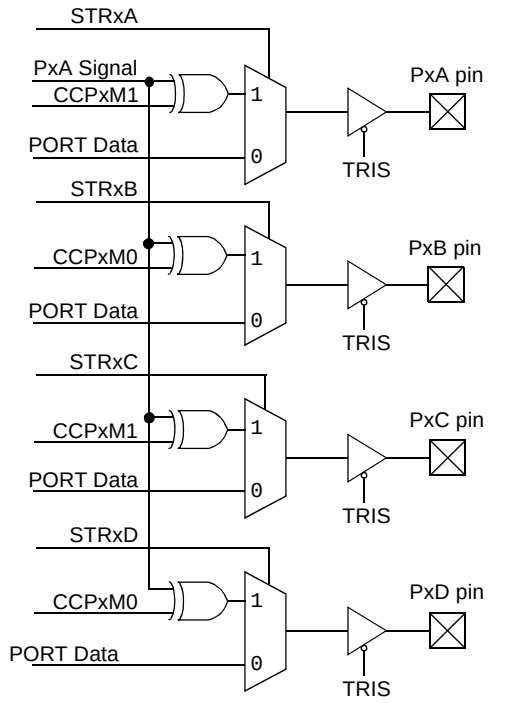

Note 1: Port outputs are configured as shown when the CCPxCON register bits PxM<1:0> = 00 and CCPxM<3:2> = 11.

2: Single PWM output requires setting at least one of the STRx bits.

14.4.6.1 Steering Synchronization

The STRxSYNC bit of the PSTRxCON register gives the user two selections of when the steering event will happen. When the STRxSYNC bit is '0', the steering event will happen at the end of the instruction that writes to the PSTRxCON register. In this case, the output signal at the PxA, PxB, PxC and PxD pins may be an incomplete PWM waveform. This operation is useful when the user firmware needs to immediately remove a PWM signal from the pin.

When the STRxSYNC bit is '1', the effective steering update will happen at the beginning of the next PWM period. In this case, steering on/off the PWM output will always produce a complete PWM waveform.

Figures 14-19 and 14-20 illustrate the timing diagrams of the PWM steering depending on the STRxSYNC setting.

© 2010-2016 Microchip Technology Inc.

14.4.7 START-UP CONSIDERATIONS

When any PWM mode is used, the application hardware must use the proper external pull-up and/or pull-down resistors on the PWM output pins.

The CCPxM<1:0> bits of the CCPxCON register allow the user to choose whether the PWM output signals are active-high or active-low for each pair of PWM output pins (PxA/PxC and PxB/PxD). The PWM output polarities must be selected before the PWM pin output drivers are enabled. Changing the polarity configuration while the PWM pin output drivers are enable is not recommended since it may result in damage to the application circuits.

The PxA, PxB, PxC and PxD output latches may not be in the proper states when the PWM module is initialized. Enabling the PWM pin output drivers at the same time as the Enhanced PWM modes may cause damage to the application circuit.

The Enhanced PWM modes must be enabled in the proper Output mode and complete a full PWM cycle before enabling the PWM pin output drivers. The completion of a full PWM cycle is indicated by the TMRxIF bit of the PIR1, PIR2 or PIR5 register being set as the second PWM period begins.

Note:	When the microcontroller is released from Reset, all of the I/O pins are in the high-impedance state. The external circuits must keep the power switch devices in the Off state until the microcontroller drives the I/O pins with the proper signal levels or activates the PWM output(s).

FIGURE 14-19: EXAMPLE OF STEERING EVENT AT END OF INSTRUCTION (STRxSYNC = 0)

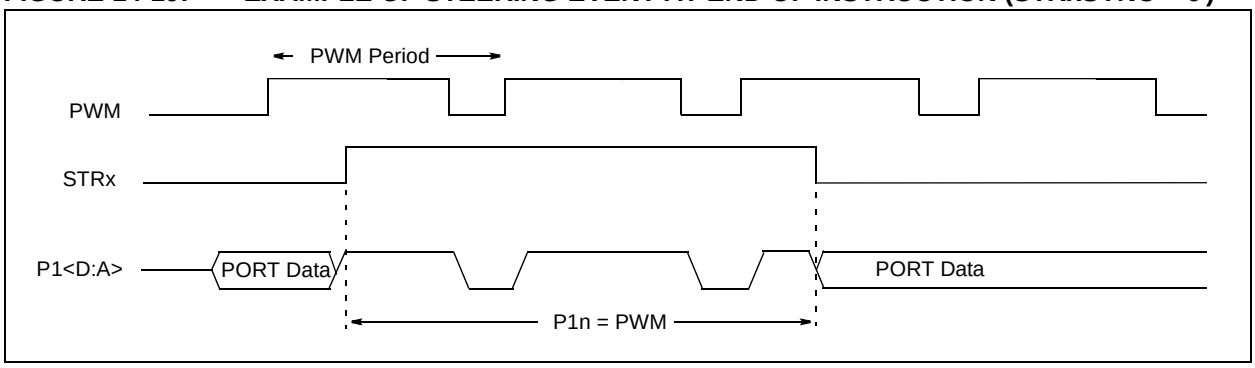

FIGURE 14-20: EXAMPLE OF STEERING EVENT AT BEGINNING OF INSTRUCTION (STRxSYNC = 1)

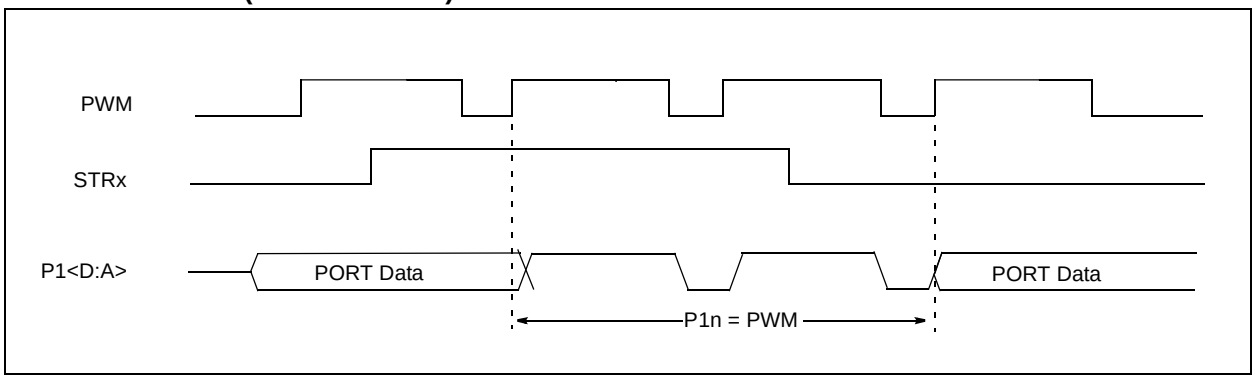

14.4.8 SETUP FOR ECCP PWM OPERATION USING ECCP1 AND TIMER2

The following steps should be taken when configuring the ECCP1 module for PWM operation using Timer2:

1. Configure the PWM pins to be used (P1A, P1B, P1C, and P1D):
   - Configure PWM outputs to be used as inputs by setting the corresponding TRIS bits. This prevents spurious outputs during setup.
   - Set the PSTR1CON bits for each PWM output to be used.
2. Select Timer2 as the period timer by configuring CCPTMR0 register bits C1TSEL<1:0> = ‘00’.
3. Set the PWM period by loading the PR2 register.
4. Configure auto-shutdown as OFF or select the source with the CCP1AS<2:0> bits of the ECCP1AS register.
5. Configure the auto-shutdown sources as needed:
   - Configure each comparator used.
   - Configure the comparator inputs as analog.
   - Configure the FLT0 input pin and clear ANSB0.
6. Force a shutdown condition (OFF included):
   - Configure safe starting output levels by setting the default shutdown drive states with the PSS1AC<1:0> and PSS1BD<1:0> bits of the ECCP1AS register.
   - Clear the P1RSEN bit of the PWM1CON register.
   - Set the CCP1AS bit of the ECCP1AS register.
7. Configure the ECCP1 module for the desired PWM mode and configuration by loading the CCP1CON register with the appropriate values:
   - Select one of the available output configurations and direction with the P1M<1:0> bits.
   - Select the polarities of the PWM output signals with the CCP1M<3:0> bits.
8. Set the 10-bit PWM duty cycle:
   - Load the eight MSbs into the CCPR1L register.
   - Load the two LSbs into the DC<1:0> bits of the CCP1CON register.
9. For Half-Bridge Output mode, set the dead-band delay by loading P1DC<6:0> bits of the PWM1CON register with the appropriate value.
10. Configure and start TMR2:
    - Set the TMR2 prescale value by loading the T2CKPS bits of the T2CON register.
    - Start Timer2 by setting the TMR2ON bit.
11. Enable the ECCP1/P1A, P1B, P1C and/or P1D pin outputs by clearing the respective TRIS bits.
12. Start the PWM:
    - If shutdown auto-restart is used, then set the P1RSEN bit of the PWM1CON register.
    - If shutdown auto-restart is not used, then clear the CCP1ASE bit of the ECCP1AS register.

© 2010-2016 Microchip Technology Inc.

TABLE 14-13: REGISTERS ASSOCIATED WITH ENHANCED PWM

Name	Bit 7	Bit 6	Bit 5	Bit 4	Bit 3	Bit 2	Bit 1	Bit 0	Register on Page
ECCP1AS	CCP1ASE	CCP1AS<2:0>			PSS1AC<1:0>		PSS1BD<1:0>		202
CCP1CON	P1M<1:0>		DC1B<1:0>		CCP1M<3:0>				198
ECCP2AS	CCP2ASE	CCP2AS<2:0>			PSS2AC<1:0>		PSS2BD<1:0>		202
CCP2CON	P2M<1:0>		DC2B<1:0>		CCP2M<3:0>				198
ECCP3AS	CCP3ASE	CCP3AS<2:0>			PSS3AC<1:0>		PSS3BD<1:0>		202
CCP3CON	P3M<1:0>		DC3B<1:0>		CCP3M<3:0>				198
CCPTMRS0	C3TSEL<1:0>		—	C2TSEL<1:0>		—	C1TSEL<1:0>		201
INTCON	GIE/GIEH	PEIE/GIEL	TMR0IE	INT0IE	RBIE	TMR0IF	INT0IF	RBIF	109
IPR1	—	ADIP	RC1IP	TX1IP	SSP1IP	CCP1IP	TMR2IP	TMR1IP	121
IPR2	OSCFIP	C1IP	C2IP	EEIP	BCL1IP	HLVDIP	TMR3IP	CCP2IP	122
IPR4	—	—	—	—	—	CCP5IP	CCP4IP	CCP3IP	124
PIE1	—	ADIE	RC1IE	TX1IE	SSP1IE	CCP1IE	TMR2IE	TMR1IE	117
PIE2	OSCFIE	C1IE	C2IE	EEIE	BCL1IE	HLVDIE	TMR3IE	CCP2IE	118
PIE4	—	—	—	—	—	CCP5IE	CCP4IE	CCP3IE	120
PIR1	—	ADIF	RC1IF	TX1IF	SSP1IF	CCP1IF	TMR2IF	TMR1IF	112
PIR2	OSCFIF	C1IF	C2IF	EEIF	BCL1IF	HLVDIF	TMR3IF	CCP2IF	113
PIR4	—	—	—	—	—	CCP5IF	CCP4IF	CCP3IF	115
PMD0	UART2MD	UART1MD	TMR6MD	TMR5MD	TMR4MD	TMR3MD	TMR2MD	TMR1MD	52
PMD1	MSSP2MD	MSSP1MD	—	CCP5MD	CCP4MD	CCP3MD	CCP2MD	CCP1MD	53
PR2	Timer2 Period Register								—
PR4	Timer4 Period Register								—
PR6	Timer6 Period Register								—
PSTR1CON	—	—	—	STR1SYNC	STR1D	STR1C	STR1B	STR1A	203
PSTR2CON	—	—	—	STR2SYNC	STR2D	STR2C	STR2B	STR2A	203
PSTR3CON	—	—	—	STR3SYNC	STR3D	STR3C	STR3B	STR3A	203
PWM1CON	P1RSEN	P1DC<6:0>							203
PWM2CON	P2RSEN	P2DC<6:0>							203
PWM3CON	P3RSEN	P3DC<6:0>							203
T2CON	—	T2OUTPS<3:0>				TMR2ON	T2CKPS<1:0>		166
T4CON	—	T4OUTPS<3:0>				TMR4ON	T4CKPS<1:0>		166
T6CON	—	T6OUTPS<3:0>				TMR6ON	T6CKPS<1:0>		166
TMR2	Timer2 Register								—
TMR4	Timer4 Register								—
TMR6	Timer6 Register								—
TRISA	TRISA7	TRISA6	TRISA5	TRISA4	TRISA3	TRISA2	TRISA1	TRISA0	151
TRISB	TRISB7	TRISB6	TRISB5	TRISB4	TRISB3	TRISB2	TRISB1	TRISB0	151
TRISC	TRISC7	TRISC6	TRISC5	TRISC4	TRISC3	TRISC2	TRISC1	TRISC0	151
TRISD(1)	TRISD7	TRISD6	TRISD5	TRISD4	TRISD3	TRISD2	TRISD1	TRISD0	151
TRISE	WPUE3	—	—	—	—	TRISE2(1)	TRISE1(1)	TRISE0(1)	151

Legend: — = Unimplemented location, read as '0'. Shaded bits are not used by Enhanced PWM mode.
Note 1: These registers/bits are available on PIC18(L)F4XK22 devices.

TABLE 14-14: CONFIGURATION REGISTERS ASSOCIATED WITH ENHANCED PWM

Name	Bit 7	Bit 6	Bit 5	Bit 4	Bit 3	Bit 2	Bit 1	Bit 0	Register on Page
CONFIG3H	MCLRE	—	P2BMX	T3CMX	HFOFST	CCP3MX	PBADEN	CCP2MX	348

Legend: — = Unimplemented location, read as '0'. Shaded bits are not used by Enhanced PWM mode.

14.5 Register Definitions: ECCP Control

REGISTER 14-1: CCPxCON: STANDARD CCPx CONTROL REGISTER

U-0	U-0	R/W-0	R/W-0	R/W-0	R/W-0	R/W-0	R/W-0
—	—	DCxB<1:0>		CCPxM<3:0>			
bit 7							bit 0

Legend:		
R = Readable bit	W = Writable bit	U = Unimplemented bit, read as ‘0’
u = Bit is unchanged	x = Bit is unknown	-n/n = Value at POR and BOR/Value at all other Reset
‘1’ = Bit is set	‘0’ = Bit is cleared	

bit 7-6 **Unused**

bit 5-4 **DCxB<1:0>:** PWM Duty Cycle Least Significant bits

Capture mode:
Unused

Compare mode:
Unused

PWM mode:
These bits are the two LSbs of the PWM duty cycle. The eight MSbs are found in CCPRxL.

bit 3-0 **CCPxM<3:0>:** ECCPx Mode Select bits

0000 = Capture/Compare/PWM off (resets the module)
0001 = Reserved
0010 = Compare mode: toggle output on match
0011 = Reserved

0100 = Capture mode: every falling edge
0101 = Capture mode: every rising edge
0110 = Capture mode: every 4th rising edge
0111 = Capture mode: every 16th rising edge

1000 = Compare mode: set output on compare match (CCPx pin is set, CCPxIF is set)
1001 = Compare mode: clear output on compare match (CCPx pin is cleared, CCPxIF is set)
1010 = Compare mode: generate software interrupt on compare match (CCPx pin is unaffected, CCPxIF is set)
1011 = Compare mode: Special Event Trigger (CCPx pin is unaffected, CCPxIF is set)
TimerX (selected by CxTSEL bits) is reset
ADON is set, starting A/D conversion if A/D module is enabled(1)
11xx =: PWM mode

Note 1: This feature is available on CCP5 only.

© 2010-2016 Microchip Technology Inc.

REGISTER 14-2: CCPxCON: ENHANCED CCPx CONTROL REGISTER

R/x-0	R/W-0	R/W-0	R/W-0	R/W-0	R/W-0	R/W-0	R/W-0
PxM<1:0>		DCxB<1:0>		CCPxM<3:0>			
bit 7							bit 0

Legend:		
R = Readable bit	W = Writable bit	U = Unimplemented bit, read as ‘0’
u = Bit is unchanged	x = Bit is unknown	-n/n = Value at POR and BOR/Value at all other Reset
‘1’ = Bit is set	‘0’ = Bit is cleared	

bit 7-6 **PxM<1:0>**: Enhanced PWM Output Configuration bits

If CCPxM<3:2> = `00, 01, 10`: (Capture/Compare modes)

`xx` = PxA assigned as Capture/Compare input; PxB, PxC, PxD assigned as port pins

Half-Bridge ECCP Modules(1):

If CCPxM<3:2> = `11`: (PWM modes)

`0x` = Single output; PxA modulated; PxB assigned as port pin

`1x` = Half-Bridge output; PxA, PxB modulated with dead-band control

Full-Bridge ECCP Modules(1):

If CCPxM<3:2> = `11`: (PWM modes)

`00` = Single output; PxA modulated; PxB, PxC, PxD assigned as port pins

`01` = Full-Bridge output forward; PxD modulated; PxA active; PxB, PxC inactive

`10` = Half-Bridge output; PxA, PxB modulated with dead-band control; PxC, PxD assigned as port pins

`11` = Full-Bridge output reverse; PxB modulated; PxC active; PxA, PxD inactive

bit 5-4 **DCxB<1:0>:** PWM Duty Cycle Least Significant bits

Capture mode:

Unused

Compare mode:

Unused

PWM mode:

These bits are the two LSbs of the PWM duty cycle. The eight MSbs are found in CCPRxL.

Note 1: See Table 14-1 to determine full-bridge and half-bridge ECCPs for the device being used.

REGISTER 14-2: CCPxCON: ENHANCED CCPx CONTROL REGISTER (CONTINUED)

bit 3-0 **CCPxM<3:0>:** ECCPx Mode Select bits

`0000` = Capture/Compare/PWM off (resets the module)
`0001` = Reserved
`0010` = Compare mode: toggle output on match
`0011` = Reserved

`0100` = Capture mode: every falling edge
`0101` = Capture mode: every rising edge
`0110` = Capture mode: every 4th rising edge
`0111` = Capture mode: every 16th rising edge

`1000` = Compare mode: set output on compare match (CCPx pin is set, CCPxIF is set)
`1001` = Compare mode: clear output on compare match (CCPx pin is cleared, CCPxIF is set)
`1010` = Compare mode: generate software interrupt on compare match (CCPx pin is unaffected, CCPxIF is set)
`1011` = Compare mode: Special Event Trigger (CCPx pin is unaffected, CCPxIF is set)
TimerX is reset

Half-Bridge ECCP Modules(1):
`1100` = PWM mode: PxA active-high; PxB active-high
`1101` = PWM mode: PxA active-high; PxB active-low
`1110` = PWM mode: PxA active-low; PxB active-high
`1111` = PWM mode: PxA active-low; PxB active-low

Full-Bridge ECCP Modules(1):
`1100` = PWM mode: PxA, PxC active-high; PxB, PxD active-high
`1101` = PWM mode: PxA, PxC active-high; PxB, PxD active-low
`1110` = PWM mode: PxA, PxC active-low; PxB, PxD active-high
`1111` = PWM mode: PxA, PxC active-low; PxB, PxD active-low

Note 1: See Table 14-1 to determine full-bridge and half-bridge ECCPs for the device being used.

© 2010-2016 Microchip Technology Inc.

REGISTER 14-3: CCPTMRS0: PWM TIMER SELECTION CONTROL REGISTER 0

R/W-0	R/W-0	U-0	R/W-0	R/W-0	U-0	R/W-0	R/W-0
C3TSEL<1:0>		—	C2TSEL<1:0>		—	C1TSEL<1:0>	
bit 7							bit 0

Legend:		
R = Readable bit	W = Writable bit	U = Unimplemented bit, read as ‘0’
u = Bit is unchanged	x = Bit is unknown	-n/n = Value at POR and BOR/Value at all other Resets
‘1’ = Bit is set	‘0’ = Bit is cleared	

bit 7-6 **C3TSEL<1:0>:** CCP3 Timer Selection bits
00 = CCP3 – Capture/Compare modes use Timer1, PWM modes use Timer2
01 = CCP3 – Capture/Compare modes use Timer3, PWM modes use Timer4
10 = CCP3 – Capture/Compare modes use Timer5, PWM modes use Timer6
11 = Reserved

bit 5 **Unused**

bit 4-3 **C2TSEL<1:0>:** CCP2 Timer Selection bits
00 = CCP2 – Capture/Compare modes use Timer1, PWM modes use Timer2
01 = CCP2 – Capture/Compare modes use Timer3, PWM modes use Timer4
10 = CCP2 – Capture/Compare modes use Timer5, PWM modes use Timer6
11 = Reserved

bit 2 **Unused**

bit 1-0 **C1TSEL<1:0>:** CCP1 Timer Selection bits
00 = CCP1 – Capture/Compare modes use Timer1, PWM modes use Timer2
01 = CCP1 – Capture/Compare modes use Timer3, PWM modes use Timer4
10 = CCP1 – Capture/Compare modes use Timer5, PWM modes use Timer6
11 = Reserved

REGISTER 14-4: CCPTMRS1: PWM TIMER SELECTION CONTROL REGISTER 1

U-0	U-0	U-0	U-0	R/W-0	R/W-0	R/W-0	R/W-0
—	—	—	—	C5TSEL<1:0>		C4TSEL<1:0>	
bit 7							bit 0

Legend:		
R = Readable bit	W = Writable bit	U = Unimplemented bit, read as ‘0’
u = Bit is unchanged	x = Bit is unknown	-n/n = Value at POR and BOR/Value at all other Resets
‘1’ = Bit is set	‘0’ = Bit is cleared	

bit 7-4 **Unimplemented:** Read as ‘0’

bit 3-2 **C5TSEL<1:0>:** CCP5 Timer Selection bits
00 = CCP5 – Capture/Compare modes use Timer1, PWM modes use Timer2
01 = CCP5 – Capture/Compare modes use Timer3, PWM modes use Timer4
10 = CCP5 – Capture/Compare modes use Timer5, PWM modes use Timer6
11 = Reserved

bit 1-0 **C4TSEL<1:0>:** CCP4 Timer Selection bits
00 = CCP4 – Capture/Compare modes use Timer1, PWM modes use Timer2
01 = CCP4 – Capture/Compare modes use Timer3, PWM modes use Timer4
10 = CCP4 – Capture/Compare modes use Timer5, PWM modes use Timer6
11 = Reserved

REGISTER 14-5: ECCPxAS: CCPX AUTO-SHUTDOWN CONTROL REGISTER

R/W-0	R/W-0	R/W-0	R/W-0	R/W-0	R/W-0	R/W-0	R/W-0
CCPxASE	CCPxAS<2:0>			PSSxAC<1:0>		PSSxBD<1:0>	
bit 7							bit 0

Legend:		
R = Readable bit	W = Writable bit	U = Unimplemented bit, read as ‘0’
u = Bit is unchanged	x = Bit is unknown	-n/n = Value at POR and BOR/Value at all other Resets
‘1’ = Bit is set	‘0’ = Bit is cleared	

bit 7 **CCPxASE:** CCPx Auto-shutdown Event Status bit
if PxRSEN = 1;
1 = An Auto-shutdown event occurred; CCPxASE bit will automatically clear when event goes away; CCPx outputs in shutdown state
0 = CCPx outputs are operating
if PxRSEN = 0;
1 = An Auto-shutdown event occurred; bit must be cleared in software to restart PWM; CCPx outputs in shutdown state
0 = CCPx outputs are operating

bit 6-4 **CCPxAS<2:0>:** CCPx Auto-Shutdown Source Select bits (1)
000 = Auto-shutdown is disabled
001 = Comparator C1 (async_C1OUT) – output high will cause shutdown event
010 = Comparator C2 (async_C2OUT) – output high will cause shutdown event
011 = Either Comparator C1 or C2 – output high will cause shutdown event
100 = FLT0 pin – low level will cause shutdown event
101 = FLT0 pin – low level or Comparator C1 (async_C1OUT) – high level will cause shutdown event
110 = FLT0 pin – low level or Comparator C2 (async_C2OUT) – high level will cause shutdown event
111 = FLT0 pin – low level or Comparators C1 or C2 – high level will cause shutdown event

bit 3-2 **PSSxAC<1:0>:** Pins PxA and PxC Shutdown State Control bits
00 = Drive pins PxA and PxC to ‘0’
01 = Drive pins PxA and PxC to ‘1’
1x = Pins PxA and PxC tri-state

bit 1-0 **PSSxBD<1:0>:** Pins PxB and PxD Shutdown State Control bits
00 = Drive pins PxB and PxD to ‘0’
01 = Drive pins PxB and PxD to ‘1’
1x = Pins PxB and PxD tri-state

Note 1: If C1SYNC or C2SYNC bits in the CM2CON1 register are enabled, the shutdown will be delayed by Timer1.

© 2010-2016 Microchip Technology Inc.

REGISTER 14-6: PWMxCON: ENHANCED PWM CONTROL REGISTER

R/W-0	R/W-0	R/W-0	R/W-0	R/W-0	R/W-0	R/W-0	R/W-0
PxRSEN	PxDC<6:0>						
bit 7							bit 0

Legend:		
R = Readable bit	W = Writable bit	U = Unimplemented bit, read as ‘0’
u = Bit is unchanged	x = Bit is unknown	-n/n = Value at POR and BOR/Value at all other Resets
‘1’ = Bit is set	‘0’ = Bit is cleared	

bit 7 **PxRSEN:** PWM Restart Enable bit
1 = Upon auto-shutdown, the CCPxASE bit clears automatically once the shutdown event goes away; the PWM restarts automatically
0 = Upon auto-shutdown, CCPxASE must be cleared in software to restart the PWM

bit 6-0 **PxDC<6:0>:** PWM Delay Count bits
PxDCx = Number of FOSC/4 (4 * TOSC) cycles between the scheduled time when a PWM signal **should** transition active and the **actual** time it transitions active

REGISTER 14-7: PSTRxCON: PWM STEERING CONTROL REGISTER(1)

U-0	U-0	U-0	R/W-0	R/W-0	R/W-0	R/W-0	R/W-1
—	—	—	STRxSYNC	STRxD	STRxC	STRxB	STRxA
bit 7							bit 0

Legend:		
R = Readable bit	W = Writable bit	U = Unimplemented bit, read as ‘0’
u = Bit is unchanged	x = Bit is unknown	-n/n = Value at POR and BOR/Value at all other Resets
‘1’ = Bit is set	‘0’ = Bit is cleared	

bit 7-5 **Unimplemented:** Read as ‘0’

bit 4 **STRxSYNC:** Steering Sync bit
1 = Output steering update occurs on next PWM period
0 = Output steering update occurs at the beginning of the instruction cycle boundary

bit 3 **STRxD:** Steering Enable bit D
1 = PxD pin has the PWM waveform with polarity control from CCPxM<1:0>
0 = PxD pin is assigned to port pin

bit 2 **STRxC:** Steering Enable bit C
1 = PxC pin has the PWM waveform with polarity control from CCPxM<1:0>
0 = PxC pin is assigned to port pin

bit 1 **STRxB:** Steering Enable bit B
1 = PxB pin has the PWM waveform with polarity control from CCPxM<1:0>
0 = PxB pin is assigned to port pin

bit 0 **STRxA:** Steering Enable bit A
1 = PxA pin has the PWM waveform with polarity control from CCPxM<1:0>
0 = PxA pin is assigned to port pin

Note 1: The PWM Steering mode is available only when the CCPxCON register bits CCPxM<3:2> = 11 and PxM<1:0> = 00.

15.0 MASTER SYNCHRONOUS SERIAL PORT (MSSP1 AND MSSP2) MODULE

15.1 Master SSPx (MSSPx) Module Overview

The Master Synchronous Serial Port (MSSPx) module is a serial interface useful for communicating with other peripheral or microcontroller devices. These peripheral devices may be Serial EEPROMs, shift registers, display drivers, A/D converters, etc. The MSSPx module can operate in one of two modes:

- Serial Peripheral Interface (SPI)
- Inter-Integrated Circuit (I^2C)

The SPI interface supports the following modes and features:

- Master mode
- Slave mode
- Clock Parity
- Slave Select Synchronization (Slave mode only)
- Daisy chain connection of slave devices

Figure 15-1 is a block diagram of the SPI interface module.

FIGURE 15-1: MSSPx BLOCK DIAGRAM (SPI MODE)

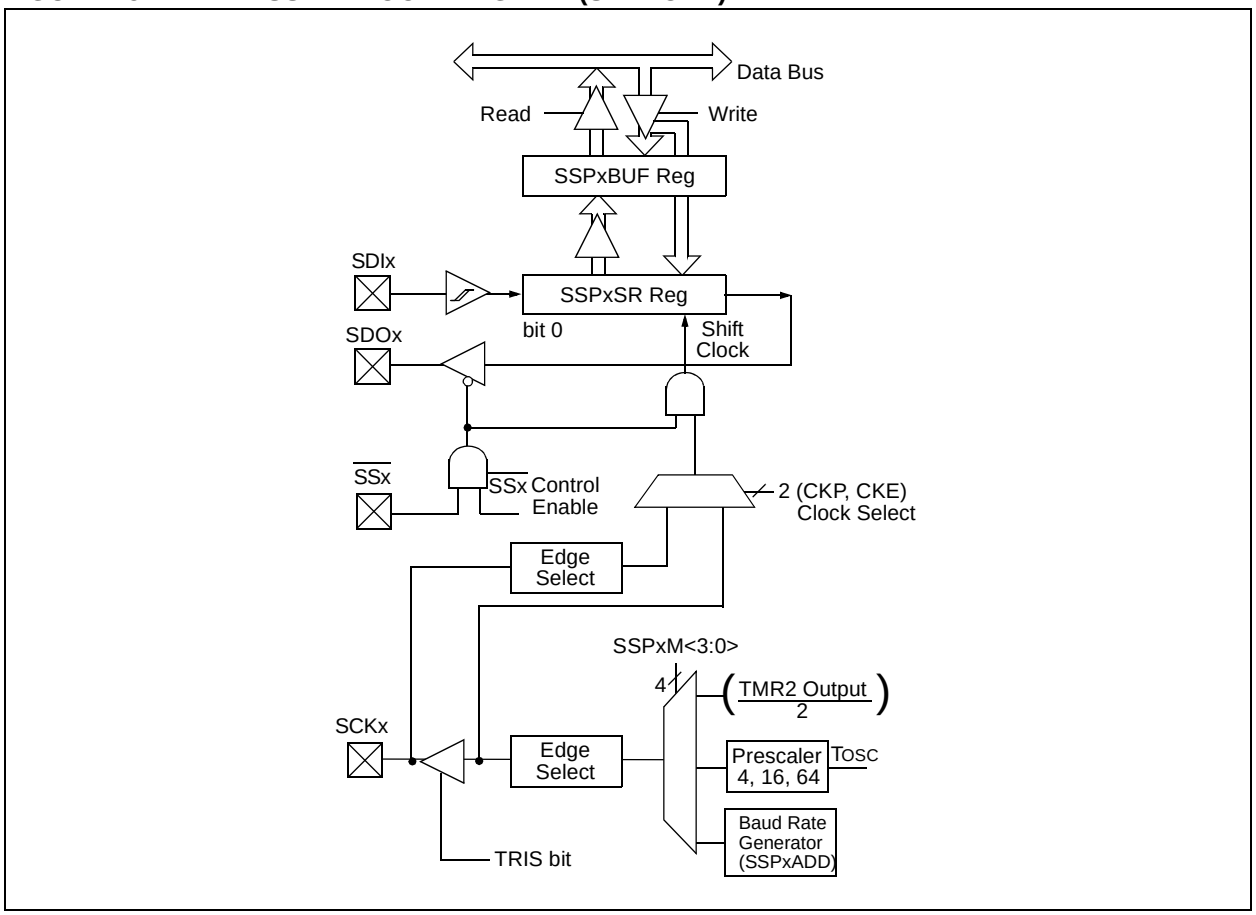

© 2010-2016 Microchip Technology Inc.

The I^{2}C interface supports the following modes and features:

- Master mode
- Slave mode
- Byte NACKing (Slave mode)
- Limited Multi-master support
- 7-bit and 10-bit addressing
- Start and Stop interrupts
- Interrupt masking
- Clock stretching
- Bus collision detection
- General call address matching
- Address masking
- Address Hold and Data Hold modes
- Selectable SDAx hold times

Figure 15-2 is a block diagram of the I^{2}C interface module in Master mode. Figure 15-3 is a diagram of the I^{2}C interface module in Slave mode.

The PIC18(L)F2X/4XK22 has two MSSP modules, MSSP1 and MSSP2, each module operating independently from the other.

Note 1: In devices with more than one MSSP module, it is very important to pay close attention to SSPxCONx register names. SSP1CON1 and SSP1CON2 registers control different operational aspects of the same module, while SSP1CON1 and SSP2CON1 control the same features for two different modules.

2: Throughout this section, generic references to an MSSP module in any of its operating modes may be interpreted as being equally applicable to MSSP1 or MSSP2. Register names, module I/O signals, and bit names may use the generic designator 'x' to indicate the use of a numeral to distinguish a particular module when required.

FIGURE 15-2: MSSPx BLOCK DIAGRAM (I^{2}C MASTER MODE)

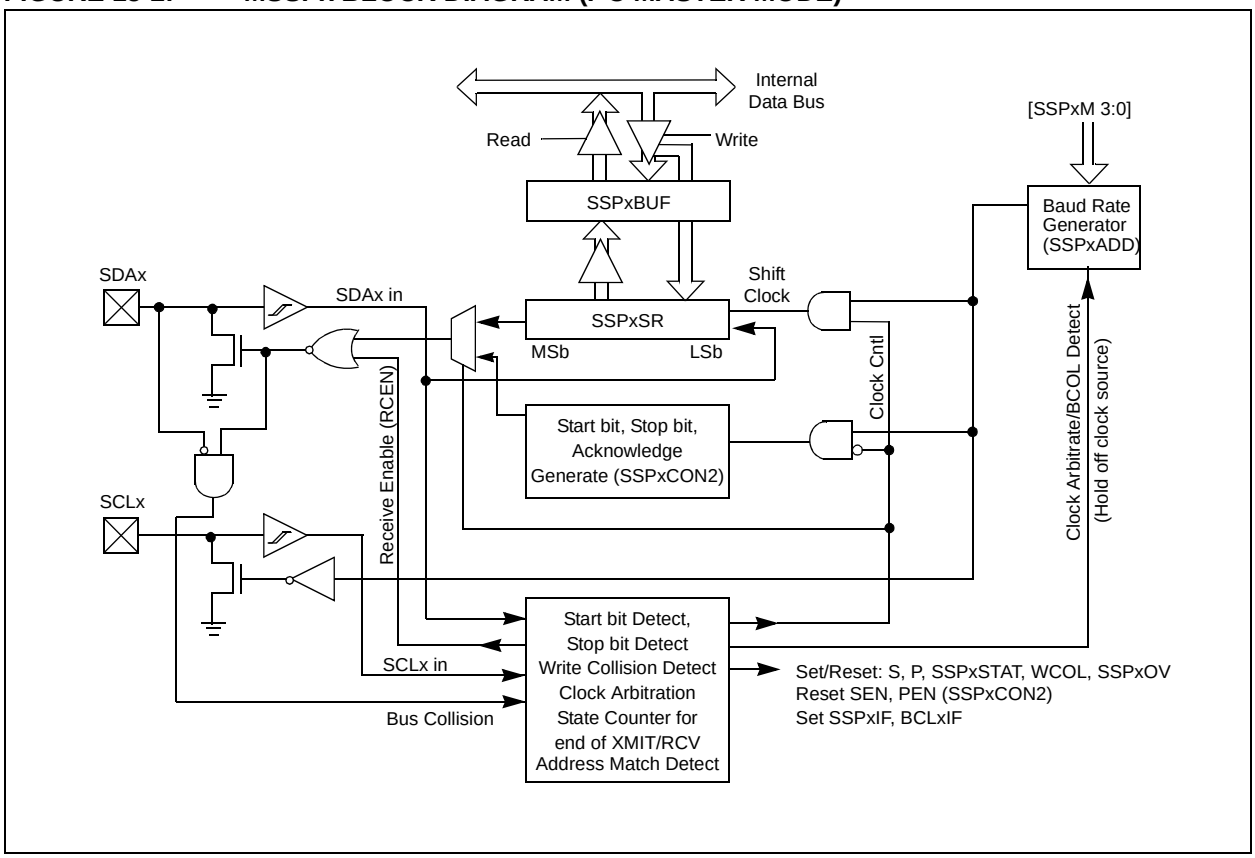

FIGURE 15-3: MSSPx BLOCK DIAGRAM (I^2C SLAVE MODE)

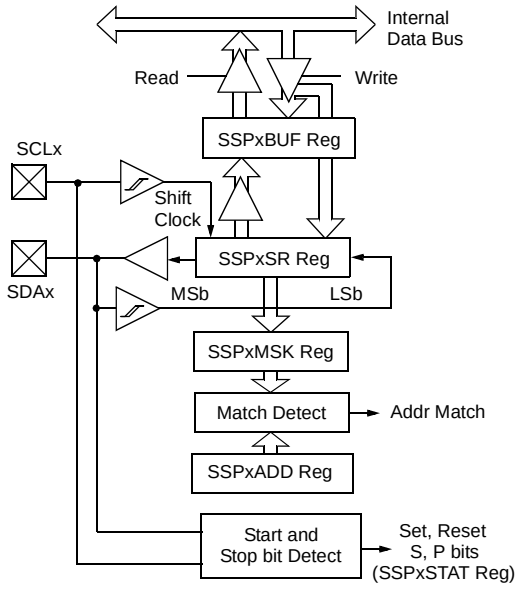

© 2010-2016 Microchip Technology Inc.

15.2 SPI Mode Overview

The Serial Peripheral Interface (SPI) bus is a synchronous serial data communication bus that operates in Full-Duplex mode. Devices communicate in a master/slave environment where the master device initiates the communication. A slave device is controlled through a chip select known as Slave Select.

The SPI bus specifies four signal connections:

- Serial Clock (SCKx)
- Serial Data Out (SDOx)
- Serial Data In (SDIx)
- Slave Select ($\overline{\text{SSx}}$)

Figure 15-1 shows the block diagram of the MSSPx module when operating in SPI Mode.

The SPI bus operates with a single master device and one or more slave devices. When multiple slave devices are used, an independent Slave Select connection is required from the master device to each slave device.

Figure 15-4 shows a typical connection between a master device and multiple slave devices.

The master selects only one slave at a time. Most slave devices have tri-state outputs so their output signal appears disconnected from the bus when they are not selected.

Transmissions involve two shift registers, eight bits in size, one in the master and one in the slave. With either the master or the slave device, data is always shifted out one bit at a time, with the Most Significant bit (MSb) shifted out first. At the same time, a new Least Significant bit (LSb) is shifted into the same register.

Figure 15-5 shows a typical connection between two processors configured as master and slave devices.

Data is shifted out of both shift registers on the programmed clock edge and latched on the opposite edge of the clock.

The master device transmits information out on its SDOx output pin which is connected to, and received by, the slave's SDIx input pin. The slave device transmits information out on its SDOx output pin, which is connected to, and received by, the master's SDIx input pin.

To begin communication, the master device first sends out the clock signal. Both the master and the slave devices should be configured for the same clock polarity.

The master device starts a transmission by sending out the MSb from its shift register. The slave device reads this bit from that same line and saves it into the LSb position of its shift register.

During each SPI clock cycle, a full-duplex data transmission occurs. This means that at the same time, the slave device is sending out the MSb from its shift register and the master device is reading this bit from that same line and saving it as the LSb of its shift register.

After 8 bits have been shifted out, the master and slave have exchanged register values.

If there is more data to exchange, the shift registers are loaded with new data and the process repeats itself.

Whether the data is meaningful or not (dummy data), depends on the application software. This leads to three scenarios for data transmission:

- Master sends useful data and slave sends dummy data.
- Master sends useful data and slave sends useful data.
- Master sends dummy data and slave sends useful data.

Transmissions may involve any number of clock cycles. When there is no more data to be transmitted, the master stops sending the clock signal and it deselects the slave.

Every slave device connected to the bus that has not been selected through its slave select line must disregard the clock and transmission signals and must not transmit out any data of its own.

FIGURE 15-4: SPI MASTER AND MULTIPLE SLAVE CONNECTION

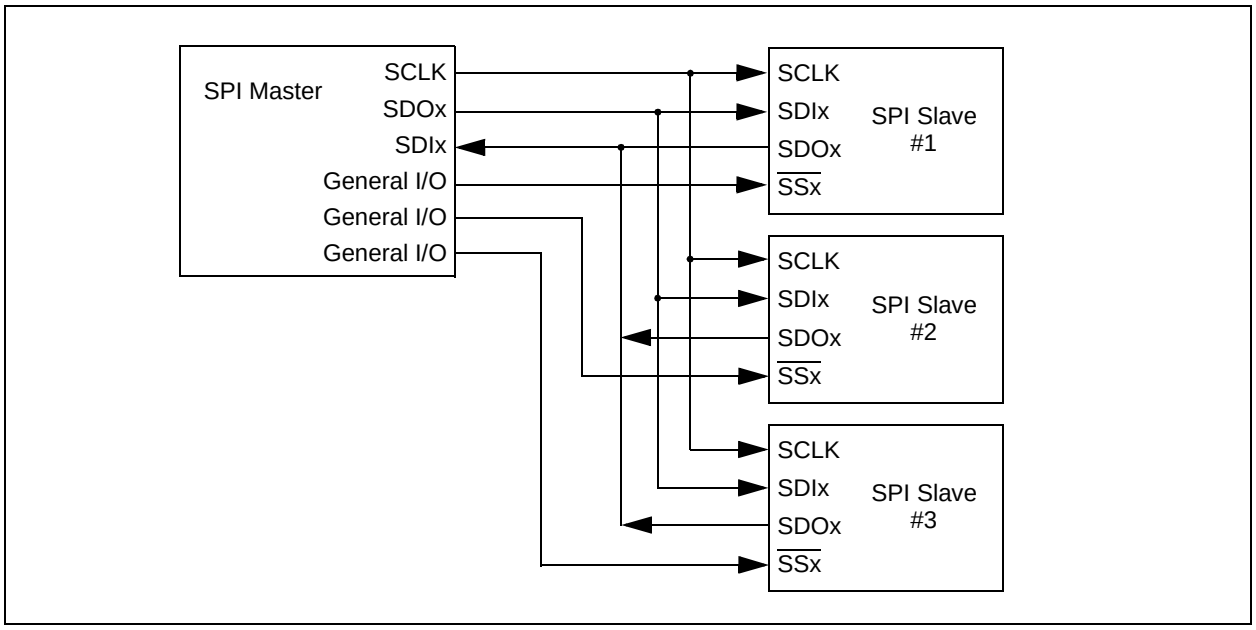

15.2.1 SPI MODE REGISTERS

The MSSPx module has five registers for SPI mode operation. These are:

- MSSPx STATUS register (SSPxSTAT)
- MSSPx Control register 1 (SSPxCON1)
- MSSPx Control register 3 (SSPxCON3)
- MSSPx Data Buffer register (SSPxBUF)
- MSSPx Address register (SSPxADD)
- MSSPx Shift register (SSPxSR) (Not directly accessible)

SSPxCON1 and SSPxSTAT are the control and STATUS registers in SPI mode operation. The SSPxCON1 register is readable and writable. The lower 6 bits of the SSPxSTAT are read-only. The upper two bits of the SSPxSTAT are read/write.

In one SPI Master mode, SSPxADD can be loaded with a value used in the Baud Rate Generator. More information on the Baud Rate Generator is available in **Section 15.7 “Baud Rate Generator”**.

SSPxSR is the shift register used for shifting data in and out. SSPxBUF provides indirect access to the SSPxSR register. SSPxBUF is the buffer register to which data bytes are written, and from which data bytes are read.

In receive operations, SSPxSR and SSPxBUF together create a buffered receiver. When SSPxSR receives a complete byte, it is transferred to SSPxBUF and the SSPxIF interrupt is set.

During transmission, the SSPxBUF is not buffered. A write to SSPxBUF will write to both SSPxBUF and SSPxSR.

15.2.2 SPI MODE OPERATION

When initializing the SPI, several options need to be specified. This is done by programming the appropriate control bits (SSPxCON1<5:0> and SSPxSTAT<7:6>). These control bits allow the following to be specified:

- Master mode (SCKx is the clock output)
- Slave mode (SCKx is the clock input)
- Clock Polarity (Idle state of SCKx)
- Data Input Sample Phase (middle or end of data output time)
- Clock Edge (output data on rising/falling edge of SCKx)
- Clock Rate (Master mode only)
- Slave Select mode (Slave mode only)

To enable the serial port, SSPx Enable bit, SSPxEN of the SSPxCON1 register, must be set. To reset or reconfigure SPI mode, clear the SSPxEN bit, re-initialize the SSPxCONx registers and then set the SSPxEN bit. This configures the SDIx, SDOx, SCKx and $\overline{\text{SSx}}$ pins as serial port pins. For the pins to behave as the serial port function, some must have their data direction bits (in the TRIS register) appropriately programmed as follows:

- SDIx must have corresponding TRIS bit set
- SDOx must have corresponding TRIS bit cleared
- SCKx (Master mode) must have corresponding TRIS bit cleared
- SCKx (Slave mode) must have corresponding TRIS bit set
- $\overline{\text{SSx}}$ must have corresponding TRIS bit set

© 2010-2016 Microchip Technology Inc.

Any serial port function that is not desired may be overridden by programming the corresponding data direction (TRIS) register to the opposite value.

The MSSPx consists of a transmit/receive shift register (SSPxSR) and a buffer register (SSPxBUF). The SSPxSR shifts the data in and out of the device, MSb first. The SSPxBUF holds the data that was written to the SSPxSR until the received data is ready. Once the 8 bits of data have been received, that byte is moved to the SSPxBUF register. Then, the Buffer Full Detect bit, BF of the SSPxSTAT register, and the interrupt flag bit, SSPxIF, are set. This double-buffering of the received data (SSPxBUF) allows the next byte to start reception before reading the data that was just received. Any write to the SSPxBUF register during transmission/reception of data will be ignored and the write collision detect bit, WCOL of the SSPxCON1 register, will be set. User software must clear the WCOL bit to allow the following write(s) to the SSPxBUF register to complete successfully.

When the application software is expecting to receive valid data, the SSPxBUF should be read before the next byte of data to transfer is written to the SSPxBUF. The Buffer Full bit, BF of the SSPxSTAT register, indicates when SSPxBUF has been loaded with the received data (transmission is complete). When the SSPxBUF is read, the BF bit is cleared. This data may be irrelevant if the SPI is only a transmitter. Generally, the MSSPx interrupt is used to determine when the transmission/reception has completed. If the interrupt method is not going to be used, then software polling can be done to ensure that a write collision does not occur.

FIGURE 15-5: SPI MASTER/SLAVE CONNECTION

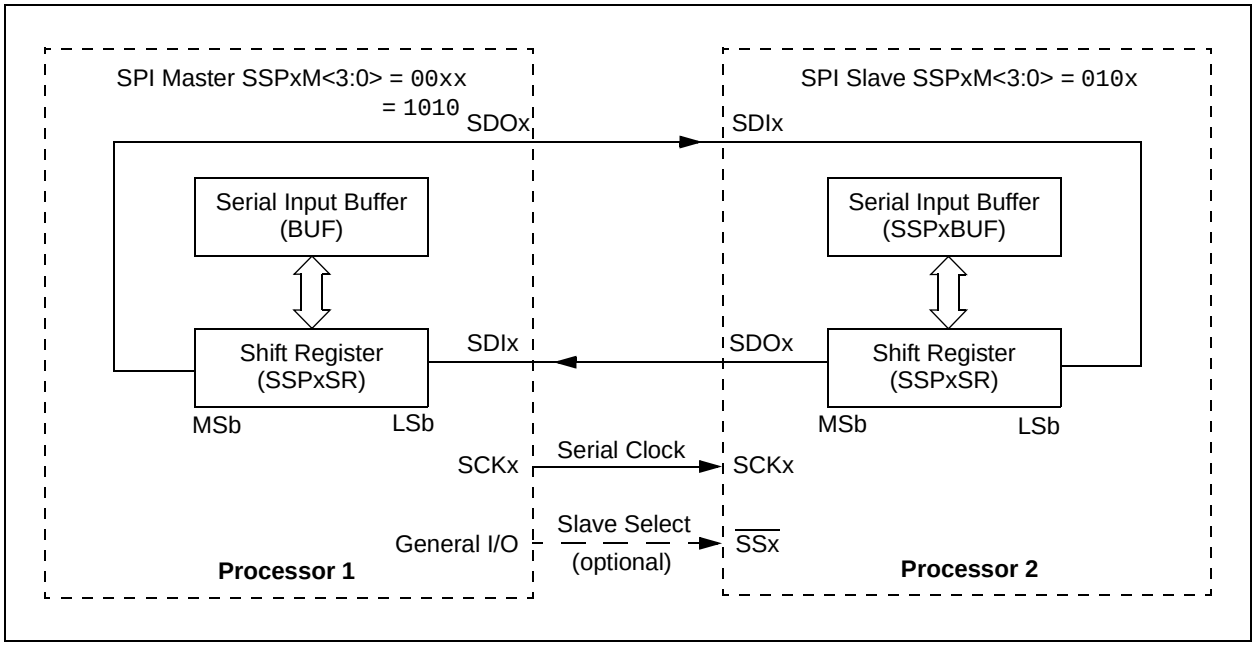

15.2.3 SPI MASTER MODE

The master can initiate the data transfer at any time because it controls the SCKx line. The master determines when the slave (Processor 2, Figure 15-5) is to broadcast data by the software protocol.

In Master mode, the data is transmitted/received as soon as the SSPxBUF register is written to. If the SPI is only going to receive, the SDOx output could be disabled (programmed as an input). The SSPxSR register will continue to shift in the signal present on the SDIx pin at the programmed clock rate. As each byte is received, it will be loaded into the SSPxBUF register as if a normal received byte (interrupts and Status bits appropriately set).

The clock polarity is selected by appropriately programming the CKP bit of the SSPxCON1 register and the CKE bit of the SSPxSTAT register.

This then, would give waveforms for SPI communication as shown in Figure 15-6, Figure 15-8, Figure 15-9 and Figure 15-10, where the MSB is transmitted first. In Master mode, the SPI clock rate (bit rate) is user programmable to be one of the following:

- FOSC/4 (or TCY)
- FOSC/16 (or 4 * TCY)
- FOSC/64 (or 16 * TCY)
- Timer2 output/2
- FOSC/(4 * (SSPxADD + 1))

Figure 15-6 shows the waveforms for Master mode.

When the CKE bit is set, the SDOx data is valid before there is a clock edge on SCKx. The change of the input sample is shown based on the state of the SMP bit. The time when the SSPxBUF is loaded with the received data is shown.

FIGURE 15-6: SPI MODE WAVEFORM (MASTER MODE)

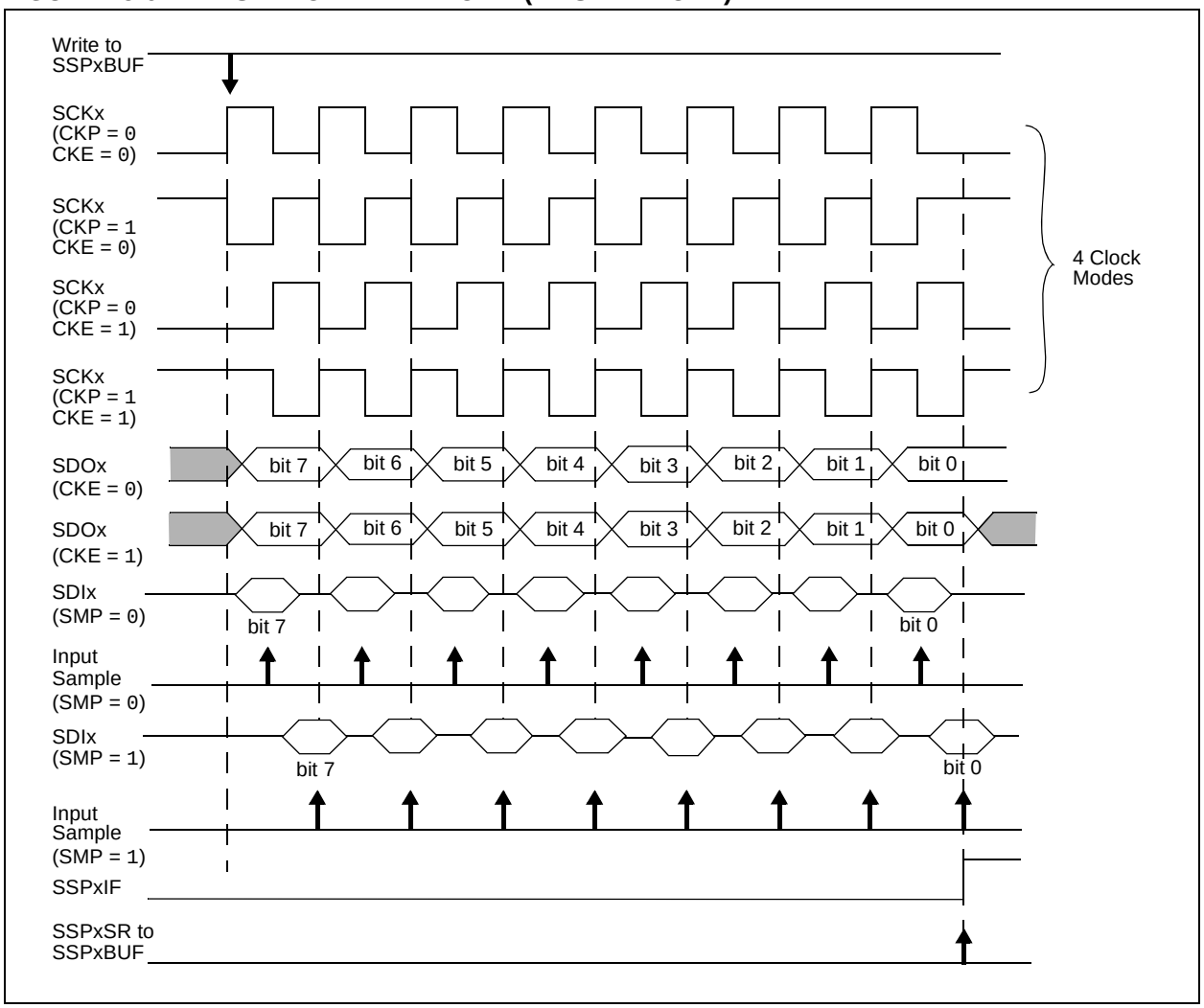

© 2010-2016 Microchip Technology Inc.

15.2.4 SPI SLAVE MODE

In Slave mode, the data is transmitted and received as external clock pulses appear on SCKx. When the last bit is latched, the SSPxIF interrupt flag bit is set.

Before enabling the module in SPI Slave mode, the clock line must match the proper Idle state. The clock line can be observed by reading the SCKx pin. The Idle state is determined by the CKP bit of the SSPxCON1 register.

While in Slave mode, the external clock is supplied by the external clock source on the SCKx pin. This external clock must meet the minimum high and low times as specified in the electrical specifications.

While in Sleep mode, the slave can transmit/receive data. The shift register is clocked from the SCKx pin input and when a byte is received, the device will generate an interrupt. If enabled, the device will wake up from Sleep.

15.2.4.1 Daisy-Chain Configuration

The SPI bus can sometimes be connected in a daisy-chain configuration. The first slave output is connected to the second slave input, the second slave output is connected to the third slave input, and so on. The final slave output is connected to the master input. Each slave sends out, during a second group of clock pulses, an exact copy of what was received during the first group of clock pulses. The whole chain acts as one large communication shift register. The daisy-chain feature only requires a single Slave Select line from the master device.

Figure 15-7 shows the block diagram of a typical daisy-chain connection when operating in SPI Mode.

In a daisy-chain configuration, only the most recent byte on the bus is required by the slave. Setting the BOEN bit of the SSPxCON3 register will enable writes to the SSPxBUF register, even if the previous byte has not been read. This allows the software to ignore data that may not apply to it.

15.2.5 SLAVE SELECT SYNCHRONIZATION

The Slave Select can also be used to synchronize communication. The Slave Select line is held high until the master device is ready to communicate. When the Slave Select line is pulled low, the slave knows that a new transmission is starting.

If the slave fails to receive the communication properly, it will be reset at the end of the transmission, when the Slave Select line returns to a high state. The slave is then ready to receive a new transmission when the Slave Select line is pulled low again. If the Slave Select line is not used, there is a risk that the slave will eventually become out of sync with the master. If the slave misses a bit, it will always be one bit off in future transmissions. Use of the Slave Select line allows the slave and master to align themselves at the beginning of each transmission (Figure 15-8).

The $\overline{SSx}$ pin allows a Synchronous Slave mode. The SPI must be in Slave mode with $\overline{SSx}$ pin control enabled (SSPxCON1<3:0> = `0100`).

When the $\overline{SSx}$ pin is low, transmission and reception are enabled and the SDOx pin is driven.

When the $\overline{SSx}$ pin goes high, the SDOx pin is no longer driven, even if in the middle of a transmitted byte and becomes a floating output. External pull-up/pull-down resistors may be desirable depending on the application.

> **Note 1:** When the SPI is in Slave mode with $\overline{SSx}$ pin control enabled (SSPxCON1<3:0> = `0100`), the SPI module will reset if the $\overline{SSx}$ pin is set to VDD.
>
> **2:** When the SPI is used in Slave mode with CKE set; the user must enable $\overline{SSx}$ pin control.
>
> **3:** While operated in SPI Slave mode the SMP bit of the SSPxSTAT register must remain clear.

When the SPI module resets, the bit counter is forced to '`0`'. This can be done by either forcing the $\overline{SSx}$ pin to a high level or clearing the SSPxEN bit.

FIGURE 15-7: SPI DAISY-CHAIN CONNECTION

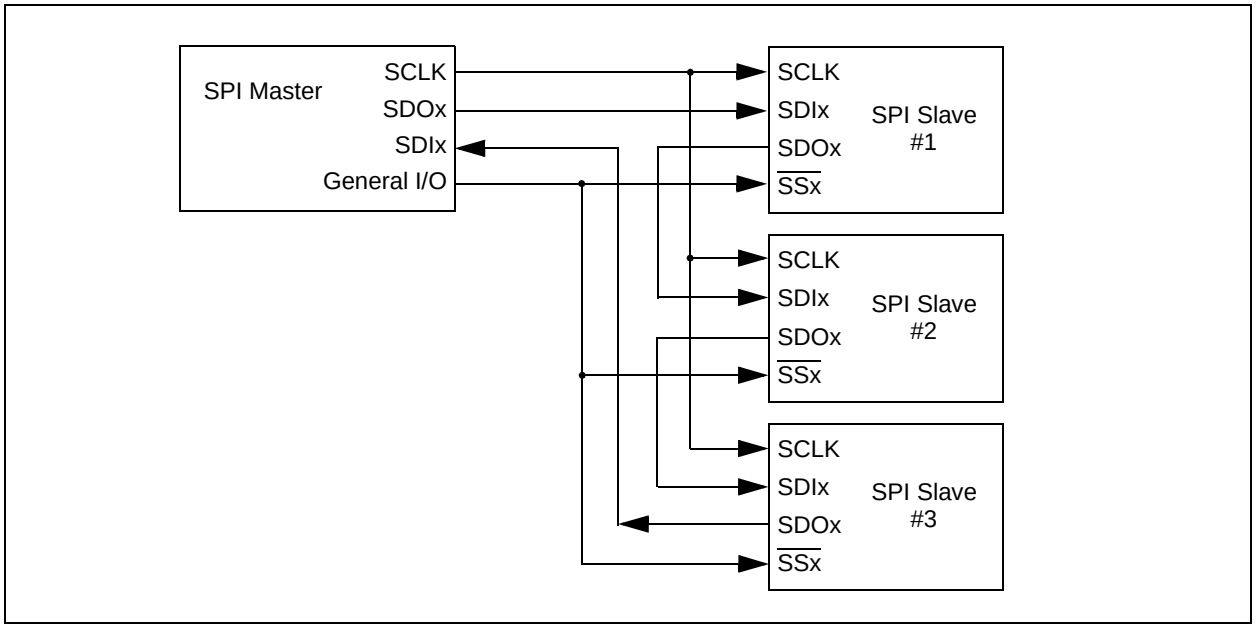

FIGURE 15-8: SLAVE SELECT SYNCHRONOUS WAVEFORM

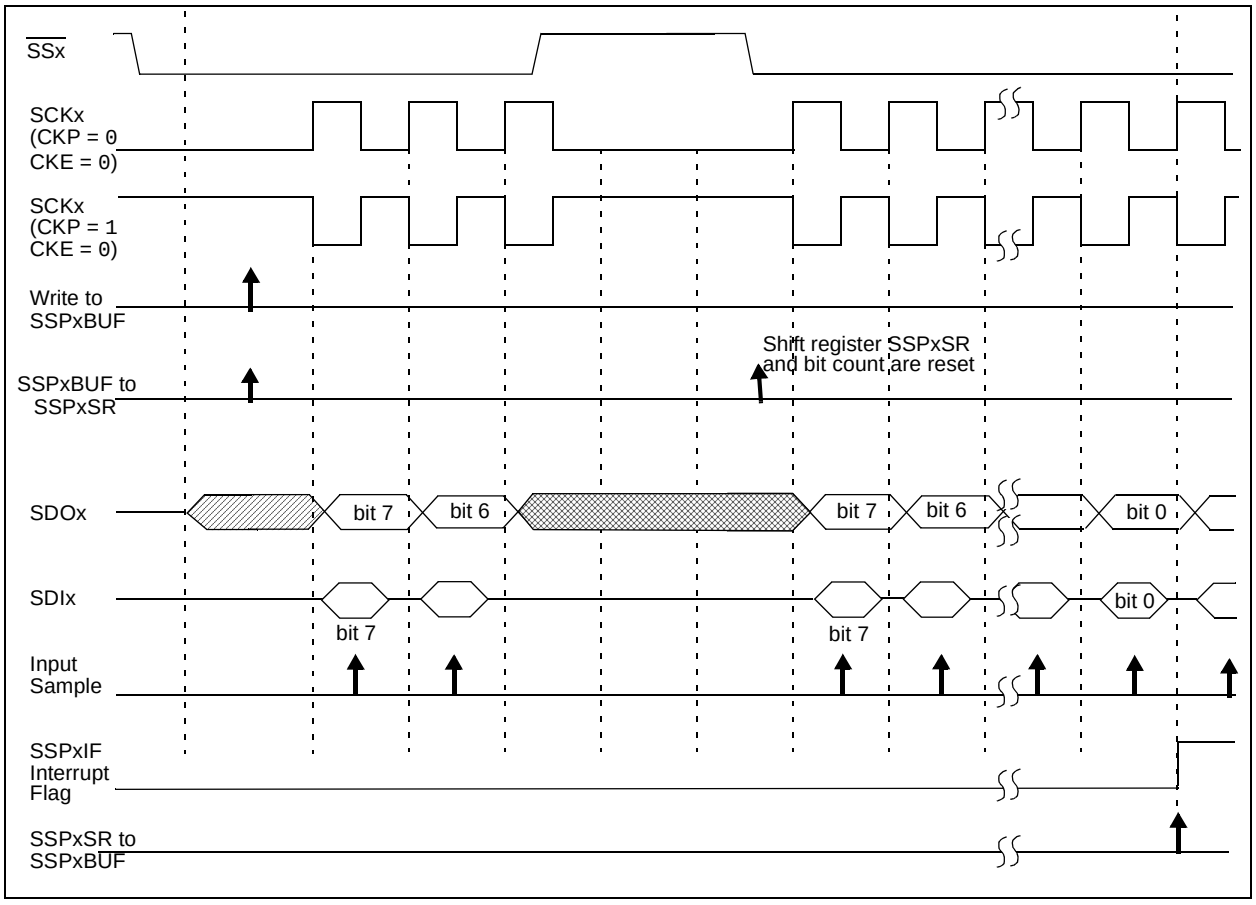

© 2010-2016 Microchip Technology Inc.

FIGURE 15-9: SPI MODE WAVEFORM (SLAVE MODE WITH CKE = 0)

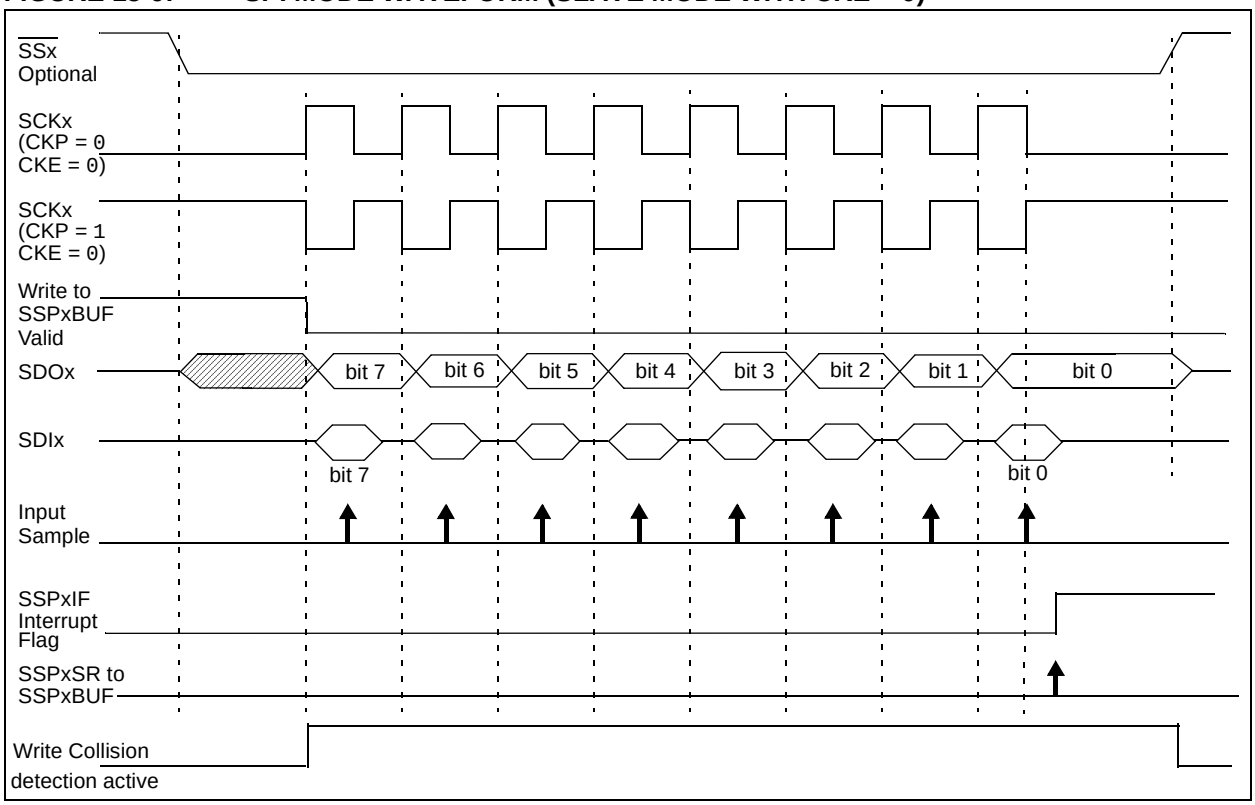

FIGURE 15-10: SPI MODE WAVEFORM (SLAVE MODE WITH CKE = 1)

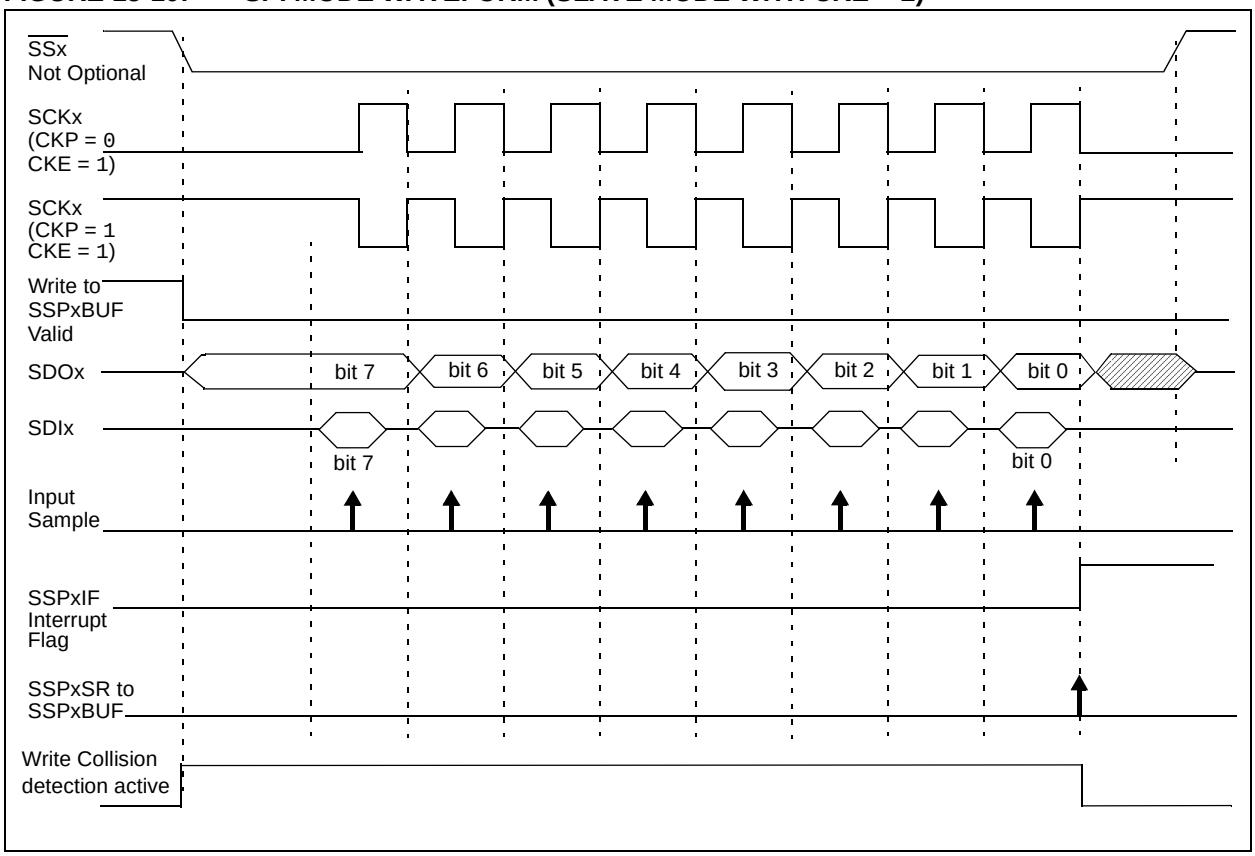

15.2.6 SPI OPERATION IN SLEEP MODE

In SPI Master mode, module clocks may be operating at a different speed than when in Full-Power mode; in the case of the Sleep mode, all clocks are halted.

Special care must be taken by the user when the MSSPx clock is much faster than the system clock.

In Slave mode, when MSSPx interrupts are enabled, after the master completes sending data, an MSSPx interrupt will wake the controller from Sleep.

If an exit from Sleep mode is not desired, MSSPx interrupts should be disabled.

In SPI Master mode, when the Sleep mode is selected, all module clocks are halted and the transmission/reception will remain in that state until the device wakes. After the device returns to Run mode, the module will resume transmitting and receiving data.

In SPI Slave mode, the SPI Transmit/Receive Shift register operates asynchronously to the device. This allows the device to be placed in Sleep mode and data to be shifted into the SPI Transmit/Receive Shift register. When all eight bits have been received, the MSSPx interrupt flag bit will be set and if enabled, will wake the device.

TABLE 15-1: REGISTERS ASSOCIATED WITH SPI OPERATION

Name	Bit 7	Bit 6	Bit 5	Bit 4	Bit 3	Bit 2	Bit 1	Bit 0	Register on Page
ANSELA	—	—	ANSA5	—	ANSA3	ANSA2	ANSA1	ANSA0	149
ANSELB	—	—	ANSB5	ANSB4	ANSB3(1)	ANSB2(1)	ANSB1(1)	ANSB0(1)	150
ANSELC	ANSC7	ANSC6	ANSC5	ANSC4	ANSC3	ANSC2	—	—	150
ANSELD	ANSD7	ANSD6	ANSD5	ANSD4(2)	ANSD3(2)	ANSD2	ANSD1(2)	ANSD0(2)	150
INTCON	GIE/GIEH	PEIE/GIEL	TMR0IE	INT0IE	RBIE	TMR0IF	INT0IF	RBIF	109
IPR1	—	ADIP	RC1IP	TX1IP	SSP1IP	CCP1IP	TMR2IP	TMR1IP	121
IPR3	SSP2IP	BCL2IP	RC2IP	TX2IP	CTMUIP	TMR5GIP	TMR3GIP	TMR1GIP	123
PIE1	—	ADIE	RC1IE	TX1IE	SSP1IE	CCP1IE	TMR2IE	TMR1IE	117
PIE3	SSP2IE	BCL2IE	RC2IE	TX2IE	CTMUIE	TMR5GIE	TMR3GIE	TMR1GIE	119
PIR1	—	ADIF	RC1IF	TX1IF	SSP1IF	CCP1IF	TMR2IF	TMR1IF	112
PIR3	SSP2IF	BCL2IF	RC2IF	TX2IF	CTMUIF	TMR5GIF	TMR3GIF	TMR1GIF	114
PMD1	MSSP2MD	MSSP1MD	—	CCP5MD	CCP4MD	CCP3MD	CCP2MD	CCP1MD	53
SSP1BUF	SSP1 Receive Buffer/Transmit Register								—
SSP1CON1	WCOL	SSPOV	SSPEN	CKP	SSPM<3:0>				253
SSP1CON3	ACKTIM	PCIE	SCIE	BOEN	SDAHT	SBCDE	AHEN	DHEN	256
SSP1STAT	SMP	CKE	D/$\overline{A}$	P	S	R/$\overline{W}$	UA	BF	252
SSP2BUF	SSP2 Receive Buffer/Transmit Register								—
SSP2CON1	WCOL	SSPOV	SSPEN	CKP	SSPM<3:0>				253
SSP2CON3	ACKTIM	PCIE	SCIE	BOEN	SDAHT	SBCDE	AHEN	DHEN	256
SSP2STAT	SMP	CKE	D/$\overline{A}$	P	S	R/$\overline{W}$	UA	BF	252
TRISA	TRISA7	TRISA6	TRISA5	TRISA4	TRISA3	TRISA2	TRISA1	TRISA0	151
TRISB	TRISB7	TRISB6	TRISB5	TRISB4	TRISB3(1)	TRISB2(1)	TRISB1(1)	TRISB0(1)	151
TRISC	TRISC7	TRISC6	TRISC5	TRISC4	TRISC3	TRISC2	TRISC1	TRISC0	151
TRISD	TRISD7	TRISD6	TRISD5	TRISD4(2)	TRISD3(2)	TRISD2	TRISD1(2)	TRISD0(2)	151

Legend: Shaded bits are not used by the MSSPx in SPI mode.

Note 1: PIC18(L)F2XK22 devices.

2: PIC18(L)F4XK22 devices.

© 2010-2016 Microchip Technology Inc.

15.3 I²C Mode Overview

The Inter-Integrated Circuit Bus (I^2C) is a multi-master serial data communication bus. Devices communicate in a master/slave environment where the master devices initiate the communication. A slave device is controlled through addressing.

The I^2C bus specifies two signal connections:

- Serial Clock (SCLx)
- Serial Data (SDAx)

Figure 15-2 shows the block diagram of the MSSPx module when operating in I^2C mode.

Both the SCLx and SDAx connections are bidirectional open-drain lines, each requiring pull-up resistors for the supply voltage. Pulling the line to ground is considered a logical zero and letting the line float is considered a logical one.

Figure 15-11 shows a typical connection between two processors configured as master and slave devices.

The I^2C bus can operate with one or more master devices and one or more slave devices.

There are four potential modes of operation for a given device:

- Master Transmit mode
  (master is transmitting data to a slave)
- Master Receive mode
  (master is receiving data from a slave)
- Slave Transmit mode
  (slave is transmitting data to a master)
- Slave Receive mode
  (slave is receiving data from the master)

To begin communication, a master device starts out in Master Transmit mode. The master device sends out a Start bit followed by the address byte of the slave it intends to communicate with. This is followed by a single Read/Write bit, which determines whether the master intends to transmit to or receive data from the slave device.

If the requested slave exists on the bus, it will respond with an Acknowledge bit, otherwise known as an $\overline{ACK}$. The master then continues in either Transmit mode or Receive mode and the slave continues in the complement, either in Receive mode or Transmit mode, respectively.

A Start bit is indicated by a high-to-low transition of the SDAx line while the SCLx line is held high. Address and data bytes are sent out, Most Significant bit (MSb) first. The Read/Write bit is sent out as a logical one when the master intends to read data from the slave, and is sent out as a logical zero when it intends to write data to the slave.

FIGURE 15-11: I²C MASTER/ SLAVE CONNECTION

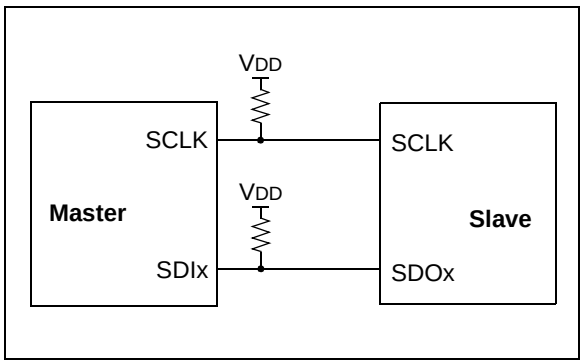

The Acknowledge bit ($\overline{ACK}$) is an active-low signal, which holds the SDAx line low to indicate to the transmitter that the slave device has received the transmitted data and is ready to receive more.

The transition of data bits is always performed while the SCLx line is held low. Transitions that occur while the SCLx line is held high are used to indicate Start and Stop bits.

If the master intends to write to the slave, then it repeatedly sends out a byte of data, with the slave responding after each byte with an $\overline{ACK}$ bit. In this example, the master device is in Master Transmit mode and the slave is in Slave Receive mode.

If the master intends to read from the slave, then it repeatedly receives a byte of data from the slave, and responds after each byte with an $\overline{ACK}$ bit. In this example, the master device is in Master Receive mode and the slave is Slave Transmit mode.

On the last byte of data communicated, the master device may end the transmission by sending a Stop bit. If the master device is in Receive mode, it sends the Stop bit in place of the last $\overline{ACK}$ bit. A Stop bit is indicated by a low-to-high transition of the SDAx line while the SCLx line is held high.

In some cases, the master may want to maintain control of the bus and re-initiate another transmission. If so, the master device may send another Start bit in place of the Stop bit or last $\overline{ACK}$ bit when it is in receive mode.

The I^2C bus specifies three message protocols;

- Single message where a master writes data to a slave.
- Single message where a master reads data from a slave.
- Combined message where a master initiates a minimum of two writes, or two reads, or a combination of writes and reads, to one or more slaves.

When one device is transmitting a logical one, or letting the line float, and a second device is transmitting a logical zero, or holding the line low, the first device can detect that the line is not a logical one. This detection, when used on the SCLx line, is called clock stretching. Clock stretching give slave devices a mechanism to control the flow of data. When this detection is used on the SDAx line, it is called arbitration. Arbitration ensures that there is only one master device communicating at any single time.

15.3.1 CLOCK STRETCHING

When a slave device has not completed processing data, it can delay the transfer of more data through the process of clock stretching. An addressed slave device may hold the SCLx clock line low after receiving or sending a bit, indicating that it is not yet ready to continue. The master that is communicating with the slave will attempt to raise the SCLx line in order to transfer the next bit, but will detect that the clock line has not yet been released. Because the SCLx connection is open-drain, the slave has the ability to hold that line low until it is ready to continue communicating.

Clock stretching allows receivers that cannot keep up with a transmitter to control the flow of incoming data.

15.3.2 ARBITRATION

Each master device must monitor the bus for Start and Stop bits. If the device detects that the bus is busy, it cannot begin a new message until the bus returns to an Idle state.

However, two master devices may try to initiate a transmission on or about the same time. When this occurs, the process of arbitration begins. Each transmitter checks the level of the SDAx data line and compares it to the level that it expects to find. The first transmitter to observe that the two levels don't match, loses arbitration, and must stop transmitting on the SDAx line.

For example, if one transmitter holds the SDAx line to a logical one (lets it float) and a second transmitter holds it to a logical zero (pulls it low), the result is that the SDAx line will be low. The first transmitter then observes that the level of the line is different than expected and concludes that another transmitter is communicating.

The first transmitter to notice this difference is the one that loses arbitration and must stop driving the SDAx line. If this transmitter is also a master device, it also must stop driving the SCLx line. It then can monitor the lines for a Stop condition before trying to reissue its transmission. In the meantime, the other device that has not noticed any difference between the expected and actual levels on the SDAx line continues with its original transmission. It can do so without any complications, because so far, the transmission appears exactly as expected with no other transmitter disturbing the message.

Slave Transmit mode can also be arbitrated, when a master addresses multiple slaves, but this is less common.

If two master devices are sending a message to two different slave devices at the address stage, the master sending the lower slave address always wins arbitration. When two master devices send messages to the same slave address, and addresses can sometimes refer to multiple slaves, the arbitration process must continue into the data stage.

Arbitration usually occurs very rarely, but it is a necessary process for proper multi-master support.

© 2010-2016 Microchip Technology Inc.

15.4 I²C Mode Operation

All MSSPx I²C communication is byte oriented and shifted out MSb first. Six SFR registers and 2 interrupt flags interface the module with the PIC microcontroller and user software. Two pins, SDAx and SCLx, are exercised by the module to communicate with other external I²C devices.

15.4.1 BYTE FORMAT

All communication in I²C is done in 9-bit segments. A byte is sent from a master to a slave or vice-versa, followed by an Acknowledge bit sent back. After the 8th falling edge of the SCLx line, the device outputting data on the SDAx changes that pin to an input and reads in an acknowledge value on the next clock pulse.

The clock signal, SCLx, is provided by the master. Data is valid to change while the SCLx signal is low, and sampled on the rising edge of the clock. Changes on the SDAx line while the SCLx line is high define special conditions on the bus, explained below.

15.4.2 DEFINITION OF I²C TERMINOLOGY

There is language and terminology in the description of I²C communication that have definitions specific to I²C. That word usage is defined below and may be used in the rest of this document without explanation. This table was adapted from the Phillips I²C specification.

TABLE 15-1: I²C BUS TERMS

TERM	Description
Transmitter	The device which shifts data out onto the bus.
Receiver	The device which shifts data in from the bus.
Master	The device that initiates a transfer, generates clock signals and terminates a transfer.
Slave	The device addressed by the master.
Multi-master	A bus with more than one device that can initiate data transfers.
Arbitration	Procedure to ensure that only one master at a time controls the bus. Winning arbitration ensures that the message is not corrupted.
Synchronization	Procedure to synchronize the clocks of two or more devices on the bus.
Idle	No master is controlling the bus, and both SDAx and SCLx lines are high.
Active	Any time one or more master devices are controlling the bus.
Addressed Slave	Slave device that has received a matching address and is actively being clocked by a master.
Matching Address	Address byte that is clocked into a slave that matches the value stored in SSPxADD.
Write Request	Slave receives a matching address with R/$\overline{W}$ bit clear, and is ready to clock in data.
Read Request	Master sends an address byte with the R/$\overline{W}$ bit set, indicating that it wishes to clock data out of the Slave. This data is the next and all following bytes until a Restart or Stop.
Clock Stretching	When a device on the bus holds SCLx low to stall communication.
Bus Collision	Any time the SDAx line is sampled low by the module while it is outputting and expected high state.

15.4.3 SDAx AND SCLx PINS

Selection of any I²C mode with the SSPxEN bit set, forces the SCLx and SDAx pins to be open-drain. These pins should be set by the user to inputs by setting the appropriate TRIS bits.

> **Note:** Data is tied to output zero when an I²C mode is enabled.

15.4.4 SDAx HOLD TIME

The hold time of the SDAx pin is selected by the SDAHT bit of the SSPxCON3 register. Hold time is the time SDAx is held valid after the falling edge of SCLx. Setting the SDAHT bit selects a longer 300 ns minimum hold time and may help on buses with large capacitance.

15.4.5 START CONDITION

The I^{2}C specification defines a Start condition as a transition of SDAx from a high-to -low state while SCLx line is high. A Start condition is always generated by the master and signifies the transition of the bus from an Idle to an active state. Figure 15-12 shows wave forms for Start and Stop conditions.

A bus collision can occur on a Start condition if the module samples the SDAx line low before asserting it low. This does not conform to the I^{2}C specification that states no bus collision can occur on a Start.

15.4.6 STOP CONDITION

A Stop condition is a transition of the SDAx line from a low-to-high state while the SCLx line is high.

> **Note:** At least one SCLx low time must appear before a Stop is valid, therefore, if the SDAx line goes low then high again while the SCLx line stays high, only the Start condition is detected.

15.4.7 RESTART CONDITION

A Restart is valid any time that a Stop would be valid. A master can issue a Restart if it wishes to hold the bus after terminating the current transfer. A Restart has the same effect on the slave that a Start would, resetting all slave logic and preparing it to clock in an address. The master may want to address the same or another slave. Figure 15-13 shows the wave form for a Restart condition.

In 10-bit Addressing Slave mode a Restart is required for the master to clock data out of the addressed slave. Once a slave has been fully addressed, matching both high and low address bytes, the master can issue a Restart and the high address byte with the R/$\overline{W}$ bit set. The slave logic will then hold the clock and prepare to clock out data.

After a full match with R/$\overline{W}$ clear in 10-bit mode, a prior match flag is set and maintained. Until a Stop condition, a high address with R/$\overline{W}$ clear, or high address match fails.

15.4.8 START/STOP CONDITION INTERRUPT MASKING

The SCIE and PCIE bits of the SSPxCON3 register can enable the generation of an interrupt in Slave modes that do not typically support this function. Slave modes where interrupt on Start and Stop detect are already enabled, these bits will have no effect.

FIGURE 15-12: I^{2}C START AND STOP CONDITIONS

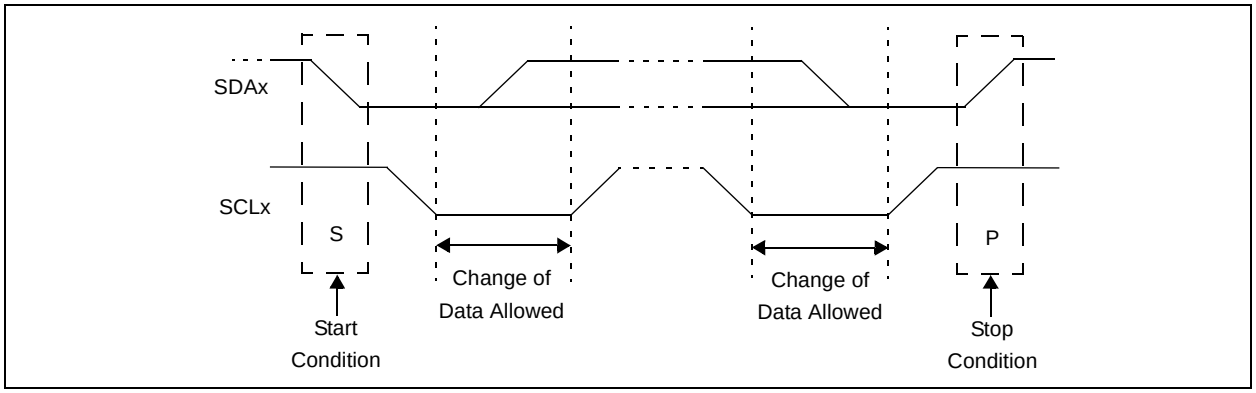

FIGURE 15-13: I^{2}C RESTART CONDITION

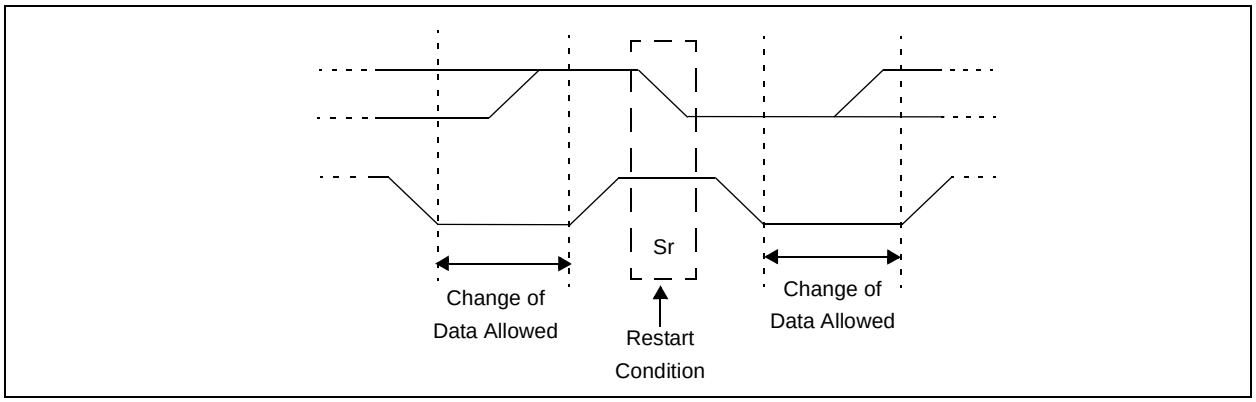

© 2010-2016 Microchip Technology Inc.

15.4.9 ACKNOWLEDGE SEQUENCE

The 9th SCLx pulse for any transferred byte in I^{2}C is dedicated as an Acknowledge. It allows receiving devices to respond back to the transmitter by pulling the SDAx line low. The transmitter must release control of the line during this time to shift in the response. The Acknowledge ($\overline{ACK}$) is an active-low signal, pulling the SDAx line low indicated to the transmitter that the device has received the transmitted data and is ready to receive more.

The result of an $\overline{ACK}$ is placed in the ACKSTAT bit of the SSPxCON2 register.

Slave software, when the AHEN and DHEN bits are set, allow the user to set the $\overline{ACK}$ value sent back to the transmitter. The ACKDT bit of the SSPxCON2 register is set/cleared to determine the response.

Slave hardware will generate an $\overline{ACK}$ response if the AHEN and DHEN bits of the SSPxCON3 register are clear.

There are certain conditions where an $\overline{ACK}$ will not be sent by the slave. If the BF bit of the SSPxSTAT register or the SSPxOV bit of the SSPxCON1 register are set when a byte is received.

When the module is addressed, after the 8th falling edge of SCLx on the bus, the ACKTIM bit of the SSPxCON3 register is set. The ACKTIM bit indicates the acknowledge time of the active bus.

The ACKTIM Status bit is only active when the AHEN bit or DHEN bit is enabled.

15.5 I^{2}C Slave Mode Operation

The MSSPx Slave mode operates in one of four modes selected in the SSPxM bits of SSPxCON1 register. The modes can be divided into 7-bit and 10-bit Addressing mode. 10-bit Addressing modes operate the same as 7-bit with some additional overhead for handling the larger addresses.

Modes with Start and Stop bit interrupts operated the same as the other modes with SSPxIF additionally getting set upon detection of a Start, Restart, or Stop condition.

15.5.1 SLAVE MODE ADDRESSES

The SSPxADD register (Register 15-7) contains the Slave mode address. The first byte received after a Start or Restart condition is compared against the value stored in this register. If the byte matches, the value is loaded into the SSPxBUF register and an interrupt is generated. If the value does not match, the module goes Idle and no indication is given to the software that anything happened.

The SSPx Mask register (Register 15-6) affects the address matching process. See **Section 15.5.9 "SSPx Mask Register"** for more information.

15.5.1.1 I^{2}C Slave 7-bit Addressing Mode

In 7-bit Addressing mode, the LSb of the received data byte is ignored when determining if there is an address match.

15.5.1.2 I^{2}C Slave 10-bit Addressing Mode

In 10-bit Addressing mode, the first received byte is compared to the binary value of '1 1 1 1 0 A9 A8 0'. A9 and A8 are the two MSb of the 10-bit address and stored in bits 2 and 1 of the SSPxADD register.

After the acknowledge of the high byte the UA bit is set and SCLx is held low until the user updates SSPxADD with the low address. The low address byte is clocked in and all eight bits are compared to the low address value in SSPxADD. Even if there is not an address match; SSPxIF and UA are set, and SCLx is held low until SSPxADD is updated to receive a high byte again. When SSPxADD is updated the UA bit is cleared. This ensures the module is ready to receive the high address byte on the next communication.

A high and low address match as a write request is required at the start of all 10-bit addressing communication. A transmission can be initiated by issuing a Restart once the slave is addressed, and clocking in the high address with the R/$\overline{W}$ bit set. The slave hardware will then acknowledge the read request and prepare to clock out data. This is only valid for a slave after it has received a complete high and low address byte match.

15.5.2 SLAVE RECEPTION

When the R/$\overline{W}$ bit of a matching received address byte is clear, the R/$\overline{W}$ bit of the SSPxSTAT register is cleared. The received address is loaded into the SSPxBUF register and acknowledged.

When the overflow condition exists for a received address, then not Acknowledge is given. An overflow condition is defined as either bit BF of the SSPxSTAT register is set, or bit SSPxOV of the SSPxCON1 register is set. The BOEN bit of the SSPxCON3 register modifies this operation. For more information see Register 15-5.

An MSSPx interrupt is generated for each transferred data byte. Flag bit, SSPxIF, must be cleared by software.

When the SEN bit of the SSPxCON2 register is set, SCLx will be held low (clock stretch) following each received byte. The clock must be released by setting the CKP bit of the SSPxCON1 register, except sometimes in 10-bit mode. See **Section 15.2.3 "SPI Master Mode"** for more detail.

15.5.2.1 7-bit Addressing Reception

This section describes a standard sequence of events for the MSSPx module configured as an I^2C slave in 7-bit Addressing mode. All decisions made by hardware or software and their effect on reception. Figure 15-14 and Figure 15-5 are used as a visual reference for this description.

This is a step by step process of what typically must be done to accomplish I^2C communication.

1. Start bit detected.
2. S bit of SSPxSTAT is set; SSPxIF is set if interrupt on Start detect is enabled.
3. Matching address with R/$\overline{W}$ bit clear is received.
4. The slave pulls SDAx low sending an $\overline{ACK}$ to the master, and sets SSPxIF bit.
5. Software clears the SSPxIF bit.
6. Software reads received address from SSPxBUF clearing the BF flag.
7. If SEN = 1; Slave software sets CKP bit to release the SCLx line.
8. The master clocks out a data byte.
9. Slave drives SDAx low sending an $\overline{ACK}$ to the master, and sets SSPxIF bit.
10. Software clears SSPxIF.
11. Software reads the received byte from SSPxBUF clearing BF.
12. Steps 8-12 are repeated for all received bytes from the master.
13. Master sends Stop condition, setting P bit of SSPxSTAT, and the bus goes Idle.

15.5.2.2 7-bit Reception with AHEN and DHEN

Slave device reception with AHEN and DHEN set operate the same as without these options with extra interrupts and clock stretching added after the 8th falling edge of SCLx. These additional interrupts allow the slave software to decide whether it wants to $\overline{ACK}$ the receive address or data byte, rather than the hardware. This functionality adds support for PMBus™ that was not present on previous versions of this module.

This list describes the steps that need to be taken by slave software to use these options for I^2C communication. Figure 15-16 displays a module using both address and data holding. Figure 15-17 includes the operation with the SEN bit of the SSPxCON2 register set.

1. S bit of SSPxSTAT is set; SSPxIF is set if interrupt on Start detect is enabled.
2. Matching address with R/$\overline{W}$ bit clear is clocked in. SSPxIF is set and CKP cleared after the 8th falling edge of SCLx.
3. Slave clears the SSPxIF.
4. Slave can look at the ACKTIM bit of the SSPxCON3 register to determine if the SSPxIF was after or before the $\overline{ACK}$.
5. Slave reads the address value from SSPxBUF, clearing the BF flag.
6. Slave sets $\overline{ACK}$ value clocked out to the master by setting ACKDT.
7. Slave releases the clock by setting CKP.
8. SSPxIF is set after an $\overline{ACK}$, not after a NACK.
9. If SEN = 1 the slave hardware will stretch the clock after the $\overline{ACK}$.
10. Slave clears SSPxIF

.

> **Note:** SSPxIF is still set after the 9th falling edge of SCLx even if there is no clock stretching and BF has been cleared. Only if NACK is sent to master is SSPxIF not set.

11. SSPxIF set and CKP cleared after 8th falling edge of SCLx for a received data byte.
12. Slave looks at ACKTIM bit of SSPxCON3 to determine the source of the interrupt.
13. Slave reads the received data from SSPxBUF clearing BF.
14. Steps 7-14 are the same for each received data byte.
15. Communication is ended by either the slave sending an $\overline{ACK}$ = 1, or the master sending a Stop condition. If a Stop is sent and Interrupt on Stop detect is disabled, the slave will only know by polling the P bit of the SSTSTAT register.

© 2010-2016 Microchip Technology Inc.

FIGURE 15-14: I²C SLAVE, 7-BIT ADDRESS, RECEPTION (SEN = 0, AHEN = 0, DHEN = 0)

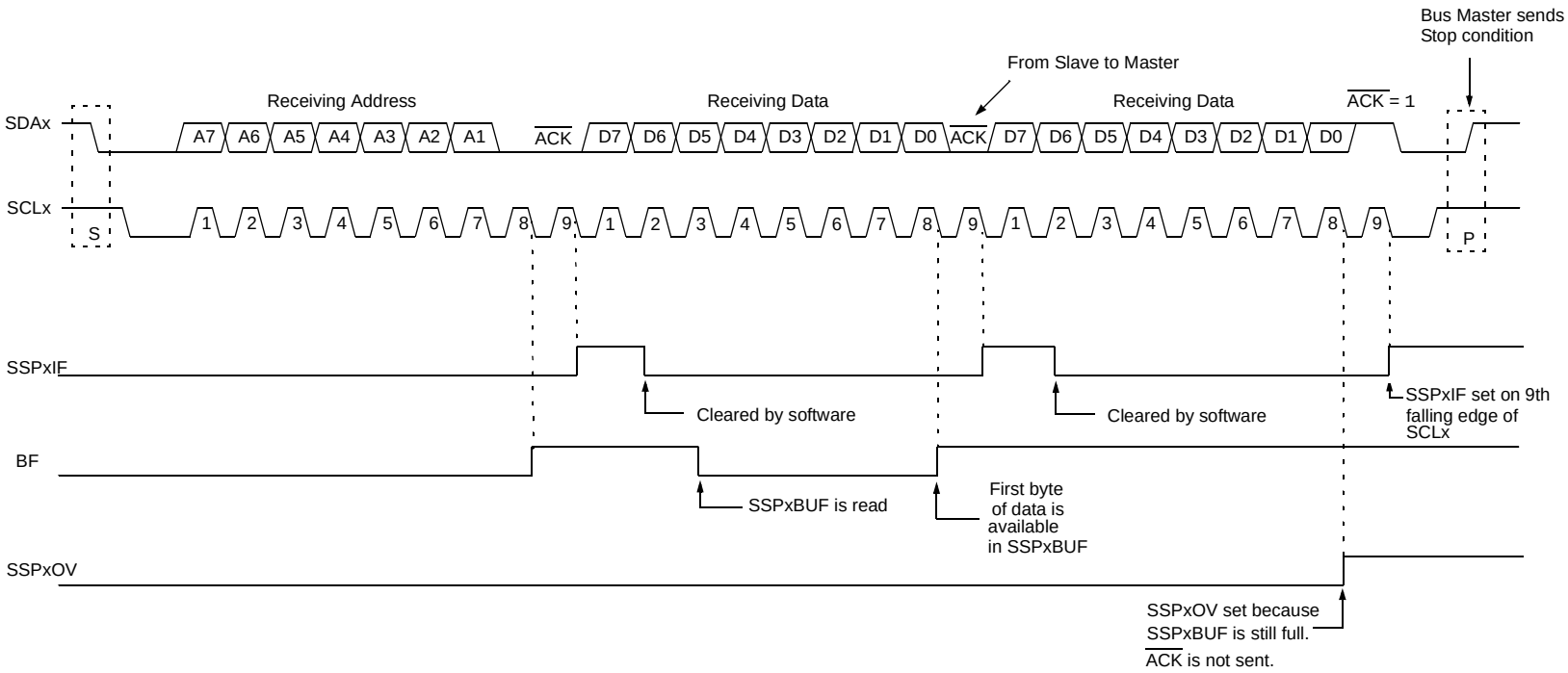

© 2010-2016 Microchip Technology Inc.

FIGURE 15-15: I²C SLAVE, 7-BIT ADDRESS, RECEPTION (SEN = 1, AHEN = 0, DHEN = 0)

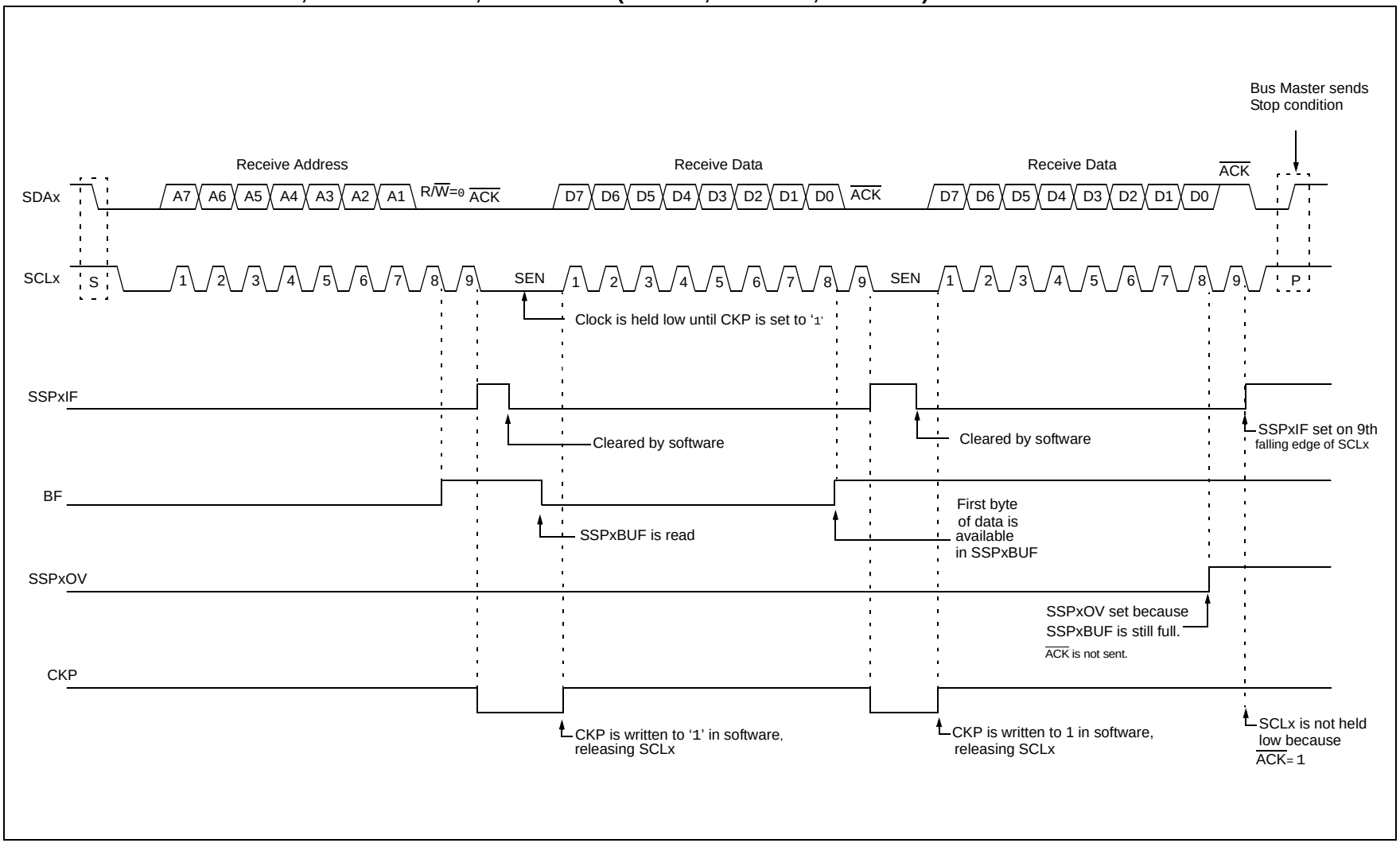

© 2010-2016 Microchip Technology Inc.

FIGURE 15-16: I²C SLAVE, 7-BIT ADDRESS, RECEPTION (SEN = 0, AHEN = 1, DHEN = 1)

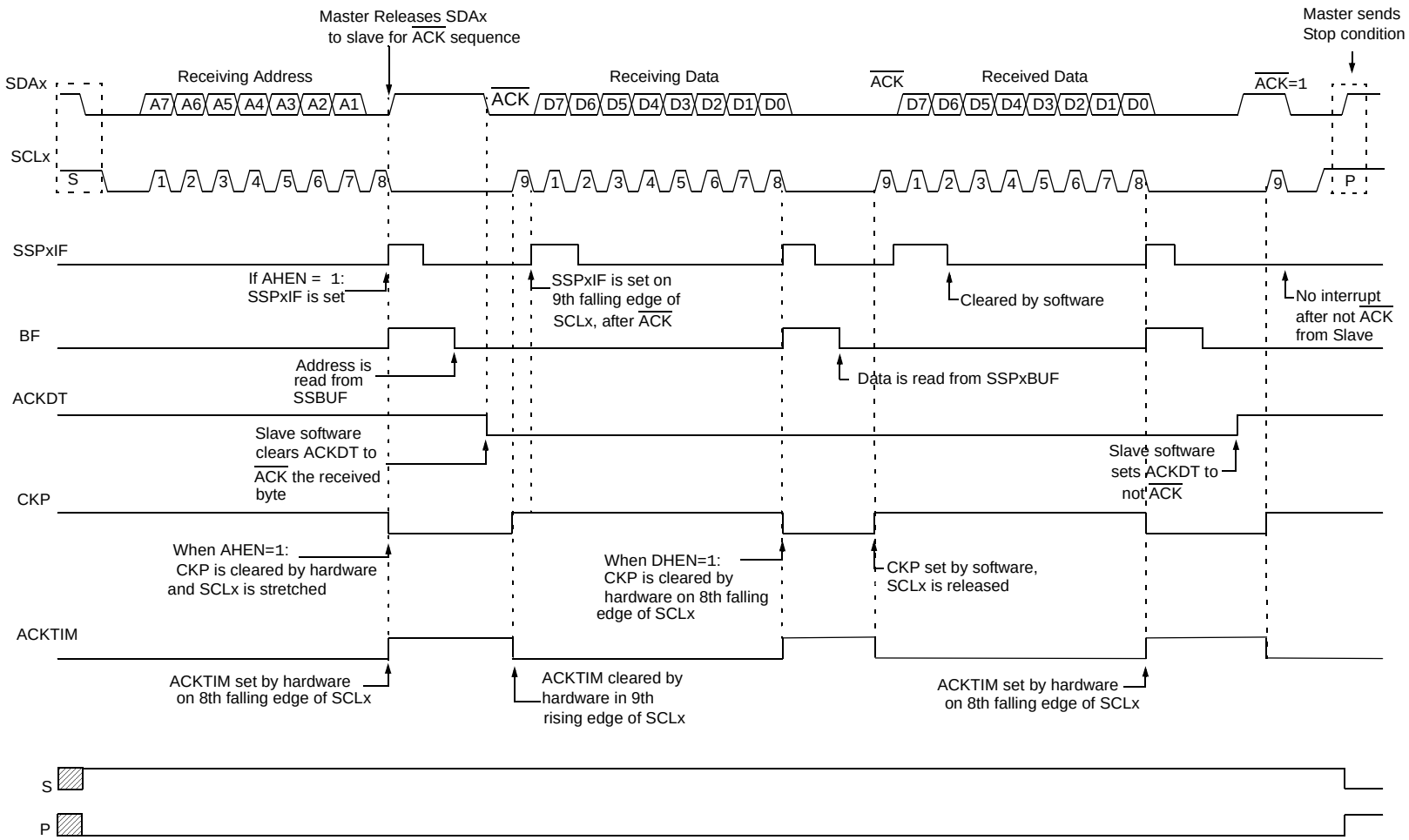

© 2010-2016 Microchip Technology Inc.

FIGURE 15-17: I²C SLAVE, 7-BIT ADDRESS, RECEPTION (SEN = 1, AHEN = 1, DHEN = 1)

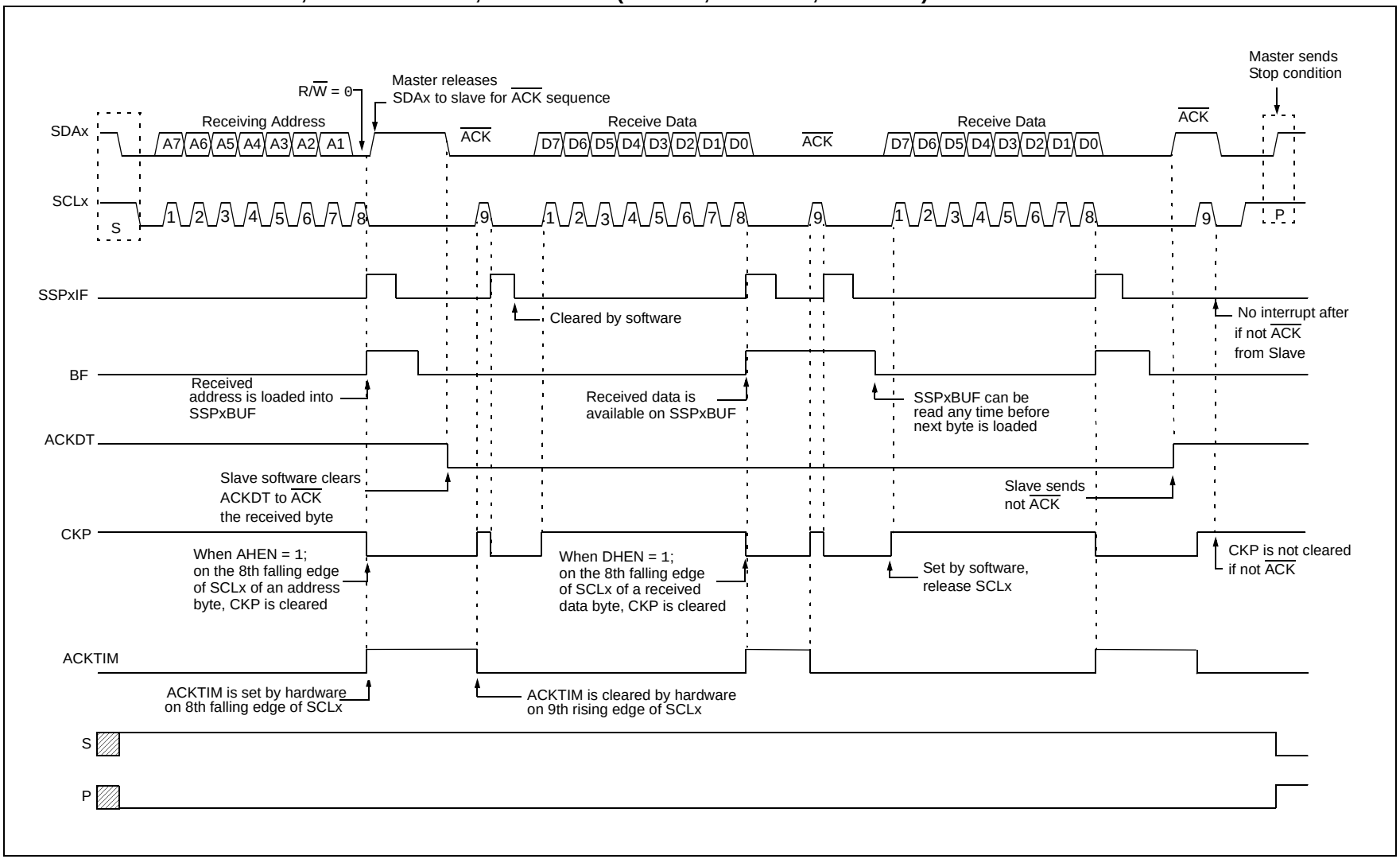

© 2010-2016 Microchip Technology Inc.

15.5.3 SLAVE TRANSMISSION

When the R/$\overline{W}$ bit of the incoming address byte is set and an address match occurs, the R/$\overline{W}$ bit of the SSPxSTAT register is set. The received address is loaded into the SSPxBUF register, and an $\overline{ACK}$ pulse is sent by the slave on the ninth bit.

Following the $\overline{ACK}$, slave hardware clears the CKP bit and the SCLx pin is held low (see **Section 15.5.6 "Clock Stretching"** for more detail). By stretching the clock, the master will be unable to assert another clock pulse until the slave is done preparing the transmit data.

The transmit data must be loaded into the SSPxBUF register which also loads the SSPxSR register. Then the SCLx pin should be released by setting the CKP bit of the SSPxCON1 register. The eight data bits are shifted out on the falling edge of the SCLx input. This ensures that the SDAx signal is valid during the SCLx high time.

The $\overline{ACK}$ pulse from the master-receiver is latched on the rising edge of the ninth SCLx input pulse. This $\overline{ACK}$ value is copied to the ACKSTAT bit of the SSPxCON2 register. If ACKSTAT is set (not $\overline{ACK}$), then the data transfer is complete. In this case, when the not $\overline{ACK}$ is latched by the slave, the slave goes Idle and waits for another occurrence of the Start bit. If the SDAx line was low ($\overline{ACK}$), the next transmit data must be loaded into the SSPxBUF register. Again, the SCLx pin must be released by setting bit CKP.

An MSSPx interrupt is generated for each data transfer byte. The SSPxIF bit must be cleared by software and the SSPxSTAT register is used to determine the status of the byte. The SSPxIF bit is set on the falling edge of the ninth clock pulse.

15.5.3.1 Slave Mode Bus Collision

A slave receives a Read request and begins shifting data out on the SDAx line. If a bus collision is detected and the SBCDE bit of the SSPxCON3 register is set, the BCLxIF bit of the PIRx register is set. Once a bus collision is detected, the slave goes Idle and waits to be addressed again. User software can use the BCLxIF bit to handle a slave bus collision.

15.5.3.2 7-bit Transmission

A master device can transmit a read request to a slave, and then clock data out of the slave. The list below outlines what software for a slave will need to do to accomplish a standard transmission. Figure 15-18 can be used as a reference to this list.

1. Master sends a Start condition on SDAx and SCLx.
2. S bit of SSPxSTAT is set; SSPxIF is set if interrupt on Start detect is enabled.
3. Matching address with R/$\overline{W}$ bit set is received by the slave setting SSPxIF bit.
4. Slave hardware generates an $\overline{ACK}$ and sets SSPxIF.
5. SSPxIF bit is cleared by user.
6. Software reads the received address from SSPxBUF, clearing BF.
7. R/$\overline{W}$ is set so CKP was automatically cleared after the $\overline{ACK}$.
8. The slave software loads the transmit data into SSPxBUF.
9. CKP bit is set releasing SCLx, allowing the master to clock the data out of the slave.
10. SSPxIF is set after the $\overline{ACK}$ response from the master is loaded into the ACKSTAT register.
11. SSPxIF bit is cleared.
12. The slave software checks the ACKSTAT bit to see if the master wants to clock out more data.

> **Note 1:** If the master $\overline{ACK}$s the clock will be stretched.
>
> **2:** ACKSTAT is the only bit updated on the rising edge of SCLx (9th) rather than the falling.

13. Steps 9-13 are repeated for each transmitted byte.
14. If the master sends a not $\overline{ACK}$; the clock is not held, but SSPxIF is still set.
15. The master sends a Restart condition or a Stop.
16. The slave is no longer addressed.

FIGURE 15-18: I²C SLAVE, 7-BIT ADDRESS, TRANSMISSION (AHEN = 0)

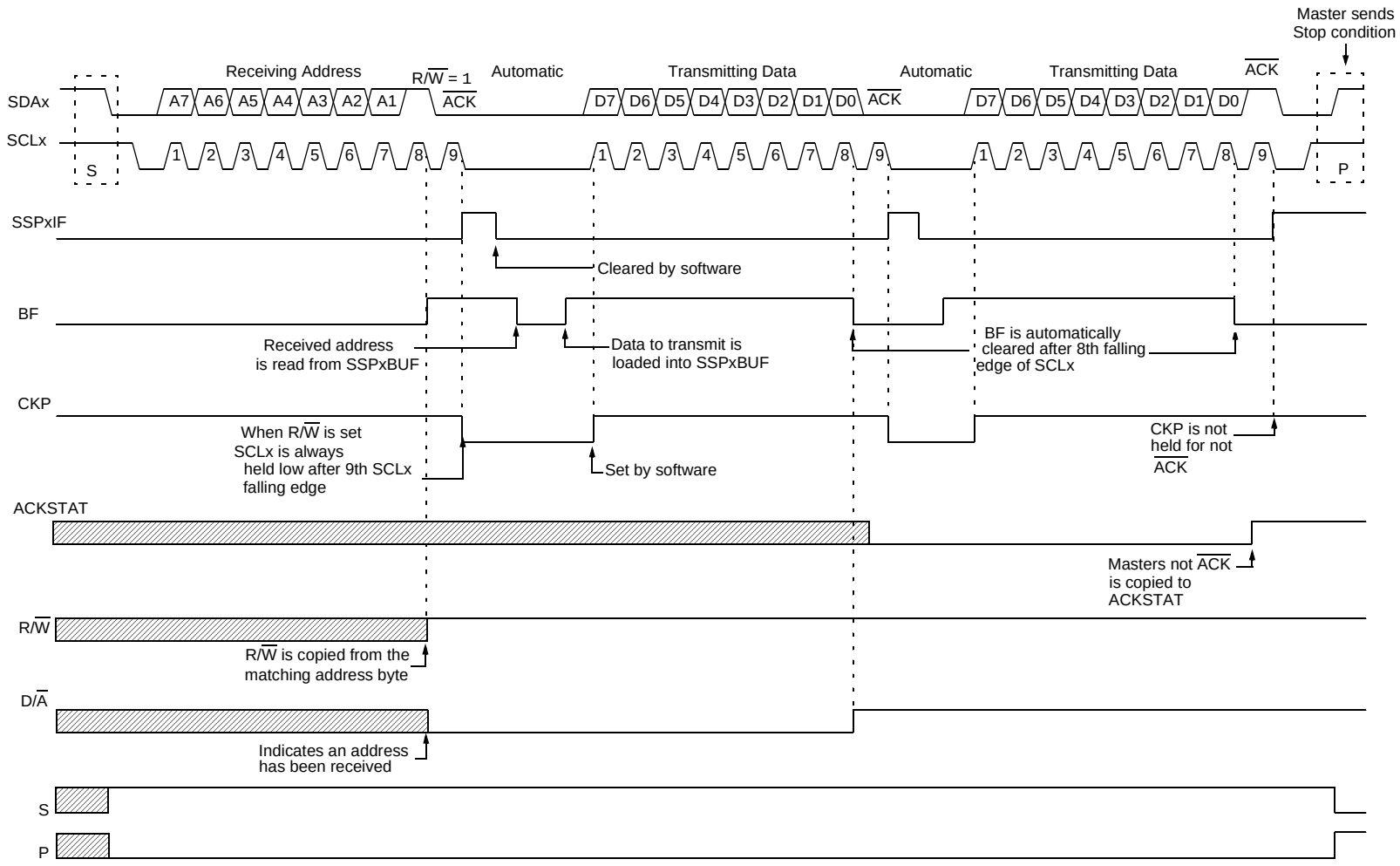

© 2010-2016 Microchip Technology Inc.

15.5.3.3 7-bit Transmission with Address Hold Enabled

Setting the AHEN bit of the SSPxCON3 register enables additional clock stretching and interrupt generation after the 8th falling edge of a received matching address. Once a matching address has been clocked in, CKP is cleared and the SSPxIF interrupt is set.

Figure 15-19 displays a standard waveform of a 7-bit Address Slave Transmission with AHEN enabled.

1. Bus starts Idle.
2. Master sends Start condition; the S bit of SSPxSTAT is set; SSPxIF is set if interrupt on Start detect is enabled.
3. Master sends matching address with R/$\overline{W}$ bit set. After the 8th falling edge of the SCLx line the CKP bit is cleared and SSPxIF interrupt is generated.
4. Slave software clears SSPxIF.
5. Slave software reads ACKTIM bit of SSPxCON3 register, and R/$\overline{W}$ and D/$\overline{A}$ of the SSPxSTAT register to determine the source of the interrupt.
6. Slave reads the address value from the SSPxBUF register clearing the BF bit.
7. Slave software decides from this information if it wishes to $\overline{ACK}$ or not $\overline{ACK}$ and sets ACKDT bit of the SSPxCON2 register accordingly.
8. Slave sets the CKP bit releasing SCLx.
9. Master clocks in the $\overline{ACK}$ value from the slave.
10. Slave hardware automatically clears the CKP bit and sets SSPxIF after the $\overline{ACK}$ if the R/$\overline{W}$ bit is set.
11. Slave software clears SSPxIF.
12. Slave loads value to transmit to the master into SSPxBUF setting the BF bit.

> **Note:** SSPxBUF cannot be loaded until after the $\overline{ACK}$.

13. Slave sets CKP bit releasing the clock.
14. Master clocks out the data from the slave and sends an $\overline{ACK}$ value on the 9th SCLx pulse.
15. Slave hardware copies the $\overline{ACK}$ value into the ACKSTAT bit of the SSPxCON2 register.
16. Steps 10-15 are repeated for each byte transmitted to the master from the slave.
17. If the master sends a not $\overline{ACK}$ the slave releases the bus allowing the master to send a Stop and end the communication.

> **Note:** Master must send a not $\overline{ACK}$ on the last byte to ensure that the slave releases the SCLx line to receive a Stop.

FIGURE 15-19: I²C SLAVE, 7-BIT ADDRESS, TRANSMISSION (AHEN = 1)

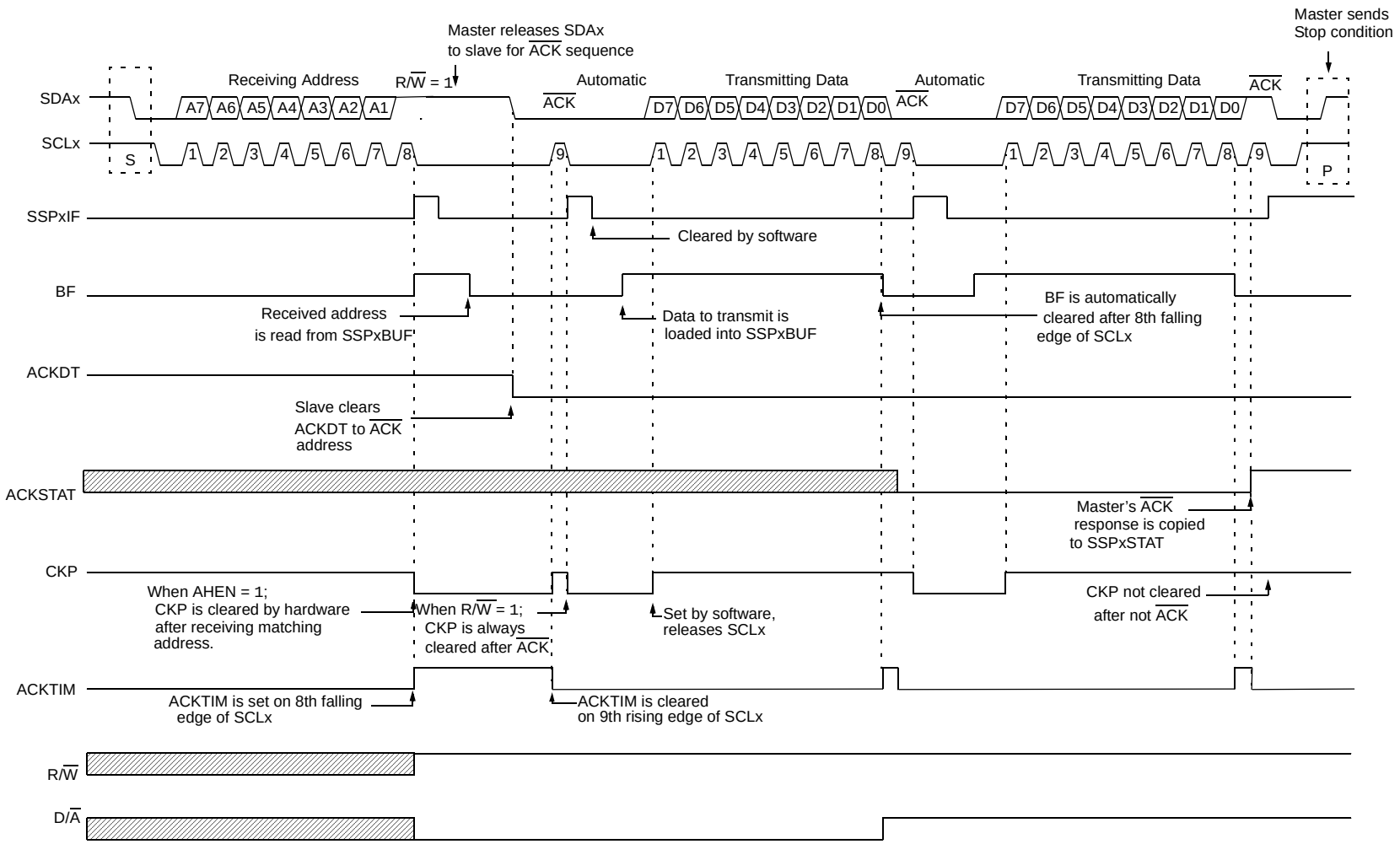

© 2010-2016 Microchip Technology Inc.

15.5.4 SLAVE MODE 10-BIT ADDRESS RECEPTION

This section describes a standard sequence of events for the MSSPx module configured as an I^2C slave in 10-bit Addressing mode (Figure 15-20) and is used as a visual reference for this description.

This is a step by step process of what must be done by slave software to accomplish I^2C communication.

1. Bus starts Idle.
2. Master sends Start condition; S bit of SSPxSTAT is set; SSPxIF is set if interrupt on Start detect is enabled.
3. Master sends matching high address with R/$\overline{W}$ bit clear; UA bit of the SSPxSTAT register is set.
4. Slave sends $\overline{ACK}$ and SSPxIF is set.
5. Software clears the SSPxIF bit.
6. Software reads received address from SSPxBUF clearing the BF flag.
7. Slave loads low address into SSPxADD, releasing SCLx.
8. Master sends matching low address byte to the slave; UA bit is set.

Note:	Updates to the SSPxADD register are not allowed until after the $\overline{ACK}$ sequence.

9. Slave sends $\overline{ACK}$ and SSPxIF is set.

Note:	If the low address does not match, SSPxIF and UA are still set so that the slave software can set SSPxADD back to the high address. BF is not set because there is no match. CKP is unaffected.

10. Slave clears SSPxIF.
11. Slave reads the received matching address from SSPxBUF clearing BF.
12. Slave loads high address into SSPxADD.
13. Master clocks a data byte to the slave and clocks out the slaves $\overline{ACK}$ on the 9th SCLx pulse; SSPxIF is set.
14. If SEN bit of SSPxCON2 is set, CKP is cleared by hardware and the clock is stretched.
15. Slave clears SSPxIF.
16. Slave reads the received byte from SSPxBUF clearing BF.
17. If SEN is set the slave sets CKP to release the SCLx.
18. Steps 13-17 repeat for each received byte.
19. Master sends Stop to end the transmission.

15.5.5 10-BIT ADDRESSING WITH ADDRESS OR DATA HOLD

Reception using 10-bit addressing with AHEN or DHEN set is the same as with 7-bit modes. The only difference is the need to update the SSPxADD register using the UA bit. All functionality, specifically when the CKP bit is cleared and SCLx line is held low are the same. Figure 15-21 can be used as a reference of a slave in 10-bit addressing with AHEN set.

Figure 15-22 shows a standard waveform for a slave transmitter in 10-bit Addressing mode.

FIGURE 15-20: I²C SLAVE, 10-BIT ADDRESS, RECEPTION (SEN = 1, AHEN = 0, DHEN = 0)

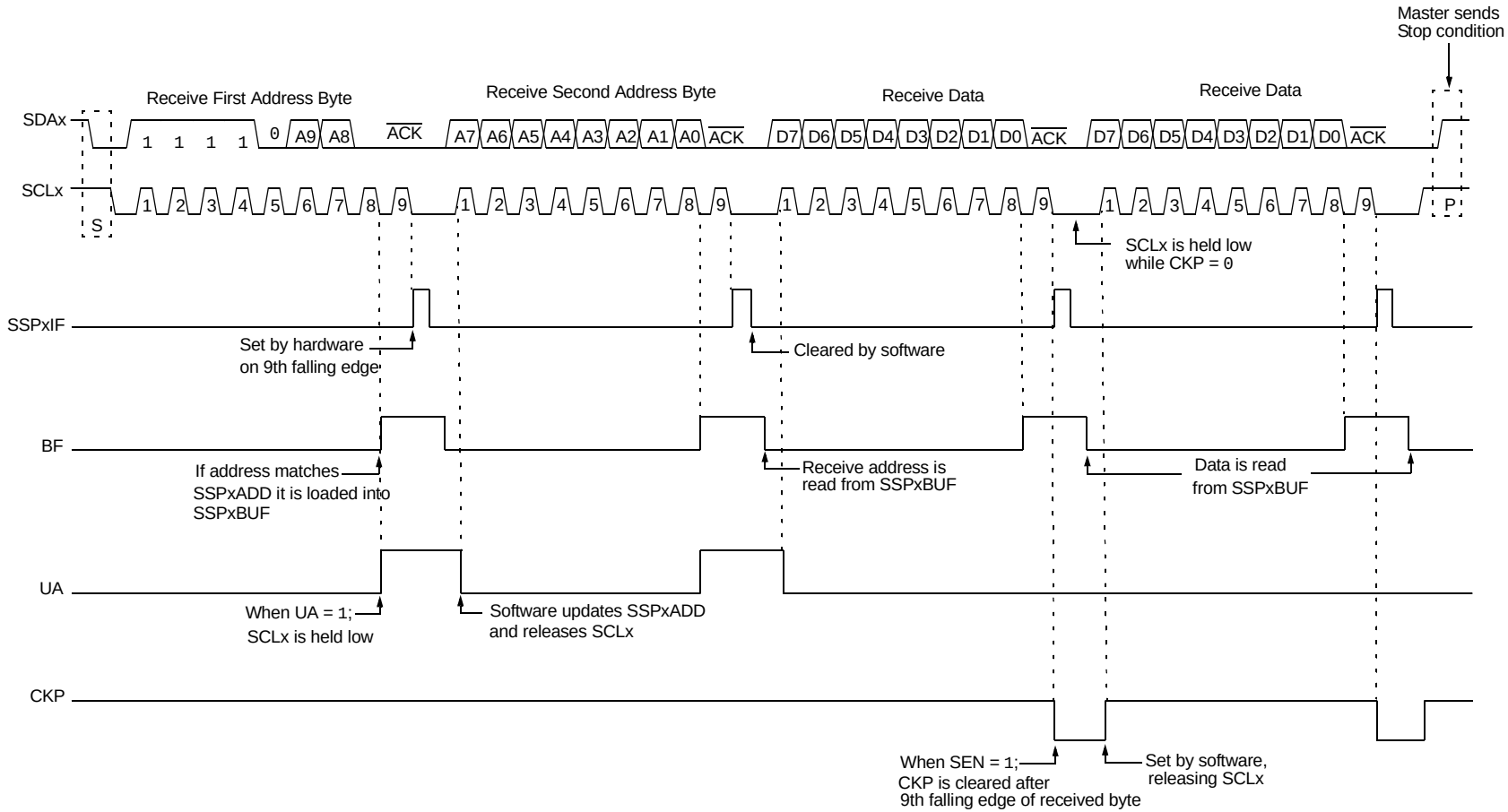

© 2010-2016 Microchip Technology Inc.

FIGURE 15-21: I²C SLAVE, 10-BIT ADDRESS, RECEPTION (SEN = 0, AHEN = 1, DHEN = 0)

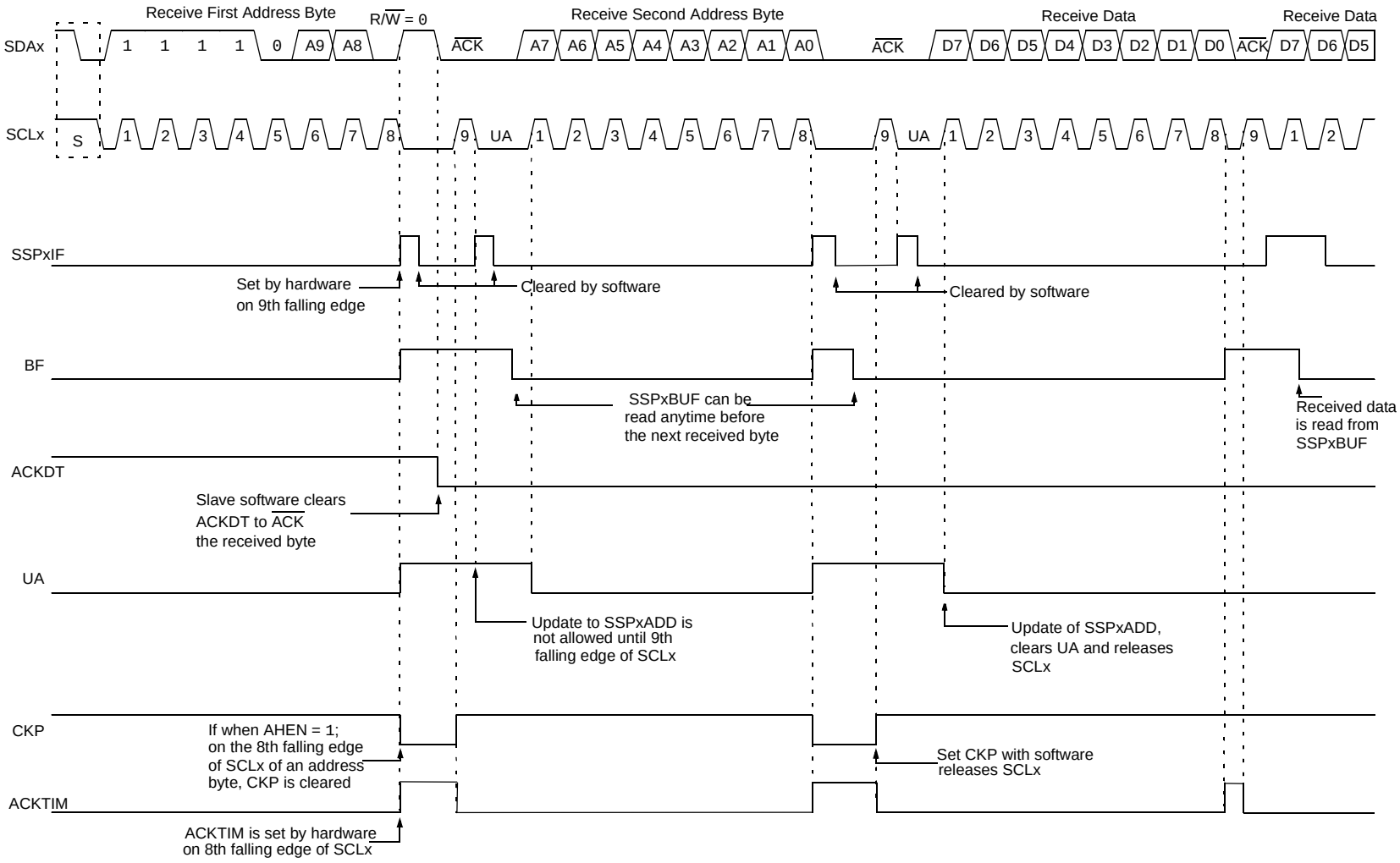

© 2010-2016 Microchip Technology Inc.

FIGURE 15-22: I²C SLAVE, 10-BIT ADDRESS, TRANSMISSION (SEN = 0, AHEN = 0, DHEN = 0)

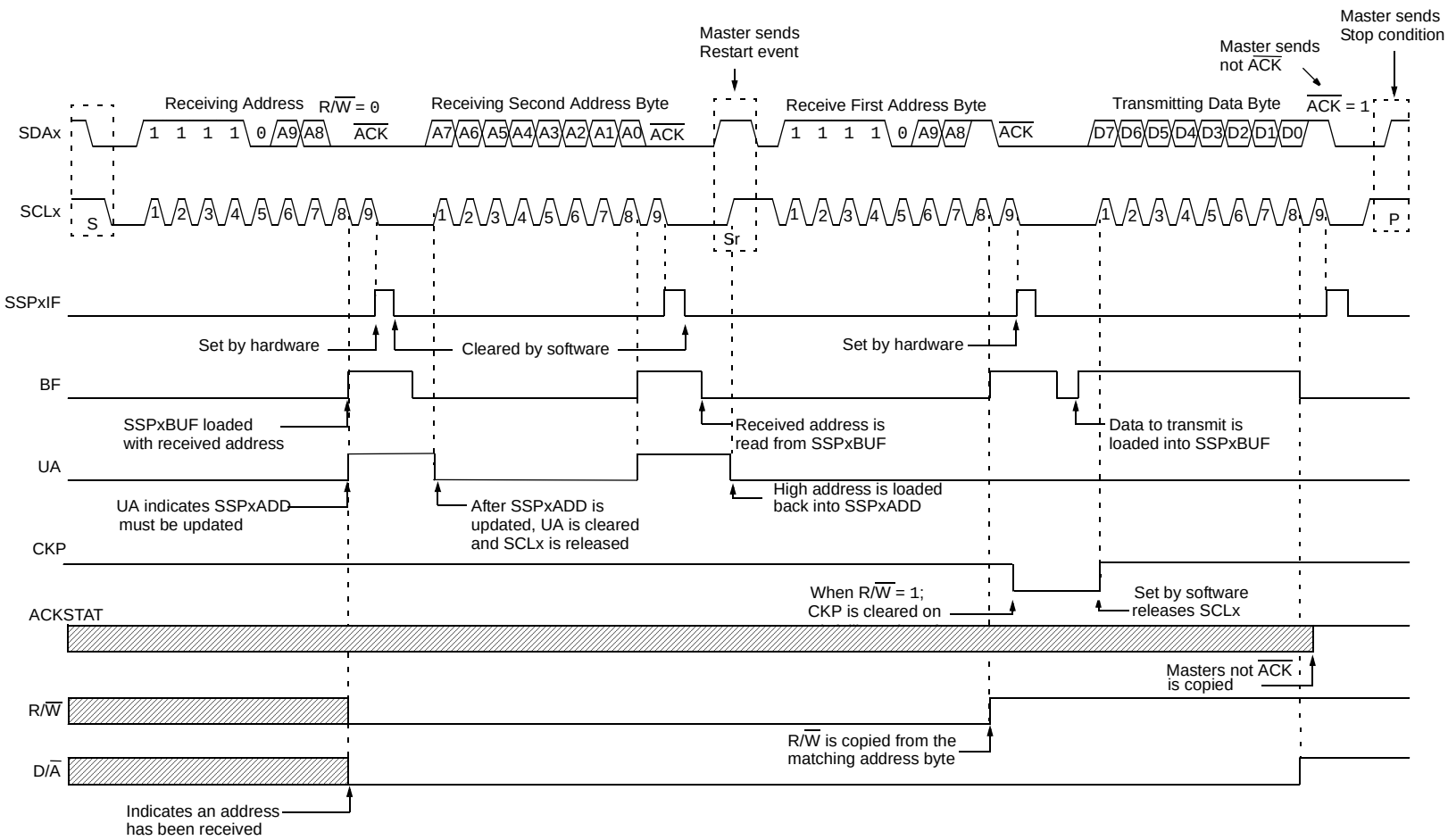

© 2010-2016 Microchip Technology Inc.

15.5.6 CLOCK STRETCHING

Clock stretching occurs when a device on the bus holds the SCLx line low effectively pausing communication. The slave may stretch the clock to allow more time to handle data or prepare a response for the master device. A master device is not concerned with stretching as anytime it is active on the bus and not transferring data it is stretching. Any stretching done by a slave is invisible to the master software and handled by the hardware that generates SCLx.

The CKP bit of the SSPxCON1 register is used to control stretching in software. Any time the CKP bit is cleared, the module will wait for the SCLx line to go low and then hold it. Setting CKP will release SCLx and allow more communication.

15.5.6.1 Normal Clock Stretching

Following an $\overline{\text{ACK}}$ if the R/$\overline{\text{W}}$ bit of SSPxSTAT is set, a read request, the slave hardware will clear CKP. This allows the slave time to update SSPxBUF with data to transfer to the master. If the SEN bit of SSPxCON2 is set, the slave hardware will always stretch the clock after the $\overline{\text{ACK}}$ sequence. Once the slave is ready; CKP is set by software and communication resumes.

> **Note 1:** The BF bit has no effect on whether the clock will be stretched or not. This is different than previous versions of the module that would not stretch the clock, clear CKP, if SSPxBUF was read before the 9th falling edge of SCLx.
>
> **2:** Previous versions of the module did not stretch the clock for a transmission if SSPxBUF was loaded before the 9th falling edge of SCLx. It is now always cleared for read requests.

15.5.6.2 10-bit Addressing Mode

In 10-bit Addressing mode, when the UA bit is set, the clock is always stretched. This is the only time the SCLx is stretched without CKP being cleared. SCLx is released immediately after a write to SSPxADD.

> **Note:** Previous versions of the module did not stretch the clock if the second address byte did not match.

15.5.6.3 Byte NACKing

When the AHEN bit of SSPxCON3 is set; CKP is cleared by hardware after the 8th falling edge of SCLx for a received matching address byte. When the DHEN bit of SSPxCON3 is set; CKP is cleared after the 8th falling edge of SCLx for received data.

Stretching after the 8th falling edge of SCLx allows the slave to look at the received address or data and decide if it wants to ACK the received data.

15.5.7 CLOCK SYNCHRONIZATION AND THE CKP BIT

Any time the CKP bit is cleared, the module will wait for the SCLx line to go low and then hold it. However, clearing the CKP bit will not assert the SCLx output low until the SCLx output is already sampled low. Therefore, the CKP bit will not assert the SCLx line until an external I^2C master device has already asserted the SCLx line. The SCLx output will remain low until the CKP bit is set and all other devices on the I^2C bus have released SCLx. This ensures that a write to the CKP bit will not violate the minimum high time requirement for SCLx (see Figure 15-23).

FIGURE 15-23: CLOCK SYNCHRONIZATION TIMING

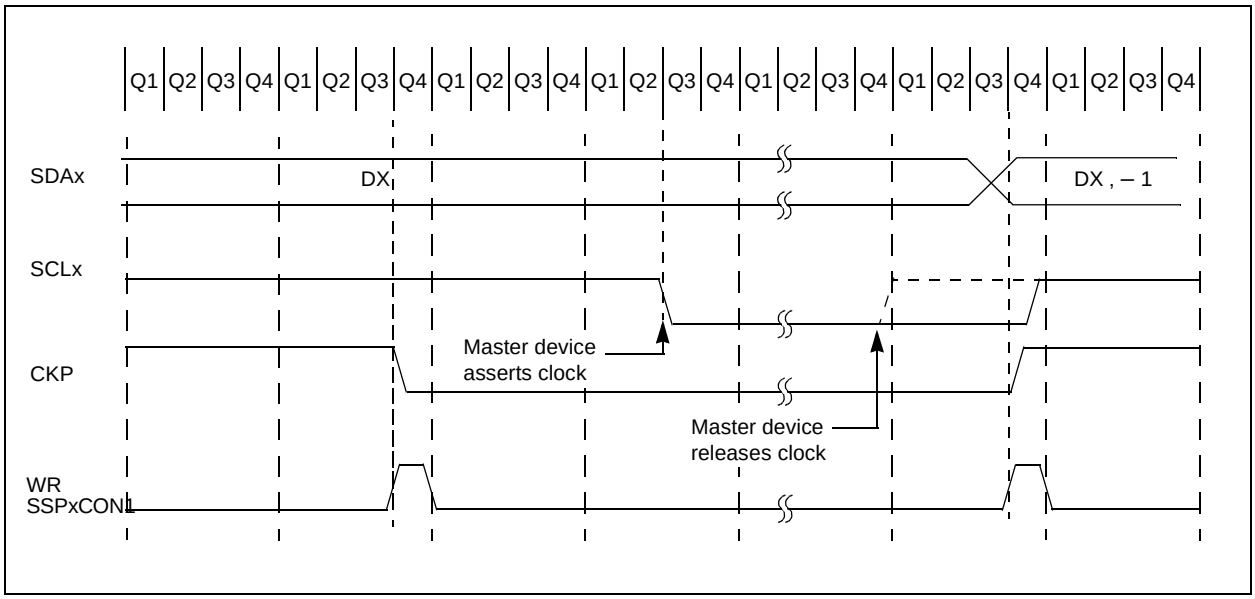

15.5.8 GENERAL CALL ADDRESS SUPPORT

The addressing procedure for the I^{2}C bus is such that the first byte after the Start condition usually determines which device will be the slave addressed by the master device. The exception is the general call address which can address all devices. When this address is used, all devices should, in theory, respond with an acknowledge.

The general call address is a reserved address in the I^{2}C protocol, defined as address 0x00. When the GCEN bit of the SSPxCON2 register is set, the slave module will automatically $\overline{\text{ACK}}$ the reception of this address regardless of the value stored in SSPxADD. After the slave clocks in an address of all zeros with the R/$\overline{\text{W}}$ bit clear, an interrupt is generated and slave software can read SSPxBUF and respond. Figure 15-24 shows a general call reception sequence.

In 10-bit Address mode, the UA bit will not be set on the reception of the general call address. The slave will prepare to receive the second byte as data, just as it would in 7-bit mode.

If the AHEN bit of the SSPxCON3 register is set, just as with any other address reception, the slave hardware will stretch the clock after the 8th falling edge of SCLx. The slave must then set its ACKDT value and release the clock with communication progressing as it would normally.

FIGURE 15-24: SLAVE MODE GENERAL CALL ADDRESS SEQUENCE

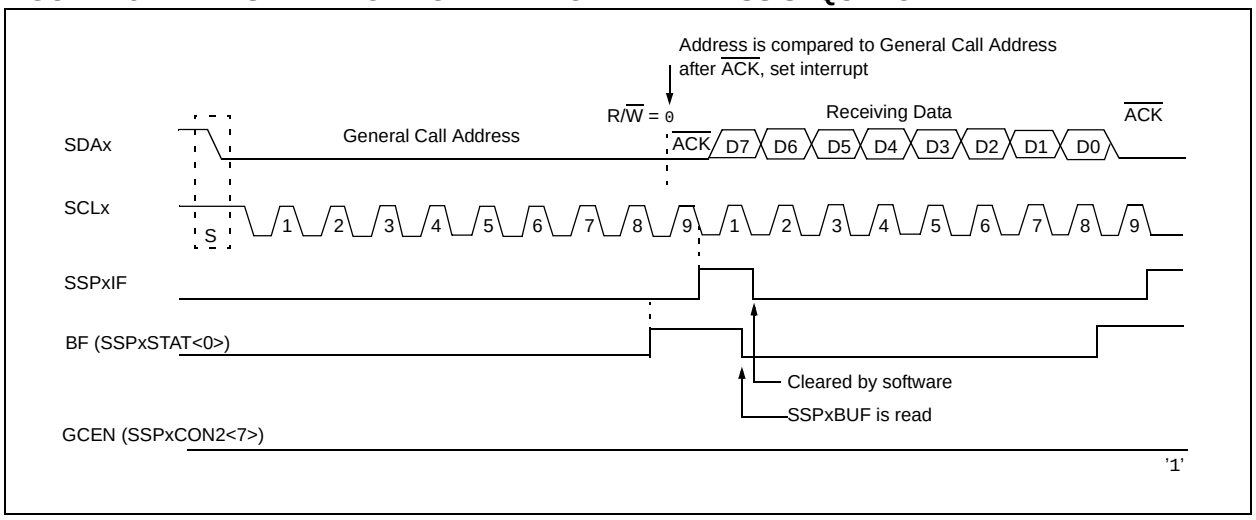

15.5.9 SSPx MASK REGISTER

An SSPx Mask (SSPxMSK) register (Register 15-6) is available in I^{2}C Slave mode as a mask for the value held in the SSPxSR register during an address comparison operation. A zero ('0') bit in the SSPxMSK register has the effect of making the corresponding bit of the received address a "don't care".

This register is reset to all '1's upon any Reset condition and, therefore, has no effect on standard SSPx operation until written with a mask value.

The SSPx Mask register is active during:

- 7-bit Address mode: address compare of A<7:1>.
- 10-bit Address mode: address compare of A<7:0> only. The SSPx mask has no effect during the reception of the first (high) byte of the address.

© 2010-2016 Microchip Technology Inc.

15.6 I²C Master Mode

Master mode is enabled by setting and clearing the appropriate SSPxM bits in the SSPxCON1 register and by setting the SSPxEN bit. In Master mode, the SCLx and SDAx lines are set as inputs and are manipulated by the MSSPx hardware.

Master mode of operation is supported by interrupt generation on the detection of the Start and Stop conditions. The Stop (P) and Start (S) bits are cleared from a Reset or when the MSSPx module is disabled. Control of the I²C bus may be taken when the P bit is set, or the bus is Idle.

In Firmware Controlled Master mode, user code conducts all I²C bus operations based on Start and Stop bit condition detection. Start and Stop condition detection is the only active circuitry in this mode. All other communication is done by the user software directly manipulating the SDAx and SCLx lines.

The following events will cause the SSPx Interrupt Flag bit, SSPxIF, to be set (SSPx interrupt, if enabled):

- Start condition detected
- Stop condition detected
- Data transfer byte transmitted/received
- Acknowledge transmitted/received
- Repeated Start generated

Note 1: The MSSPx module, when configured in I²C Master mode, does not allow queueing of events. For instance, the user is not allowed to initiate a Start condition and immediately write the SSPxBUF register to initiate transmission before the Start condition is complete. In this case, the SSPxBUF will not be written to and the WCOL bit will be set, indicating that a write to the SSPxBUF did not occur

2: When in Master mode, Start/Stop detection is masked and an interrupt is generated when the SEN/PEN bit is cleared and the generation is complete.

15.6.1 I²C MASTER MODE OPERATION

The master device generates all of the serial clock pulses and the Start and Stop conditions. A transfer is ended with a Stop condition or with a Repeated Start condition. Since the Repeated Start condition is also the beginning of the next serial transfer, the I²C bus will not be released.

In Master Transmitter mode, serial data is output through SDAx, while SCLx outputs the serial clock. The first byte transmitted contains the slave address of the receiving device (7 bits) and the Read/Write (R/$\overline{W}$) bit. In this case, the R/$\overline{W}$ bit will be logic ‘0’. Serial data is transmitted eight bits at a time. After each byte is transmitted, an Acknowledge bit is received. Start and Stop conditions are output to indicate the beginning and the end of a serial transfer.

In Master Receive mode, the first byte transmitted contains the slave address of the transmitting device (7 bits) and the R/$\overline{W}$ bit. In this case, the R/$\overline{W}$ bit will be logic ‘1’. Thus, the first byte transmitted is a 7-bit slave address followed by a ‘1’ to indicate the receive bit. Serial data is received via SDAx, while SCLx outputs the serial clock. Serial data is received eight bits at a time. After each byte is received, an Acknowledge bit is transmitted. Start and Stop conditions indicate the beginning and end of transmission.

A Baud Rate Generator is used to set the clock frequency output on SCLx. See **Section 15.7 “Baud Rate Generator”** for more detail.

15.6.2 CLOCK ARBITRATION

Clock arbitration occurs when the master, during any receive, transmit or Repeated Start/Stop condition, releases the SCLx pin (SCLx allowed to float high). When the SCLx pin is allowed to float high, the Baud Rate Generator (BRG) is suspended from counting until the SCLx pin is actually sampled high. When the SCLx pin is sampled high, the Baud Rate Generator is reloaded with the contents of SSPxADD<7:0> and begins counting. This ensures that the SCLx high time will always be at least one BRG rollover count in the event that the clock is held low by an external device (Figure 15-25).

FIGURE 15-25: BAUD RATE GENERATOR TIMING WITH CLOCK ARBITRATION

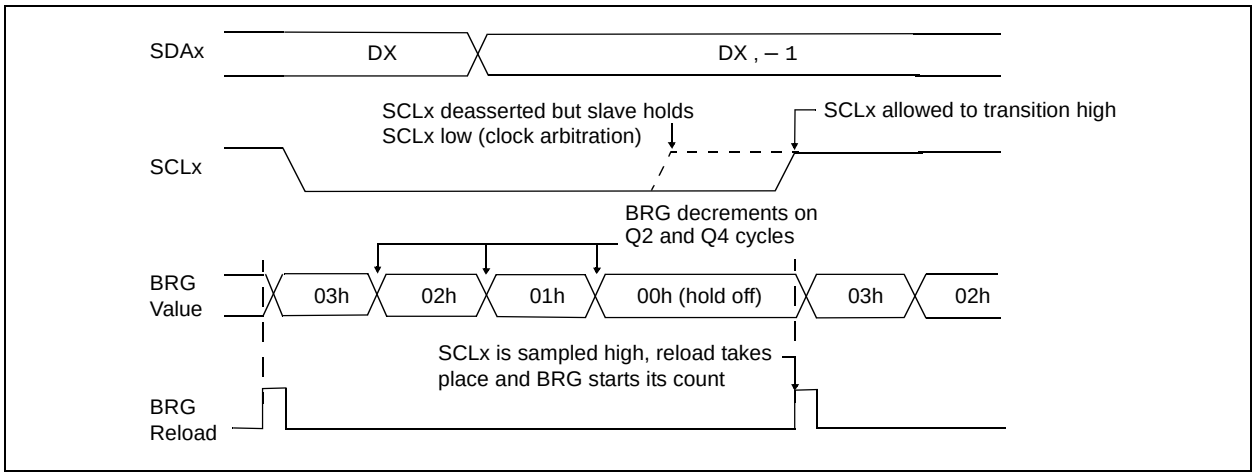

15.6.3 WCOL STATUS FLAG

If the user writes the SSPxBUF when a Start, Restart, Stop, Receive or Transmit sequence is in progress, the WCOL is set and the contents of the buffer are unchanged (the write does not occur). Any time the WCOL bit is set it indicates that an action on SSPxBUF was attempted while the module was not Idle.

Note:	Because queueing of events is not allowed, writing to the lower 5 bits of SSPxCON2 is disabled until the Start condition is complete.

© 2010-2016 Microchip Technology Inc.

15.6.4 I²C MASTER MODE START CONDITION TIMING

To initiate a Start condition (Figure 15-26), the user sets the Start Enable bit, SEN, of the SSPxCON2 register. If the SDAx and SCLx pins are sampled high, the Baud Rate Generator is reloaded with the contents of SSPxADD<7:0> and starts its count. If SCLx and SDAx are both sampled high when the Baud Rate Generator times out (TBRG), the SDAx pin is driven low. The action of the SDAx being driven low while SCLx is high is the Start condition and causes the S bit of the SSPxSTAT1 register to be set. Following this, the Baud Rate Generator is reloaded with the contents of SSPxADD<7:0> and resumes its count.

When the Baud Rate Generator times out (TBRG), the SEN bit of the SSPxCON2 register will be automatically cleared by hardware; the Baud Rate Generator is suspended, leaving the SDAx line held low and the Start condition is complete.

Note 1: If at the beginning of the Start condition, the SDAx and SCLx pins are already sampled low, or if during the Start condition, the SCLx line is sampled low before the SDAx line is driven low, a bus collision occurs, the Bus Collision Interrupt Flag, BCLxIF, is set, the Start condition is aborted and the I²C module is reset into its Idle state.

2: The Philips I²C Specification states that a bus collision cannot occur on a Start.

FIGURE 15-26: FIRST START BIT TIMING

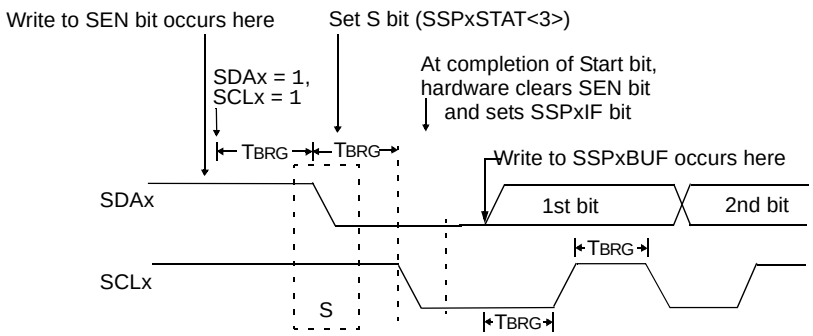

15.6.5 I²C MASTER MODE REPEATED START CONDITION TIMING

A Repeated Start condition (Figure 15-27) occurs when the RSEN bit of the SSPxCON2 register is programmed high and the master state machine is no longer active. When the RSEN bit is set, the SCLx pin is asserted low. When the SCLx pin is sampled low, the Baud Rate Generator is loaded and begins counting. The SDAx pin is released (brought high) for one Baud Rate Generator count (TBRG). When the Baud Rate Generator times out, if SDAx is sampled high, the SCLx pin will be deasserted (brought high). When SCLx is sampled high, the Baud Rate Generator is reloaded and begins counting. SDAx and SCLx must be sampled high for one TBRG. This action is then followed by assertion of the SDAx pin (SDAx = 0) for one TBRG while SCLx is high. SCLx is asserted low.

Following this, the RSEN bit of the SSPxCON2 register will be automatically cleared and the Baud Rate Generator will not be reloaded, leaving the SDAx pin held low. As soon as a Start condition is detected on the SDAx and SCLx pins, the S bit of the SSPxSTAT register will be set. The SSPxIF bit will not be set until the Baud Rate Generator has timed out.

Note 1: If RSEN is programmed while any other event is in progress, it will not take effect.

2: A bus collision during the Repeated Start condition occurs if:

- SDAx is sampled low when SCLx goes from low-to-high.
- SCLx goes low before SDAx is asserted low. This may indicate that another master is attempting to transmit a data '1'.

FIGURE 15-27: REPEAT START CONDITION WAVEFORM

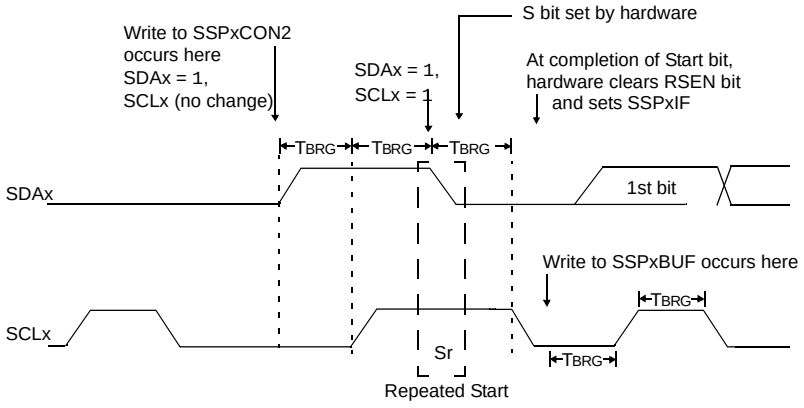

© 2010-2016 Microchip Technology Inc.

15.6.6 I^{2}C MASTER MODE TRANSMISSION

Transmission of a data byte, a 7-bit address or the other half of a 10-bit address is accomplished by simply writing a value to the SSPxBUF register. This action will set the Buffer Full flag bit, BF, and allow the Baud Rate Generator to begin counting and start the next transmission. Each bit of address/data will be shifted out onto the SDAx pin after the falling edge of SCLx is asserted. SCLx is held low for one Baud Rate Generator rollover count (TBRG). Data should be valid before SCLx is released high. When the SCLx pin is released high, it is held that way for TBRG. The data on the SDAx pin must remain stable for that duration and some hold time after the next falling edge of SCLx. After the eighth bit is shifted out (the falling edge of the eighth clock), the BF flag is cleared and the master releases SDAx. This allows the slave device being addressed to respond with an $\overline{ACK}$ bit during the ninth bit time if an address match occurred, or if data was received properly. The status of $\overline{ACK}$ is written into the ACKSTAT bit on the rising edge of the ninth clock. If the master receives an Acknowledge, the Acknowledge Status bit, ACKSTAT, is cleared. If not, the bit is set. After the ninth clock, the SSPxIF bit is set and the master clock (Baud Rate Generator) is suspended until the next data byte is loaded into the SSPxBUF, leaving SCLx low and SDAx unchanged (Figure 15-28).

After the write to the SSPxBUF, each bit of the address will be shifted out on the falling edge of SCLx until all seven address bits and the R/$\overline{W}$ bit are completed. On the falling edge of the eighth clock, the master will release the SDAx pin, allowing the slave to respond with an Acknowledge. On the falling edge of the ninth clock, the master will sample the SDAx pin to see if the address was recognized by a slave. The status of the $\overline{ACK}$ bit is loaded into the ACKSTAT Status bit of the SSPxCON2 register. Following the falling edge of the ninth clock transmission of the address, the SSPxIF is set, the BF flag is cleared and the Baud Rate Generator is turned off until another write to the SSPxBUF takes place, holding SCLx low and allowing SDAx to float.

15.6.6.1 BF Status Flag

In Transmit mode, the BF bit of the SSPxSTAT register is set when the CPU writes to SSPxBUF and is cleared when all 8 bits are shifted out.

15.6.6.2 WCOL Status Flag

If the user writes the SSPxBUF when a transmit is already in progress (i.e., SSPxSR is still shifting out a data byte), the WCOL is set and the contents of the buffer are unchanged (the write does not occur).

WCOL must be cleared by software before the next transmission.

15.6.6.3 ACKSTAT Status Flag

In Transmit mode, the ACKSTAT bit of the SSPxCON2 register is cleared when the slave has sent an Acknowledge ($\overline{ACK}$ = 0) and is set when the slave does not Acknowledge ($\overline{ACK}$ = 1). A slave sends an Acknowledge when it has recognized its address (including a general call), or when the slave has properly received its data.

15.6.6.4 Typical Transmit Sequence:

1. The user generates a Start condition by setting the SEN bit of the SSPxCON2 register.
2. SSPxIF is set by hardware on completion of the Start.
3. SSPxIF is cleared by software.
4. The MSSPx module will wait the required start time before any other operation takes place.
5. The user loads the SSPxBUF with the slave address to transmit.
6. Address is shifted out the SDAx pin until all eight bits are transmitted. Transmission begins as soon as SSPxBUF is written to.
7. The MSSPx module shifts in the $\overline{ACK}$ bit from the slave device and writes its value into the ACKSTAT bit of the SSPxCON2 register.
8. The MSSPx module generates an interrupt at the end of the ninth clock cycle by setting the SSPxIF bit.
9. The user loads the SSPxBUF with eight bits of data.
10. Data is shifted out the SDAx pin until all eight bits are transmitted.
11. The MSSPx module shifts in the $\overline{ACK}$ bit from the slave device and writes its value into the ACKSTAT bit of the SSPxCON2 register.
12. Steps 8-11 are repeated for all transmitted data bytes.
13. The user generates a Stop or Restart condition by setting the PEN or RSEN bits of the SSPxCON2 register. Interrupt is generated once the Stop/Restart condition is complete.

FIGURE 15-28: I²C MASTER MODE WAVEFORM (TRANSMISSION, 7 OR 10-BIT ADDRESS)

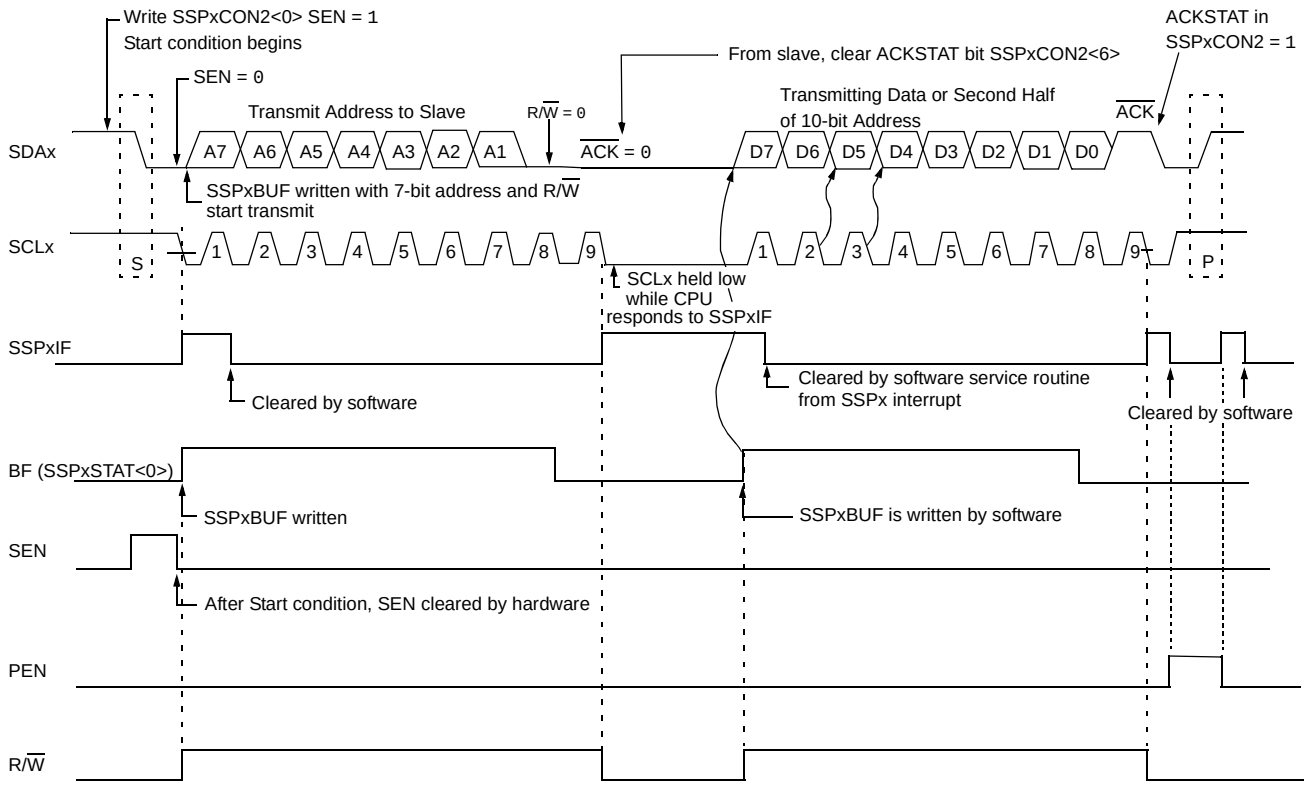

© 2010-2016 Microchip Technology Inc.

15.6.7 I^{2}C MASTER MODE RECEPTION

Master mode reception (Figure 15-29) is enabled by programming the Receive Enable bit, RCEN, of the SSPxCON2 register.

Note:	The MSSPx module must be in an Idle state before the RCEN bit is set or the RCEN bit will be disregarded.

The Baud Rate Generator begins counting and on each rollover, the state of the SCLx pin changes (high-to-low/low-to-high) and data is shifted into the SSPxSR. After the falling edge of the eighth clock, the receive enable flag is automatically cleared, the contents of the SSPxSR are loaded into the SSPxBUF, the BF flag bit is set, the SSPxIF flag bit is set and the Baud Rate Generator is suspended from counting, holding SCLx low. The MSSPx is now in Idle state awaiting the next command. When the buffer is read by the CPU, the BF flag bit is automatically cleared. The user can then send an Acknowledge bit at the end of reception by setting the Acknowledge Sequence Enable bit, ACKEN, of the SSPxCON2 register.

15.6.7.1 BF Status Flag

In receive operation, the BF bit is set when an address or data byte is loaded into SSPxBUF from SSPxSR. It is cleared when the SSPxBUF register is read.

15.6.7.2 SSPxOV Status Flag

In receive operation, the SSPxOV bit is set when eight bits are received into the SSPxSR and the BF flag bit is already set from a previous reception.

15.6.7.3 WCOL Status Flag

If the user writes the SSPxBUF when a receive is already in progress (i.e., SSPxSR is still shifting in a data byte), the WCOL bit is set and the contents of the buffer are unchanged (the write does not occur).

15.6.7.4 Typical Receive Sequence:

1. The user generates a Start condition by setting the SEN bit of the SSPxCON2 register.
2. SSPxIF is set by hardware on completion of the Start.
3. SSPxIF is cleared by software.
4. User writes SSPxBUF with the slave address to transmit and the R/$\overline{W}$ bit set.
5. Address is shifted out the SDAx pin until all eight bits are transmitted. Transmission begins as soon as SSPxBUF is written to.
6. The MSSPx module shifts in the $\overline{ACK}$ bit from the slave device and writes its value into the ACKSTAT bit of the SSPxCON2 register.
7. The MSSPx module generates an interrupt at the end of the ninth clock cycle by setting the SSPxIF bit.
8. User sets the RCEN bit of the SSPxCON2 register and the Master clocks in a byte from the slave.
9. After the 8th falling edge of SCLx, SSPxIF and BF are set.
10. Master clears SSPxIF and reads the received byte from SSPxUF, clears BF.
11. Master sets $\overline{ACK}$ value sent to slave in ACKDT bit of the SSPxCON2 register and initiates the $\overline{ACK}$ by setting the ACKEN bit.
12. Masters $\overline{ACK}$ is clocked out to the slave and SSPxIF is set.
13. User clears SSPxIF.
14. Steps 8-13 are repeated for each received byte from the slave.
15. Master sends a not $\overline{ACK}$ or Stop to end communication.

FIGURE 15-29: I²C MASTER MODE WAVEFORM (RECEPTION, 7-BIT ADDRESS)

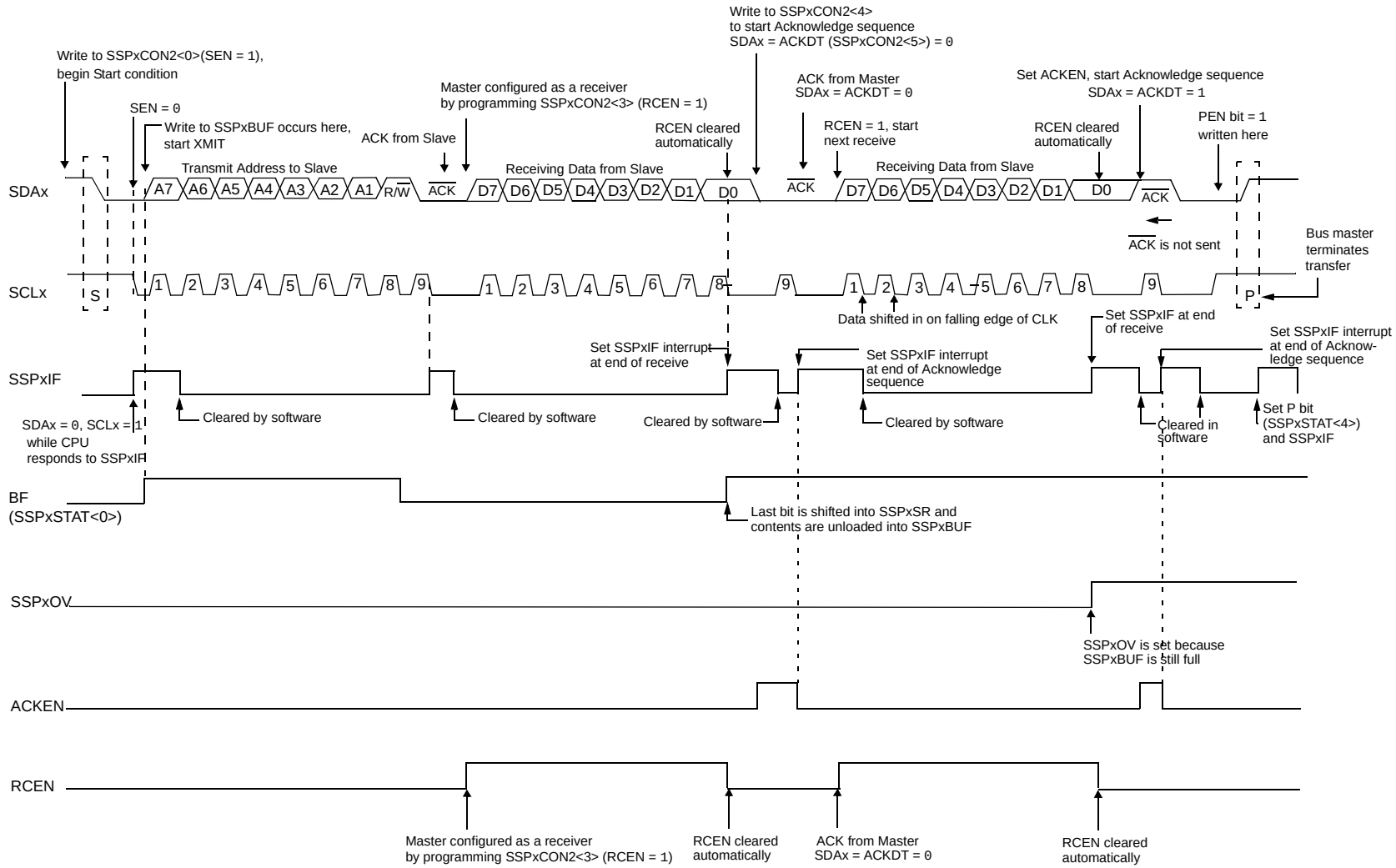

© 2010-2016 Microchip Technology Inc.

15.6.8 ACKNOWLEDGE SEQUENCE TIMING

An Acknowledge sequence is enabled by setting the Acknowledge Sequence Enable bit, ACKEN, of the SSPxCON2 register. When this bit is set, the SCLx pin is pulled low and the contents of the Acknowledge data bit are presented on the SDAx pin. If the user wishes to generate an Acknowledge, then the ACKDT bit should be cleared. If not, the user should set the ACKDT bit before starting an Acknowledge sequence. The Baud Rate Generator then counts for one rollover period (TBRG) and the SCLx pin is deasserted (pulled high). When the SCLx pin is sampled high (clock arbitration), the Baud Rate Generator counts for TBRG. The SCLx pin is then pulled low. Following this, the ACKEN bit is automatically cleared, the Baud Rate Generator is turned off and the MSSPx module then goes into Idle mode (Figure 15-30).

15.6.8.1 WCOL Status Flag

If the user writes the SSPxBUF when an Acknowledge sequence is in progress, then WCOL is set and the contents of the buffer are unchanged (the write does not occur).

15.6.9 STOP CONDITION TIMING

A Stop bit is asserted on the SDAx pin at the end of a receive/transmit by setting the Stop Sequence Enable bit, PEN, of the SSPxCON2 register. At the end of a receive/transmit, the SCLx line is held low after the falling edge of the ninth clock. When the PEN bit is set, the master will assert the SDAx line low. When the SDAx line is sampled low, the Baud Rate Generator is reloaded and counts down to ‘0’. When the Baud Rate Generator times out, the SCLx pin will be brought high and one TBRG (Baud Rate Generator rollover count) later, the SDAx pin will be deasserted. When the SDAx pin is sampled high while SCLx is high, the P bit of the SSPxSTAT register is set. A TBRG later, the PEN bit is cleared and the SSPxIF bit is set (Figure 15-31).

15.6.9.1 WCOL Status Flag

If the user writes the SSPxBUF when a Stop sequence is in progress, then the WCOL bit is set and the contents of the buffer are unchanged (the write does not occur).

FIGURE 15-30: ACKNOWLEDGE SEQUENCE WAVEFORM

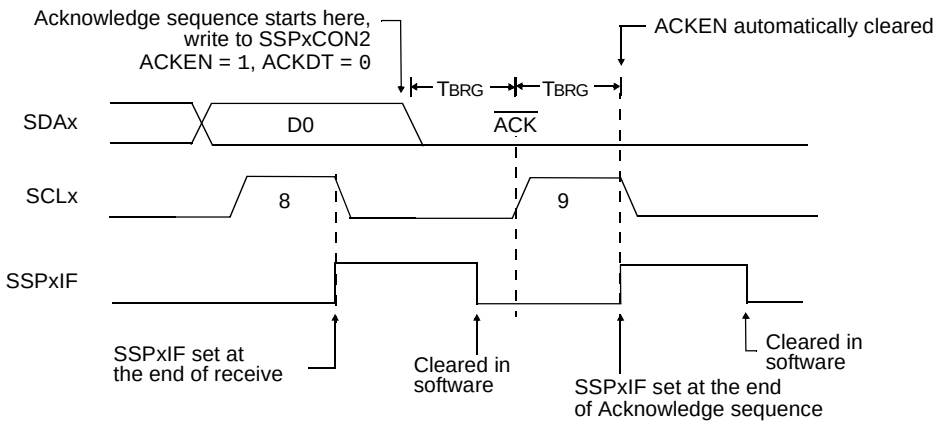

Note: TBRG = one Baud Rate Generator period.

FIGURE 15-31: STOP CONDITION RECEIVE OR TRANSMIT MODE

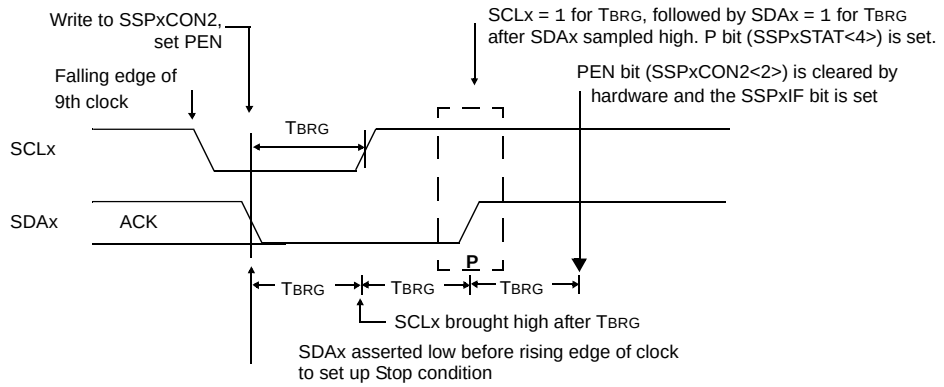

Note: TBRG = one Baud Rate Generator period.

15.6.10 SLEEP OPERATION

While in Sleep mode, the I^{2}C slave module can receive addresses or data and when an address match or complete byte transfer occurs, wake the processor from Sleep (if the MSSPx interrupt is enabled).

15.6.11 EFFECTS OF A RESET

A Reset disables the MSSPx module and terminates the current transfer.

15.6.12 MULTI-MASTER MODE

In Multi-Master mode, the interrupt generation on the detection of the Start and Stop conditions allows the determination of when the bus is free. The Stop (P) and Start (S) bits are cleared from a Reset or when the MSSPx module is disabled. Control of the I^{2}C bus may be taken when the P bit of the SSPxSTAT register is set, or the bus is Idle, with both the S and P bits clear. When the bus is busy, enabling the SSPx interrupt will generate the interrupt when the Stop condition occurs.

In multi-master operation, the SDAx line must be monitored for arbitration to see if the signal level is the expected output level. This check is performed by hardware with the result placed in the BCLxIF bit.

The states where arbitration can be lost are:

- Address Transfer
- Data Transfer
- A Start Condition
- A Repeated Start Condition
- An Acknowledge Condition

© 2010-2016 Microchip Technology Inc.

15.6.13 MULTI -MASTER COMMUNICATION, BUS COLLISION AND BUS ARBITRATION

Multi-Master mode support is achieved by bus arbitration. When the master outputs address/data bits onto the SDAx pin, arbitration takes place when the master outputs a '1' on SDAx, by letting SDAx float high and another master asserts a '0'. When the SCLx pin floats high, data should be stable. If the expected data on SDAx is a '1' and the data sampled on the SDAx pin is '0', then a bus collision has taken place. The master will set the Bus Collision Interrupt Flag, BCLxIF, and reset the I^2C port to its Idle state (Figure 15-32).

If a transmit was in progress when the bus collision occurred, the transmission is halted, the BF flag is cleared, the SDAx and SCLx lines are deasserted and the SSPxBUF can be written to. When the user services the bus collision Interrupt Service Routine and if the I^2C bus is free, the user can resume communication by asserting a Start condition.

If a Start, Repeated Start, Stop or Acknowledge condition was in progress when the bus collision occurred, the condition is aborted, the SDAx and SCLx lines are deasserted and the respective control bits in the SSPxCON2 register are cleared. When the user services the bus collision Interrupt Service Routine and if the I^2C bus is free, the user can resume communication by asserting a Start condition.

The master will continue to monitor the SDAx and SCLx pins. If a Stop condition occurs, the SSPxIF bit will be set.

A write to the SSPxBUF will start the transmission of data at the first data bit, regardless of where the transmitter left off when the bus collision occurred.

In Multi-Master mode, the interrupt generation on the detection of Start and Stop conditions allows the determination of when the bus is free. Control of the I^2C bus can be taken when the P bit is set in the SSPxSTAT register, or the bus is Idle and the S and P bits are cleared.

FIGURE 15-32: BUS COLLISION TIMING FOR TRANSMIT AND ACKNOWLEDGE

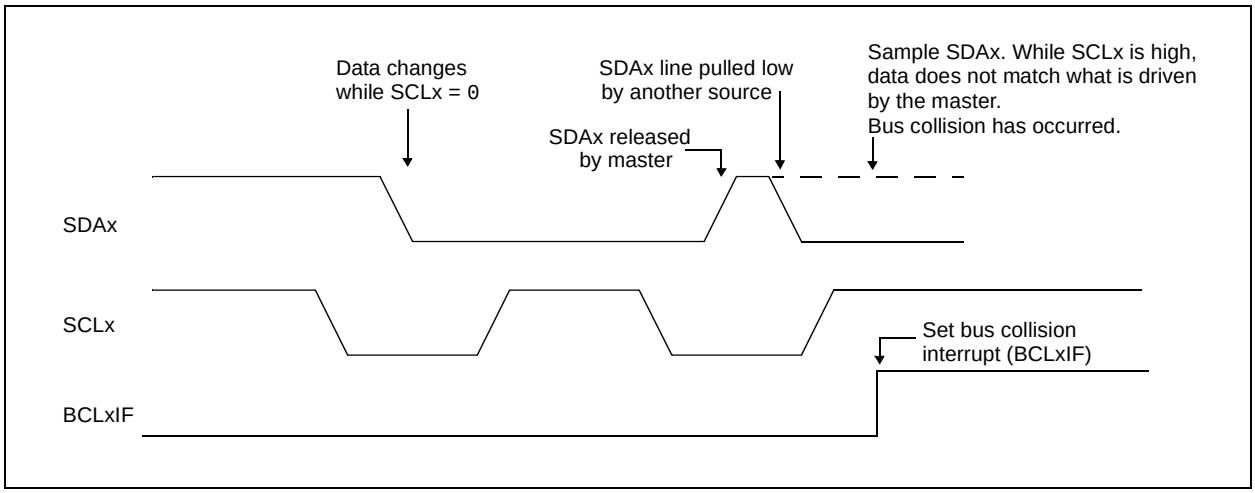

15.6.13.1 Bus Collision During a Start Condition

During a Start condition, a bus collision occurs if:

a) SDAx or SCLx are sampled low at the beginning of the Start condition (Figure 15-33).

b) SCLx is sampled low before SDAx is asserted low (Figure 15-34).

During a Start condition, both the SDAx and the SCLx pins are monitored.

If the SDAx pin is already low, or the SCLx pin is already low, then all of the following occur:

- the Start condition is aborted,
- the BCLxIF flag is set and
- the MSSPx module is reset to its Idle state (Figure 15-33).

The Start condition begins with the SDAx and SCLx pins deasserted. When the SDAx pin is sampled high, the Baud Rate Generator is loaded and counts down. If the SCLx pin is sampled low while SDAx is high, a bus collision occurs because it is assumed that another master is attempting to drive a data '1' during the Start condition.

If the SDAx pin is sampled low during this count, the BRG is reset and the SDAx line is asserted early (Figure 15-35). If, however, a '1' is sampled on the SDAx pin, the SDAx pin is asserted low at the end of the BRG count. The Baud Rate Generator is then reloaded and counts down to zero; if the SCLx pin is sampled as '0' during this time, a bus collision does not occur. At the end of the BRG count, the SCLx pin is asserted low.

> **Note:** The reason that bus collision is not a factor during a Start condition is that no two bus masters can assert a Start condition at the exact same time. Therefore, one master will always assert SDAx before the other. This condition does not cause a bus collision because the two masters must be allowed to arbitrate the first address following the Start condition. If the address is the same, arbitration must be allowed to continue into the data portion, Repeated Start or Stop conditions.

FIGURE 15-33: BUS COLLISION DURING START CONDITION (SDAx ONLY)

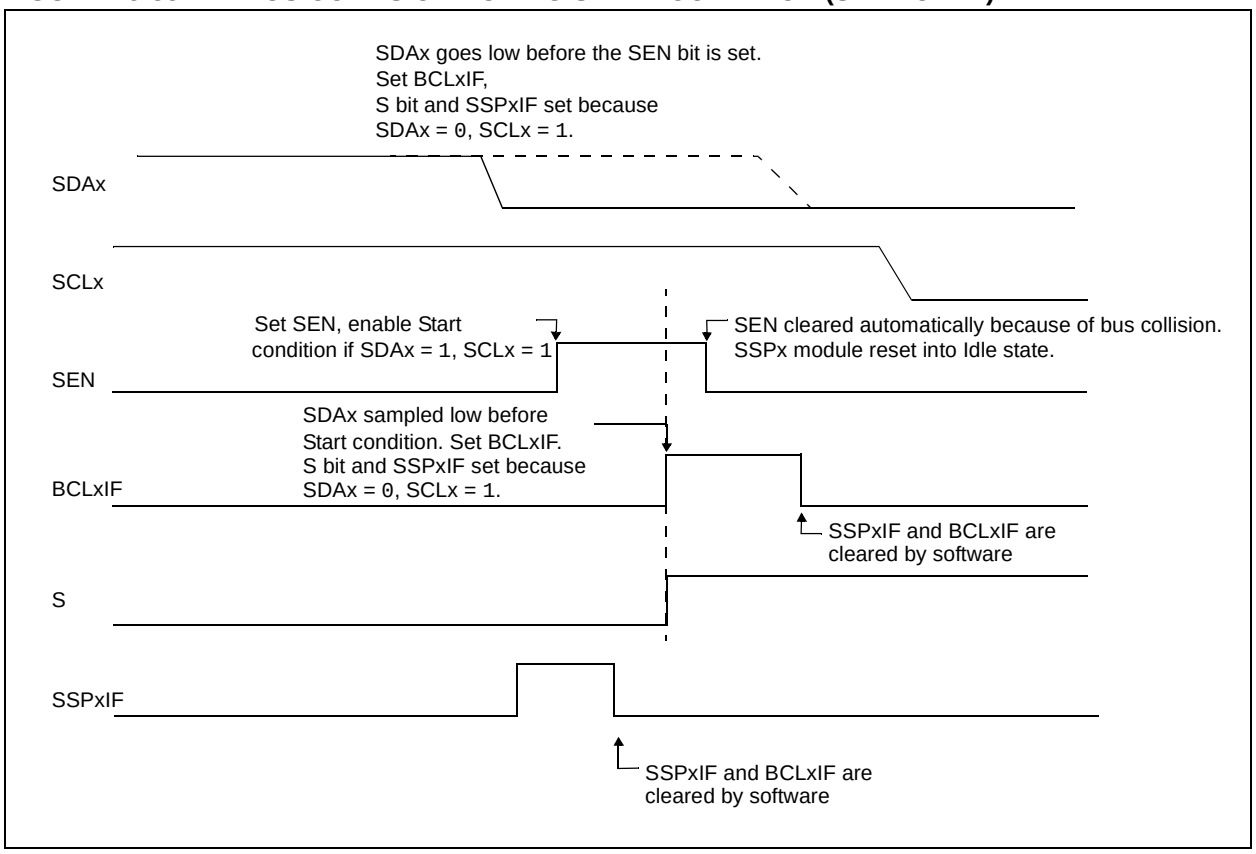

© 2010-2016 Microchip Technology Inc.

FIGURE 15-34: BUS COLLISION DURING START CONDITION (SCLx = 0)

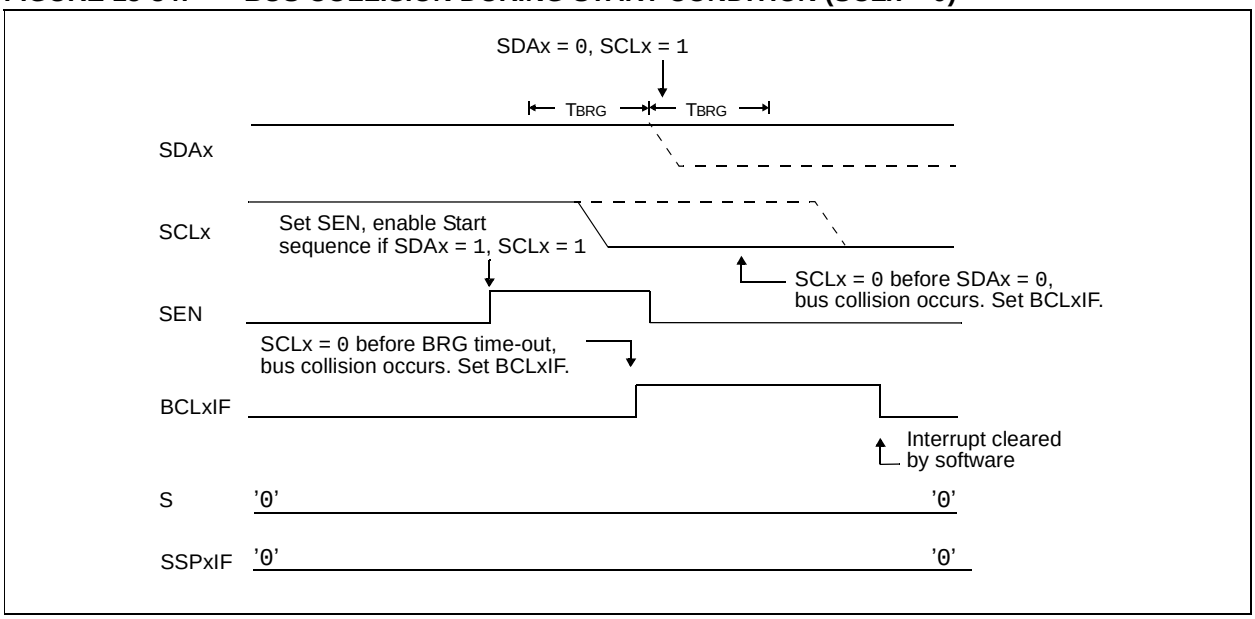

FIGURE 15-35: BRG RESET DUE TO SDA ARBITRATION DURING START CONDITION

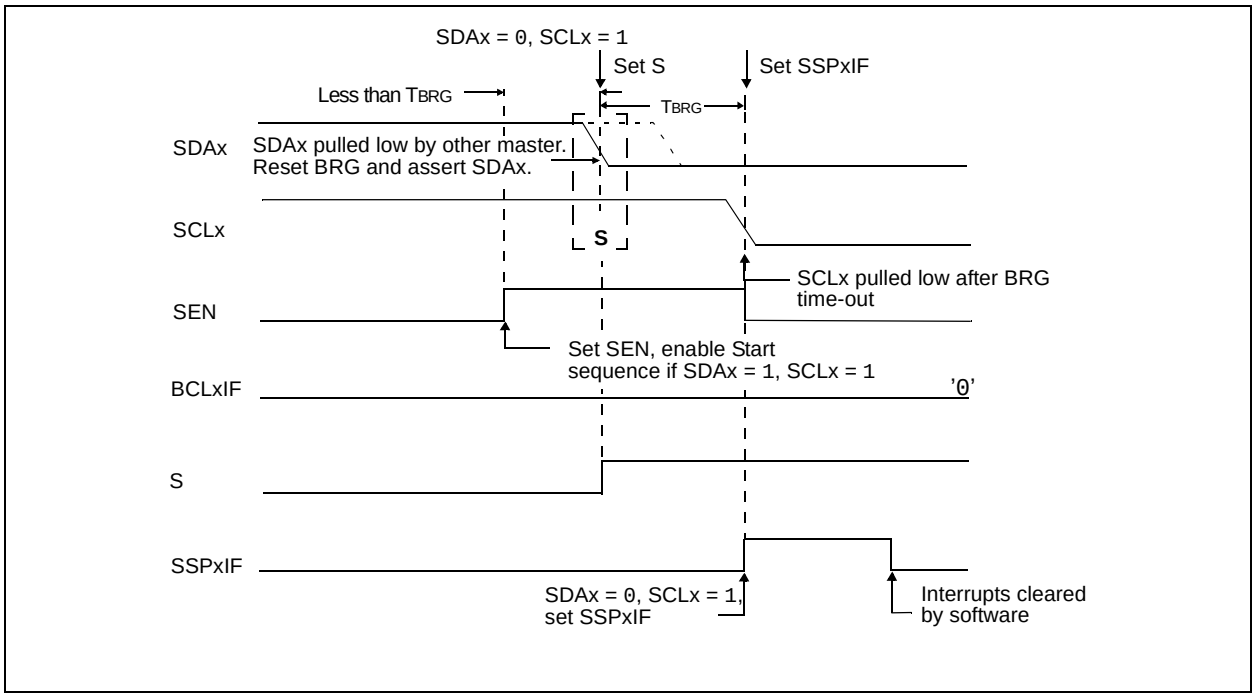

15.6.13.2 Bus Collision During a Repeated Start Condition

During a Repeated Start condition, a bus collision occurs if:

a) A low level is sampled on SDAx when SCLx goes from low level to high level (Case 1).

b) SCLx goes low before SDAx is asserted low, indicating that another master is attempting to transmit a data ‘1’ (Case 2).

When the user releases SDAx and the pin is allowed to float high, the BRG is loaded with SSPxADD and counts down to zero. The SCLx pin is then deasserted and when sampled high, the SDAx pin is sampled.

If SDAx is low, a bus collision has occurred (i.e., another master is attempting to transmit a data ‘0’, Figure 15-36). If SDAx is sampled high, the BRG is reloaded and begins counting. If SDAx goes from high-to-low before the BRG times out, no bus collision occurs because no two masters can assert SDAx at exactly the same time.

If SCLx goes from high-to-low before the BRG times out and SDAx has not already been asserted, a bus collision occurs. In this case, another master is attempting to transmit a data ‘1’ during the Repeated Start condition, see Figure 15-37.

If, at the end of the BRG time-out, both SCLx and SDAx are still high, the SDAx pin is driven low and the BRG is reloaded and begins counting. At the end of the count, regardless of the status of the SCLx pin, the SCLx pin is driven low and the Repeated Start condition is complete.

FIGURE 15-36: BUS COLLISION DURING A REPEATED START CONDITION (CASE 1)

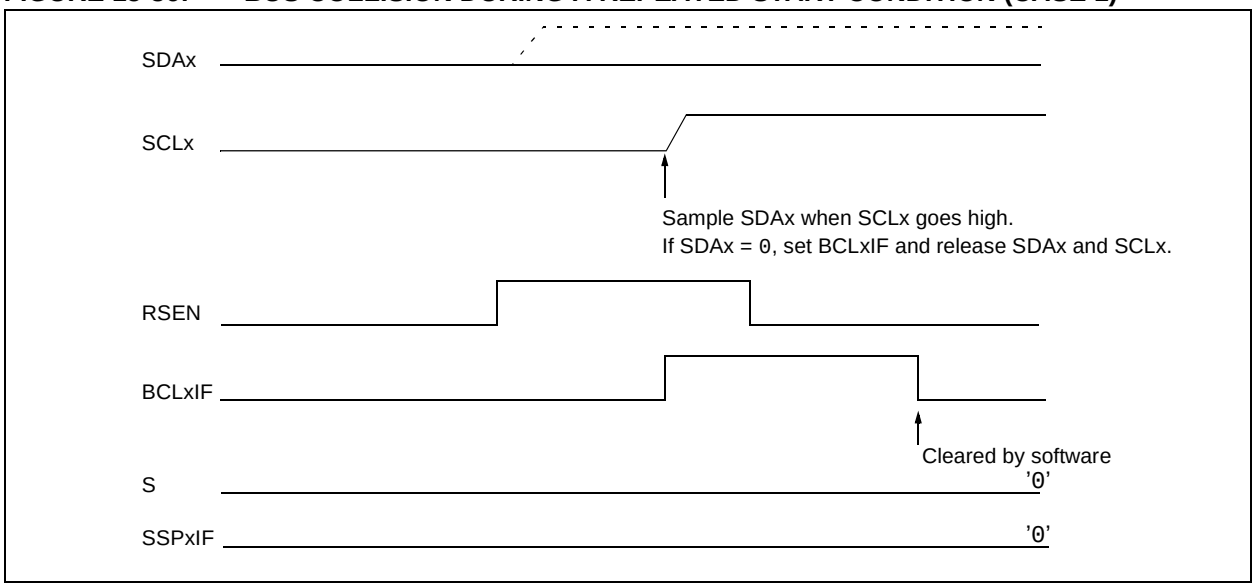

FIGURE 15-37: BUS COLLISION DURING REPEATED START CONDITION (CASE 2)

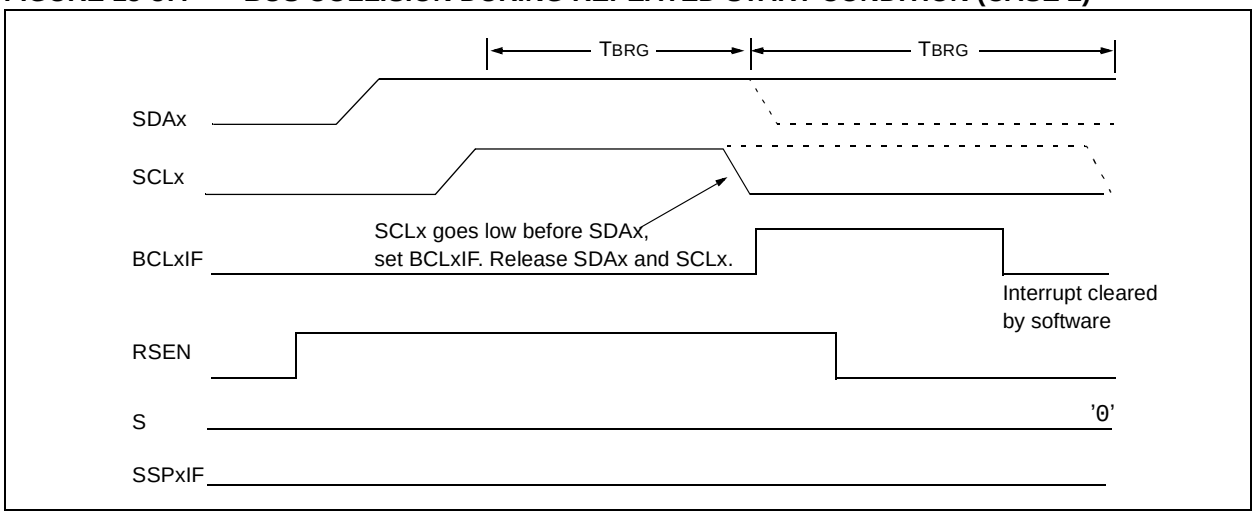

© 2010-2016 Microchip Technology Inc.

15.6.13.3 Bus Collision During a Stop Condition

Bus collision occurs during a Stop condition if:

a) After the SDAx pin has been deasserted and allowed to float high, SDAx is sampled low after the BRG has timed out (Case 1).

b) After the SCLx pin is deasserted, SCLx is sampled low before SDAx goes high (Case 2).

The Stop condition begins with SDAx asserted low. When SDAx is sampled low, the SCLx pin is allowed to float. When the pin is sampled high (clock arbitration), the Baud Rate Generator is loaded with SSPxADD and counts down to zero. After the BRG times out, SDAx is sampled. If SDAx is sampled low, a bus collision has occurred. This is due to another master attempting to drive a data '0' (Figure 15-38). If the SCLx pin is sampled low before SDAx is allowed to float high, a bus collision occurs. This is another case of another master attempting to drive a data '0' (Figure 15-39).

FIGURE 15-38: BUS COLLISION DURING A STOP CONDITION (CASE 1)

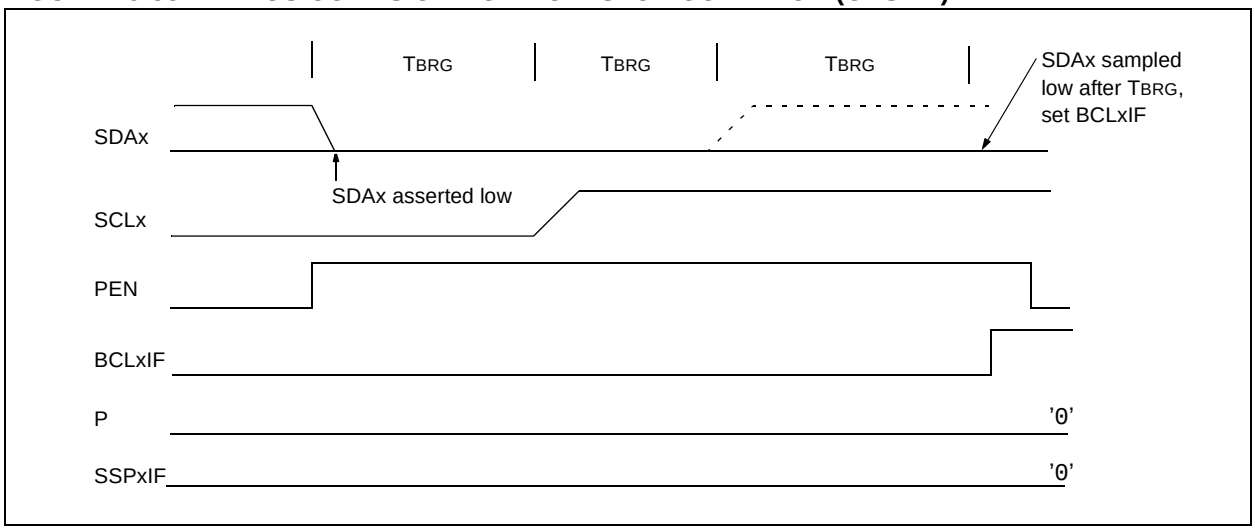

FIGURE 15-39: BUS COLLISION DURING A STOP CONDITION (CASE 2)

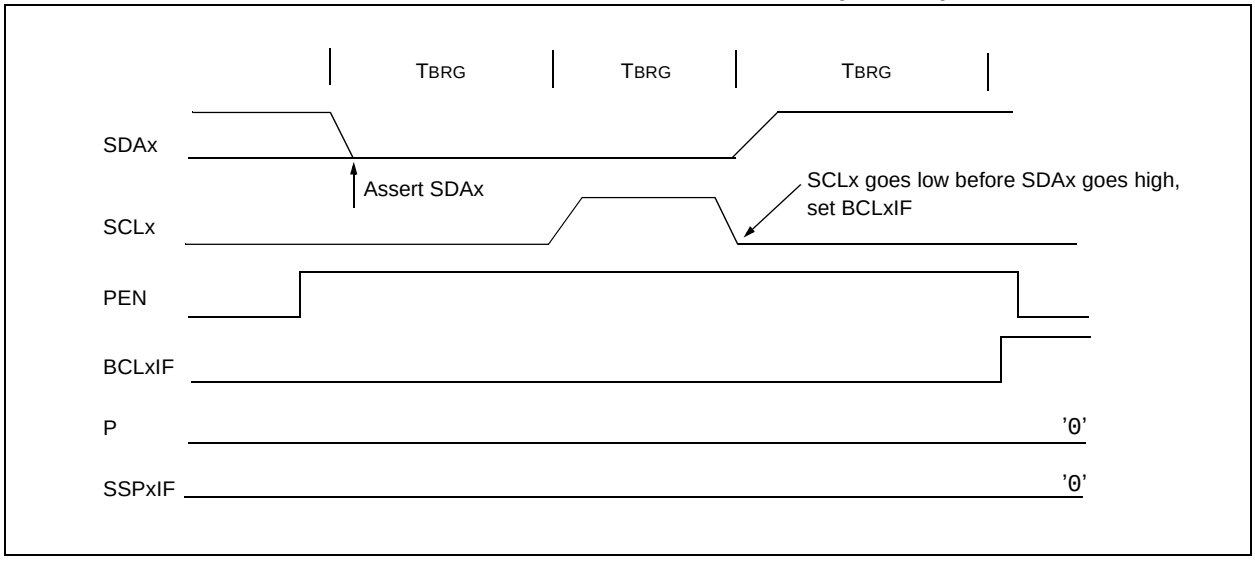

TABLE 15-2: REGISTERS ASSOCIATED WITH I²C OPERATION

Name	Bit 7	Bit 6	Bit 5	Bit 4	Bit 3	Bit 2	Bit 1	Bit 0	Register on Page
ANSELA	—	—	ANSA5	—	ANSA3	ANSA2	ANSA1	ANSA0	149
ANSELB	—	—	ANSB5	ANSB4	ANSB3	ANSB2	ANSB1(1)	ANSB0(1)	150
ANSELC	ANSC7	ANSC6	ANSC5	ANSC4	ANSC3	ANSC2	—	—	150
ANSELD	ANSD7	ANSD6	ANSD5	ANSD4	ANSD3	ANSD2	ANSD1(2)	ANSD0(2)	150
INTCON	GIE/GIEH	PEIE/GIEL	TMR0IE	INT0IE	RBIE	TMR0IF	INT0IF	RBIF	109
IPR1	—	ADIP	RC1IP	TX1IP	SSP1IP	CCP1IP	TMR2IP	TMR1IP	121
IPR2	OSCFIP	C1IP	C2IP	EEIP	BCL1IP	HLVDIP	TMR3IP	CCP2IP	122
IPR3	SSP2IP	BCL2IP	RC2IP	TX2IP	CTMUIP	TMR5GIP	TMR3GIP	TMR1GIP	123
PIE1	—	ADIE	RC1IE	TX1IE	SSP1IE	CCP1IE	TMR2IE	TMR1IE	117
PIE2	OSCFIE	C1IE	C2IE	EEIE	BCL1IE	HLVDIE	TMR3IE	CCP2IE	118
PIE3	SSP2IE	BCL2IE	RC2IE	TX2IE	CTMUIE	TMR5GIE	TMR3GIE	TMR1GIE	119
PIR1	—	ADIF	RC1IF	TX1IF	SSP1IF	CCP1IF	TMR2IF	TMR1IF	112
PIR2	OSCFIF	C1IF	C2IF	EEIF	BCL1IF	HLVDIF	TMR3IF	CCP2IF	113
PIR3	SSP2IF	BCL2IF	RC2IF	TX2IF	CTMUIF	TMR5GIF	TMR3GIF	TMR1GIF	114
PMD1	MSSP2MD	MSSP1MD	—	CCP5MD	CCP4MD	CCP3MD	CCP2MD	CCP1MD	53
SSP1ADD	SSP1 Address Register in I²C Slave mode. SSP1 Baud Rate Reload Register in I²C Master mode.								258
SSP1BUF	SSP1 Receive Buffer/Transmit Register								—
SSP1CON1	WCOL	SSPOV	SSPEN	CKP	SSPM<3:0>				253
SSP1CON2	GCEN	ACKSTAT	ACKDT	ACKEN	RCEN	PEN	RSEN	SEN	255
SSP1CON3	ACKTIM	PCIE	SCIE	BOEN	SDAHT	SBCDE	AHEN	DHEN	256
SSP1MSK	SSP1 MASK Register bits								257
SSP1STAT	SMP	CKE	D/$\overline{A}$	P	S	R/$\overline{W}$	UA	BF	252
SSP2ADD	SSP2 Address Register in I²C Slave mode. SSP2 Baud Rate Reload Register in I²C Master mode.								258
SSP2BUF	SSP2 Receive Buffer/Transmit Register								—
SSP2CON1	WCOL	SSPOV	SSPEN	CKP	SSPM<3:0>				253
SSP2CON2	GCEN	ACKSTAT	ACKDT	ACKEN	RCEN	PEN	RSEN	SEN	255
SSP2CON3	ACKTIM	PCIE	SCIE	BOEN	SDAHT	SBCDE	AHEN	DHEN	256
SSP2MSK	SSP1 MASK Register bits								257
SSP2STAT	SMP	CKE	D/$\overline{A}$	P	S	R/$\overline{W}$	UA	BF	252
TRISB	TRISB7	TRISB6	TRISB5	TRISB4	TRISB3	TRISB2	TRISB1(1)	TRISB0(1)	151
TRISC	TRISC7	TRISC6	TRISC5	TRISC4	TRISC3	TRISC2	TRISC1	TRISC0	151
TRISD	TRISD7	TRISD6	TRISD5	TRISD4	TRISD3	TRISD2	TRISD1(2)	TRISD0(2)	151

Legend: Shaded bits are not used by the MSSPx in I²C mode.

Note 1: PIC18(L)F2XK22 devices.

2: PIC18(L)F4XK22 devices.

© 2010-2016 Microchip Technology Inc.

15.7 Baud Rate Generator

The MSSPx module has a Baud Rate Generator available for clock generation in both I^{2}C and SPI Master modes. The Baud Rate Generator (BRG) reload value is placed in the SSPxADD register (Register 15-7). When a write occurs to SSPxBUF, the Baud Rate Generator will automatically begin counting down.

Once the given operation is complete, the internal clock will automatically stop counting and the clock pin will remain in its last state.

An internal signal “Reload” in Figure 15-40 triggers the value from SSPxADD to be loaded into the BRG counter.

This occurs twice for each oscillation of the module clock line. The logic dictating when the reload signal is asserted depends on the mode the MSSPx is being operated in.

Table 15-3 demonstrates clock rates based on instruction cycles and the BRG value loaded into SSPxADD.

EQUATION 15-1: FCLOCK FORMULA

$$F_{CLOCK} = \frac{F_{OSC}}{(SSPxADD + 1)(4)}$$

FIGURE 15-40: BAUD RATE GENERATOR BLOCK DIAGRAM

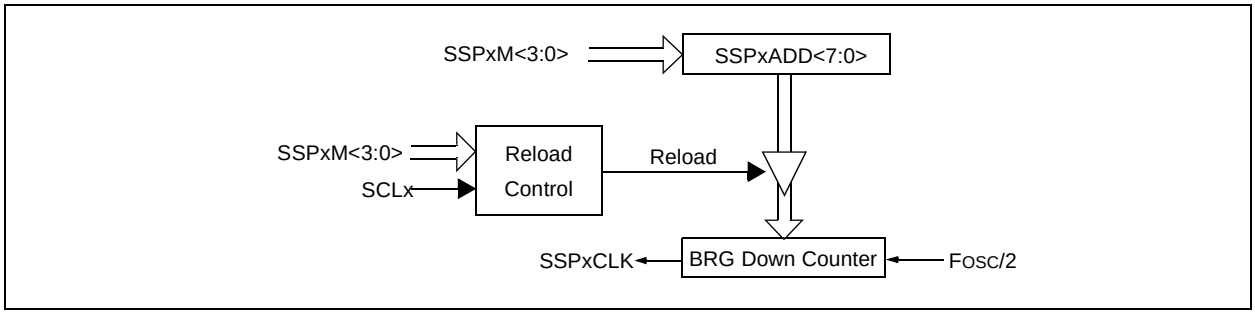

Note: Values of 0x00, 0x01 and 0x02 are not valid for SSPxADD when used as a Baud Rate Generator for I^{2}C. This is an implementation limitation.

TABLE 15-3: MSSPx CLOCK RATE W/BRG

FOSC	FCY	BRG Value	FCLOCK (2 Rollovers of BRG)
32 MHz	8 MHz	13h	400 kHz(1)
32 MHz	8 MHz	19h	308 kHz
32 MHz	8 MHz	4Fh	100 kHz
16 MHz	4 MHz	09h	400 kHz(1)
16 MHz	4 MHz	0Ch	308 kHz
16 MHz	4 MHz	27h	100 kHz
4 MHz	1 MHz	09h	100 kHz

Note 1: The I^{2}C interface does not conform to the 400 kHz I^{2}C specification (which applies to rates greater than 100 kHz) in all details, but may be used with care where higher rates are required by the application.

15.8 Register Definitions: MSSP Control

REGISTER 15-2: SSPxSTAT: SSPx STATUS REGISTER

R/W-0	R/W-0	R-0	R-0	R-0	R-0	R-0	R-0
SMP	CKE	D/$\overline{A}$	P	S	R/$\overline{W}$	UA	BF
bit 7							bit 0

Legend:		
R = Readable bit	W = Writable bit	U = Unimplemented bit, read as ‘0’
u = Bit is unchanged	x = Bit is unknown	-n/n = Value at POR and BOR/Value at all other Resets
‘1’ = Bit is set	‘0’ = Bit is cleared	

bit 7 **SMP:** SPI Data Input Sample bit

SPI Master mode:
1 = Input data sampled at end of data output time
0 = Input data sampled at middle of data output time

SPI Slave mode:
SMP must be cleared when SPI is used in Slave mode

In I^2C Master or Slave mode:
1 = Slew rate control disabled for standard speed mode (100 kHz and 1 MHz)
0 = Slew rate control enabled for high speed mode (400 kHz)

bit 6 **CKE:** SPI Clock Edge Select bit (SPI mode only)

In SPI Master or Slave mode:
1 = Transmit occurs on transition from active to Idle clock state
0 = Transmit occurs on transition from Idle to active clock state

In I^2C mode only:
1 = Enable input logic so that thresholds are compliant with SMbus specification
0 = Disable SMbus specific inputs

bit 5 **D/$\overline{A}$:** Data/$\overline{\text{Address}}$ bit (I^2C mode only)
1 = Indicates that the last byte received or transmitted was data
0 = Indicates that the last byte received or transmitted was address

bit 4 **P:** Stop bit
(I^2C mode only. This bit is cleared when the MSSPx module is disabled, SSPxEN is cleared.)
1 = Indicates that a Stop bit has been detected last (this bit is ‘0’ on Reset)
0 = Stop bit was not detected last

bit 3 **S:** Start bit
(I^2C mode only. This bit is cleared when the MSSPx module is disabled, SSPxEN is cleared.)
1 = Indicates that a Start bit has been detected last (this bit is ‘0’ on Reset)
0 = Start bit was not detected last

bit 2 **R/$\overline{W}$:** Read/$\overline{\text{Write}}$ bit information (I^2C mode only)
This bit holds the R/$\overline{W}$ bit information following the last address match. This bit is only valid from the address match to the next Start bit, Stop bit, or not $\overline{\text{ACK}}$ bit.

In I^2C Slave mode:
1 = Read
0 = Write

In I^2C Master mode:
1 = Transmit is in progress
0 = Transmit is not in progress
OR-ing this bit with SEN, RSEN, PEN, RCEN or ACKEN will indicate if the MSSPx is in Idle mode.

bit 1 **UA:** Update Address bit (10-bit I^2C mode only)
1 = Indicates that the user needs to update the address in the SSPxADD register
0 = Address does not need to be updated

bit 0 **BF:** Buffer Full Status bit

Receive (SPI and I^2C modes):
1 = Receive complete, SSPxBUF is full
0 = Receive not complete, SSPxBUF is empty

Transmit (I^2C mode only):
1 = Data transmit in progress (does not include the $\overline{\text{ACK}}$ and Stop bits), SSPxBUF is full
0 = Data transmit complete (does not include the $\overline{\text{ACK}}$ and Stop bits), SSPxBUF is empty

© 2010-2016 Microchip Technology Inc.

REGISTER 15-3: SSPxCON1: SSPx CONTROL REGISTER 1

R/C/HS-0	R/C/HS-0	R/W-0	R/W-0	R/W-0	R/W-0	R/W-0	R/W-0
WCOL	SSPxOV	SSPxEN	CKP	SSPxM<3:0>			
bit 7							bit 0

Legend:			
R = Readable bit	W = Writable bit	U = Unimplemented bit, read as ‘0’	
u = Bit is unchanged	x = Bit is unknown	-n/n = Value at POR and BOR/Value at all other Resets	
‘1’ = Bit is set	‘0’ = Bit is cleared	HS = Bit is set by hardware	C = User cleared

bit 7 **WCOL:** Write Collision Detect bit
Master mode:
1 = A write to the SSPxBUF register was attempted while the I^2C conditions were not valid for a transmission to be started
0 = No collision
Slave mode:
1 = The SSPxBUF register is written while it is still transmitting the previous word (must be cleared in software)
0 = No collision

bit 6 **SSPxOV:** Receive Overflow Indicator bit(1)
In SPI mode:
1 = A new byte is received while the SSPxBUF register is still holding the previous data. In case of overflow, the data in SSPxSR is lost. Overflow can only occur in Slave mode. In Slave mode, the user must read the SSPxBUF, even if only transmitting data, to avoid setting overflow. In Master mode, the overflow bit is not set since each new reception (and transmission) is initiated by writing to the SSPxBUF register (must be cleared in software).
0 = No overflow
In I^2C mode:
1 = A byte is received while the SSPxBUF register is still holding the previous byte. SSPxOV is a “don’t care” in Transmit mode (must be cleared in software).
0 = No overflow

bit 5 **SSPxEN:** Synchronous Serial Port Enable bit
In both modes, when enabled, these pins must be properly configured as input or output
In SPI mode:
1 = Enables serial port and configures SCKx, SDOx, SDIx and $\overline{SSx}$ as the source of the serial port pins(2)
0 = Disables serial port and configures these pins as I/O port pins
In I^2C mode:
1 = Enables the serial port and configures the SDAx and SCLx pins as the source of the serial port pins(3)
0 = Disables serial port and configures these pins as I/O port pins

bit 4 **CKP:** Clock Polarity Select bit
In SPI mode:
1 = Idle state for clock is a high level
0 = Idle state for clock is a low level
In I^2C Slave mode:
SCLx release control
1 = Enable clock
0 = Holds clock low (clock stretch). (Used to ensure data setup time.)
In I^2C Master mode:
Unused in this mode

REGISTER 15-3: SSPxCON1: SSPx CONTROL REGISTER 1 (CONTINUED)

bit 3-0 **SSPxM<3:0>:** Synchronous Serial Port Mode Select bits

0000 = SPI Master mode, clock = FOSC/4
0001 = SPI Master mode, clock = FOSC/16
0010 = SPI Master mode, clock = FOSC/64
0011 = SPI Master mode, clock = TMR2 output/2
0100 = SPI Slave mode, clock = SCKx pin, $\overline{SSx}$ pin control enabled
0101 = SPI Slave mode, clock = SCKx pin, $\overline{SSx}$ pin control disabled, $\overline{SSx}$ can be used as I/O pin
0110 = I^2C Slave mode, 7-bit address
0111 = I^2C Slave mode, 10-bit address
1000 = I^2C Master mode, clock = FOSC / (4 * (SSPxADD+1))**(4)**
1001 = Reserved
1010 = SPI Master mode, clock = FOSC/(4 * (SSPxADD+1))
1011 = I^2C firmware controlled Master mode (slave idle)
1100 = Reserved
1101 = Reserved
1110 = I^2C Slave mode, 7-bit address with Start and Stop bit interrupts enabled
1111 = I^2C Slave mode, 10-bit address with Start and Stop bit interrupts enabled

Note 1: In Master mode, the overflow bit is not set since each new reception (and transmission) is initiated by writing to the SSPxBUF register.

2: When enabled, these pins must be properly configured as input or output.

3: When enabled, the SDAx and SCLx pins must be configured as inputs.

4: SSPxADD values of 0, 1 or 2 are not supported for I^2C mode.

© 2010-2016 Microchip Technology Inc.

REGISTER 15-4: SSPxCON2: SSPx CONTROL REGISTER 2

R/W-0	R-0	R/W-0	R/S/HC-0	R/S/HC-0	R/S/HC-0	R/S/HC-0	R/W/HC-0
GCEN	ACKSTAT	ACKDT	ACKEN(1)	RCEN(1)	PEN(1)	RSEN(1)	SEN(1)
bit 7							bit 0

Legend:		
R = Readable bit	W = Writable bit	U = Unimplemented bit, read as ‘0’
u = Bit is unchanged	x = Bit is unknown	-n/n = Value at POR and BOR/Value at all other Resets
‘1’ = Bit is set	‘0’ = Bit is cleared	HC = Cleared by hardware S = User set

bit 7 **GCEN:** General Call Enable bit (in I^2C Slave mode only)
1 = Enable interrupt when a general call address (0x00 or 00h) is received in the SSPxSR
0 = General call address disabled

bit 6 **ACKSTAT:** Acknowledge Status bit (in I^2C mode only)
1 = Acknowledge was not received
0 = Acknowledge was received

bit 5 **ACKDT:** Acknowledge Data bit (in I^2C mode only)
In Receive mode:
Value transmitted when the user initiates an Acknowledge sequence at the end of a receive
1 = Not Acknowledge
0 = Acknowledge

bit 4 **ACKEN(1):** Acknowledge Sequence Enable bit (in I^2C Master mode only)
In Master Receive mode:
1 = Initiate Acknowledge sequence on SDAx and SCLx pins, and transmit ACKDT data bit. Automatically cleared by hardware.
0 = Acknowledge sequence idle

bit 3 **RCEN(1):** Receive Enable bit (in I^2C Master mode only)
1 = Enables Receive mode for I^2C
0 = Receive idle

bit 2 **PEN(1):** Stop Condition Enable bit (in I^2C Master mode only)
SCKx Release Control:
1 = Initiate Stop condition on SDAx and SCLx pins. Automatically cleared by hardware.
0 = Stop condition Idle

bit 1 **RSEN(1):** Repeated Start Condition Enabled bit (in I^2C Master mode only)
1 = Initiate Repeated Start condition on SDAx and SCLx pins. Automatically cleared by hardware.
0 = Repeated Start condition Idle

bit 0 **SEN(1):** Start Condition Enabled bit (in I^2C Master mode only)
In Master mode:
1 = Initiate Start condition on SDAx and SCLx pins. Automatically cleared by hardware.
0 = Start condition Idle
In Slave mode:
1 = Clock stretching is enabled for both slave transmit and slave receive (stretch enabled)
0 = Clock stretching is disabled

Note 1: For bits ACKEN, RCEN, PEN, RSEN, SEN: If the I^2C module is not in the Idle mode, this bit may not be set (no spooling) and the SSPxBUF may not be written (or writes to the SSPxBUF are disabled).

REGISTER 15-5: SSPxCON3: SSPx CONTROL REGISTER 3

R-0	R/W-0	R/W-0	R/W-0	R/W-0	R/W-0	R/W-0	R/W-0
ACKTIM	PCIE	SCIE	BOEN	SDAHT	SBCDE	AHEN	DHEN
bit 7							bit 0

Legend:		
R = Readable bit	W = Writable bit	U = Unimplemented bit, read as ‘0’
u = Bit is unchanged	x = Bit is unknown	-n/n = Value at POR and BOR/Value at all other Resets
‘1’ = Bit is set	‘0’ = Bit is cleared	

bit 7 **ACKTIM:** Acknowledge Time Status bit (I^2C mode only)(3)
`1` = Indicates the I^2C bus is in an Acknowledge sequence, set on 8th falling edge of SCLx clock
`0` = Not an Acknowledge sequence, cleared on 9th rising edge of SCLx clock

bit 6 **PCIE**: Stop Condition Interrupt Enable bit (I^2C mode only)
`1` = Enable interrupt on detection of Stop condition
`0` = Stop detection interrupts are disabled(2)

bit 5 **SCIE**: Start Condition Interrupt Enable bit (I^2C mode only)
`1` = Enable interrupt on detection of Start or Restart conditions
`0` = Start detection interrupts are disabled(2)

bit 4 **BOEN:** Buffer Overwrite Enable bit
In SPI Slave mode:(1)
`1` = SSPxBUF updates every time that a new data byte is shifted in ignoring the BF bit
`0` = If new byte is received with BF bit of the SSPxSTAT register already set, SSPxOV bit of the SSPxCON1 register is set, and the buffer is not updated
In I^2C Master mode:
This bit is ignored.
In I^2C Slave mode:
`1` = SSPxBUF is updated and $\overline{\text{ACK}}$ is generated for a received address/data byte, ignoring the state of the SSPxOV bit only if the BF bit = `0`.
`0` = SSPxBUF is only updated when SSPxOV is clear

bit 3 **SDAHT:** SDAx Hold Time Selection bit (I^2C mode only)
`1` = Minimum of 300 ns hold time on SDAx after the falling edge of SCLx
`0` = Minimum of 100 ns hold time on SDAx after the falling edge of SCLx

bit 2 **SBCDE:** Slave Mode Bus Collision Detect Enable bit (I^2C Slave mode only)
If on the rising edge of SCLx, SDAx is sampled low when the module is outputting a high state, the BCLxIF bit of the PIR2 register is set, and bus goes idle
`1` = Enable slave bus collision interrupts
`0` = Slave bus collision interrupts are disabled

bit 1 **AHEN:** Address Hold Enable bit (I^2C Slave mode only)
`1` = Following the 8th falling edge of SCLx for a matching received address byte; CKP bit of the SSPx-CON1 register will be cleared and the SCLx will be held low.
`0` = Address holding is disabled

Note 1: For daisy-chained SPI operation; allows the user to ignore all but the last received byte. SSPxOV is still set when a new byte is received and BF = `1`, but hardware continues to write the most recent byte to SSPxBUF.
2: This bit has no effect in Slave modes for which Start and Stop condition detection is explicitly listed as enabled.
3: The ACKTIM Status bit is active only when the AHEN bit or DHEN bit is set.

© 2010-2016 Microchip Technology Inc.

REGISTER 15-5: SSPxCON3: SSPx CONTROL REGISTER 3 (CONTINUED)

bit 0 **DHEN:** Data Hold Enable bit (I^2C Slave mode only)

1 = Following the 8th falling edge of SCLx for a received data byte; slave hardware clears the CKP bit of the SSPxCON1 register and SCLx is held low.

0 = Data holding is disabled

Note 1: For daisy-chained SPI operation; allows the user to ignore all but the last received byte. SSPxOV is still set when a new byte is received and BF = 1, but hardware continues to write the most recent byte to SSPxBUF.

2: This bit has no effect in Slave modes for which Start and Stop condition detection is explicitly listed as enabled.

3: The ACKTIM Status bit is active only when the AHEN bit or DHEN bit is set.

REGISTER 15-6: SSPxMSK: SSPx MASK REGISTER

R/W-1	R/W-1	R/W-1	R/W-1	R/W-1	R/W-1	R/W-1	R/W-1
MSK7	MSK6	MSK5	MSK4	MSK3	MSK2	MSK1	MSK0
bit 7							bit 0

Legend:		
R = Readable bit	W = Writable bit	U = Unimplemented bit, read as ‘0’
u = Bit is unchanged	x = Bit is unknown	-n/n = Value at POR and BOR/Value at all other Resets
‘1’ = Bit is set	‘0’ = Bit is cleared	

bit 7-1 **MSK<7:1>:** Mask bits

1 = The received address bit n is compared to SSPxADD<n> to detect I^2C address match

0 = The received address bit n is not used to detect I^2C address match

bit 0 **MSK<0>:** Mask bit for I^2C Slave mode, 10-bit Address

I^2C Slave mode, 10-bit address (SSPxM<3:0> = 0111 or 1111):

1 = The received address bit 0 is compared to SSPxADD<0> to detect I^2C address match

0 = The received address bit 0 is not used to detect I^2C address match

I^2C Slave mode, 7-bit address, the bit is ignored

REGISTER 15-7: SSPxADD: MSSPx ADDRESS AND BAUD RATE REGISTER (I^2C MODE)

R/W-0	R/W-0	R/W-0	R/W-0	R/W-0	R/W-0	R/W-0	R/W-0
ADD<7:0>							
bit 7							bit 0

Legend:		
R = Readable bit	W = Writable bit	U = Unimplemented bit, read as ‘0’
u = Bit is unchanged	x = Bit is unknown	-n/n = Value at POR and BOR/Value at all other Resets
‘1’ = Bit is set	‘0’ = Bit is cleared	

Master mode:

bit 7-0 **ADD<7:0>:** Baud Rate Clock Divider bits
SCLx pin clock period = ((ADD<7:0> + 1) *4)/FOSC

10-Bit Slave mode — Most Significant Address byte:

bit 7-3 **Not used:** Unused for Most Significant Address byte. Bit state of this register is a “don’t care”. Bit pattern sent by master is fixed by I^2C specification and must be equal to ‘`11110`’. However, those bits are compared by hardware and are not affected by the value in this register.

bit 2-1 **ADD<2:1>:** Two Most Significant bits of 10-bit address

bit 0 **Not used:** Unused in this mode. Bit state is a “don’t care”.

10-Bit Slave mode — Least Significant Address byte:

bit 7-0 **ADD<7:0>:** Eight Least Significant bits of 10-bit address

7-Bit Slave mode:

bit 7-1 **ADD<7:1>:** 7-bit address

bit 0 **Not used:** Unused in this mode. Bit state is a “don’t care”.

© 2010-2016 Microchip Technology Inc.

16.0 ENHANCED UNIVERSAL SYNCHRONOUS ASYNCHRONOUS RECEIVER TRANSMITTER (EUSART)

The Enhanced Universal Synchronous Asynchronous Receiver Transmitter (EUSART) module is a serial I/O communications peripheral. It contains all the clock generators, shift registers and data buffers necessary to perform an input or output serial data transfer independent of device program execution. The EUSART, also known as a Serial Communications Interface (SCI), can be configured as a full-duplex asynchronous system or half-duplex synchronous system. Full-Duplex mode is useful for communications with peripheral systems, such as CRT terminals and personal computers. Half-Duplex Synchronous mode is intended for communications with peripheral devices, such as A/D or D/A integrated circuits, serial EEPROMs or other microcontrollers. These devices typically do not have internal clocks for baud rate generation and require the external clock signal provided by a master synchronous device.

The EUSART module includes the following capabilities:

- Full-duplex asynchronous transmit and receive
- Two-character input buffer
- One-character output buffer
- Programmable 8-bit or 9-bit character length
- Address detection in 9-bit mode
- Input buffer overrun error detection
- Received character framing error detection
- Half-duplex synchronous master
- Half-duplex synchronous slave
- Programmable clock and data polarity

The EUSART module implements the following additional features, making it ideally suited for use in Local Interconnect Network (LIN) bus systems:

- Automatic detection and calibration of the baud rate
- Wake-up on Break reception
- 13-bit Break character transmit

Block diagrams of the EUSART transmitter and receiver are shown in Figure 16-1 and Figure 16-2.

FIGURE 16-1: EUSART TRANSMIT BLOCK DIAGRAM

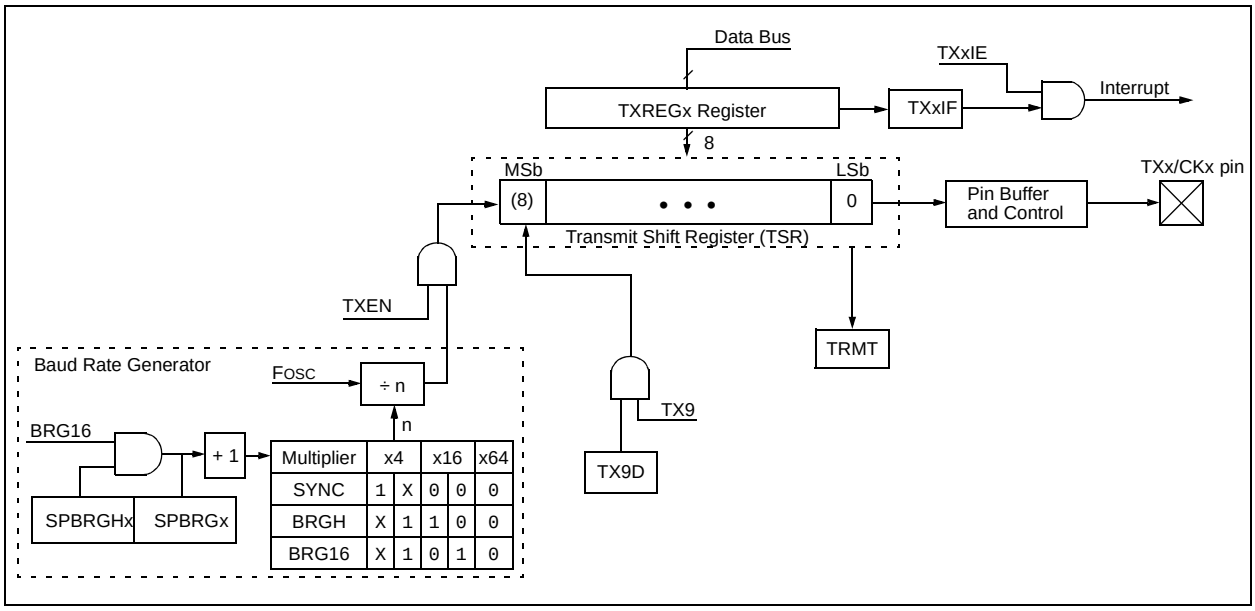

FIGURE 16-2: EUSART RECEIVE BLOCK DIAGRAM

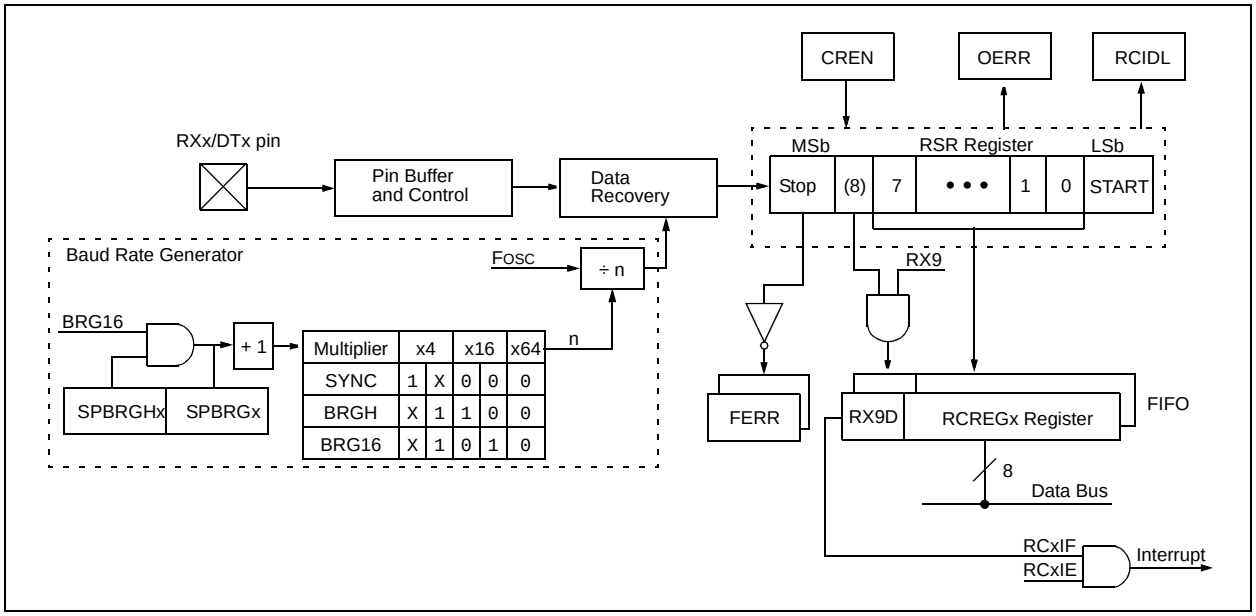

The operation of the EUSART module is controlled through three registers:

- Transmit Status and Control (TXSTAx)
- Receive Status and Control (RCSTAx)
- Baud Rate Control (BAUDCONx)

These registers are detailed in Register 16-1, Register 16-2 and Register 16-3, respectively.

For all modes of EUSART operation, the TRIS control bits corresponding to the RXx/DTx and TXx/CKx pins should be set to ‘1’. The EUSART control will automatically reconfigure the pin from input to output, as needed.

When the receiver or transmitter section is not enabled then the corresponding RXx/DTx or TXx/CKx pin may be used for general purpose input and output.

© 2010-2016 Microchip Technology Inc.

16.1 EUSART Asynchronous Mode

The EUSART transmits and receives data using the standard non-return-to-zero (NRZ) format. NRZ is implemented with two levels: a VOH Mark state which represents a '1' data bit, and a VOL Space state which represents a '0' data bit. NRZ refers to the fact that consecutively transmitted data bits of the same value stay at the output level of that bit without returning to a neutral level between each bit transmission. An NRZ transmission port idles in the Mark state. Each character transmission consists of one Start bit followed by eight or nine data bits and is always terminated by one or more Stop bits. The Start bit is always a space and the Stop bits are always marks. The most common data format is eight bits. Each transmitted bit persists for a period of 1/(Baud Rate). An on-chip dedicated 8-bit/16-bit Baud Rate Generator is used to derive standard baud rate frequencies from the system oscillator. See Table 16-5 for examples of baud rate configurations.

The EUSART transmits and receives the LSb first. The EUSART's transmitter and receiver are functionally independent, but share the same data format and baud rate. Parity is not supported by the hardware, but can be implemented in software and stored as the ninth data bit.

16.1.1 EUSART ASYNCHRONOUS TRANSMITTER

The EUSART transmitter block diagram is shown in Figure 16-1. The heart of the transmitter is the serial Transmit Shift Register (TSR), which is not directly accessible by software. The TSR obtains its data from the transmit buffer, which is the TXREGx register.

16.1.1.1 Enabling the Transmitter

The EUSART transmitter is enabled for asynchronous operations by configuring the following three control bits:

- TXEN = 1
- SYNC = 0
- SPEN = 1

All other EUSART control bits are assumed to be in their default state.

Setting the TXEN bit of the TXSTAx register enables the transmitter circuitry of the EUSART. Clearing the SYNC bit of the TXSTAx register configures the EUSART for asynchronous operation. Setting the SPEN bit of the RCSTAx register enables the EUSART and automatically configures the TXx/CKx I/O pin as an output. If the TXx/CKx pin is shared with an analog peripheral the analog I/O function must be disabled by clearing the corresponding ANSEL bit.

Note:	The TXxIF transmitter interrupt flag is set when the TXEN enable bit is set.

16.1.1.2 Transmitting Data

A transmission is initiated by writing a character to the TXREGx register. If this is the first character, or the previous character has been completely flushed from the TSR, the data in the TXREGx is immediately transferred to the TSR register. If the TSR still contains all or part of a previous character, the new character data is held in the TXREGx until the Stop bit of the previous character has been transmitted. The pending character in the TXREGx is then transferred to the TSR in one TCY immediately following the Stop bit transmission. The transmission of the Start bit, data bits and Stop bit sequence commences immediately following the transfer of the data to the TSR from the TXREGx.

16.1.1.3 Transmit Data Polarity

The polarity of the transmit data can be controlled with the CKTXP bit of the BAUDCONx register. The default state of this bit is '0' which selects high true transmit idle and data bits. Setting the CKTXP bit to '1' will invert the transmit data resulting in low true idle and data bits. The CKTXP bit controls transmit data polarity only in Asynchronous mode. In Synchronous mode the CKTXP bit has a different function.

16.1.1.4 Transmit Interrupt Flag

The TXxIF interrupt flag bit of the PIR1/PIR3 register is set whenever the EUSART transmitter is enabled and no character is being held for transmission in the TXREGx. In other words, the TXxIF bit is only clear when the TSR is busy with a character and a new character has been queued for transmission in the TXREGx. The TXxIF flag bit is not cleared immediately upon writing TXREGx. TXxIF becomes valid in the second instruction cycle following the write execution. Polling TXxIF immediately following the TXREGx write will return invalid results. The TXxIF bit is read-only, it cannot be set or cleared by software.

The TXxIF interrupt can be enabled by setting the TXxIE interrupt enable bit of the PIE1/PIE3 register. However, the TXxIF flag bit will be set whenever the TXREGx is empty, regardless of the state of TXxIE enable bit.

To use interrupts when transmitting data, set the TXxIE bit only when there is more data to send. Clear the TXxIE interrupt enable bit upon writing the last character of the transmission to the TXREGx.

16.1.1.5 TSR Status

The TRMT bit of the TXSTAx register indicates the status of the TSR register. This is a read-only bit. The TRMT bit is set when the TSR register is empty and is cleared when a character is transferred to the TSR register from the TXREGx. The TRMT bit remains clear until all bits have been shifted out of the TSR register. No interrupt logic is tied to this bit, so the user needs to poll this bit to determine the TSR status.

Note:	The TSR register is not mapped in data memory, so it is not available to the user.

16.1.1.6 Transmitting 9-Bit Characters

The EUSART supports 9-bit character transmissions. When the TX9 bit of the TXSTAx register is set the EUSART will shift nine bits out for each character transmitted. The TX9D bit of the TXSTAx register is the ninth, and Most Significant, data bit. When transmitting 9-bit data, the TX9D data bit must be written before writing the eight Least Significant bits into the TXREGx. All nine bits of data will be transferred to the TSR shift register immediately after the TXREGx is written.

A special 9-bit Address mode is available for use with multiple receivers. See **Section 16.1.2.8 "Address Detection"** for more information on the Address mode.

16.1.1.7 Asynchronous Transmission Setup:

1. Initialize the SPBRGHx:SPBRGx register pair and the BRGH and BRG16 bits to achieve the desired baud rate (see **Section 16.4 "EUSART Baud Rate Generator (BRG)"**).
2. Set the RXx/DTx and TXx/CKx TRIS controls to '1'.
3. Enable the asynchronous serial port by clearing the SYNC bit and setting the SPEN bit.
4. If 9-bit transmission is desired, set the TX9 control bit. A set ninth data bit will indicate that the eight Least Significant data bits are an address when the receiver is set for address detection.
5. Set the CKTXP control bit if inverted transmit data polarity is desired.
6. Enable the transmission by setting the TXEN control bit. This will cause the TXxIF interrupt bit to be set.
7. If interrupts are desired, set the TXxIE interrupt enable bit. An interrupt will occur immediately provided that the GIE/GIEH and PEIE/GIEL bits of the INTCON register are also set.
8. If 9-bit transmission is selected, the ninth bit should be loaded into the TX9D data bit.
9. Load 8-bit data into the TXREGx register. This will start the transmission.

FIGURE 16-3: ASYNCHRONOUS TRANSMISSION

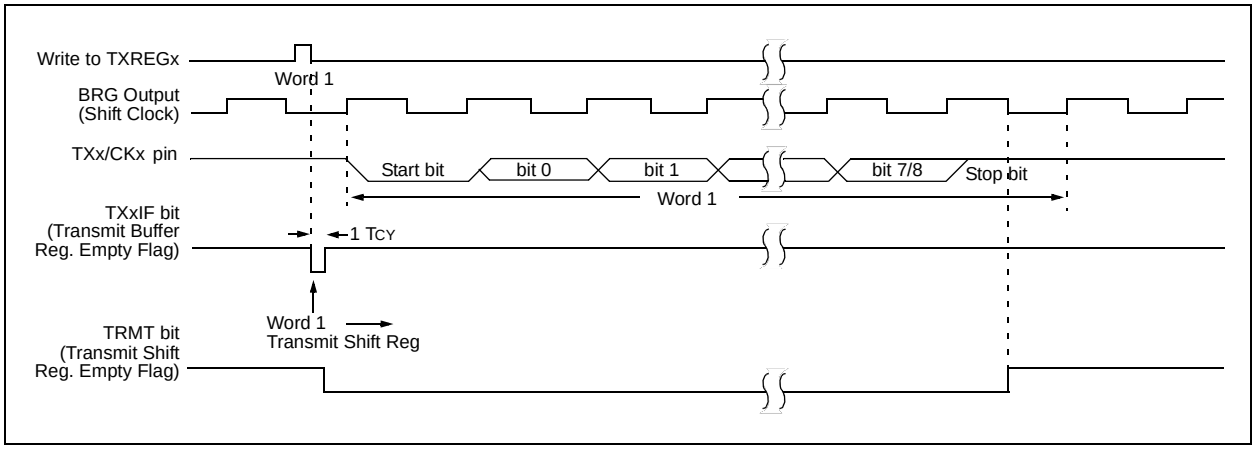

© 2010-2016 Microchip Technology Inc.

FIGURE 16-4: ASYNCHRONOUS TRANSMISSION (BACK-TO-BACK)

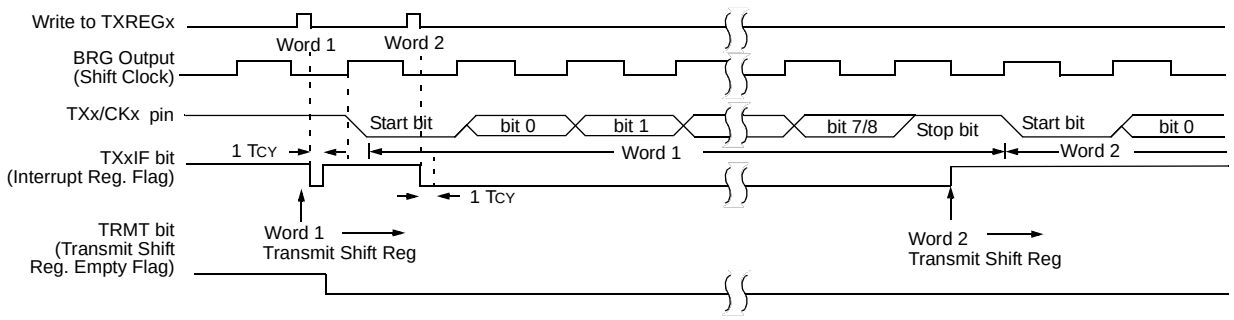

Note: This timing diagram shows two consecutive transmissions.

TABLE 16-1: REGISTERS ASSOCIATED WITH ASYNCHRONOUS TRANSMISSION

Name	Bit 7	Bit 6	Bit 5	Bit 4	Bit 3	Bit 2	Bit 1	Bit 0	Reset Values on Page
BAUDCON1	ABDOVF	RCIDL	DTRXP	CKTXP	BRG16	—	WUE	ABDEN	271
BAUDCON2	ABDOVF	RCIDL	DTRXP	CKTXP	BRG16	—	WUE	ABDEN	271
INTCON	GIE/GIEH	PEIE/GIEL	TMR0IE	INT0IE	RBIE	TMR0IF	INT0IF	RBIF	109
IPR1	—	ADIP	RC1IP	TX1IP	SSP1IP	CCP1IP	TMR2IP	TMR1IP	121
IPR3	SSP2IP	BCL2IP	RC2IP	TX2IP	CTMUIP	TMR5GIP	TMR3GIP	TMR1GIP	123
PIE1	—	ADIE	RC1IE	TX1IE	SSP1IE	CCP1IE	TMR2IE	TMR1IE	117
PIE3	SSP2IE	BCL2IE	RC2IE	TX2IE	CTMUIE	TMR5GIE	TMR3GIE	TMR1GIE	119
PIR1	—	ADIF	RC1IF	TX1IF	SSP1IF	CCP1IF	TMR2IF	TMR1IF	112
PIR3	SSP2IF	BCL2IF	RC2IF	TX2IF	CTMUIF	TMR5GIF	TMR3GIF	TMR1GIF	114
PMD0	UART2MD	UART1MD	TMR6MD	TMR5MD	TMR4MD	TMR3MD	TMR2MD	TMR1MD	52
RCSTA1	SPEN	RX9	SREN	CREN	ADDEN	FERR	OERR	RX9D	270
RCSTA2	SPEN	RX9	SREN	CREN	ADDEN	FERR	OERR	RX9D	270
SPBRG1	EUSART1 Baud Rate Generator, Low Byte								—
SPBRGH1	EUSART1 Baud Rate Generator, High Byte								—
SPBRG2	EUSART2 Baud Rate Generator, Low Byte								—
SPBRGH2	EUSART2 Baud Rate Generator, High Byte								—
TXREG1	EUSART1 Transmit Register								—
TXSTA1	CSRC	TX9	TXEN	SYNC	SENDB	BRGH	TRMT	TX9D	269
TXREG2	EUSART2 Transmit Register								—
TXSTA2	CSRC	TX9	TXEN	SYNC	SENDB	BRGH	TRMT	TX9D	269

Legend: — = unimplemented locations, read as '0'. Shaded bits are not used for asynchronous transmission.

16.1.2 EUSART ASYNCHRONOUS RECEIVER

The Asynchronous mode would typically be used in RS-232 systems. The receiver block diagram is shown in Figure 16-2. The data is received on the RXx/DTx pin and drives the data recovery block. The data recovery block is actually a high-speed shifter operating at 16 times the baud rate, whereas the serial Receive Shift Register (RSR) operates at the bit rate. When all eight or nine bits of the character have been shifted in, they are immediately transferred to a two character First-In-First-Out (FIFO) memory. The FIFO buffering allows reception of two complete characters and the start of a third character before software must start servicing the EUSART receiver. The FIFO and RSR registers are not directly accessible by software. Access to the received data is via the RCREGx register.

16.1.2.1 Enabling the Receiver

The EUSART receiver is enabled for asynchronous operation by configuring the following three control bits:

- CREN = 1
- SYNC = 0
- SPEN = 1

All other EUSART control bits are assumed to be in their default state.

Setting the CREN bit of the RCSTAx register enables the receiver circuitry of the EUSART. Clearing the SYNC bit of the TXSTAx register configures the EUSART for asynchronous operation. Setting the SPEN bit of the RCSTAx register enables the EUSART. The RXx/DTx I/O pin must be configured as an input by setting the corresponding TRIS control bit. If the RXx/DTx pin is shared with an analog peripheral the analog I/O function must be disabled by clearing the corresponding ANSEL bit.

16.1.2.2 Receiving Data

The receiver data recovery circuit initiates character reception on the falling edge of the first bit. The first bit, also known as the Start bit, is always a zero. The data recovery circuit counts one-half bit time to the center of the Start bit and verifies that the bit is still a zero. If it is not a zero then the data recovery circuit aborts character reception, without generating an error, and resumes looking for the falling edge of the Start bit. If the Start bit zero verification succeeds then the data recovery circuit counts a full bit time to the center of the next bit. The bit is then sampled by a majority detect circuit and the resulting '0' or '1' is shifted into the RSR. This repeats until all data bits have been sampled and shifted into the RSR. One final bit time is measured and the level sampled. This is the Stop bit, which is always a '1'. If the data recovery circuit samples a '0' in the Stop bit position then a framing error is set for this character, otherwise the framing error is cleared for this character. See **Section 16.1.2.5 "Receive Framing Error"** for more information on framing errors.

Immediately after all data bits and the Stop bit have been received, the character in the RSR is transferred to the EUSART receive FIFO and the RCxIF interrupt flag bit of the PIR1/PIR3 register is set. The top character in the FIFO is transferred out of the FIFO by reading the RCREGx register.

Note:	If the receive FIFO is overrun, no additional characters will be received until the overrun condition is cleared. See **Section 16.1.2.6 "Receive Overrun Error"** for more information on overrun errors.

16.1.2.3 Receive Data Polarity

The polarity of the receive data can be controlled with the DTRXP bit of the BAUDCONx register. The default state of this bit is '0' which selects high true receive idle and data bits. Setting the DTRXP bit to '1' will invert the receive data resulting in low true idle and data bits. The DTRXP bit controls receive data polarity only in Asynchronous mode. In Synchronous mode the DTRXP bit has a different function.

© 2010-2016 Microchip Technology Inc.

16.1.2.4 Receive Interrupts

The RCxIF interrupt flag bit of the PIR1/PIR3 register is set whenever the EUSART receiver is enabled and there is an unread character in the receive FIFO. The RCxIF interrupt flag bit is read-only, it cannot be set or cleared by software.

RCxIF interrupts are enabled by setting the following bits:

- RCxIE interrupt enable bit of the PIE1/PIE3 register
- PEIE/GIEL peripheral interrupt enable bit of the INTCON register
- GIE/GIEH global interrupt enable bit of the INTCON register

The RCxIF interrupt flag bit will be set when there is an unread character in the FIFO, regardless of the state of interrupt enable bits.

16.1.2.5 Receive Framing Error

Each character in the receive FIFO buffer has a corresponding framing error Status bit. A framing error indicates that a Stop bit was not seen at the expected time. The framing error status is accessed via the FERR bit of the RCSTAx register. The FERR bit represents the status of the top unread character in the receive FIFO. Therefore, the FERR bit must be read before reading the RCREG.x

The FERR bit is read-only and only applies to the top unread character in the receive FIFO. A framing error (FERR = 1) does not preclude reception of additional characters. It is not necessary to clear the FERR bit. Reading the next character from the FIFO buffer will advance the FIFO to the next character and the next corresponding framing error.

The FERR bit can be forced clear by clearing the SPEN bit of the RCSTAx register which resets the EUSART. Clearing the CREN bit of the RCSTAx register does not affect the FERR bit. A framing error by itself does not generate an interrupt.

Note:	If all receive characters in the receive FIFO have framing errors, repeated reads of the RCREGx will not clear the FERR bit.

16.1.2.6 Receive Overrun Error

The receive FIFO buffer can hold two characters. An overrun error will be generated if a third character, in its entirety, is received before the FIFO is accessed. When this happens the OERR bit of the RCSTAx register is set. The characters already in the FIFO buffer can be read but no additional characters will be received until the error is cleared. The error must be cleared by either clearing the CREN bit of the RCSTAx register or by resetting the EUSART by clearing the SPEN bit of the RCSTAx register.

16.1.2.7 Receiving 9-bit Characters

The EUSART supports 9-bit character reception. When the RX9 bit of the RCSTAx register is set, the EUSART will shift nine bits into the RSR for each character received. The RX9D bit of the RCSTAx register is the ninth and Most Significant data bit of the top unread character in the receive FIFO. When reading 9-bit data from the receive FIFO buffer, the RX9D data bit must be read before reading the eight Least Significant bits from the RCREGx.

16.1.2.8 Address Detection

A special Address Detection mode is available for use when multiple receivers share the same transmission line, such as in RS-485 systems. Address detection is enabled by setting the ADDEN bit of the RCSTAx register.

Address detection requires 9-bit character reception. When address detection is enabled, only characters with the ninth data bit set will be transferred to the receive FIFO buffer, thereby setting the RCxIF interrupt bit. All other characters will be ignored.

Upon receiving an address character, user software determines if the address matches its own. Upon address match, user software must disable address detection by clearing the ADDEN bit before the next Stop bit occurs. When user software detects the end of the message, determined by the message protocol used, software places the receiver back into the Address Detection mode by setting the ADDEN bit.

16.1.2.9 Asynchronous Reception Setup:

1. Initialize the SPBRGHx:SPBRGx register pair and the BRGH and BRG16 bits to achieve the desired baud rate (see **Section 16.4 "EUSART Baud Rate Generator (BRG)"**).
2. Set the RXx/DTx and TXx/CKx TRIS controls to '1'.
3. Enable the serial port by setting the SPEN bit and the RXx/DTx pin TRIS bit. The SYNC bit must be clear for asynchronous operation.
4. If interrupts are desired, set the RCxIE interrupt enable bit and set the GIE/GIEH and PEIE/GIEL bits of the INTCON register.
5. If 9-bit reception is desired, set the RX9 bit.
6. Set the DTRXP if inverted receive polarity is desired.
7. Enable reception by setting the CREN bit.
8. The RCxIF interrupt flag bit will be set when a character is transferred from the RSR to the receive buffer. An interrupt will be generated if the RCxIE interrupt enable bit was also set.
9. Read the RCSTAx register to get the error flags and, if 9-bit data reception is enabled, the ninth data bit.
10. Get the received eight Least Significant data bits from the receive buffer by reading the RCREGx register.
11. If an overrun occurred, clear the OERR flag by clearing the CREN receiver enable bit.

16.1.2.10 9-bit Address Detection Mode Setup

This mode would typically be used in RS-485 systems. To set up an Asynchronous Reception with Address Detect Enable:

1. Initialize the SPBRGHx, SPBRGx register pair and the BRGH and BRG16 bits to achieve the desired baud rate (see **Section 16.4 "EUSART Baud Rate Generator (BRG)"**).
2. Set the RXx/DTx and TXx/CKx TRIS controls to '1'.
3. Enable the serial port by setting the SPEN bit. The SYNC bit must be clear for asynchronous operation.
4. If interrupts are desired, set the RCxIE interrupt enable bit and set the GIE/GIEH and PEIE/GIEL bits of the INTCON register.
5. Enable 9-bit reception by setting the RX9 bit.
6. Enable address detection by setting the ADDEN bit.
7. Set the DTRXP if inverted receive polarity is desired.
8. Enable reception by setting the CREN bit.
9. The RCxIF interrupt flag bit will be set when a character with the ninth bit set is transferred from the RSR to the receive buffer. An interrupt will be generated if the RCxIE interrupt enable bit was also set.
10. Read the RCSTAx register to get the error flags. The ninth data bit will always be set.
11. Get the received eight Least Significant data bits from the receive buffer by reading the RCREGx register. Software determines if this is the device's address.
12. If an overrun occurred, clear the OERR flag by clearing the CREN receiver enable bit.
13. If the device has been addressed, clear the ADDEN bit to allow all received data into the receive buffer and generate interrupts.

© 2010-2016 Microchip Technology Inc.

FIGURE 16-5: ASYNCHRONOUS RECEPTION

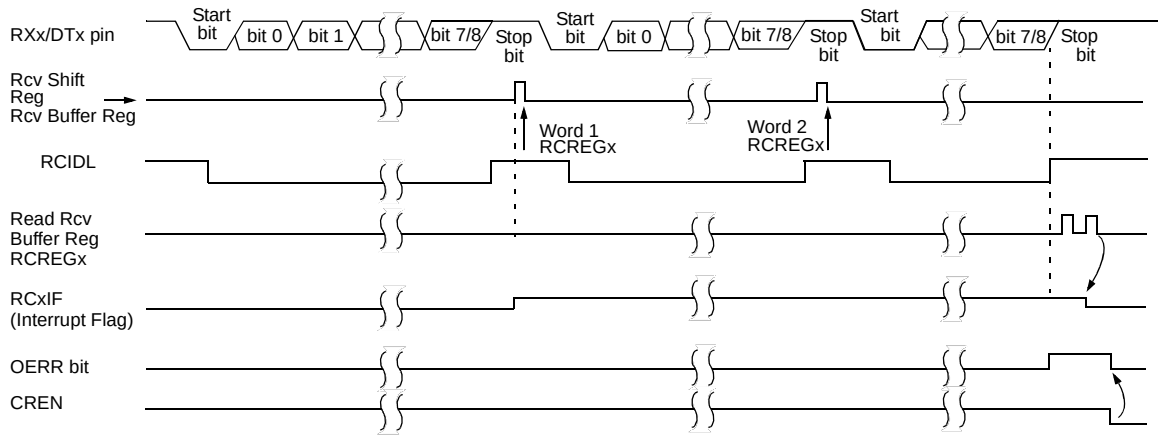

Note: This timing diagram shows three words appearing on the RXx/DTx input. The RCREGx (receive buffer) is read after the third word, causing the OERR (overrun) bit to be set.

TABLE 16-2: REGISTERS ASSOCIATED WITH ASYNCHRONOUS RECEPTION

Name	Bit 7	Bit 6	Bit 5	Bit 4	Bit 3	Bit 2	Bit 1	Bit 0	Register on Page
BAUDCON1	ABDOVF	RCIDL	DTRXP	CKTXP	BRG16	—	WUE	ABDEN	271
BAUDCON2	ABDOVF	RCIDL	DTRXP	CKTXP	BRG16	—	WUE	ABDEN	271
INTCON	GIE/GIEH	PEIE/GIEL	TMR0IE	INT0IE	RBIE	TMR0IF	INT0IF	RBIF	109
IPR1	—	ADIP	RC1IP	TX1IP	SSP1IP	CCP1IP	TMR2IP	TMR1IP	121
IPR3	SSP2IP	BCL2IP	RC2IP	TX2IP	CTMUIP	TMR5GIP	TMR3GIP	TMR1GIP	123
PIE1	—	ADIE	RC1IE	TX1IE	SSP1IE	CCP1IE	TMR2IE	TMR1IE	117
PIE3	SSP2IE	BCL2IE	RC2IE	TX2IE	CTMUIE	TMR5GIE	TMR3GIE	TMR1GIE	119
PIR1	—	ADIF	RC1IF	TX1IF	SSP1IF	CCP1IF	TMR2IF	TMR1IF	112
PIR3	SSP2IF	BCL2IF	RC2IF	TX2IF	CTMUIF	TMR5GIF	TMR3GIF	TMR1GIF	114
PMD0	UART2MD	UART1MD	TMR6MD	TMR5MD	TMR4MD	TMR3MD	TMR2MD	TMR1MD	52
RCREG1	EUSART1 Receive Register								—
RCSTA1	SPEN	RX9	SREN	CREN	ADDEN	FERR	OERR	RX9D	270
RCREG2	EUSART2 Receive Register								—
RCSTA2	SPEN	RX9	SREN	CREN	ADDEN	FERR	OERR	RX9D	270
SPBRG1	EUSART1 Baud Rate Generator, Low Byte								—
SPBRGH1	EUSART1 Baud Rate Generator, High Byte								—
SPBRG2	EUSART2 Baud Rate Generator, Low Byte								—
SPBRGH2	EUSART2 Baud Rate Generator, High Byte								—
TRISB(2)	TRISB7	TRISB6	TRISB5	TRISB4	TRISB3	TRISB2	TRISB1	TRISB0	151
TRISC	TRISC7	TRISC6	TRISC5	TRISC4	TRISC3	TRISC2	TRISC1	TRISC0	151
TRISD(1)	TRISD7	TRISD6	TRISD5	TRISD4	TRISD3	TRISD2	TRISD1	TRISD0	151
ANSELC	ANSC7	ANSC6	ANSC5	ANSC4	ANSC3	ANSC2	—	—	150
ANSELD(1)	ANSD7	ANSD6	ANSD5	ANSD4	ANSD3	ANSD2	ANSD1	ANSD0	150
TXSTA1	CSRC	TX9	TXEN	SYNC	SENDB	BRGH	TRMT	TX9D	269
TXSTA2	CSRC	TX9	TXEN	SYNC	SENDB	BRGH	TRMT	TX9D	269

Legend: — = unimplemented locations, read as '0'. Shaded bits are not used for asynchronous reception.

Note 1: PIC18(L)F4XK22 devices.

2: PIC18(L)F2XK22 devices.

16.2 Clock Accuracy with Asynchronous Operation

The factory calibrates the internal oscillator block output (HFINTOSC). However, the HFINTOSC frequency may drift as VDD or temperature changes, and this directly affects the asynchronous baud rate. Two methods may be used to adjust the baud rate clock, but both require a reference clock source of some kind.

The first (preferred) method uses the OSCTUNE register to adjust the HFINTOSC output. Adjusting the value in the OSCTUNE register allows for fine resolution changes to the system clock source. See **Section 2.6 "Internal Clock Modes"** for more information.

The other method adjusts the value in the Baud Rate Generator. This can be done automatically with the Auto-Baud Detect feature (see **Section 16.4.1 "Auto-Baud Detect"**). There may not be fine enough resolution when adjusting the Baud Rate Generator to compensate for a gradual change in the peripheral clock frequency.

© 2010-2016 Microchip Technology Inc.

16.3 Register Definitions: EUSART Control

REGISTER 16-1: TxSTAx: TRANSMIT STATUS AND CONTROL REGISTER

R/W-0	R/W-0	R/W-0	R/W-0	R/W-0	R/W-0	R-1	R/W-0
CSRC	TX9	TXEN(1)	SYNC	SENDB	BRGH	TRMT	TX9D
bit 7							bit 0

Legend:			
R = Readable bit	W = Writable bit	U = Unimplemented bit, read as ‘0’	
-n = Value at POR	‘1’ = Bit is set	‘0’ = Bit is cleared	x = Bit is unknown

bit 7 **CSRC:** Clock Source Select bit
Asynchronous mode:
Don’t care
Synchronous mode:
1 = Master mode (clock generated internally from BRG)
0 = Slave mode (clock from external source)

bit 6 **TX9:** 9-bit Transmit Enable bit
1 = Selects 9-bit transmission
0 = Selects 8-bit transmission

bit 5 **TXEN:** Transmit Enable bit(1)
1 = Transmit enabled
0 = Transmit disabled

bit 4 **SYNC:** EUSART Mode Select bit
1 = Synchronous mode
0 = Asynchronous mode

bit 3 **SENDB:** Send Break Character bit
Asynchronous mode:
1 = Send Sync Break on next transmission (cleared by hardware upon completion)
0 = Sync Break transmission completed
Synchronous mode:
Don’t care

bit 2 **BRGH:** High Baud Rate Select bit
Asynchronous mode:
1 = High speed
0 = Low speed
Synchronous mode:
Unused in this mode

bit 1 **TRMT:** Transmit Shift Register Status bit
1 = TSR empty
0 = TSR full

bit 0 **TX9D:** Ninth bit of Transmit Data
Can be address/data bit or a parity bit.

Note 1: SREN/CREN overrides TXEN in Sync mode.

REGISTER 16-2: RCSTAx: RECEIVE STATUS AND CONTROL REGISTER

R/W-0	R/W-0	R/W-0	R/W-0	R/W-0	R-0	R-0	R-0
SPEN	RX9	SREN	CREN	ADDEN	FERR	OERR	RX9D
bit 7							bit 0

Legend:			
R = Readable bit	W = Writable bit	U = Unimplemented bit, read as ‘0’	
-n = Value at POR	‘1’ = Bit is set	‘0’ = Bit is cleared	x = Bit is unknown

bit 7 **SPEN:** Serial Port Enable bit
`1` = Serial port enabled (configures RXx/DTx and TXx/CKx pins as serial port pins)
`0` = Serial port disabled (held in Reset)

bit 6 **RX9:** 9-bit Receive Enable bit
`1` = Selects 9-bit reception
`0` = Selects 8-bit reception

bit 5 **SREN:** Single Receive Enable bit
Asynchronous mode:
Don’t care
Synchronous mode – Master:
`1` = Enables single receive
`0` = Disables single receive
This bit is cleared after reception is complete.
Synchronous mode – Slave
Don’t care

bit 4 **CREN:** Continuous Receive Enable bit
Asynchronous mode:
`1` = Enables receiver
`0` = Disables receiver
Synchronous mode:
`1` = Enables continuous receive until enable bit CREN is cleared (CREN overrides SREN)
`0` = Disables continuous receive

bit 3 **ADDEN:** Address Detect Enable bit
Asynchronous mode 9-bit (RX9 = `1`):
`1` = Enables address detection, enable interrupt and load the receive buffer when RSR<8> is set
`0` = Disables address detection, all bytes are received and ninth bit can be used as parity bit
Asynchronous mode 8-bit (RX9 = `0`):
Don’t care

bit 2 **FERR:** Framing Error bit
`1` = Framing error (can be updated by reading RCREGx register and receive next valid byte)
`0` = No framing error

bit 1 **OERR:** Overrun Error bit
`1` = Overrun error (can be cleared by clearing bit CREN)
`0` = No overrun error

bit 0 **RX9D:** Ninth bit of Received Data
This can be address/data bit or a parity bit and must be calculated by user firmware.

© 2010-2016 Microchip Technology Inc.

REGISTER 16-3: BAUDCONx: BAUD RATE CONTROL REGISTER

R/W-0	R-1	R/W-0	R/W-0	R/W-0	U-0	R/W-0	R/W-0
ABDOVF	RCIDL	DTRXP	CKTXP	BRG16	—	WUE	ABDEN
bit 7							bit 0

Legend:			
R = Readable bit	W = Writable bit	U = Unimplemented bit, read as ‘0’	
-n = Value at POR	‘1’ = Bit is set	‘0’ = Bit is cleared	x = Bit is unknown

bit 7 **ABDOVF:** Auto-Baud Detect Overflow bit
Asynchronous mode:
1 = Auto-baud timer overflowed
0 = Auto-baud timer did not overflow
Synchronous mode:
Don’t care

bit 6 **RCIDL**: Receive Idle Flag bit
Asynchronous mode:
1 = Receiver is Idle
0 = Start bit has been detected and the receiver is active
Synchronous mode:
Don’t care

bit 5 **DTRXP**: Data/Receive Polarity Select bit
Asynchronous mode:
1 = Receive data (RXx) is inverted (active-low)
0 = Receive data (RXx) is not inverted (active-high)
Synchronous mode:
1 = Data (DTx) is inverted (active-low)
0 = Data (DTx) is not inverted (active-high)

bit 4 **CKTXP**: Clock/Transmit Polarity Select bit
Asynchronous mode:
1 = Idle state for transmit (TXx) is low
0 = Idle state for transmit (TXx) is high
Synchronous mode:
1 = Data changes on the falling edge of the clock and is sampled on the rising edge of the clock
0 = Data changes on the rising edge of the clock and is sampled on the falling edge of the clock

bit 3 **BRG16:** 16-bit Baud Rate Generator bit
1 = 16-bit Baud Rate Generator is used (SPBRGHx:SPBRGx)
0 = 8-bit Baud Rate Generator is used (SPBRGx)

bit 2 **Unimplemented:** Read as ‘0’

bit 1 **WUE:** Wake-up Enable bit
Asynchronous mode:
1 = Receiver is waiting for a falling edge. No character will be received but RCxIF will be set on the falling edge. WUE will automatically clear on the rising edge.
0 = Receiver is operating normally
Synchronous mode:
Don’t care

bit 0 **ABDEN**: Auto-Baud Detect Enable bit
Asynchronous mode:
1 = Auto-Baud Detect mode is enabled (clears when auto-baud is complete)
0 = Auto-Baud Detect mode is disabled
Synchronous mode:
Don’t care

16.4 EUSART Baud Rate Generator (BRG)

The Baud Rate Generator (BRG) is an 8-bit or 16-bit timer that is dedicated to the support of both the asynchronous and synchronous EUSART operation. By default, the BRG operates in 8-bit mode. Setting the BRG16 bit of the BAUDCONx register selects 16-bit mode.

The SPBRGHx:SPBRGx register pair determines the period of the free running baud rate timer. In Asynchronous mode the multiplier of the baud rate period is determined by both the BRGH bit of the TXSTAx register and the BRG16 bit of the BAUDCONx register. In Synchronous mode, the BRGH bit is ignored.

Table 16-3 contains the formulas for determining the baud rate. Example 16-1 provides a sample calculation for determining the baud rate and baud rate error.

Typical baud rates and error values for various Asynchronous modes have been computed for your convenience and are shown in Table 16-5. It may be advantageous to use the high baud rate (BRGH = 1), or the 16-bit BRG (BRG16 = 1) to reduce the baud rate error. The 16-bit BRG mode is used to achieve slow baud rates for fast oscillator frequencies.

Writing a new value to the SPBRGHx, SPBRGx register pair causes the BRG timer to be reset (or cleared). This ensures that the BRG does not wait for a timer overflow before outputting the new baud rate.

If the system clock is changed during an active receive operation, a receive error or data loss may result. To avoid this problem, check the status of the RCIDL bit to make sure that the receive operation is Idle before changing the system clock.

EXAMPLE 16-1: CALCULATING BAUD RATE ERROR

For a device with FOSC of 16 MHz, desired baud rate of 9600, Asynchronous mode, 8-bit BRG:

$$\text{Desired Baud Rate} = \frac{F_{OSC}}{64([SPBRGHx:SPBRGx] + 1)}$$

Solving for SPBRGHx:SPBRGx:

$$X = \frac{\frac{F_{OSC}}{\text{Desired Baud Rate}}}{64} - 1$$

$$= \frac{\frac{16000000}{9600}}{64} - 1$$

$$= [25.042] = 25$$

$$\text{Calculated Baud Rate} = \frac{16000000}{64(25 + 1)}$$

$$= 9615$$

$$\text{Error} = \frac{\text{Calc. Baud Rate} - \text{Desired Baud Rate}}{\text{Desired Baud Rate}}$$

$$= \frac{(9615 - 9600)}{9600} = 0.16\%$$

TABLE 16-3: BAUD RATE FORMULAS

Configuration Bits			BRG/EUSART Mode	Baud Rate Formula
SYNC	BRG16	BRGH		
0	0	0	8-bit/Asynchronous	FOSC/[64 (n+1)]
0	0	1	8-bit/Asynchronous	FOSC/[16 (n+1)]
0	1	0	16-bit/Asynchronous	
0	1	1	16-bit/Asynchronous	FOSC/[4 (n+1)]
1	0	x	8-bit/Synchronous	
1	1	x	16-bit/Synchronous	

Legend: x = Don't care, n = value of SPBRGHx, SPBRGx register pair.

© 2010-2016 Microchip Technology Inc.

TABLE 16-4: REGISTERS ASSOCIATED WITH BAUD RATE GENERATOR

Name	Bit 7	Bit 6	Bit 5	Bit 4	Bit 3	Bit 2	Bit 1	Bit 0	Reset Values on Page
BAUDCON1	ABDOVF	RCIDL	DTRXP	CKTXP	BRG16	—	WUE	ABDEN	271
BAUDCON2	ABDOVF	RCIDL	DTRXP	CKTXP	BRG16	—	WUE	ABDEN	271
PMD0	UART2MD	UART1MD	TMR6MD	TMR5MD	TMR4MD	TMR3MD	TMR2MD	TMR1MD	52
RCSTA1	SPEN	RX9	SREN	CREN	ADDEN	FERR	OERR	RX9D	270
RCSTA2	SPEN	RX9	SREN	CREN	ADDEN	FERR	OERR	RX9D	270
SPBRG1	EUSART1 Baud Rate Generator, Low Byte								—
SPBRGH1	EUSART1 Baud Rate Generator, High Byte								—
SPBRG2	EUSART2 Baud Rate Generator, Low Byte								—
SPBRGH2	EUSART2 Baud Rate Generator, High Byte								—
PIR1	—	ADIF	RC1IF	TX1IF	SSP1IF	CCP1IF	TMR2IF	TMR1IF	112
PIR3	SSP2IF	BCL2IF	RC2IF	TX2IF	CTMUIF	TMR5GIF	TMR3GIF	TMR1GIF	114
TXSTA1	CSRC	TX9	TXEN	SYNC	SENDB	BRGH	TRMT	TX9D	269
TXSTA2	CSRC	TX9	TXEN	SYNC	SENDB	BRGH	TRMT	TX9D	269

Legend: — = unimplemented, read as '0'. Shaded bits are not used by the BRG.

TABLE 16-5: BAUD RATES FOR ASYNCHRONOUS MODES

BAUD RATE	SYNC = 0, BRGH = 0, BRG16 = 0											
	Fosc = 64.000 MHz			Fosc = 18.432 MHz			Fosc = 16.000 MHz			Fosc = 11.0592 MHz		
	Actual Rate	% Error	SPBRxG value (decimal)	Actual Rate	% Error	SPBRGx value (decimal)	Actual Rate	% Error	SPBRGx value (decimal)	Actual Rate	% Error	SPBRGx value (decimal)
300	—	—	—	—	—	—	—	—	—	—	—	—
1200	—	—	—	1200	0.00	239	1202	0.16	207	1200	0.00	143
2400	—	—	—	2400	0.00	119	2404	0.16	103	2400	0.00	71
9600	9615	0.16	103	9600	0.00	29	9615	0.16	25	9600	0.00	17
10417	10417	0.00	95	10286	-1.26	27	10417	0.00	23	10165	-2.42	16
19.2k	19.23k	0.16	51	19.20k	0.00	14	19.23k	0.16	12	19.20k	0.00	8
57.6k	58.82k	2.12	16	57.60k	0.00	7	—	—	—	57.60k	0.00	2
115.2k	111.11k	-3.55	8	—	—	—	—	—	—	—	—	—

BAUD RATE	SYNC = 0, BRGH = 0, BRG16 = 0											
	Fosc = 8.000 MHz			Fosc = 4.000 MHz			Fosc = 3.6864 MHz			Fosc = 1.000 MHz		
	Actual Rate	% Error	SPBRGx value (decimal)	Actual Rate	% Error	SPBRGx value (decimal)	Actual Rate	% Error	SPBRGx value (decimal)	Actual Rate	% Error	SPBRGx value (decimal)
300	—	—	—	300	0.16	207	300	0.00	191	300	0.16	51
1200	1202	0.16	103	1202	0.16	51	1200	0.00	47	1202	0.16	12
2400	2404	0.16	51	2404	0.16	25	2400	0.00	23	—	—	—
9600	9615	0.16	12	—	—	—	9600	0.00	5	—	—	—
10417	10417	0.00	11	10417	0.00	5	—	—	—	—	—	—
19.2k	—	—	—	—	—	—	19.20k	0.00	2	—	—	—
57.6k	—	—	—	—	—	—	57.60k	0.00	0	—	—	—
115.2k	—	—	—	—	—	—	—	—	—	—	—	—

TABLE 16-5: BAUD RATES FOR ASYNCHRONOUS MODES (CONTINUED)

BAUD RATE	SYNC = 0, BRGH = 1, BRG16 = 0											
	FOSC = 64.000 MHz			FOSC = 18.432 MHz			FOSC = 16.000 MHz			FOSC = 11.0592 MHz		
	Actual Rate	% Error	SPBRGx value (decimal)	Actual Rate	% Error	SPBRGx value (decimal)	Actual Rate	% Error	SPBRGx value (decimal)	Actual Rate	% Error	SPBRGx value (decimal)
300	—	—	—	—	—	—	—	—	—	—	—	—
1200	—	—	—	—	—	—	—	—	—	—	—	—
2400	—	—	—	—	—	—	—	—	—	—	—	—
9600	—	—	—	9600	0.00	119	9615	0.16	103	9600	0.00	71
10417	—	—	—	10378	-0.37	110	10417	0.00	95	10473	0.53	65
19.2k	19.23k	0.16	207	19.20k	0.00	59	19.23k	0.16	51	19.20k	0.00	35
57.6k	57.97k	0.64	68	57.60k	0.00	19	58.82k	2.12	16	57.60k	0.00	11
115.2k	114.29k	-0.79	34	115.2k	0.00	9	111.1k	-3.55	8	115.2k	0.00	5

BAUD RATE	SYNC = 0, BRGH = 1, BRG16 = 0											
	FOSC = 8.000 MHz			FOSC = 4.000 MHz			FOSC = 3.6864 MHz			FOSC = 1.000 MHz		
	Actual Rate	% Error	SPBRGx value (decimal)	Actual Rate	% Error	SPBRGx value (decimal)	Actual Rate	% Error	SxBRGx value (decimal)	Actual Rate	% Error	SPBRGx value (decimal)
300	—	—	—	—	—	—	—	—	—	300	0.16	207
1200	—	—	—	1202	0.16	207	1200	0.00	191	1202	0.16	51
2400	2404	0.16	207	2404	0.16	103	2400	0.00	95	2404	0.16	25
9600	9615	0.16	51	9615	0.16	25	9600	0.00	23	—	—	—
10417	10417	0.00	47	10417	0.00	23	10473	0.53	21	10417	0.00	5
19.2k	19231	0.16	25	19.23k	0.16	12	19.2k	0.00	11	—	—	—
57.6k	55556	-3.55	8	—	—	—	57.60k	0.00	3	—	—	—
115.2k	—	—	—	—	—	—	115.2k	0.00	1	—	—	—

BAUD RATE	SYNC = 0, BRGH = 0, BRG16 = 1											
	FOSC = 64.000 MHz			FOSC = 18.432 MHz			FOSC = 16.000 MHz			FOSC = 11.0592 MHz		
	Actual Rate	% Error	SPBRGHx: SPBRGx (decimal)	Actual Rate	% Error	SPBRGHx: SPBRGx (decimal)	Actual Rate	% Error	SPBRGHx :SPBRGx (decimal)	Actual Rate	% Error	SPBRGHx: SPBRGx (decimal)
300	300.0	0.00	13332	300.0	0.00	3839	300.03	0.01	3332	300.0	0.00	2303
1200	1200.1	0.01	3332	1200	0.00	959	1200.5	0.04	832	1200	0.00	575
2400	2399	-0.02	1666	2400	0.00	479	2398	-0.08	416	2400	0.00	287
9600	9592	-0.08	416	9600	0.00	119	9615	0.16	103	9600	0.00	71
10417	10417	0.00	383	10378	-0.37	110	10417	0.00	95	10473	0.53	65
19.2k	19.23k	0.16	207	19.20k	0.00	59	19.23k	0.16	51	19.20k	0.00	35
57.6k	57.97k	0.64	68	57.60k	0.00	19	58.82k	2.12	16	57.60k	0.00	11
115.2k	114.29k	-0.79	34	115.2k	0.00	9	111.11k	-3.55	8	115.2k	0.00	5

© 2010-2016 Microchip Technology Inc.

TABLE 16-5: BAUD RATES FOR ASYNCHRONOUS MODES (CONTINUED)

BAUD RATE	SYNC = 0, BRGH = 0, BRG16 = 1											
	FOSC = 8.000 MHz			FOSC = 4.000 MHz			FOSC = 3.6864 MHz			FOSC = 1.000 MHz		
	Actual Rate	% Error	SPBRGHx: SPBRGx (decimal)	Actual Rate	% Error	SPBRGHx: SPBRGx (decimal)	Actual Rate	% Error	SPBRGHx :SPBRGx (decimal)	Actual Rate	% Error	SPBRGHx: SPBRGx (decimal)
300	299.9	-0.02	1666	300.1	0.04	832	300.0	0.00	767	300.5	0.16	207
1200	1199	-0.08	416	1202	0.16	207	1200	0.00	191	1202	0.16	51
2400	2404	0.16	207	2404	0.16	103	2400	0.00	95	2404	0.16	25
9600	9615	0.16	51	9615	0.16	25	9600	0.00	23	—	—	—
10417	10417	0.00	47	10417	0.00	23	10473	0.53	21	10417	0.00	5
19.2k	19.23k	0.16	25	19.23k	0.16	12	19.20k	0.00	11	—	—	—
57.6k	55556	-3.55	8	—	—	—	57.60k	0.00	3	—	—	—
115.2k	—	—	—	—	—	—	115.2k	0.00	1	—	—	—

BAUD RATE	SYNC = 0, BRGH = 1, BRG16 = 1 or SYNC = 1, BRG16 = 1											
	FOSC = 64.000 MHz			FOSC = 18.432 MHz			FOSC = 16.000 MHz			FOSC = 11.0592 MHz		
	Actual Rate	% Error	SPBRGHx: SPBRGx (decimal)	Actual Rate	% Error	SPBRGHx: SPBRGx (decimal)	Actual Rate	% Error	SPBRGHx :SPBRGx (decimal)	Actual Rate	% Error	SPBRGHx: SPBRGx (decimal)
300	300	0.00	53332	300.0	0.00	15359	300.0	0.00	13332	300.0	0.00	9215
1200	1200	0.00	13332	1200	0.00	3839	1200.1	0.01	3332	1200	0.00	2303
2400	2400	0.00	6666	2400	0.00	1919	2399.5	-0.02	1666	2400	0.00	1151
9600	9598.1	-0.02	1666	9600	0.00	479	9592	-0.08	416	9600	0.00	287
10417	10417	0.00	1535	10425	0.08	441	10417	0.00	383	10433	0.16	264
19.2k	19.21k	0.04	832	19.20k	0.00	239	19.23k	0.16	207	19.20k	0.00	143
57.6k	57.55k	-0.08	277	57.60k	0.00	79	57.97k	0.64	68	57.60k	0.00	47
115.2k	115.11k	-0.08	138	115.2k	0.00	39	114.29k	-0.79	34	115.2k	0.00	23

BAUD RATE	SYNC = 0, BRGH = 1, BRG16 = 1 or SYNC = 1, BRG16 = 1											
	FOSC = 8.000 MHz			FOSC = 4.000 MHz			FOSC = 3.6864 MHz			FOSC = 1.000 MHz		
	Actual Rate	% Error	SPBRGHx: SPBRGx (decimal)	Actual Rate	% Error	SPBRGHx: SPBRGx (decimal)	Actual Rate	% Error	SPBRGHx :SPBRGx (decimal)	Actual Rate	% Error	SPBRGHx: SPBRGx (decimal)
300	300.0	0.00	6666	300.0	0.01	3332	300.0	0.00	3071	300.1	0.04	832
1200	1200	-0.02	1666	1200	0.04	832	1200	0.00	767	1202	0.16	207
2400	2401	0.04	832	2398	0.08	416	2400	0.00	383	2404	0.16	103
9600	9615	0.16	207	9615	0.16	103	9600	0.00	95	9615	0.16	25
10417	10417	0.00	191	10417	0.00	95	10473	0.53	87	10417	0.00	23
19.2k	19.23k	0.16	103	19.23k	0.16	51	19.20k	0.00	47	19.23k	0.16	12
57.6k	57.14k	-0.79	34	58.82k	2.12	16	57.60k	0.00	15	—	—	—
115.2k	117.6k	2.12	16	111.1k	-3.55	8	115.2k	0.00	7	—	—	—

16.4.1 AUTO-BAUD DETECT

The EUSART module supports automatic detection and calibration of the baud rate.

In the Auto-Baud Detect (ABD) mode, the clock to the BRG is reversed. Rather than the BRG clocking the incoming RXx signal, the RXx signal is timing the BRG. The Baud Rate Generator is used to time the period of a received 55h (ASCII "U") which is the Sync character for the LIN bus. The unique feature of this character is that it has five rising edges including the Stop bit edge.

Setting the ABDEN bit of the BAUDCONx register starts the auto-baud calibration sequence (**Section 16.4.2 "Auto-baud Overflow"**). While the ABD sequence takes place, the EUSART state machine is held in Idle. On the first rising edge of the receive line, after the Start bit, the SPBRGx begins counting up using the BRG counter clock as shown in Table 16-6. The fifth rising edge will occur on the RXx/DTx pin at the end of the eighth bit period. At that time, an accumulated value totaling the proper BRG period is left in the SPBRGHx:SPBRGx register pair, the ABDEN bit is automatically cleared, and the RCxIF interrupt flag is set. A read operation on the RCREGx needs to be performed to clear the RCxIF interrupt. RCREGx content should be discarded. When calibrating for modes that do not use the SPBRGHx register the user can verify that the SPBRGx register did not overflow by checking for 00h in the SPBRGHx register.

The BRG auto-baud clock is determined by the BRG16 and BRGH bits as shown in Table 16-6. During ABD, both the SPBRGHx and SPBRGx registers are used as a 16-bit counter, independent of the BRG16 bit setting. While calibrating the baud rate period, the SPBRGHx and SPBRGx registers are clocked at 1/8th the BRG base clock rate. The resulting byte measurement is the average bit time when clocked at full speed.

Note 1: If the WUE bit is set with the ABDEN bit, auto-baud detection will occur on the byte following the Break character (see **Section 16.4.3 "Auto-Wake-up on Break"**).

2: It is up to the user to determine that the incoming character baud rate is within the range of the selected BRG clock source. Some combinations of oscillator frequency and EUSART baud rates are not possible.

3: During the auto-baud process, the auto-baud counter starts counting at one. Upon completion of the auto-baud sequence, to achieve maximum accuracy, subtract one from the SPBRGHx:SPBRGx register pair.

TABLE 16-6: BRG COUNTER CLOCK RATES

BRG16	BRGH	BRG Base Clock	BRG ABD Clock
0	0	FOSC/64	FOSC/512
0	1	FOSC/16	FOSC/128
1	0	FOSC/16	FOSC/128
1	1	FOSC/4	FOSC/32

Note: During the ABD sequence, SPBRGx and SPBRGHx registers are both used as a 16-bit counter, independent of BRG16 setting.

FIGURE 16-6: AUTOMATIC BAUD RATE CALIBRATION

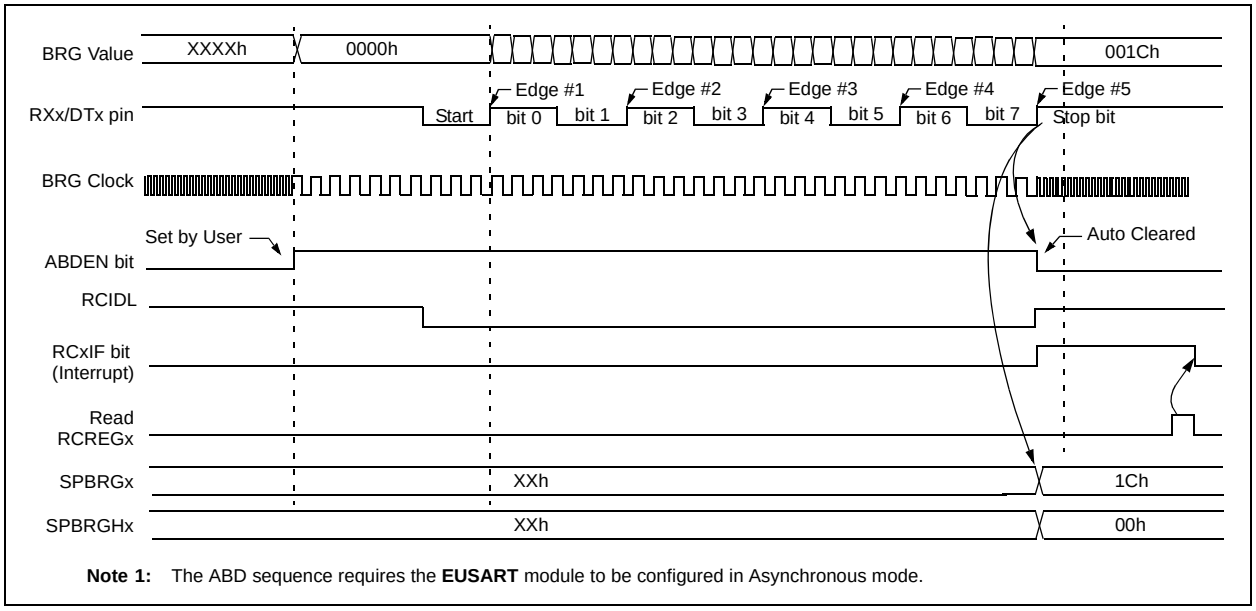

© 2010-2016 Microchip Technology Inc.

16.4.2 AUTO-BAUD OVERFLOW

During the course of automatic baud detection, the ABDOVF bit of the BAUDCONx register will be set if the baud rate counter overflows before the fifth rising edge is detected on the RX pin. The ABDOVF bit indicates that the counter has exceeded the maximum count that can fit in the 16 bits of the SPBRGHx:SPBRGx register pair. After the ABDOVF has been set, the counter continues to count until the fifth rising edge is detected on the RXx/DTx pin. Upon detecting the fifth RXx/DTx edge, the hardware will set the RCxIF interrupt flag and clear the ABDEN bit of the BAUDCONx register. The RCxIF flag can be subsequently cleared by reading the RCREGx. The ABDOVF flag can be cleared by software directly.

To terminate the auto-baud process before the RCxIF flag is set, clear the ABDEN bit then clear the ABDOVF bit. The ABDOVF bit will remain set if the ABDEN bit is not cleared first.

16.4.3 AUTO-WAKE-UP ON BREAK

During Sleep mode, all clocks to the EUSART are suspended. Because of this, the Baud Rate Generator is inactive and a proper character reception cannot be performed. The Auto-Wake-up feature allows the controller to wake-up due to activity on the RXx/DTx line. This feature is available only in Asynchronous mode.

The Auto-Wake-up feature is enabled by setting the WUE bit of the BAUDCONx register. Once set, the normal receive sequence on RXx/DTx is disabled, and the EUSART remains in an Idle state, monitoring for a wake-up event independent of the CPU mode. A wake-up event consists of a high-to-low transition on the RXx/DTx line. (This coincides with the start of a Sync Break or a wake-up signal character for the LIN protocol.)

The EUSART module generates an RCxIF interrupt coincident with the wake-up event. The interrupt is generated synchronously to the Q clocks in normal CPU operating modes (Figure 16-7), and asynchronously if the device is in Sleep mode (Figure 16-8). The interrupt condition is cleared by reading the RCREGx register.

The WUE bit is automatically cleared by the low-to-high transition on the RXx line at the end of the Break. This signals to the user that the Break event is over. At this point, the EUSART module is in Idle mode waiting to receive the next character.

16.4.3.1 Special Considerations

Break Character

To avoid character errors or character fragments during a wake-up event, the wake-up character must be all zeros.

When the wake-up is enabled the function works independent of the low time on the data stream. If the WUE bit is set and a valid non-zero character is received, the low time from the Start bit to the first rising edge will be interpreted as the wake-up event. The remaining bits in the character will be received as a fragmented character and subsequent characters can result in framing or overrun errors.

Therefore, the initial character in the transmission must be all ‘0’s. This must be 10 or more bit times, 13-bit times recommended for LIN bus, or any number of bit times for standard RS-232 devices.

Oscillator Start-up Time

Oscillator start-up time must be considered, especially in applications using oscillators with longer start-up intervals (i.e., LP, XT or HS/PLL mode). The Sync Break (or wake-up signal) character must be of sufficient length, and be followed by a sufficient interval, to allow enough time for the selected oscillator to start and provide proper initialization of the EUSART.

WUE Bit

The wake-up event causes a receive interrupt by setting the RCxIF bit. The WUE bit is cleared by hardware by a rising edge on RXx/DTx. The interrupt condition is then cleared by software by reading the RCREGx register and discarding its contents.

To ensure that no actual data is lost, check the RCIDL bit to verify that a receive operation is not in process before setting the WUE bit. If a receive operation is not occurring, the WUE bit may then be set just prior to entering the Sleep mode.

FIGURE 16-7: AUTO-WAKE-UP BIT (WUE) TIMING DURING NORMAL OPERATION

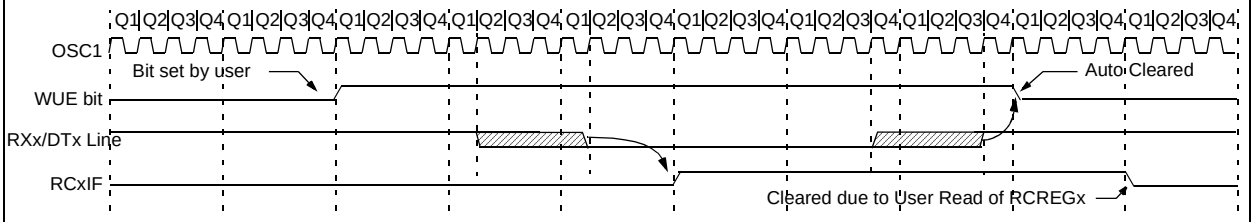

Note 1: The **EUSART** remains in Idle while the WUE bit is set.

FIGURE 16-8: AUTO-WAKE-UP BIT (WUE) TIMINGS DURING SLEEP

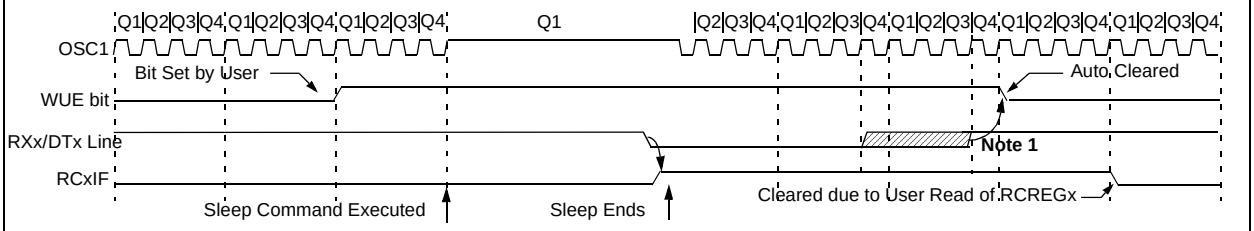

Note 1: If the wake-up event requires long oscillator warm-up time, the automatic clearing of the WUE bit can occur while the `stposc` signal is still active. This sequence should not depend on the presence of Q clocks.

2: The **EUSART** remains in Idle while the WUE bit is set.

© 2010-2016 Microchip Technology Inc.

16.4.4 BREAK CHARACTER SEQUENCE

The EUSART module has the capability of sending the special Break character sequences that are required by the LIN bus standard. A Break character consists of a Start bit, followed by 12 '0' bits and a Stop bit.

To send a Break character, set the SENDB and TXEN bits of the TXSTAx register. The Break character transmission is then initiated by a write to the TXREGx. The value of data written to TXREGx will be ignored and all '0's will be transmitted.

The SENDB bit is automatically reset by hardware after the corresponding Stop bit is sent. This allows the user to preload the transmit FIFO with the next transmit byte following the Break character (typically, the Sync character in the LIN specification).

The TRMT bit of the TXSTAx register indicates when the transmit operation is active or Idle, just as it does during normal transmission. See Figure 16-9 for the timing of the Break character sequence.

16.4.4.1 Break and Sync Transmit Sequence

The following sequence will start a message frame header made up of a Break, followed by an auto-baud Sync byte. This sequence is typical of a LIN bus master.

1. Configure the EUSART for the desired mode.
2. Set the TXEN and SENDB bits to enable the Break sequence.
3. Load the TXREGx with a dummy character to initiate transmission (the value is ignored).
4. Write '55h' to TXREGx to load the Sync character into the transmit FIFO buffer.
5. After the Break has been sent, the SENDB bit is reset by hardware and the Sync character is then transmitted.

When the TXREGx becomes empty, as indicated by the TXxIF, the next data byte can be written to TXREGx.

16.4.5 RECEIVING A BREAK CHARACTER

The Enhanced EUSART module can receive a Break character in two ways.

The first method to detect a Break character uses the FERR bit of the RCSTAx register and the Received data as indicated by RCREGx. The Baud Rate Generator is assumed to have been initialized to the expected baud rate.

A Break character has been received when;

- RCxIF bit is set
- FERR bit is set
- RCREGx = 00h

The second method uses the Auto-Wake-up feature described in **Section 16.4.3 "Auto-Wake-up on Break"**. By enabling this feature, the EUSART will sample the next two transitions on RXx/DTx, cause an RCxIF interrupt, and receive the next data byte followed by another interrupt.

Note that following a Break character, the user will typically want to enable the Auto-Baud Detect feature. For both methods, the user can set the ABDEN bit of the BAUDCONx register before placing the EUSART in Sleep mode.

FIGURE 16-9: SEND BREAK CHARACTER SEQUENCE

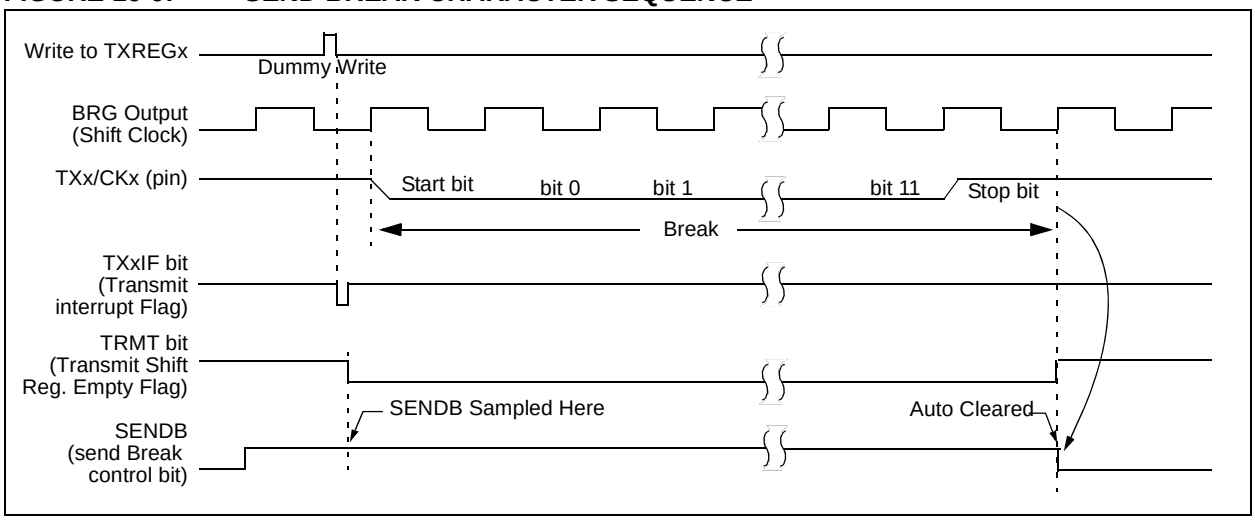

16.5 EUSART Synchronous Mode

Synchronous serial communications are typically used in systems with a single master and one or more slaves. The master device contains the necessary circuitry for baud rate generation and supplies the clock for all devices in the system. Slave devices can take advantage of the master clock by eliminating the internal clock generation circuitry.

There are two signal lines in Synchronous mode: a bidirectional data line and a clock line. Slaves use the external clock supplied by the master to shift the serial data into and out of their respective receive and transmit shift registers. Since the data line is bidirectional, synchronous operation is half-duplex only. Half-duplex refers to the fact that master and slave devices can receive and transmit data but not both simultaneously. The EUSART can operate as either a master or slave device.

Start and Stop bits are not used in synchronous transmissions.

16.5.1 SYNCHRONOUS MASTER MODE

The following bits are used to configure the EUSART for Synchronous Master operation:

- SYNC = 1
- CSRC = 1
- SREN = 0 (for transmit); SREN = 1 (for receive)
- CREN = 0 (for transmit); CREN = 1 (for receive)
- SPEN = 1

Setting the SYNC bit of the TXSTAx register configures the device for synchronous operation. Setting the CSRC bit of the TXSTAx register configures the device as a master. Clearing the SREN and CREN bits of the RCSTAx register ensures that the device is in the Transmit mode, otherwise the device will be configured to receive. Setting the SPEN bit of the RCSTAx register enables the EUSART. If the RXx/DTx or TXx/CKx pins are shared with an analog peripheral the analog I/O functions must be disabled by clearing the corresponding ANSEL bits.

The TRIS bits corresponding to the RXx/DTx and TXx/CKx pins should be set.

16.5.1.1 Master Clock

Synchronous data transfers use a separate clock line, which is synchronous with the data. A device configured as a master transmits the clock on the TXx/CKx line. The TXx/CKx pin output driver is automatically enabled when the EUSART is configured for synchronous transmit or receive operation. Serial data bits change on the leading edge to ensure they are valid at the trailing edge of each clock. One clock cycle is generated for each data bit. Only as many clock cycles are generated as there are data bits.

16.5.1.2 Clock Polarity

A clock polarity option is provided for Microwire compatibility. Clock polarity is selected with the CKTXP bit of the BAUDCONx register. Setting the CKTXP bit sets the clock Idle state as high. When the CKTXP bit is set, the data changes on the falling edge of each clock and is sampled on the rising edge of each clock. Clearing the CKTXP bit sets the Idle state as low. When the CKTXP bit is cleared, the data changes on the rising edge of each clock and is sampled on the falling edge of each clock.

16.5.1.3 Synchronous Master Transmission

Data is transferred out of the device on the RXx/DTx pin. The RXx/DTx and TXx/CKx pin output drivers are automatically enabled when the EUSART is configured for synchronous master transmit operation.

A transmission is initiated by writing a character to the TXREGx register. If the TSR still contains all or part of a previous character the new character data is held in the TXREGx until the last bit of the previous character has been transmitted. If this is the first character, or the previous character has been completely flushed from the TSR, the data in the TXREGx is immediately transferred to the TSR. The transmission of the character commences immediately following the transfer of the data to the TSR from the TXREGx.

Each data bit changes on the leading edge of the master clock and remains valid until the subsequent leading clock edge.

Note:	The TSR register is not mapped in data memory, so it is not available to the user.

16.5.1.4 Data Polarity

The polarity of the transmit and receive data can be controlled with the DTRXP bit of the BAUDCONx register. The default state of this bit is '0' which selects high true transmit and receive data. Setting the DTRXP bit to '1' will invert the data resulting in low true transmit and receive data.

© 2010-2016 Microchip Technology Inc.

16.5.1.5 Synchronous Master Transmission Setup:

1. Initialize the SPBRGHx, SPBRGx register pair and the BRGH and BRG16 bits to achieve the desired baud rate (see **Section 16.4 "EUSART Baud Rate Generator (BRG)"**).
2. Set the RXx/DTx and TXx/CKx TRIS controls to '1'.
3. Enable the synchronous master serial port by setting bits SYNC, SPEN and CSRC. Set the TRIS bits corresponding to the RXx/DTx and TXx/CKx I/O pins.
4. Disable Receive mode by clearing bits SREN and CREN.
5. Enable Transmit mode by setting the TXEN bit.
6. If 9-bit transmission is desired, set the TX9 bit.
7. If interrupts are desired, set the TXxIE, GIE/GIEH and PEIE/GIEL interrupt enable bits.
8. If 9-bit transmission is selected, the ninth bit should be loaded in the TX9D bit.
9. Start transmission by loading data to the TXREGx register.

FIGURE 16-10: SYNCHRONOUS TRANSMISSION

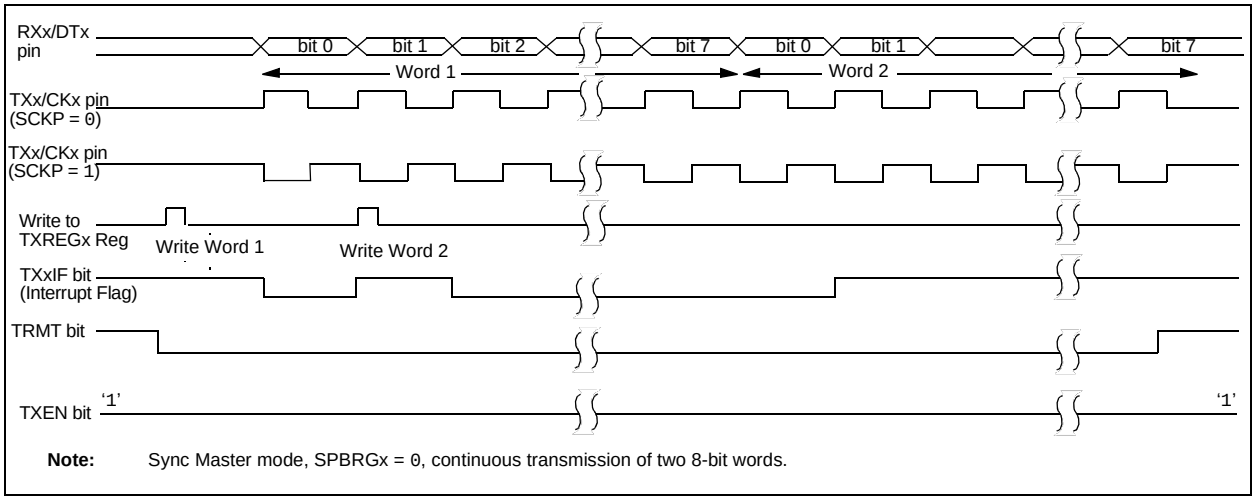

Note: Sync Master mode, SPBRGx = 0, continuous transmission of two 8-bit words.

FIGURE 16-11: SYNCHRONOUS TRANSMISSION (THROUGH TXEN)

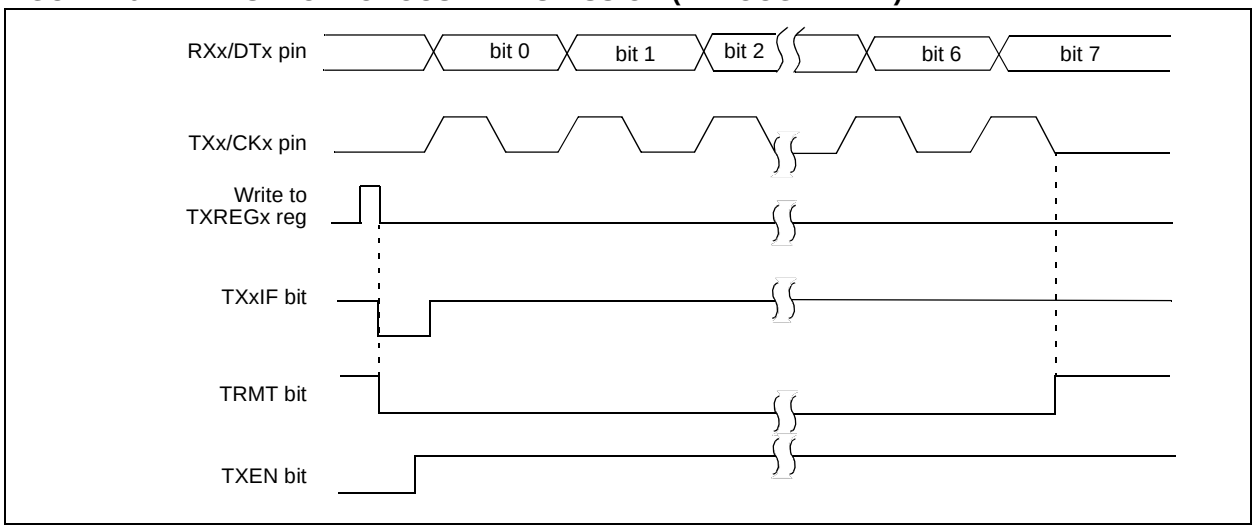

TABLE 16-7: REGISTERS ASSOCIATED WITH SYNCHRONOUS MASTER TRANSMISSION

Name	Bit 7	Bit 6	Bit 5	Bit 4	Bit 3	Bit 2	Bit 1	Bit 0	Register on Page
BAUDCON1	ABDOVF	RCIDL	DTRXP	CKTXP	BRG16	—	WUE	ABDEN	271
BAUDCON2	ABDOVF	RCIDL	DTRXP	CKTXP	BRG16	—	WUE	ABDEN	271
INTCON	GIE/GIEH	PEIE/GIEL	TMR0IE	INT0IE	RBIE	TMR0IF	INT0IF	RBIF	109
IPR1	—	ADIP	RC1IP	TX1IP	SSP1IP	CCP1IP	TMR2IP	TMR1IP	121
IPR3	SSP2IP	BCL2IP	RC2IP	TX2IP	CTMUIP	TMR5GIP	TMR3GIP	TMR1GIP	123
PIE1	—	ADIE	RC1IE	TX1IE	SSP1IE	CCP1IE	TMR2IE	TMR1IE	117
PIE3	SSP2IE	BCL2IE	RC2IE	TX2IE	CTMUIE	TMR5GIE	TMR3GIE	TMR1GIE	119
PIR1	—	ADIF	RC1IF	TX1IF	SSP1IF	CCP1IF	TMR2IF	TMR1IF	112
PIR3	SSP2IF	BCL2IF	RC2IF	TX2IF	CTMUIF	TMR5GIF	TMR3GIF	TMR1GIF	114
PMD0	UART2MD	UART1MD	TMR6MD	TMR5MD	TMR4MD	TMR3MD	TMR2MD	TMR1MD	52
RCSTA1	SPEN	RX9	SREN	CREN	ADDEN	FERR	OERR	RX9D	270
RCSTA2	SPEN	RX9	SREN	CREN	ADDEN	FERR	OERR	RX9D	270
SPBRG1	EUSART1 Baud Rate Generator, Low Byte								—
SPBRGH1	EUSART1 Baud Rate Generator, High Byte								—
SPBRG2	EUSART2 Baud Rate Generator, Low Byte								—
SPBRGH2	EUSART2 Baud Rate Generator, High Byte								—
TRISB(2)	TRISB7	TRISB6	TRISB5	TRISB4	TRISB3	TRISB2	TRISB1	TRISB0	151
TRISC	TRISC7	TRISC6	TRISC5	TRISC4	TRISC3	TRISC2	TRISC1	TRISC0	151
TRISD(1)	TRISD7	TRISD6	TRISD5	TRISD4	TRISD3	TRISD2	TRISD1	TRISD0	151
ANSELC	ANSC7	ANSC6	ANSC5	ANSC4	ANSC3	ANSC2	—	—	150
ANSELD(1)	ANSD7	ANSD6	ANSD5	ANSD4	ANSD3	ANSD2	ANSD1	ANSD0	150
TXREG1	EUSART1 Transmit Register								—
TXSTA1	CSRC	TX9	TXEN	SYNC	SENDB	BRGH	TRMT	TX9D	269
TXREG2	EUSART2 Transmit Register								—
TXSTA2	CSRC	TX9	TXEN	SYNC	SENDB	BRGH	TRMT	TX9D	269

Legend: — = unimplemented locations, read as '0'. Shaded bits are not used for synchronous master transmission.

Note 1: PIC18(L)F4XK22 devices.

2: PIC18(L)F2XK22 devices.

© 2010-2016 Microchip Technology Inc.

16.5.1.6 Synchronous Master Reception

Data is received at the RXx/DTx pin. The RXx/DTx pin output driver must be disabled by setting the corresponding TRIS bits when the EUSART is configured for synchronous master receive operation.

In Synchronous mode, reception is enabled by setting either the Single Receive Enable bit (SREN of the RCSTAx register) or the Continuous Receive Enable bit (CREN of the RCSTAx register).

When SREN is set and CREN is clear, only as many clock cycles are generated as there are data bits in a single character. The SREN bit is automatically cleared at the completion of one character. When CREN is set, clocks are continuously generated until CREN is cleared. If CREN is cleared in the middle of a character the CK clock stops immediately and the partial character is discarded. If SREN and CREN are both set, then SREN is cleared at the completion of the first character and CREN takes precedence.

To initiate reception, set either SREN or CREN. Data is sampled at the RXx/DTx pin on the trailing edge of the TXx/CKx clock pin and is shifted into the Receive Shift Register (RSR). When a complete character is received into the RSR, the RCxIF bit is set and the character is automatically transferred to the two character receive FIFO. The Least Significant eight bits of the top character in the receive FIFO are available in RCREGx. The RCxIF bit remains set as long as there are un-read characters in the receive FIFO.

16.5.1.7 Slave Clock

Synchronous data transfers use a separate clock line, which is synchronous with the data. A device configured as a slave receives the clock on the TXx/CKx line. The TXx/CKx pin output driver must be disabled by setting the associated TRIS bit when the device is configured for synchronous slave transmit or receive operation. Serial data bits change on the leading edge to ensure they are valid at the trailing edge of each clock. One data bit is transferred for each clock cycle. Only as many clock cycles should be received as there are data bits.

16.5.1.8 Receive Overrun Error

The receive FIFO buffer can hold two characters. An overrun error will be generated if a third character, in its entirety, is received before RCREGx is read to access the FIFO. When this happens the OERR bit of the RCSTAx register is set. Previous data in the FIFO will not be overwritten. The two characters in the FIFO buffer can be read, however, no additional characters will be received until the error is cleared. The OERR bit can only be cleared by clearing the overrun condition. If the overrun error occurred when the SREN bit is set and CREN is clear then the error is cleared by reading RCREGx.

If the overrun occurred when the CREN bit is set then the error condition is cleared by either clearing the CREN bit of the RCSTAx register or by clearing the SPEN bit which resets the EUSART.

16.5.1.9 Receiving 9-bit Characters

The EUSART supports 9-bit character reception. When the RX9 bit of the RCSTAx register is set the EUSART will shift 9-bits into the RSR for each character received. The RX9D bit of the RCSTAx register is the ninth, and Most Significant, data bit of the top unread character in the receive FIFO. When reading 9-bit data from the receive FIFO buffer, the RX9D data bit must be read before reading the eight Least Significant bits from the RCREGx.

16.5.1.10 Synchronous Master Reception Setup:

1. Initialize the SPBRGHx, SPBRGx register pair for the appropriate baud rate. Set or clear the BRGH and BRG16 bits, as required, to achieve the desired baud rate.
2. Set the RXx/DTx and TXx/CKx TRIS controls to ‘1’.
3. Enable the synchronous master serial port by setting bits SYNC, SPEN and CSRC. Disable RXx/DTx and TXx/CKx output drivers by setting the corresponding TRIS bits.
4. Ensure bits CREN and SREN are clear.
5. If using interrupts, set the GIE/GIEH and PEIE/GIEL bits of the INTCON register and set RCxIE.
6. If 9-bit reception is desired, set bit RX9.
7. Start reception by setting the SREN bit or for continuous reception, set the CREN bit.
8. Interrupt flag bit RCxIF will be set when reception of a character is complete. An interrupt will be generated if the enable bit RCxIE was set.
9. Read the RCSTAx register to get the ninth bit (if enabled) and determine if any error occurred during reception.
10. Read the 8-bit received data by reading the RCREGx register.
11. If an overrun error occurs, clear the error by either clearing the CREN bit of the RCSTAx register or by clearing the SPEN bit which resets the EUSART.

FIGURE 16-12: SYNCHRONOUS RECEPTION (MASTER MODE, SREN)

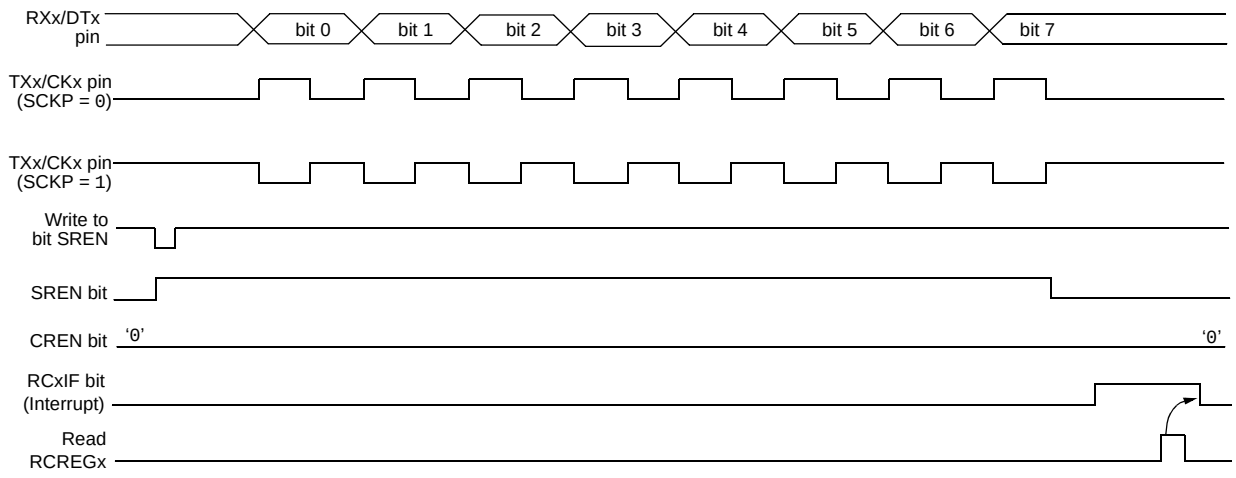

Note: Timing diagram demonstrates Sync Master mode with bit SREN = 1 and bit BRGH = 0.

TABLE 16-8: REGISTERS ASSOCIATED WITH SYNCHRONOUS MASTER RECEPTION

Name	Bit 7	Bit 6	Bit 5	Bit 4	Bit 3	Bit 2	Bit 1	Bit 0	Register on Page
BAUDCON1	ABDOVF	RCIDL	DTRXP	CKTXP	BRG16	—	WUE	ABDEN	271
BAUDCON2	ABDOVF	RCIDL	DTRXP	CKTXP	BRG16	—	WUE	ABDEN	271
INTCON	GIE/GIEH	PEIE/GIEL	TMR0IE	INT0IE	RBIE	TMR0IF	INT0IF	RBIF	109
IPR1	—	ADIP	RC1IP	TX1IP	SSP1IP	CCP1IP	TMR2IP	TMR1IP	121
IPR3	SSP2IP	BCL2IP	RC2IP	TX2IP	CTMUIP	TMR5GIP	TMR3GIP	TMR1GIP	123
PIE1	—	ADIE	RC1IE	TX1IE	SSP1IE	CCP1IE	TMR2IE	TMR1IE	117
PIE3	SSP2IE	BCL2IE	RC2IE	TX2IE	CTMUIE	TMR5GIE	TMR3GIE	TMR1GIE	119
PIR1	—	ADIF	RC1IF	TX1IF	SSP1IF	CCP1IF	TMR2IF	TMR1IF	112
PIR3	SSP2IF	BCL2IF	RC2IF	TX2IF	CTMUIF	TMR5GIF	TMR3GIF	TMR1GIF	114
PMD0	UART2MD	UART1MD	TMR6MD	TMR5MD	TMR4MD	TMR3MD	TMR2MD	TMR1MD	52
RCREG1	EUSART1 Receive Register								—
RCSTA1	SPEN	RX9	SREN	CREN	ADDEN	FERR	OERR	RX9D	270
RCREG2	EUSART2 Receive Register								—
RCSTA2	SPEN	RX9	SREN	CREN	ADDEN	FERR	OERR	RX9D	270
SPBRG1	EUSART1 Baud Rate Generator, Low Byte								—
SPBRGH1	EUSART1 Baud Rate Generator, High Byte								—
SPBRG2	EUSART2 Baud Rate Generator, Low Byte								—
SPBRGH2	EUSART2 Baud Rate Generator, High Byte								—
TXSTA1	CSRC	TX9	TXEN	SYNC	SENDB	BRGH	TRMT	TX9D	269
TXSTA2	CSRC	TX9	TXEN	SYNC	SENDB	BRGH	TRMT	TX9D	269

Legend: — = unimplemented locations, read as '0'. Shaded bits are not used for synchronous master reception.

© 2010-2016 Microchip Technology Inc.

16.5.2 SYNCHRONOUS SLAVE MODE

The following bits are used to configure the EUSART for Synchronous slave operation:

- SYNC = 1
- CSRC = 0
- SREN = 0 (for transmit); SREN = 1 (for receive)
- CREN = 0 (for transmit); CREN = 1 (for receive)
- SPEN = 1

Setting the SYNC bit of the TXSTAx register configures the device for synchronous operation. Clearing the CSRC bit of the TXSTAx register configures the device as a slave. Clearing the SREN and CREN bits of the RCSTAx register ensures that the device is in the Transmit mode, otherwise the device will be configured to receive. Setting the SPEN bit of the RCSTAx register enables the EUSART. If the RXx/DTx or TXx/CKx pins are shared with an analog peripheral the analog I/O functions must be disabled by clearing the corresponding ANSEL bits.

RXx/DTx and TXx/CKx pin output drivers must be disabled by setting the corresponding TRIS bits.

16.5.2.1 EUSART Synchronous Slave Transmit

The operation of the Synchronous Master and Slave modes are identical (see **Section 16.5.1.3 "Synchronous Master Transmission"**), except in the case of the Sleep mode.

If two words are written to the TXREGx and then the SLEEP instruction is executed, the following will occur:

1. The first character will immediately transfer to the TSR register and transmit.
2. The second word will remain in TXREGx register.
3. The TXxIF bit will not be set.
4. After the first character has been shifted out of TSR, the TXREGx register will transfer the second character to the TSR and the TXxIF bit will now be set.
5. If the PEIE/GIEL and TXxIE bits are set, the interrupt will wake the device from Sleep and execute the next instruction. If the GIE/GIEH bit is also set, the program will call the Interrupt Service Routine.

16.5.2.2 Synchronous Slave Transmission Setup:

1. Set the SYNC and SPEN bits and clear the CSRC bit.
2. Set the RXx/DTx and TXx/CKx TRIS controls to '1'.
3. Clear the CREN and SREN bits.
4. If using interrupts, ensure that the GIE/GIEH and PEIE/GIEL bits of the INTCON register are set and set the TXxIE bit.
5. If 9-bit transmission is desired, set the TX9 bit.
6. Enable transmission by setting the TXEN bit.
7. If 9-bit transmission is selected, insert the Most Significant bit into the TX9D bit.
8. Start transmission by writing the Least Significant eight bits to the TXREGx register.

TABLE 16-9: REGISTERS ASSOCIATED WITH SYNCHRONOUS SLAVE TRANSMISSION

Name	Bit 7	Bit 6	Bit 5	Bit 4	Bit 3	Bit 2	Bit 1	Bit 0	Register on Page
BAUDCON1	ABDOVF	RCIDL	DTRXP	CKTXP	BRG16	—	WUE	ABDEN	271
BAUDCON2	ABDOVF	RCIDL	DTRXP	CKTXP	BRG16	—	WUE	ABDEN	271
INTCON	GIE/GIEH	PEIE/GIEL	TMR0IE	INT0IE	RBIE	TMR0IF	INT0IF	RBIF	109
IPR1	—	ADIP	RC1IP	TX1IP	SSP1IP	CCP1IP	TMR2IP	TMR1IP	121
IPR3	SSP2IP	BCL2IP	RC2IP	TX2IP	CTMUIP	TMR5GIP	TMR3GIP	TMR1GIP	123
PIE1	—	ADIE	RC1IE	TX1IE	SSP1IE	CCP1IE	TMR2IE	TMR1IE	117
PIE3	SSP2IE	BCL2IE	RC2IE	TX2IE	CTMUIE	TMR5GIE	TMR3GIE	TMR1GIE	119
PIR1	—	ADIF	RC1IF	TX1IF	SSP1IF	CCP1IF	TMR2IF	TMR1IF	112
PIR3	SSP2IF	BCL2IF	RC2IF	TX2IF	CTMUIF	TMR5GIF	TMR3GIF	TMR1GIF	114
PMD0	UART2MD	UART1MD	TMR6MD	TMR5MD	TMR4MD	TMR3MD	TMR2MD	TMR1MD	52
RCSTA1	SPEN	RX9	SREN	CREN	ADDEN	FERR	OERR	RX9D	270
RCSTA2	SPEN	RX9	SREN	CREN	ADDEN	FERR	OERR	RX9D	270
SPBRG1	EUSART1 Baud Rate Generator, Low Byte								—
SPBRGH1	EUSART1 Baud Rate Generator, High Byte								—
SPBRG2	EUSART2 Baud Rate Generator, Low Byte								—
SPBRGH2	EUSART2 Baud Rate Generator, High Byte								—
ANSELC	ANSC7	ANSC6	ANSC5	ANSC4	ANSC3	ANSC2	—	—	150
ANSELD(1)	ANSD7	ANSD6	ANSD5	ANSD4	ANSD3	ANSD2	ANSD1	ANSD0	150
TRISB(2)	TRISB7	TRISB6	TRISB5	TRISB4	TRISB3	TRISB2	TRISB1	TRISB0	151
TRISC	TRISC7	TRISC6	TRISC5	TRISC4	TRISC3	TRISC2	TRISC1	TRISC0	151
TRISD(1)	TRISD7	TRISD6	TRISD5	TRISD4	TRISD3	TRISD2	TRISD1	TRISD0	151
TXREG1	EUSART1 Transmit Register								—
TXSTA1	CSRC	TX9	TXEN	SYNC	SENDB	BRGH	TRMT	TX9D	269
TXREG2	EUSART2 Transmit Register								—
TXSTA2	CSRC	TX9	TXEN	SYNC	SENDB	BRGH	TRMT	TX9D	269

Legend: — = unimplemented locations, read as '0'. Shaded bits are not used for synchronous slave transmission.

Note 1: PIC18(L)F4XK22 devices.

2: PIC18(L)F2XK22 devices.

© 2010-2016 Microchip Technology Inc.

16.5.2.3 EUSART Synchronous Slave Reception

The operation of the Synchronous Master and Slave modes is identical (**Section 16.5.1.6 "Synchronous Master Reception"**), with the following exceptions:

- Sleep
- CREN bit is always set, therefore the receiver is never Idle
- SREN bit, which is a "don't care" in Slave mode

A character may be received while in Sleep mode by setting the CREN bit prior to entering Sleep. Once the word is received, the RSR register will transfer the data to the RCREGx register. If the RCxIE enable bit is set, the interrupt generated will wake the device from Sleep and execute the next instruction. If the GIE/GIEH bit is also set, the program will branch to the interrupt vector.

16.5.2.4 Synchronous Slave Reception Setup:

1. Set the SYNC and SPEN bits and clear the CSRC bit.
2. Set the RXx/DTx and TXx/CKx TRIS controls to '1'.
3. If using interrupts, ensure that the GIE/GIEH and PEIE/GIEL bits of the INTCON register are set and set the RCxIE bit.
4. If 9-bit reception is desired, set the RX9 bit.
5. Set the CREN bit to enable reception.
6. The RCxIF bit will be set when reception is complete. An interrupt will be generated if the RCxIE bit was set.
7. If 9-bit mode is enabled, retrieve the Most Significant bit from the RX9D bit of the RCSTAx register.
8. Retrieve the eight Least Significant bits from the receive FIFO by reading the RCREGx register.
9. If an overrun error occurs, clear the error by either clearing the CREN bit of the RCSTAx register or by clearing the SPEN bit which resets the EUSART.

TABLE 16-10: REGISTERS ASSOCIATED WITH SYNCHRONOUS SLAVE RECEPTION

Name	Bit 7	Bit 6	Bit 5	Bit 4	Bit 3	Bit 2	Bit 1	Bit 0	Register on Page
BAUDCON1	ABDOVF	RCIDL	DTRXP	CKTXP	BRG16	—	WUE	ABDEN	271
BAUDCON2	ABDOVF	RCIDL	DTRXP	CKTXP	BRG16	—	WUE	ABDEN	271
INTCON	GIE/GIEH	PEIE/GIEL	TMR0IE	INT0IE	RBIE	TMR0IF	INT0IF	RBIF	109
IPR1	—	ADIP	RC1IP	TX1IP	SSP1IP	CCP1IP	TMR2IP	TMR1IP	121
IPR3	SSP2IP	BCL2IP	RC2IP	TX2IP	CTMUIP	TMR5GIP	TMR3GIP	TMR1GIP	123
PIE1	—	ADIE	RC1IE	TX1IE	SSP1IE	CCP1IE	TMR2IE	TMR1IE	117
PIE3	SSP2IE	BCL2IE	RC2IE	TX2IE	CTMUIE	TMR5GIE	TMR3GIE	TMR1GIE	119
PIR1	—	ADIF	RC1IF	TX1IF	SSP1IF	CCP1IF	TMR2IF	TMR1IF	112
PIR3	SSP2IF	BCL2IF	RC2IF	TX2IF	CTMUIF	TMR5GIF	TMR3GIF	TMR1GIF	114
PMD0	UART2MD	UART1MD	TMR6MD	TMR5MD	TMR4MD	TMR3MD	TMR2MD	TMR1MD	52
RCREG1	EUSART1 Receive Register								—
RCSTA1	SPEN	RX9	SREN	CREN	ADDEN	FERR	OERR	RX9D	270
RCREG2	EUSART2 Receive Register								—
RCSTA2	SPEN	RX9	SREN	CREN	ADDEN	FERR	OERR	RX9D	270
SPBRG1	EUSART1 Baud Rate Generator, Low Byte								—
SPBRGH1	EUSART1 Baud Rate Generator, High Byte								—
SPBRG2	EUSART2 Baud Rate Generator, Low Byte								—
SPBRGH2	EUSART2 Baud Rate Generator, High Byte								—
TXSTA1	CSRC	TX9	TXEN	SYNC	SENDB	BRGH	TRMT	TX9D	269
TXSTA2	CSRC	TX9	TXEN	SYNC	SENDB	BRGH	TRMT	TX9D	269

Legend: — = unimplemented locations, read as '0'. Shaded bits are not used for synchronous slave reception.

17.0 ANALOG-TO-DIGITAL CONVERTER (ADC) MODULE

The Analog-to-Digital Converter (ADC) allows conversion of an analog input signal to a 10-bit binary representation of that signal. This device uses analog inputs, which are multiplexed into a single sample and hold circuit. The output of the sample and hold is connected to the input of the converter. The converter generates a 10-bit binary result via successive approximation and stores the conversion result into the ADC result registers (ADRESL and ADRESH).

The ADC voltage reference is software selectable to either VDD or a voltage applied to the external reference pins.

The ADC can generate an interrupt upon completion of a conversion. This interrupt can be used to wake-up the device from Sleep.

Figure 17-1 shows the block diagram of the ADC.

FIGURE 17-1: ADC BLOCK DIAGRAM

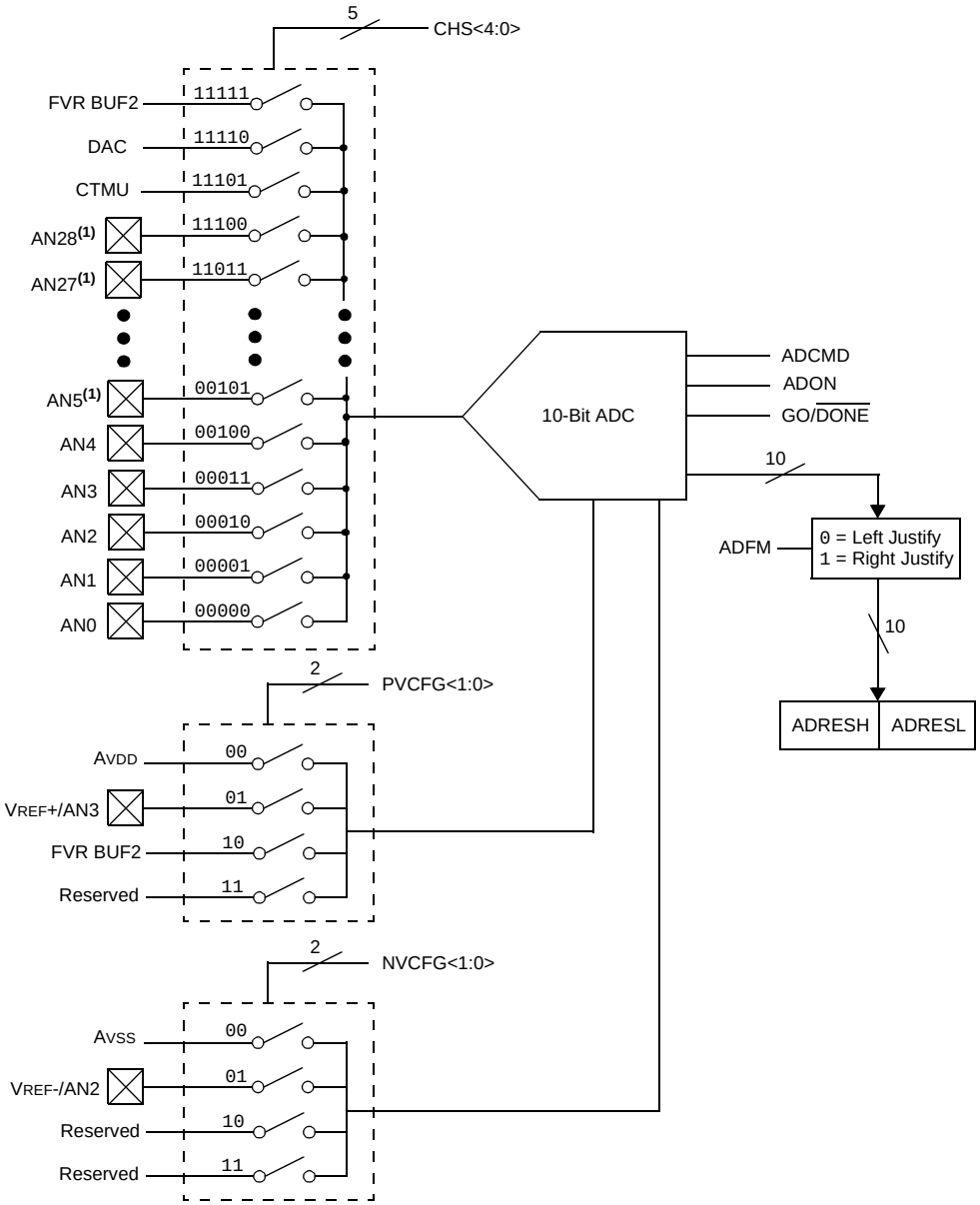

Note: Additional ADC channels AN5-AN7 and AN20-AN27 are only available on PIC18(L)F4XK22 devices.

© 2010-2016 Microchip Technology Inc.

17.1 ADC Configuration

When configuring and using the ADC the following functions must be considered:

- Port configuration
- Channel selection
- ADC voltage reference selection
- ADC conversion clock source
- Interrupt control
- Results formatting

17.1.1 PORT CONFIGURATION

The ANSELx and TRISx registers configure the A/D port pins. Any port pin needed as an analog input should have its corresponding ANSx bit set to disable the digital input buffer and TRISx bit set to disable the digital output driver. If the TRISx bit is cleared, the digital output level (V_{OH} or V_{OL}) will be converted.

The A/D operation is independent of the state of the ANSx bits and the TRIS bits.

Note 1:	When reading the PORT register, all pins with their corresponding ANSx bit set read as cleared (a low level). However, analog conversion of pins configured as digital inputs (ANSx bit cleared and TRISx bit set) will be accurately converted.
2:	Analog levels on any pin with the corresponding ANSx bit cleared may cause the digital input buffer to consume current out of the device's specification limits.
3:	The PBADEN bit in Configuration Register 3H configures PORTB pins to reset as analog or digital pins by controlling how the bits in ANSELB are reset.

17.1.2 CHANNEL SELECTION

The CHS bits of the ADCON0 register determine which channel is connected to the sample and hold circuit.

When changing channels, a delay is required before starting the next conversion. Refer to **Section 17.2 "ADC Operation"** for more information.

17.1.3 ADC VOLTAGE REFERENCE

The PVCFG<1:0> and NVCFG<1:0> bits of the ADCON1 register provide independent control of the positive and negative voltage references.

The positive voltage reference can be:

- V_{DD}
- the fixed voltage reference (FVR BUF2)
- an external voltage source (V_{REF+})

The negative voltage reference can be:

- V_{SS}
- an external voltage source (V_{REF-})

17.1.4 SELECTING AND CONFIGURING ACQUISITION TIME

The ADCON2 register allows the user to select an acquisition time that occurs each time the GO/$\overline{\text{DONE}}$ bit is set.

Acquisition time is set with the ACQT<2:0> bits of the ADCON2 register. Acquisition delays cover a range of 2 to 20 T_{AD}. When the GO/$\overline{\text{DONE}}$ bit is set, the A/D module continues to sample the input for the selected acquisition time, then automatically begins a conversion. Since the acquisition time is programmed, there is no need to wait for an acquisition time between selecting a channel and setting the GO/$\overline{\text{DONE}}$ bit.

Manual acquisition is selected when ACQT<2:0> = `000`. When the GO/$\overline{\text{DONE}}$ bit is set, sampling is stopped and a conversion begins. The user is responsible for ensuring the required acquisition time has passed between selecting the desired input channel and setting the GO/$\overline{\text{DONE}}$ bit. This option is also the default Reset state of the ACQT<2:0> bits and is compatible with devices that do not offer programmable acquisition times.

In either case, when the conversion is completed, the GO/$\overline{\text{DONE}}$ bit is cleared, the ADIF flag is set and the A/D begins sampling the currently selected channel again. When an acquisition time is programmed, there is no indication of when the acquisition time ends and the conversion begins.

17.1.5 CONVERSION CLOCK

The source of the conversion clock is software selectable via the ADCS bits of the ADCON2 register. There are seven possible clock options:

- FOSC/2
- FOSC/4
- FOSC/8
- FOSC/16
- FOSC/32
- FOSC/64
- FRC (dedicated internal oscillator)

The time to complete one bit conversion is defined as TAD. One full 10-bit conversion requires 11 TAD periods as shown in Figure 17-3.

For correct conversion, the appropriate TAD specification must be met. See A/D conversion requirements in Table 27-22 for more information. Table 17-1 gives examples of appropriate ADC clock selections.

Note: Unless using the FRC, any changes in the system clock frequency will change the ADC clock frequency, which may adversely affect the ADC result.

17.1.6 INTERRUPTS

The ADC module allows for the ability to generate an interrupt upon completion of an Analog-to-Digital Conversion. The ADC interrupt enable is the ADIE bit in the PIE1 register and the interrupt priority is the ADIP bit in the IPR1 register. The ADC interrupt flag is the ADIF bit in the PIR1 register. The ADIF bit must be cleared by software.

Note: The ADIF bit is set at the completion of every conversion, regardless of whether or not the ADC interrupt is enabled.

This interrupt can be generated while the device is operating or while in Sleep. If the device is in Sleep, the interrupt will wake-up the device. Upon waking from Sleep, the next instruction following the SLEEP instruction is always executed. If the user is attempting to wake-up from Sleep and resume in-line code execution, the global interrupt must be disabled. If the global interrupt is enabled, execution will switch to the Interrupt Service Routine.

TABLE 17-1: ADC CLOCK PERIOD (TAD) VS. DEVICE OPERATING FREQUENCIES

ADC Clock Period (TAD)		Device Frequency (FOSC)			
ADC Clock Source	**ADCS<2:0>**	**64 MHz**	**16 MHz**	**4 MHz**	**1 MHz**
FOSC/2	000	31.25 ns(2)	125 ns(2)	500 ns(2)	2.0 μs
FOSC/4	100	62.5 ns(2)	250 ns(2)	1.0 μs	4.0 μs(3)
FOSC/8	001	400 ns(2)	500 ns(2)	2.0 μs	8.0 μs(3)
FOSC/16	101	250 ns(2)	1.0 μs	4.0 μs(3)	16.0 μs(3)
FOSC/32	010	500 ns(2)	2.0 μs	8.0 μs(3)	32.0 μs(3)
FOSC/64	110	1.0 μs	4.0 μs(3)	16.0 μs(3)	64.0 μs(3)
FRC	x11	1-4 μs(1,4)	1-4 μs(1,4)	1-4 μs(1,4)	1-4 μs(1,4)

Legend: Shaded cells are outside of recommended range.

Note 1: The FRC source has a typical TAD time of 1.7 μs.

2: These values violate the minimum required TAD time.

3: For faster conversion times, the selection of another clock source is recommended.

4: The ADC clock period (TAD) and total ADC conversion time can be minimized when the ADC clock is derived from the system clock FOSC. However, the FRC oscillator source must be used when conversions are to be performed with the device in Sleep mode.

© 2010-2016 Microchip Technology Inc.

17.1.7 RESULT FORMATTING

The 10-bit A/D conversion result can be supplied in two formats, left justified or right justified. The ADFM bit of the ADCON2 register controls the output format.

Figure 17-2 shows the two output formats.

FIGURE 17-2: 10-BIT A/D CONVERSION RESULT FORMAT

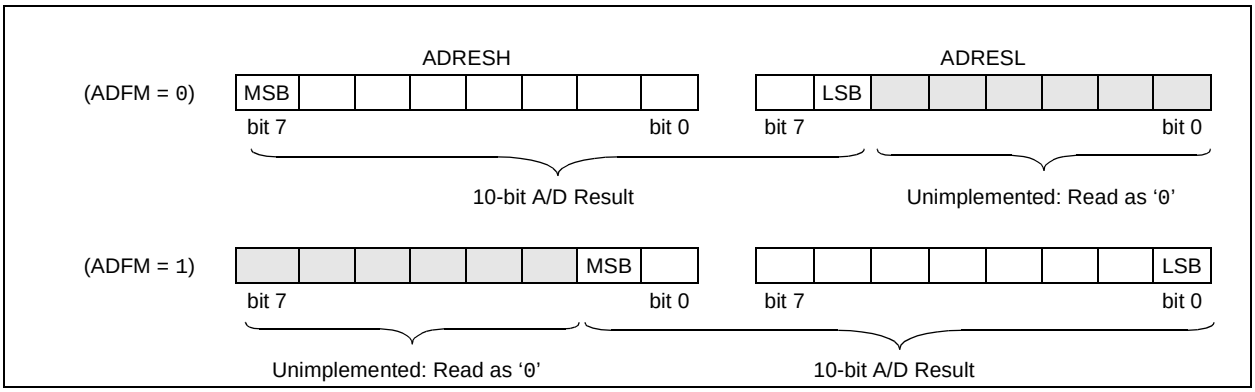

17.2 ADC Operation

17.2.1 STARTING A CONVERSION

To enable the ADC module, the ADON bit of the ADCON0 register must be set to a '1'. Setting the GO/$\overline{\text{DONE}}$ bit of the ADCON0 register to a '1' will, depending on the ACQT bits of the ADCON2 register, either immediately start the Analog-to-Digital conversion or start an acquisition delay followed by the Analog-to-Digital conversion.

Figure 17-3 shows the operation of the A/D converter after the GO bit has been set and the ACQT<2:0> bits are cleared. A conversion is started after the following instruction to allow entry into SLEEP mode before the conversion begins.

Figure 17-4 shows the operation of the A/D converter after the GO bit has been set and the ACQT<2:0> bits are set to '010' which selects a 4 TAD acquisition time before the conversion starts.

> **Note:** The GO/$\overline{\text{DONE}}$ bit should not be set in the same instruction that turns on the ADC. Refer to **Section 17.2.10 "A/D Conversion Procedure"**.

FIGURE 17-3: A/D CONVERSION TAD CYCLES (ACQT<2:0> = 000, TACQ = 0)

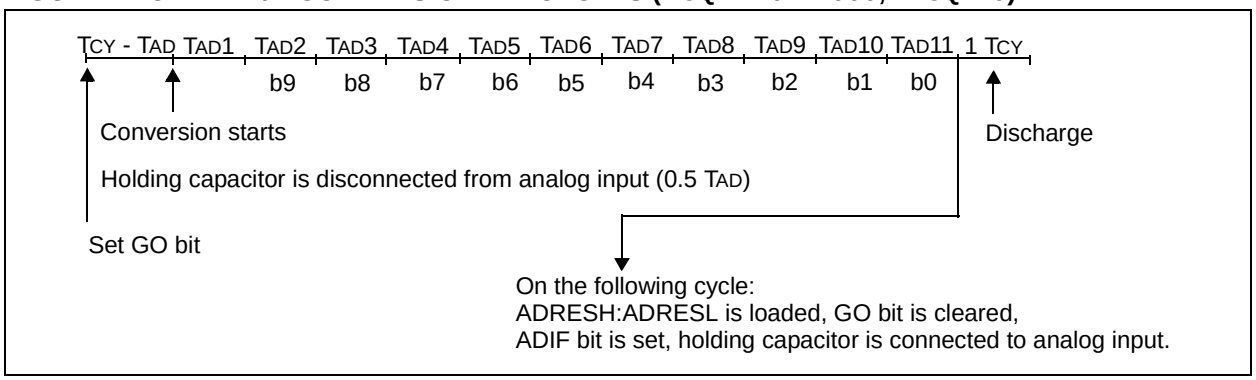

FIGURE 17-4: A/D CONVERSION TAD CYCLES (ACQT<2:0> = 010, TACQ = 4 TAD)

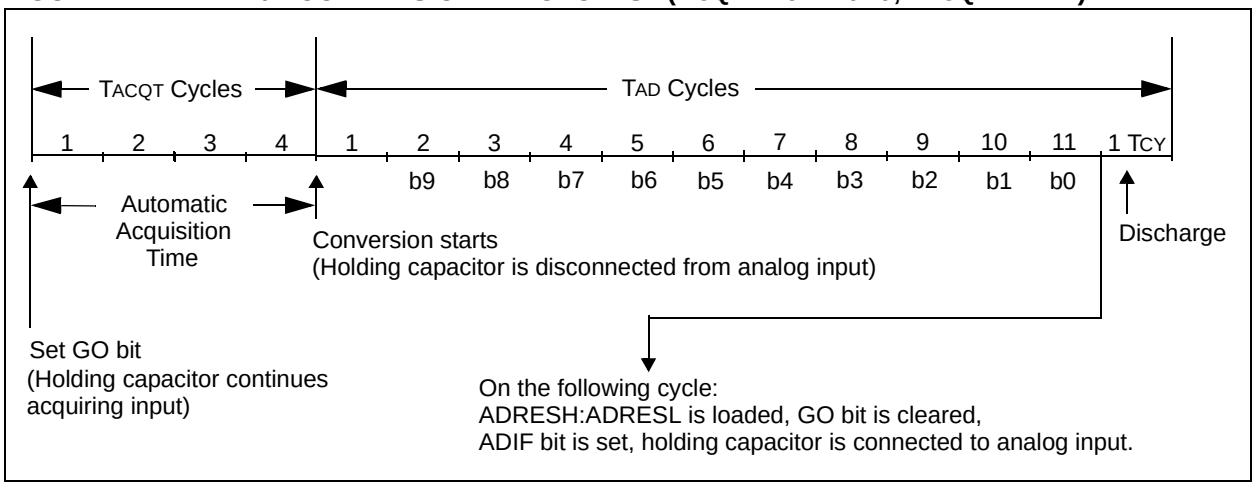

© 2010-2016 Microchip Technology Inc.

17.2.2 COMPLETION OF A CONVERSION

When the conversion is complete, the ADC module will:

- Clear the GO/$\overline{\text{DONE}}$ bit
- Set the ADIF flag bit
- Update the ADRESH:ADRESL registers with new conversion result

17.2.3 DISCHARGE

The discharge phase is used to initialize the value of the capacitor array. The array is discharged after every sample. This feature helps to optimize the unity-gain amplifier, as the circuit always needs to charge the capacitor array, rather than charge/discharge based on previous measure values.

17.2.4 TERMINATING A CONVERSION

If a conversion must be terminated before completion, the GO/$\overline{\text{DONE}}$ bit can be cleared by software. The ADRESH:ADRESL registers will not be updated with the partially complete Analog-to-Digital conversion sample. Instead, the ADRESH:ADRESL register pair will retain the value of the previous conversion.

Note:	A device Reset forces all registers to their Reset state. Thus, the ADC module is turned off and any pending conversion is terminated.

17.2.5 DELAY BETWEEN CONVERSIONS

After the A/D conversion is completed or aborted, a 2 TAD wait is required before the next acquisition can be started. After this wait, the currently selected channel is reconnected to the charge holding capacitor commencing the next acquisition.

17.2.6 ADC OPERATION IN POWER-MANAGED MODES

The selection of the automatic acquisition time and A/D conversion clock is determined in part by the clock source and frequency while in a power-managed mode.

If the A/D is expected to operate while the device is in a power-managed mode, the ACQT<2:0> and ADCS<2:0> bits in ADCON2 should be updated in accordance with the clock source to be used in that mode. After entering the mode, an A/D acquisition or conversion may be started. Once started, the device should continue to be clocked by the same clock source until the conversion has been completed.

If desired, the device may be placed into the corresponding Idle mode during the conversion. If the device clock frequency is less than 1 MHz, the A/D FRC clock source should be selected.

17.2.7 ADC OPERATION DURING SLEEP

The ADC module can operate during Sleep. This requires the ADC clock source to be set to the FRC option. When the FRC clock source is selected, the ADC waits one additional instruction before starting the conversion. This allows the SLEEP instruction to be executed, which can reduce system noise during the conversion. If the ADC interrupt is enabled, the device will wake-up from Sleep when the conversion completes. If the ADC interrupt is disabled, the ADC module is turned off after the conversion completes, although the ADON bit remains set.

When the ADC clock source is something other than FRC, a SLEEP instruction causes the present conversion to be aborted and the ADC module is turned off, although the ADON bit remains set.

17.2.8 SPECIAL EVENT TRIGGER

Two Special Event Triggers are available to start an A/D conversion: CTMU and CCP5. The Special Event Trigger source is selected using the TRIGSEL bit in ADCON1.

When TRIGSEL = 0, the CCP5 module is selected as the Special Event Trigger source. To enable the Special Event Trigger in the CCP module, set CCP5M<3:0> = 1011, in the CCP5CON register.

When TRIGSEL = 1, the CTMU module is selected. The CTMU module requires that the CTTRIG bit in CTMUCONH is set to enable the Special Event Trigger.

In addition to TRIGSEL bit, the following steps are required to start an A/D conversion:

- The A/D module must be enabled (ADON = 1)
- The appropriate analog input channel selected
- The minimum acquisition period set one of these ways:
  - Timing provided by the user
  - Selection made of an appropriate TACQ time

With these conditions met, the trigger sets the GO/$\overline{\text{DONE}}$ bit and the A/D acquisition starts.

If the A/D module is not enabled (ADON = 0), the module ignores the Special Event Trigger.

17.2.9 PERIPHERAL MODULE DISABLE

When a peripheral module is not used or inactive, the module can be disabled by setting the Module Disable bit in the PMD registers. This will reduce power consumption to an absolute minimum. Setting the PMD bits holds the module in Reset and disconnects the module's clock source. The Module Disable bit for the ADC module is ADCMD in the PMD2 Register. See **Section 3.0 "Power-Managed Modes"** for more information.

17.2.10 A/D CONVERSION PROCEDURE

This is an example procedure for using the ADC to perform an Analog-to-Digital conversion:

1. Configure Port:
   - Disable pin output driver (See TRIS register)
   - Configure pin as analog
2. Configure the ADC module:
   - Select ADC conversion clock
   - Configure voltage reference
   - Select ADC input channel
   - Select result format
   - Select acquisition delay
   - Turn on ADC module
3. Configure ADC interrupt (optional):
   - Clear ADC interrupt flag
   - Enable ADC interrupt
   - Enable peripheral interrupt
   - Enable global interrupt(1)
4. Wait the required acquisition time(2).
5. Start conversion by setting the GO/$\overline{\text{DONE}}$ bit.
6. Wait for ADC conversion to complete by one of the following:
   - Polling the GO/$\overline{\text{DONE}}$ bit
   - Waiting for the ADC interrupt (interrupts enabled)
7. Read ADC Result
8. Clear the ADC interrupt flag (required if interrupt is enabled).

Note 1: The global interrupt can be disabled if the user is attempting to wake-up from Sleep and resume in-line code execution.

2: Software delay required if ACQT bits are set to zero delay. See **Section 17.4 "A/D Acquisition Requirements"**.

EXAMPLE 17-1: A/D CONVERSION

```
;This code block configures the ADC
;for polling, Vdd and Vss as reference, Frc
clock and AN0 input.
;
;Conversion start & polling for completion
; are included.
;
MOVLW     B'10101111'  ;right justify, Frc,
MOVWF     ADCON2       ; & 12 TAD ACQ time
MOVLW     B'00000000'  ;ADC ref = Vdd,Vss
MOVWF     ADCON1       ;
BSF       TRISA,0      ;Set RA0 to input
BSF       ANSEL,0      ;Set RA0 to analog
MOVLW     B'00000001'  ;AN0, ADC on
MOVWF     ADCON0       ;
BSF       ADCON0,GO    ;Start conversion
ADCPoll:
BTFSC     ADCON0,GO    ;Is conversion done?
BRA       ADCPoll      ;No, test again
; Result is complete - store 2 MSbits in
; RESULTHI and 8 LSbits in RESULTLO
MOVFF     ADRESH,RESULTHI
MOVFF     ADRESL,RESULTLO
```


© 2010-2016 Microchip Technology Inc.

17.3 Register Definitions: ADC Control

Note: Analog pin control is determined by the ANSELx registers (see Register 10-2)

REGISTER 17-1: ADCON0: A/D CONTROL REGISTER 0

U-0	R/W-0	R/W-0	R/W-0	R/W-0	R/W-0	R/W-0	R/W-0
—	CHS<4:0>					GO/$\overline{\text{DONE}}$	ADON
bit 7							bit 0

Legend:			
R = Readable bit	W = Writable bit	U = Unimplemented bit, read as ‘0’	
-n = Value at POR	‘1’ = Bit is set	‘0’ = Bit is cleared	x = Bit is unknown

bit 7 **Unimplemented:** Read as ‘0’

bit 6-2 **CHS<4:0>: Analog Channel Select bits**
00000 = AN0
00001 = AN1
00010 = AN2
00011 = AN3
00100 = AN4
00101 = AN5(1)
00110 = AN6(1)
00111 = AN7(1)
01000 = AN8
01001 = AN9
01010 = AN10
01011 = AN11
01100 = AN12
01101 = AN13
01110 = AN14
01111 = AN15
10000 = AN16
10001 = AN17
10010 = AN18
10011 = AN19
10100 = AN20(1)
10101 = AN21(1)
10110 = AN22(1)
10111 = AN23(1)
11000 = AN24(1)
11001 = AN25(1)
11010 = AN26(1)
11011 = AN27(1)
11100 = Reserved
11101 = CTMU
11110 = DAC
11111 = FVR BUF2 (1.024V/2.048V/2.096V Volt Fixed Voltage Reference)(2)

bit 1 **GO/$\overline{\text{DONE}}$:** A/D Conversion Status bit
1 = A/D conversion cycle in progress. Setting this bit starts an A/D conversion cycle.
This bit is automatically cleared by hardware when the A/D conversion has completed.
0 = A/D conversion completed/not in progress

bit 0 **ADON:** ADC Enable bit
1 = ADC is enabled
0 = ADC is disabled and consumes no operating current

Note 1: Available on PIC18(L)F4XK22 devices only.
2: Allow greater than 15 μs acquisition time when measuring the Fixed Voltage Reference.

REGISTER 17-2: ADCON1: A/D CONTROL REGISTER 1

R/W-0	U-0	U-0	U-0	R/W-0	R/W-0	R/W-0	R/W-0
TRIGSEL	—	—	—	PVCFG<1:0>		NVCFG<1:0>	
bit 7							bit 0

Legend:			
R = Readable bit	W = Writable bit	U = Unimplemented bit, read as ‘0’	
-n = Value at POR	‘1’ = Bit is set	‘0’ = Bit is cleared	x = Bit is unknown

bit 7 **TRIGSEL**: Special Trigger Select bit
1 = Selects the special trigger from CTMU
0 = Selects the special trigger from CCP5

bit 6-4 **Unimplemented:** Read as ‘0’

bit 3-2 **PVCFG<1:0>:** Positive Voltage Reference Configuration bits
00 = A/D V_{REF}+ connected to internal signal, AV_{DD}
01 = A/D V_{REF}+ connected to external pin, V_{REF}+
10 = A/D V_{REF}+ connected to internal signal, FVR BUF2
11 = Reserved (by default, A/D V_{REF}+ connected to internal signal, AV_{DD})

bit 1-0 **NVCFG<1:0>:** Negative Voltage Reference Configuration bits
00 = A/D V_{REF}- connected to internal signal, AV_{SS}
01 = A/D V_{REF}- connected to external pin, V_{REF}-
10 = Reserved (by default, A/D V_{REF}- connected to internal signal, AV_{SS})
11 = Reserved (by default, A/D V_{REF}- connected to internal signal, AV_{SS})

© 2010-2016 Microchip Technology Inc.

REGISTER 17-3: ADCON2: A/D CONTROL REGISTER 2

R/W-0	U-0	R/W-0	R/W-0	R/W-0	R/W-0	R/W-0	R/W-0
ADFM	—	ACQT<2:0>			ADCS<2:0>		
bit 7							bit 0

Legend:			
R = Readable bit	W = Writable bit	U = Unimplemented bit, read as ‘0’	
-n = Value at POR	‘1’ = Bit is set	‘0’ = Bit is cleared	x = Bit is unknown

bit 7 **ADFM:** A/D Conversion Result Format Select bit
1 = Right justified
0 = Left justified

bit 6 **Unimplemented:** Read as ‘0’

bit 5-3 **ACQT<2:0>:** A/D Acquisition time select bits. Acquisition time is the duration that the A/D charge holding capacitor remains connected to A/D channel from the instant the GO/$\overline{\text{DONE}}$ bit is set until conversions begins.
000 = 0(1)
001 = 2 TAD
010 = 4 TAD
011 = 6 TAD
100 = 8 TAD
101 = 12 TAD
110 = 16 TAD
111 = 20 TAD

bit 2-0 **ADCS<2:0>:** A/D Conversion Clock Select bits
000 = FOSC/2
001 = FOSC/8
010 = FOSC/32
011 = FRC(1) (clock derived from a dedicated internal oscillator = 600 kHz nominal)
100 = FOSC/4
101 = FOSC/16
110 = FOSC/64
111 = FRC(1) (clock derived from a dedicated internal oscillator = 600 kHz nominal)

Note 1: When the A/D clock source is selected as FRC then the start of conversion is delayed by one instruction cycle after the GO/$\overline{\text{DONE}}$ bit is set to allow the SLEEP instruction to be executed.

REGISTER 17-4: ADRESH: ADC RESULT REGISTER HIGH (ADRESH) ADFM = 0

R/W-x	R/W-x	R/W-x	R/W-x	R/W-x	R/W-x	R/W-x	R/W-x
ADRES<9:2>							
bit 7							bit 0

Legend:			
R = Readable bit	W = Writable bit	U = Unimplemented bit, read as ‘0’	
-n = Value at POR	‘1’ = Bit is set	‘0’ = Bit is cleared	x = Bit is unknown

bit 7-0 **ADRES<9:2>**: ADC Result Register bits
Upper eight bits of 10-bit conversion result

REGISTER 17-5: ADRESL: ADC RESULT REGISTER LOW (ADRESL) ADFM = 0

R/W-x	R/W-x	R/W-x	R/W-x	R/W-x	R/W-x	R/W-x	R/W-x
ADRES<1:0>		—	—	—	—	—	—
bit 7							bit 0

Legend:			
R = Readable bit	W = Writable bit	U = Unimplemented bit, read as ‘0’	
-n = Value at POR	‘1’ = Bit is set	‘0’ = Bit is cleared	x = Bit is unknown

bit 7-6 **ADRES<1:0>**: ADC Result Register bits
Lower two bits of 10-bit conversion result

bit 5-0 **Reserved**: Do not use.

REGISTER 17-6: ADRESH: ADC RESULT REGISTER HIGH (ADRESH) ADFM = 1

R/W-x	R/W-x	R/W-x	R/W-x	R/W-x	R/W-x	R/W-x	R/W-x
—	—	—	—	—	—	ADRES<9:8>	
bit 7							bit 0

Legend:			
R = Readable bit	W = Writable bit	U = Unimplemented bit, read as ‘0’	
-n = Value at POR	‘1’ = Bit is set	‘0’ = Bit is cleared	x = Bit is unknown

bit 7-2 **Reserved**: Do not use.

bit 1-0 **ADRES<9:8>**: ADC Result Register bits
Upper two bits of 10-bit conversion result

REGISTER 17-7: ADRESL: ADC RESULT REGISTER LOW (ADRESL) ADFM = 1

R/W-x	R/W-x	R/W-x	R/W-x	R/W-x	R/W-x	R/W-x	R/W-x
ADRES<7:0>							
bit 7							bit 0

Legend:			
R = Readable bit	W = Writable bit	U = Unimplemented bit, read as ‘0’	
-n = Value at POR	‘1’ = Bit is set	‘0’ = Bit is cleared	x = Bit is unknown

bit 7-0 **ADRES<7:0>**: ADC Result Register bits
Lower eight bits of 10-bit conversion result

© 2010-2016 Microchip Technology Inc.

17.4 A/D Acquisition Requirements

For the ADC to meet its specified accuracy, the charge holding capacitor (CHOLD) must be allowed to fully charge to the input channel voltage level. The Analog Input model is shown in Figure 17-5. The source impedance (RS) and the internal sampling switch (RSS) impedance directly affect the time required to charge the capacitor CHOLD. The sampling switch (RSS) impedance varies over the device voltage (VDD), see Figure 17-5. The maximum recommended impedance for analog sources is 3 kΩ. As the source impedance is decreased, the acquisition time may be decreased. After the analog input channel is selected (or changed), an A/D acquisition must be done before the conversion can be started. To calculate the minimum acquisition time, Equation 17-1 may be used. This equation assumes that 1/2 LSb error is used (1024 steps for the ADC). The 1/2 LSb error is the maximum error allowed for the ADC to meet its specified resolution.

EQUATION 17-1: ACQUISITION TIME EXAMPLE

Assumptions: $Temperature = 50°C$ *and external impedance of* $10k\Omega$ $3.0V$ V_{DD}

$$\begin{aligned} T_{ACQ} &= \text{Amplifier Settling Time} + \text{Hold Capacitor Charging Time} + \text{Temperature Coefficient} \\ &= T_{AMP} + T_C + T_{COFF} \\ &= 5\mu s + T_C + [(Temperature - 25°C)(0.05\mu s/°C)] \end{aligned}$$

The value for T_C *can be approximated with the following equations:*

$$V_{APPLIED}\left(1 - \frac{1}{2047}\right) = V_{CHOLD}$$ *;[1]* V_{CHOLD} *charged to within 1/2 lsb*

$$V_{APPLIED}\left(1 - e^{\frac{-T_C}{RC}}\right) = V_{CHOLD}$$ *;[2]* V_{CHOLD} *charge response to* $V_{APPLIED}$

$$V_{APPLIED}\left(1 - e^{\frac{-T_C}{RC}}\right) = V_{APPLIED}\left(1 - \frac{1}{2047}\right)$$ *;combining [1] and [2]*

Solving for T_C*:*

$$\begin{aligned} T_C &= -C_{HOLD}(R_{IC} + R_{SS} + R_S)\ ln(1/2047) \\ &= -13.5pF(1k\Omega + 700\Omega + 10k\Omega)\ ln(0.0004885) \\ &= 1.20\mu s \end{aligned}$$

Therefore:

$$\begin{aligned} T_{ACQ} &= 5\mu s + 1.20\mu s + [(50°C - 25°C)(0.05\mu s/°C)] \\ &= 7.45\mu s \end{aligned}$$

Note 1: The reference voltage (VREF) has no effect on the equation, since it cancels itself out.

2: The charge holding capacitor (CHOLD) is discharged after each conversion.

3: The maximum recommended impedance for analog sources is 10 kΩ. This is required to meet the pin leakage specification.

FIGURE 17-5: ANALOG INPUT MODEL

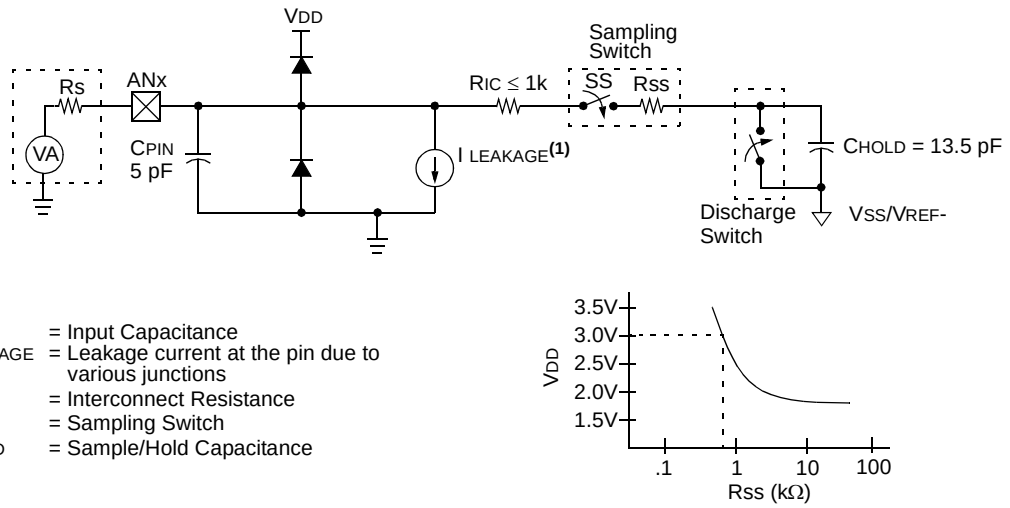

Legend: CPIN = Input Capacitance
I LEAKAGE = Leakage current at the pin due to various junctions
RIC = Interconnect Resistance
SS = Sampling Switch
CHOLD = Sample/Hold Capacitance

Note 1: See **Section 27.0 "Electrical Specifications"**.

FIGURE 17-6: ADC TRANSFER FUNCTION

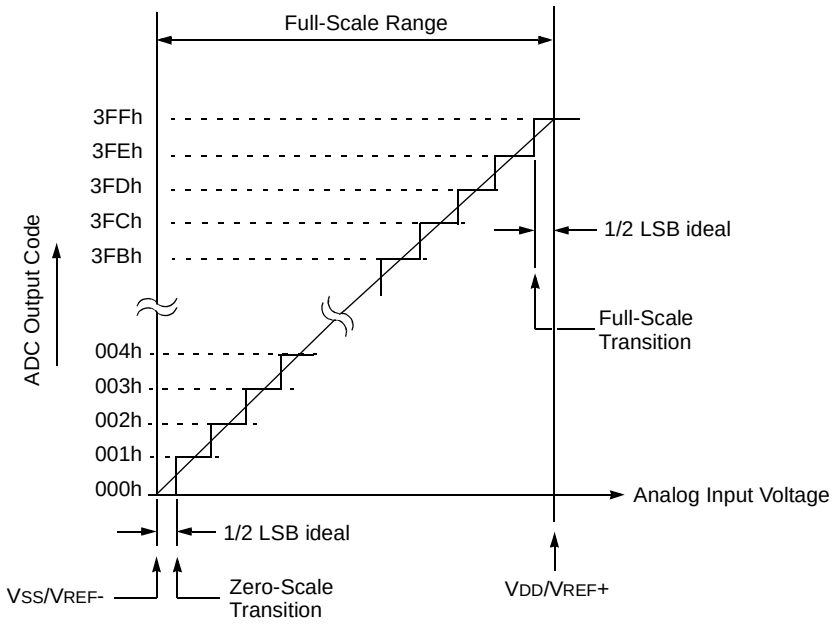

© 2010-2016 Microchip Technology Inc.

TABLE 17-2: REGISTERS ASSOCIATED WITH A/D OPERATION

Name	Bit 7	Bit 6	Bit 5	Bit 4	Bit 3	Bit 2	Bit 1	Bit 0	Register on Page
ADCON0	—	CHS<4:0>					GO/$\overline{\text{DONE}}$	ADON	295
ADCON1	TRIGSEL	—	—	—	PVCFG<1:0>		NVCFG<1:0>		296
ADCON2	ADFM	—	ACQT<2:0>			ADCS<2:0>			297
ADRESH	A/D Result, High Byte								298
ADRESL	A/D Result, Low Byte								298
ANSELA	—	—	ANSA5	—	ANSA3	ANSA2	ANSA1	ANSA0	149
ANSELB	—	—	ANSB5	ANSB4	ANSB3	ANSB2	ANSB1	ANSB0	150
ANSELC	ANSC7	ANSC6	ANSC5	ANSC4	ANSC3	ANSC2	—	—	150
ANSELD(1)	ANSD7	ANSD6	ANSD5	ANSD4	ANSD3	ANSD2	ANSD1	ANSD0	150
ANSELE(1)	—	—	—	—	—	ANSE2	ANSE1	ANSE0	151
CCP5CON	—	—	DC5B<1:0>		CCP5M<3:0>				198
CTMUCONH	CTMUEN	—	CTMUSIDL	TGEN	EDGEN	EDGSEQEN	IDISSEN	CTTRIG	323
INTCON	GIE/GIEH	PEIE/GIEL	TMR0IE	INT0IE	RBIE	TMR0IF	INT0IF	RBIF	109
IPR1	—	ADIP	RC1IP	TX1IP	SSP1IP	CCP1IP	TMR2IP	TMR1IP	121
IPR3	SSP2IP	BCL2IP	RC2IP	TX2IP	CTMUIP	TMR5GIP	TMR3GIP	TMR1GIP	123
IPR4	—	—	—	—	—	CCP5IP	CCP4IP	CCP3IP	124
PIE1	—	ADIE	RC1IE	TX1IE	SSP1IE	CCP1IE	TMR2IE	TMR1IE	117
PIE3	SSP2IE	BCL2IE	RC2IE	TX2IE	CTMUIE	TMR5GIE	TMR3GIE	TMR1GIE	119
PIE4	—	—	—	—	—	CCP5IE	CCP4IE	CCP3IE	120
PIR1	—	ADIF	RC1IF	TX1IF	SSP1IF	CCP1IF	TMR2IF	TMR1IF	112
PIR3	SSP2IF	BCL2IF	RC2IF	TX2IF	CTMUIF	TMR5GIF	TMR3GIF	TMR1GIF	114
PIR4	—	—	—	—	—	CCP5IF	CCP4IF	CCP3IF	115
PMD1	MSSP2MD	MSSP1MD	—	CCP5MD	CCP4MD	CCP3MD	CCP2MD	CCP1MD	53
PMD2	—	—	—	—	CTMUMD	CMP2MD	CMP1MD	ADCMD	54
TRISA	TRISA7	TRISA6	TRISA5	TRISA4	TRISA3	TRISA2	TRISA1	TRISA0	151
TRISB	TRISB7	TRISB6	TRISB5	TRISB4	TRISB3	TRISB2	TRISB1	TRISB0	151
TRISC	TRISC7	TRISC6	TRISC5	TRISC4	TRISC3	TRISC2	TRISC1	TRISC0	151
TRISD(1)	TRISD7	TRISD6	TRISD5	TRISD4	TRISD3	TRISD2	TRISD1	TRISD0	151
TRISE	WPUE3	—	—	—	—	TRISE2(1)	TRISE1(1)	TRISE0(1)	151

Legend: — = unimplemented locations, read as '0'. Shaded bits are not used by this module.

Note 1: Available on PIC18(L)F4XK22 devices.

TABLE 17-3: CONFIGURATION REGISTERS ASSOCIATED WITH THE ADC MODULE

Name	Bit 7	Bit 6	Bit 5	Bit 4	Bit 3	Bit 2	Bit 1	Bit 0	Register on Page
CONFIG3H	MCLRE	—	P2BMX	T3CMX	HFOFST	CCP3MX	PBADEN	CCP2MX	348

Legend: — = unimplemented locations, read as '0'. Shaded bits are not used by the ADC module.

18.0 COMPARATOR MODULE

Comparators are used to interface analog circuits to a digital circuit by comparing two analog voltages and providing a digital indication of their relative magnitudes. The comparators are very useful mixed signal building blocks because they provide analog functionality independent of the program execution. The analog comparator module includes the following features:

- Independent comparator control
- Programmable input selection
- Comparator output is available internally/externally
- Programmable output polarity
- Interrupt-on-change
- Wake-up from Sleep
- Programmable Speed/Power optimization
- PWM shutdown
- Programmable and fixed voltage reference
- Selectable Hysteresis

18.1 Comparator Overview

A single comparator is shown in Figure 18-1 along with the relationship between the analog input levels and the digital output. When the analog voltage at VIN+ is less than the analog voltage at VIN-, the output of the comparator is a digital low level. When the analog voltage at VIN+ is greater than the analog voltage at VIN-, the output of the comparator is a digital high level.

FIGURE 18-1: SINGLE COMPARATOR

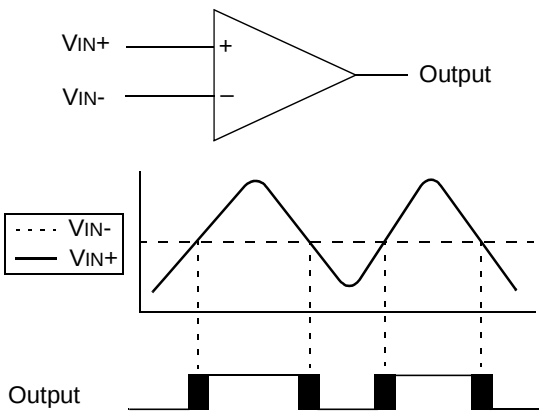

Note: The black areas of the output of the comparator represents the uncertainty due to input offsets and response time.

© 2010-2016 Microchip Technology Inc.

FIGURE 18-2: COMPARATOR C1/C2 SIMPLIFIED BLOCK DIAGRAM

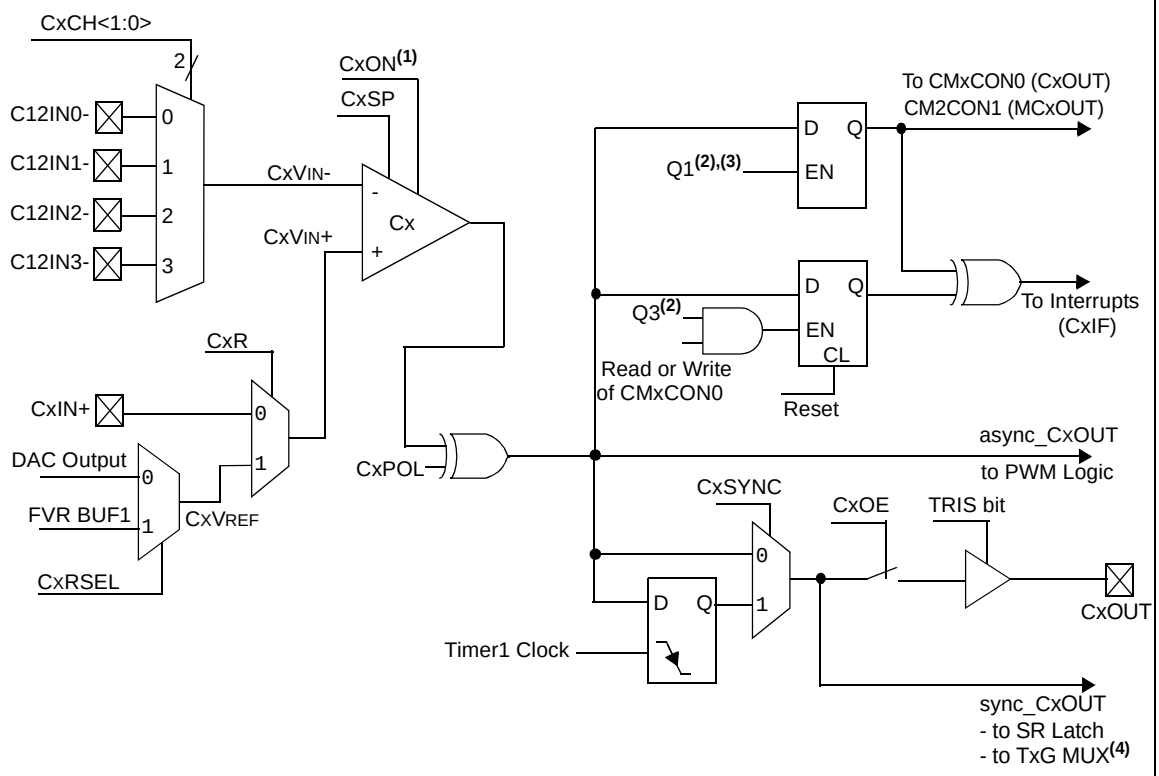

Note 1: When C1ON = 0, the C1 comparator will produce a '0' output to the XOR Gate.
2: Q1 and Q3 are phases of the four-phase system clock (FOSC).
3: Q1 is held high during Sleep mode.
4: Synchronized comparator output should not be used to gate Timer1 in conjunction with synchronized T1CKI.

18.2 Comparator Control

Each comparator has a separate control and Configuration register: CM1CON0 for Comparator C1 and CM2CON0 for Comparator C2. In addition, Comparator C2 has a second control register, CM2CON1, for controlling the interaction with Timer1 and simultaneous reading of both comparator outputs.

The CM1CON0 and CM2CON0 registers (see Register 18-1) contain the control and status bits for the following:

- Enable
- Input selection
- Reference selection
- Output selection
- Output polarity
- Speed selection

18.2.1 COMPARATOR ENABLE

Setting the CxON bit of the CMxCON0 register enables the comparator for operation. Clearing the CxON bit disables the comparator resulting in minimum current consumption.

18.2.2 COMPARATOR INPUT SELECTION

The CxCH<1:0> bits of the CMxCON0 register direct one of four analog input pins to the comparator inverting input.

> **Note:** To use CxIN+ and C12INx- pins as analog inputs, the appropriate bits must be set in the ANSEL register and the corresponding TRIS bits must also be set to disable the output drivers.

18.2.3 COMPARATOR REFERENCE SELECTION

Setting the CxR bit of the CMxCON0 register directs an internal voltage reference or an analog input pin to the non-inverting input of the comparator. See **Section 21.0 "Fixed Voltage Reference (FVR)"** for more information on the Internal Voltage Reference module.

18.2.4 COMPARATOR OUTPUT SELECTION

The output of the comparator can be monitored by reading either the CxOUT bit of the CMxCON0 register or the MCxOUT bit of the CM2CON1 register. In order to make the output available for an external connection, the following conditions must be true:

- CxOE bit of the CMxCON0 register must be set
- Corresponding TRIS bit must be cleared
- CxON bit of the CMxCON0 register must be set

> **Note 1:** The CxOE bit overrides the PORT data latch. Setting the CxON has no impact on the port override.
>
> **2:** The internal output of the comparator is latched with each instruction cycle. Unless otherwise specified, external outputs are not latched.

18.2.5 COMPARATOR OUTPUT POLARITY

Inverting the output of the comparator is functionally equivalent to swapping the comparator inputs. The polarity of the comparator output can be inverted by setting the CxPOL bit of the CMxCON0 register. Clearing the CxPOL bit results in a non-inverted output.

Table 18-1 shows the output state versus input conditions, including polarity control.

TABLE 18-1: COMPARATOR OUTPUT STATE VS. INPUT CONDITIONS

Input Condition	CxPOL	CxOUT
CxVIN- > CxVIN+	0	0
CxVIN- < CxVIN+	0	1
CxVIN- > CxVIN+	1	1
CxVIN- < CxVIN+	1	0

18.2.6 COMPARATOR SPEED SELECTION

The trade-off between speed or power can be optimized during program execution with the CxSP control bit. The default state for this bit is '1' which selects the normal speed mode. Device power consumption can be optimized at the cost of slower comparator propagation delay by clearing the CxSP bit to '0'.

18.3 Comparator Response Time

The comparator output is indeterminate for a period of time after the change of an input source or the selection of a new reference voltage. This period is referred to as the response time. The response time of the comparator differs from the settling time of the voltage reference. Therefore, both of these times must be considered when determining the total response time to a comparator input change. See the Comparator and Voltage Reference Specifications in **Section 27.0 "Electrical Specifications"** for more details.

© 2010-2016 Microchip Technology Inc.

18.4 Comparator Interrupt Operation

The comparator interrupt flag will be set whenever there is a change in the output value of the comparator. Changes are recognized by means of a mismatch circuit which consists of two latches and an exclusive-or gate (see Figure 18-2). The first latch is updated with the comparator output value, when the CMxCON0 register is read or written. The value is latched on the third cycle of the system clock, also known as Q3. This first latch retains the comparator value until another read or write of the CMxCON0 register occurs or a Reset takes place. The second latch is updated with the comparator output value on every first cycle of the system clock, also known as Q1. When the output value of the comparator changes, the second latch is updated and the output values of both latches no longer match one another, resulting in a mismatch condition. The latch outputs are fed directly into the inputs of an exclusive-or gate. This mismatch condition is detected by the exclusive-or gate and sent to the interrupt circuitry. The mismatch condition will persist until the first latch value is updated by performing a read of the CMxCON0 register or the comparator output returns to the previous state.

> **Note 1:** A write operation to the CMxCON0 register will also clear the mismatch condition because all writes include a read operation at the beginning of the write cycle.
>
> **2:** Comparator interrupts will operate correctly regardless of the state of CxOE.

When the mismatch condition occurs, the comparator interrupt flag is set. The interrupt flag is triggered by the edge of the changing value coming from the exclusive-or gate. This means that the interrupt flag can be reset once it is triggered without the additional step of reading or writing the CMxCON0 register to clear the mismatch latches. When the mismatch registers are cleared, an interrupt will occur upon the comparator's return to the previous state, otherwise no interrupt will be generated.

Software will need to maintain information about the status of the comparator output, as read from the CMxCON0 register, or CM2CON1 register, to determine the actual change that has occurred. See Figures 18-3 and 18-4.

The CxIF bit of the PIR2 register is the comparator interrupt flag. This bit must be reset by software by clearing it to '0'. Since it is also possible to write a '1' to this register, an interrupt can be generated.

In mid-range Compatibility mode the CxIE bit of the PIE2 register and the PEIE/GIEL and GIE/GIEH bits of the INTCON register must all be set to enable comparator interrupts. If any of these bits are cleared, the interrupt is not enabled, although the CxIF bit of the PIR2 register will still be set if an interrupt condition occurs.

18.4.1 PRESETTING THE MISMATCH LATCHES

The comparator mismatch latches can be preset to the desired state before the comparators are enabled. When the comparator is off the CxPOL bit controls the CxOUT level. Set the CxPOL bit to the desired CxOUT non-interrupt level while the CxON bit is cleared. Then, configure the desired CxPOL level in the same instruction that the CxON bit is set. Since all register writes are performed as a read-modify-write, the mismatch latches will be cleared during the instruction read phase and the actual configuration of the CxON and CxPOL bits will be occur in the final write phase.

FIGURE 18-3: COMPARATOR INTERRUPT TIMING W/O CMxCON0 READ

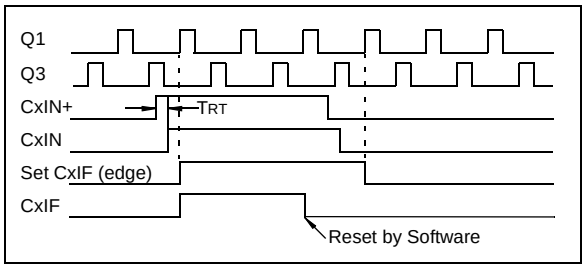

FIGURE 18-4: COMPARATOR INTERRUPT TIMING WITH CMxCON0 READ

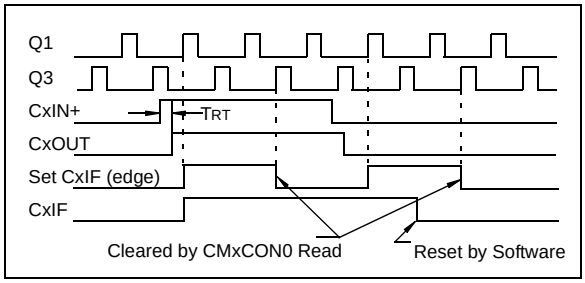

> **Note 1:** If a change in the CMxCON0 register (CxOUT) should occur when a read operation is being executed (start of the Q2 cycle), then the CxIF interrupt flag of the PIR2 register may not get set.
>
> **2:** When either comparator is first enabled, bias circuitry in the comparator module may cause an invalid output from the comparator until the bias circuitry is stable. Allow about 1 µs for bias settling then clear the mismatch condition and interrupt flags before enabling comparator interrupts.

18.5 Operation During Sleep

The comparator, if enabled before entering Sleep mode, remains active during Sleep. The additional current consumed by the comparator is shown separately in **Section 27.0 "Electrical Specifications"**. If the comparator is not used to wake the device, power consumption can be minimized while in Sleep mode by turning off the comparator. Each comparator is turned off by clearing the CxON bit of the CMxCON0 register.

A change to the comparator output can wake-up the device from Sleep. To enable the comparator to wake the device from Sleep, the CxIE bit of the PIE2 register and the PEIE/GIEL bit of the INTCON register must be set. The instruction following the SLEEP instruction always executes following a wake from Sleep. If the GIE/GIEH bit of the INTCON register is also set, the device will then execute the Interrupt Service Routine.

18.6 Effects of a Reset

A device Reset forces the CMxCON0 and CM2CON1 registers to their Reset states. This forces both comparators and the voltage references to their Off states.Comparator Control Registers.

18.7 Analog Input Connection Considerations

A simplified circuit for an analog input is shown in Figure 18-5. Since the analog input pins share their connection with a digital input, they have reverse biased ESD protection diodes to VDD and VSS. The analog input, therefore, must be between VSS and VDD. If the input voltage deviates from this range by more than 0.6V in either direction, one of the diodes is forward biased and a latch-up may occur.

A maximum source impedance of 10 kΩ is recommended for the analog sources. Also, any external component connected to an analog input pin, such as a capacitor or a Zener diode, should have very little leakage current to minimize inaccuracies introduced.

> **Note 1:** When reading a PORT register, all pins configured as analog inputs will read as a '0'. Pins configured as digital inputs will convert as an analog input, according to the input specification.
>
> **2:** Analog levels on any pin defined as a digital input, may cause the input buffer to consume more current than is specified.

FIGURE 18-5: ANALOG INPUT MODEL

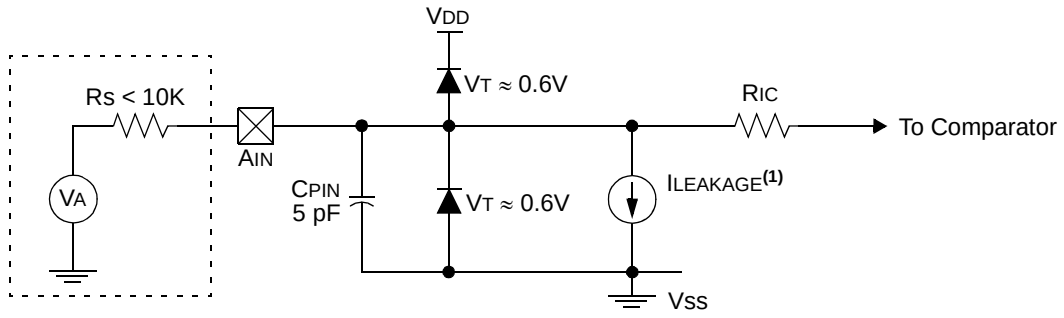

Legend:
CPIN = Input Capacitance
ILEAKAGE = Leakage Current at the pin due to various junctions
RIC = Interconnect Resistance
RS = Source Impedance
VA = Analog Voltage
VT = Threshold Voltage

Note 1: See **Section 27.0 "Electrical Specifications"**.

© 2010-2016 Microchip Technology Inc.

18.8 Additional Comparator Features

There are four additional comparator features:

- Simultaneous read of comparator outputs
- Internal reference selection
- Hysteresis selection
- Output Synchronization

18.8.1 SIMULTANEOUS COMPARATOR OUTPUT READ

The MC1OUT and MC2OUT bits of the CM2CON1 register are mirror copies of both comparator outputs. The ability to read both outputs simultaneously from a single register eliminates the timing skew of reading separate registers.

Note 1:	Obtaining the status of C1OUT or C2OUT by reading CM2CON1 does not affect the comparator interrupt mismatch registers.

18.8.2 INTERNAL REFERENCE SELECTION

There are two internal voltage references available to the non-inverting input of each comparator. One of these is the Fixed Voltage Reference (FVR) and the other is the variable Digital-to-Analog Converter (DAC). The CxRSEL bit of the CM2CON1 register determines which of these references is routed to the Comparator Voltage reference output (CxVREF). Further routing to the comparator is accomplished by the CxR bit of the CMxCON0 register. See **Section 21.0 "Fixed Voltage Reference (FVR)"** and Figure 18-2 for more detail.

18.8.3 COMPARATOR HYSTERESIS

Each Comparator has a selectable hysteresis feature. The hysteresis can be enabled by setting the CxHYS bit of the CM2CON1 register. See **Section 27.0 "Electrical Specifications"** for more details.

18.8.4 SYNCHRONIZING COMPARATOR OUTPUT TO TIMER1

The Comparator Cx output can be synchronized with Timer1 by setting the CxSYNC bit of the CM2CON1 register. When enabled, the Cx output is latched on the falling edge of the Timer1 source clock. To prevent a race condition when gating Timer1 clock with the comparator output, Timer1 increments on the rising edge of its clock source, and the falling edge latches the comparator output. See the Comparator Block Diagram (Figure 18-2) and the Timer1 Block Diagram (Figure 12-1) for more information.

Note 1:	The comparator synchronized output should not be used to gate the external Timer1 clock when the Timer1 synchronizer is enabled.
2:	The Timer1 prescale should be set to 1:1 when synchronizing the comparator output as unexpected results may occur with other prescale values.

18.9 Register Definitions: Comparator Control

REGISTER 18-1: CMxCON0: COMPARATOR x CONTROL REGISTER

R/W-0	R-0	R/W-0	R/W-0	R/W-1	R/W-0	R/W-0	R/W-0
CxON	CxOUT	CxOE	CxPOL	CxSP	CxR	CxCH<1:0>	
bit 7							bit 0

Legend:			
R = Readable bit	W = Writable bit	U = Unimplemented bit, read as ‘0’	
-n = Value at POR	‘1’ = Bit is set	‘0’ = Bit is cleared	x = Bit is unknown

bit 7 **CxON:** Comparator Cx Enable bit
1 = Comparator Cx is enabled
0 = Comparator Cx is disabled

bit 6 **CxOUT:** Comparator Cx Output bit
If CxPOL = 1 (inverted polarity):
CxOUT = 0 when CxVIN+ > CxVIN-
CxOUT = 1 when CxVIN+ < CxVIN-
If CxPOL = 0 (non-inverted polarity):
CxOUT = 1 when CxVIN+ > CxVIN-
CxOUT = 0 when CxVIN+ < CxVIN-

bit 5 **CxOE:** Comparator Cx Output Enable bit
1 = CxOUT is present on the CxOUT pin(1)
0 = CxOUT is internal only

bit 4 **CxPOL:** Comparator Cx Output Polarity Select bit
1 = CxOUT logic is inverted
0 = CxOUT logic is not inverted

bit 3 **CxSP:** Comparator Cx Speed/Power Select bit
1 = Cx operates in Normal-Power, Higher Speed mode
0 = Cx operates in Low-Power, Low-Speed mode

bit 2 **CxR:** Comparator Cx Reference Select bit (non-inverting input)
1 = CxVIN+ connects to CxVREF output
0 = CxVIN+ connects to C12IN+ pin

bit 1-0 **CxCH<1:0>:** Comparator Cx Channel Select bit
00 = C12IN0- pin of Cx connects to CxVIN-
01 = C12IN1- pin of Cx connects to CxVIN-
10 = C12IN2- pin of Cx connects to CxVIN-
11 = C12IN3- pin of Cx connects to CxVIN-

Note 1: Comparator output requires the following three conditions: CxOE = 1, CxON = 1 and corresponding port TRIS bit = 0.

© 2010-2016 Microchip Technology Inc.

REGISTER 18-2: CM2CON1: COMPARATOR 1 AND 2 CONTROL REGISTER

R-0	R-0	R/W-0	R/W-0	R/W-0	R/W-0	R/W-0	R/W-0
MC1OUT	MC2OUT	C1RSEL	C2RSEL	C1HYS	C2HYS	C1SYNC	C2SYNC
bit 7							bit 0

Legend:			
R = Readable bit	W = Writable bit	U = Unimplemented bit, read as ‘0’	
-n = Value at POR	‘1’ = Bit is set	‘0’ = Bit is cleared	x = Bit is unknown

bit 7 **MC1OUT:** Mirror Copy of C1OUT bit

bit 6 **MC2OUT:** Mirror Copy of C2OUT bit

bit 5 **C1RSEL:** Comparator C1 Reference Select bit
1 = FVR BUF1 routed to C1VREF input
0 = DAC routed to C1VREF input

bit 4 **C2RSEL:** Comparator C2 Reference Select bit
1 = FVR BUF1 routed to C2VREF input
0 = DAC routed to C2VREF input

bit 3 **C1HYS:** Comparator C1 Hysteresis Enable bit
1 = Comparator C1 hysteresis enabled
0 = Comparator C1 hysteresis disabled

bit 2 **C2HYS:** Comparator C2 Hysteresis Enable bit
1 = Comparator C2 hysteresis enabled
0 = Comparator C2 hysteresis disabled

bit 1 **C1SYNC:** C1 Output Synchronous Mode bit
1 = C1 output is synchronized to rising edge of TMR1 clock (T1CLK)
0 = C1 output is asynchronous

bit 0 **C2SYNC:** C2 Output Synchronous Mode bit
1 = C2 output is synchronized to rising edge of TMR1 clock (T1CLK)
0 = C2 output is asynchronous

TABLE 18-2: REGISTERS ASSOCIATED WITH COMPARATOR MODULE

Name	Bit 7	Bit 6	Bit 5	Bit 4	Bit 3	Bit 2	Bit 1	Bit 0	Register on Page
ANSELA	—	—	ANSA5	—	ANSA3	ANSA2	ANSA1	ANSA0	149
ANSELB	—	—	ANSB5	ANSB4	ANSB3	ANSB2	ANSB1	ANSB0	150
CM2CON1	MC1OUT	MC2OUT	C1RSEL	C2RSEL	C1HYS	C2HYS	C1SYNC	C2SYNC	309
CM1CON0	C1ON	C1OUT	C1OE	C1POL	C1SP	C1R	C1CH<1:0>		308
CM2CON0	C2ON	C2OUT	C2OE	C2POL	C2SP	C2R	C2CH<1:0>		308
VREFCON1	DACEN	DACLPS	DACOE	—	DACPSS<1:0>		—	DACNSS	335
VREFCON2	—	—	—	DACR<4:0>					336
VREFCON0	FVREN	FVRST	FVRS<1:0>		—	—	—	—	332
INTCON	GIE/GIEH	PEIE/GIEL	TMR0IE	INT0IE	RBIE	TMR0IF	INT0IF	RBIF	109
IPR2	OSCFIP	C1IP	C2IP	EEIP	BCL1IP	HLVDIP	TMR3IP	CCP2IP	122
PIE2	OSCFIE	C1IE	C2IE	EEIE	BCL1IE	HLVDIE	TMR3IE	CCP2IE	118
PIR2	OSCFIF	C1IF	C2IF	EEIF	BCL1IF	HLVDIF	TMR3IF	CCP2IF	113
PMD2	—	—	—	—	CTMUMD	CMP2MD	CMP1MD	ADCMD	54
TRISA	TRISA7	TRISA6	TRISA5	TRISA4	TRISA3	TRISA2	TRISA1	TRISA0	151
TRISB	TRISB7	TRISB6	TRISB5	TRISB4	TRISB3	TRISB2	TRISB1	TRISB0	151

Legend: — = unimplemented locations, read as '0'. Shaded bits are not used by the comparator module.

© 2010-2016 Microchip Technology Inc.

19.0 CHARGE TIME MEASUREMENT UNIT (CTMU)

The Charge Time Measurement Unit (CTMU) is a flexible analog module that provides accurate differential time measurement between pulse sources, as well as asynchronous pulse generation. By working with other on-chip analog modules, the CTMU can be used to precisely measure time, measure capacitance, measure relative changes in capacitance or generate output pulses with a specific time delay. The CTMU is ideal for interfacing with capacitive-based sensors.

The module includes the following key features:

- Up to 28[(1)] channels available for capacitive or time measurement input
- On-chip precision current source
- Four-edge input trigger sources
- Polarity control for each edge source
- Control of edge sequence
- Control of response to edges
- High precision time measurement
- Time delay of external or internal signal asynchronous to system clock
- Accurate current source suitable for capacitive measurement

The CTMU works in conjunction with the A/D Converter to provide up to 28[(1)] channels for time or charge measurement, depending on the specific device and the number of A/D channels available. When configured for time delay, the CTMU is connected to the C12IN1- input of Comparator 2. The level-sensitive input edge sources can be selected from four sources: two external input pins (CTED1/CTED2) or the ECCP1/(E)CCP2 Special Event Triggers.

Figure 19-1 provides a block diagram of the CTMU.

Note 1: PIC18(L)F2XK22 devices have up to 17 channels available.

FIGURE 19-1: CTMU BLOCK DIAGRAM

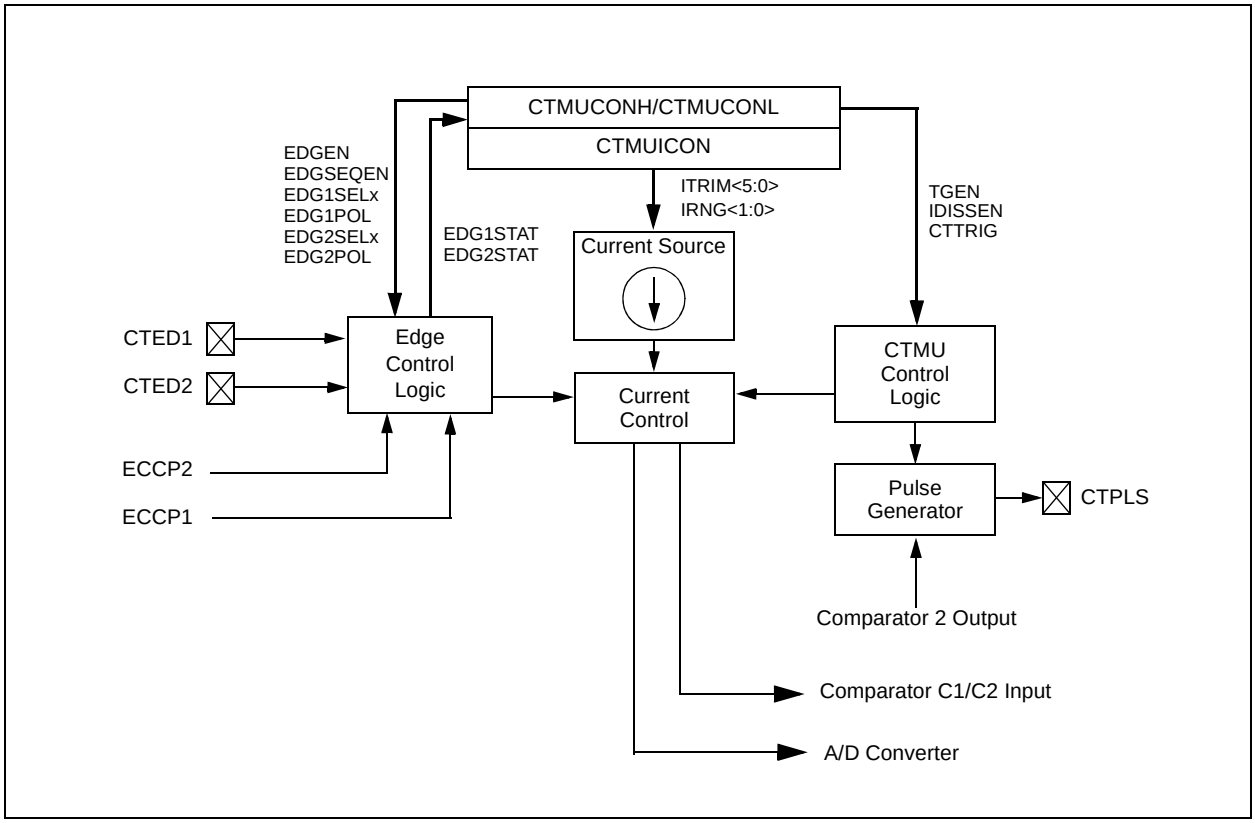

19.1 CTMU Operation

The CTMU works by using a fixed current source to charge a circuit. The type of circuit depends on the type of measurement being made. In the case of charge measurement, the current is fixed, and the amount of time the current is applied to the circuit is fixed. The amount of voltage read by the A/D is then a measurement of the capacitance of the circuit. In the case of time measurement, the current, as well as the capacitance of the circuit, is fixed. In this case, the voltage read by the A/D is then representative of the amount of time elapsed from the time the current source starts and stops charging the circuit.

If the CTMU is being used as a time delay, both capacitance and current source are fixed, as well as the voltage supplied to the comparator circuit. The delay of a signal is determined by the amount of time it takes the voltage to charge to the comparator threshold voltage.

19.1.1 THEORY OF OPERATION

The operation of the CTMU is based on the equation for charge:

$$I = C \cdot \frac{dV}{dT}$$

More simply, the amount of charge measured in coulombs in a circuit is defined as current in amperes (I) multiplied by the amount of time in seconds that the current flows (t). Charge is also defined as the capacitance in farads (C) multiplied by the voltage of the circuit (V). It follows that:

$$I \cdot t = C \cdot V.$$

The CTMU module provides a constant, known current source. The A/D Converter is used to measure (V) in the equation, leaving two unknowns: capacitance (C) and time (t). The above equation can be used to calculate capacitance or time, by either the relationship using the known fixed capacitance of the circuit:

$$t = (C \cdot V)/I$$

or by:

$$C = (I \cdot t)/V$$

using a fixed time that the current source is applied to the circuit.

19.1.2 CURRENT SOURCE

At the heart of the CTMU is a precision current source, designed to provide a constant reference for measurements. The level of current is user-selectable across three ranges, with the ability to trim the output. The current range is selected by the IRNG<1:0> bits (CTMUICON<1:0>), with a value of ‘00’ representing the lowest range.

Current trim is provided by the ITRIM<5:0> bits (CTMUICON<7:2>). Note that half of the range adjusts the current source positively and the other half reduces the current source. A value of ‘000000’ is the neutral position (no change). A value of ‘100000’ is the maximum negative adjustment, and ‘011111’ is the maximum positive adjustment.

19.1.3 EDGE SELECTION AND CONTROL

CTMU measurements are controlled by edge events occurring on the module’s two input channels. Each channel, referred to as Edge 1 and Edge 2, can be configured to receive input pulses from one of the edge input pins (CTED1 and CTED2) or ECCPx Special Event Triggers. The input channels are level-sensitive, responding to the instantaneous level on the channel rather than a transition between levels. The inputs are selected using the EDG1SEL and EDG2SEL bit pairs (CTMUCONL<3:2 and 6:5>).

In addition to source, each channel can be configured for event polarity using the EDGE2POL and EDGE1POL bits (CTMUCONL<7,4>). The input channels can also be filtered for an edge event sequence (Edge 1 occurring before Edge 2) by setting the EDGSEQEN bit (CTMUCONH<2>).

19.1.4 EDGE STATUS

The CTMUCONL register also contains two Status bits: EDG2STAT and EDG1STAT (CTMUCONL<1:0>). Their primary function is to show if an edge response has occurred on the corresponding channel. The CTMU automatically sets a particular bit when an edge response is detected on its channel. The level-sensitive nature of the input channels also means that the Status bits become set immediately if the channel’s configuration is changed and is the same as the channel’s current state.

© 2010-2016 Microchip Technology Inc.

The module uses the edge Status bits to control the current source output to external analog modules (such as the A/D Converter). Current is only supplied to external modules when only one (but not both) of the Status bits is set, and shuts current off when both bits are either set or cleared. This allows the CTMU to measure current only during the interval between edges. After both Status bits are set, it is necessary to clear them before another measurement is taken. Both bits should be cleared simultaneously, if possible, to avoid re-enabling the CTMU current source.

In addition to being set by the CTMU hardware, the edge Status bits can also be set by software. This is also the user's application to manually enable or disable the current source. Setting either one (but not both) of the bits enables the current source. Setting or clearing both bits at once disables the source.

19.1.5 INTERRUPTS

The CTMU sets its interrupt flag (PIR3<2>) whenever the current source is enabled, then disabled. An interrupt is generated only if the corresponding interrupt enable bit (PIE3<2>) is also set. If edge sequencing is not enabled (i.e., Edge 1 must occur before Edge 2), it is necessary to monitor the edge Status bits and determine which edge occurred last and caused the interrupt.

19.2 CTMU Module Initialization

The following sequence is a general guideline used to initialize the CTMU module:

1. Select the current source range using the IRNG bits (CTMUICON<1:0>).
2. Adjust the current source trim using the ITRIM bits (CTMUICON<7:2>).
3. Configure the edge input sources for Edge 1 and Edge 2 by setting the EDG1SEL and EDG2SEL bits (CTMUCONL<3:2 and 6:5>).
4. Configure the input polarities for the edge inputs using the EDG1POL and EDG2POL bits (CTMUCONL<4,7>). The default configuration is for negative edge polarity (high-to-low transitions).
5. Enable edge sequencing using the EDGSEQEN bit (CTMUCONH<2>). By default, edge sequencing is disabled.
6. Select the operating mode (Measurement or Time Delay) with the TGEN bit. The default mode is Time/Capacitance Measurement.
7. Discharge the connected circuit by setting the IDISSEN bit (CTMUCONH<1>); after waiting a sufficient time for the circuit to discharge, clear IDISSEN.
8. Disable the module by clearing the CTMUEN bit (CTMUCONH<7>).
9. Enable the module by setting the CTMUEN bit.
10. Clear the Edge Status bits: EDG2STAT and EDG1STAT (CTMUCONL<1:0>).
11. Enable both edge inputs by setting the EDGEN bit (CTMUCONH<3>).

Depending on the type of measurement or pulse generation being performed, one or more additional modules may also need to be initialized and configured with the CTMU module:

- Edge Source Generation: In addition to the external edge input pins, both Timer1 and the Output Compare/PWM1 module can be used as edge sources for the CTMU.
- Capacitance or Time Measurement: The CTMU module uses the A/D Converter to measure the voltage across a capacitor that is connected to one of the analog input channels.
- Pulse Generation: When generating system clock independent output pulses, the CTMU module uses Comparator 2 and the associated comparator voltage reference.

19.3 Calibrating the CTMU Module

The CTMU requires calibration for precise measurements of capacitance and time, as well as for accurate time delay. If the application only requires measurement of a relative change in capacitance or time, calibration is usually not necessary. An example of this type of application would include a capacitive touch switch, in which the touch circuit has a baseline capacitance, and the added capacitance of the human body changes the overall capacitance of a circuit.

If actual capacitance or time measurement is required, two hardware calibrations must take place: the current source needs calibration to set it to a precise current, and the circuit being measured needs calibration to measure and/or nullify all other capacitance other than that to be measured.

19.3.1 CURRENT SOURCE CALIBRATION

The current source on the CTMU module is trimable. Therefore, for precise measurements, it is possible to measure and adjust this current source by placing a high precision resistor, RCAL, onto an unused analog channel. An example circuit is shown in Figure 19-2. The current source measurement is performed using the following steps:

1. Initialize the A/D Converter.
2. Initialize the CTMU.
3. Enable the current source by setting EDG1STAT (CTMUCONL<0>).
4. Issue settling time delay.
5. Perform A/D conversion.
6. Calculate the current source current using $I = V/R_{CAL}$, where R_{CAL} is a high precision resistance and V is measured by performing an A/D conversion.

The CTMU current source may be trimmed with the trim bits in CTMUICON using an iterative process to get an exact desired current. Alternatively, the nominal value without adjustment may be used; it may be stored by the software for use in all subsequent capacitive or time measurements.

To calculate the value for R_{CAL}, the nominal current must be chosen, and then the resistance can be calculated. For example, if the A/D Converter reference voltage is 3.3V, use 70% of full scale, or 2.31V as the desired approximate voltage to be read by the A/D Converter. If the range of the CTMU current source is selected to be 0.55 μA, the resistor value needed is calculated as $R_{CAL} = 2.31V/0.55\ \mu A$, for a value of 4.2 MΩ. Similarly, if the current source is chosen to be 5.5 μA, R_{CAL} would be 420,000Ω, and 42,000Ω if the current source is set to 55 μA.

FIGURE 19-2: CTMU CURRENT SOURCE CALIBRATION CIRCUIT

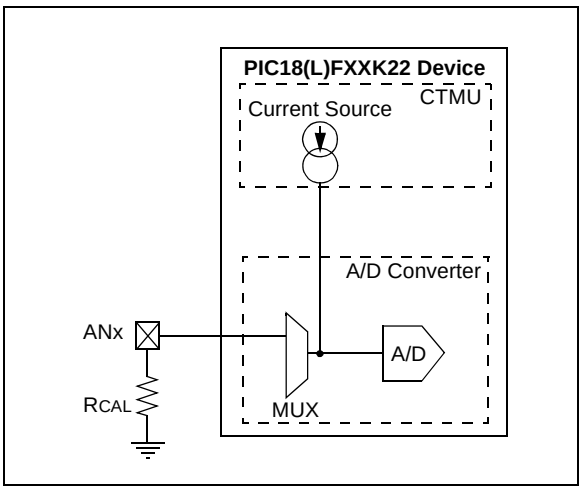

A value of 70% of full-scale voltage is chosen to make sure that the A/D Converter was in a range that is well above the noise floor. Keep in mind that if an exact current is chosen, that is to incorporate the trimming bits from CTMUICON, the resistor value of RCAL may need to be adjusted accordingly. RCAL may also be adjusted to allow for available resistor values. RCAL should be of the highest precision available, keeping in mind the amount of precision needed for the circuit that the CTMU will be used to measure. A recommended minimum would be 0.1% tolerance.

The following examples show one typical method for performing a CTMU current calibration. Example 19-1 demonstrates how to initialize the A/D Converter and the CTMU; this routine is typical for applications using both modules. Example 19-2 demonstrates one method for the actual calibration routine.

© 2010-2016 Microchip Technology Inc.

EXAMPLE 19-1: SETUP FOR CTMU CALIBRATION ROUTINES

```
#include "p18cxxx.h"
/*************************************************************************/
/*Set up CTMU ************************************************************/
/*************************************************************************/
void setup(void)

{ //CTMUCONH/1 - CTMU Control registers

    CTMUCONH = 0x00;    //make sure CTMU is disabled
    CTMUCONL = 0x90;
    //CTMU continues to run when emulator is stopped,CTMU continues
    //to run in idle mode,Time Generation mode disabled, Edges are blocked
    //No edge sequence order, Analog current source not grounded, trigger
    //output disabled, Edge2 polarity = positive level, Edge2 source =
    //source 0, Edge1 polarity = positive level, Edge1 source = source 0,


    //CTMUICON - CTMU Current Control Register
    CTMUICON = 0x01;    //0.55uA, Nominal - No Adjustment

/*************************************************************************/
//Set up AD converter;
/*************************************************************************/

    TRISA=0x04;                 //set channel 2 as an input

    // Configure AN2 as an analog channel
    ANSELAbits.ANSA2=1;
    TRISAbits.TRISA2=1;

   // ADCON2
   ADCON2bits.ADFM=1;           // Results format 1= Right justified
   ADCON2bits.ACQT=1;           // Acquition time 7 = 20TAD 2 = 4TAD 1=2TAD
   ADCON2bits.ADCS=2;           // Clock conversion bits 6= FOSC/64 2=FOSC/32



   // ADCON1
   ADCON1bits.PVCFG0 =0;         // Vref+ = AVdd
   ADCON1bits.NVCFG1 =0;         // Vref- = AVss
  //  ADCON0
   ADCON0bits.CHS=2;            // Select ADC channel

   ADCON0bits.ADON=1;           // Turn on ADC

}
```

EXAMPLE 19-2: CURRENT CALIBRATION ROUTINE

```
#include "p18cxxx.h"

#define COUNT 500                           //@ 8MHz = 125uS.
#define DELAY for(i=0;i<COUNT;i++)
#define RCAL .027                           //R value is 4200000 (4.2M)
                                            //scaled so that result is in
                                            //1/100th of uA
#define ADSCALE 1023                        //for unsigned conversion 10 sig bits
#define ADREF 3.3                           //Vdd connected to A/D Vr+

int main(void)
{
    int i;
    int j = 0;                              //index for loop
    unsigned int Vread = 0;
    double VTot = 0;
    float Vavg=0, Vcal=0, CTMUISrc = 0;     //float values stored for calcs

//assume CTMU and A/D have been set up correctly
//see Example 25-1 for CTMU & A/D setup
setup();

CTMUCONHbits.CTMUEN = 1;                    //Enable the CTMU
CTMUCONLbits.EDG1STAT = 0;                  // Set Edge status bits to zero
CTMUCONLbits.EDG2STAT = 0;
    for(j=0;j<10;j++)
    {
        CTMUCONHbits.IDISSEN = 1;           //drain charge on the circuit
        DELAY;                              //wait 125us
        CTMUCONHbits.IDISSEN = 0;           //end drain of circuit

        CTMUCONLbits.EDG1STAT = 1;          //Begin charging the circuit
                                            //using CTMU current source
        DELAY;                              //wait for 125us
        CTMUCONLbits.EDG1STAT = 0;          //Stop charging circuit

        PIR1bits.ADIF = 0;                  //make sure A/D Int not set
        ADCON0bits.GO=1;                    //and begin A/D conv.
        while(!PIR1bits.ADIF);              //Wait for A/D convert complete

        Vread = ADRES;                      //Get the value from the A/D
        PIR1bits.ADIF = 0;                  //Clear A/D Interrupt Flag
        VTot += Vread;                      //Add the reading to the total
    }

    Vavg = (float)(VTot/10.000);            //Average of 10 readings
    Vcal = (float)(Vavg/ADSCALE*ADREF);
    CTMUISrc = Vcal/RCAL;                   //CTMUISrc is in 1/100ths of uA

}
```


© 2010-2016 Microchip Technology Inc.

19.3.2 CAPACITANCE CALIBRATION

There is a small amount of capacitance from the internal A/D Converter sample capacitor as well as stray capacitance from the circuit board traces and pads that affect the precision of capacitance measurements. A measurement of the stray capacitance can be taken by making sure the desired capacitance to be measured has been removed. The measurement is then performed using the following steps:

1. Initialize the A/D Converter and the CTMU.
2. Set EDG1STAT (= 1).
3. Wait for a fixed delay of time t.
4. Clear EDG1STAT.
5. Perform an A/D conversion.
6. Calculate the stray and A/D sample capacitances:

$$C_{OFFSET} = C_{STRAY} + C_{AD} = (I \cdot t)/V$$

where I is known from the current source measurement step, t is a fixed delay and V is measured by performing an A/D conversion.

This measured value is then stored and used for calculations of time measurement or subtracted for capacitance measurement. For calibration, it is expected that the capacitance of $C_{STRAY} + C_{AD}$ is approximately known. C_{AD} is approximately 4 pF.

An iterative process may need to be used to adjust the time, t, that the circuit is charged to obtain a reasonable voltage reading from the A/D Converter. The value of t may be determined by setting C_{OFFSET} to a theoretical value, then solving for t. For example, if C_{STRAY} is theoretically calculated to be 11 pF, and V is expected to be 70% of V_{DD}, or 2.31V, then t would be:

$$(4\ \text{pF} + 11\ \text{pF}) \bullet 2.31\text{V}/0.55\ \mu\text{A}$$

or 63 μs.

See Example 19-3 for a typical routine for CTMU capacitance calibration.

EXAMPLE 19-3: CAPACITANCE CALIBRATION ROUTINE

```
#include "p18cxxx.h"

#define COUNT 25                            //@ 8MHz INTFRC = 62.5 us.
#define ETIME COUNT*2.5                     //time in uS
#define DELAY for(i=0;i<COUNT;i++)
#define ADSCALE 1023                        //for unsigned conversion 10 sig
bits
#define ADREF 3.3                           //Vdd connected to A/D Vr+
#define RCAL .027                           //R value is 4200000 (4.2M)
                                            //scaled so that result is in
                                            //1/100th of uA

int main(void)
{
    int i;
    int j = 0;                              //index for loop
    unsigned int Vread = 0;
    float CTMUISrc, CTMUCap, Vavg, VTot, Vcal;

//assume CTMU and A/D have been set up correctly
//see Example 25-1 for CTMU & A/D setup
setup();

CTMUCONHbits.CTMUEN = 1;                    //Enable the CTMU
CTMUCONLbits.EDG1STAT = 0;                  // Set Edge status bits to zero
CTMUCONLbits.EDG2STAT = 0;
    for(j=0;j<10;j++)
    {
        CTMUCONHbits.IDISSEN = 1;           //drain charge on the circuit
        DELAY;                              //wait 125us
        CTMUCONHbits.IDISSEN = 0;           //end drain of circuit

        CTMUCONLbits.EDG1STAT = 1;          //Begin charging the circuit
                                            //using CTMU current source
        DELAY;                              //wait for 125us
        CTMUCONLbits.EDG1STAT = 0;          //Stop charging circuit

        PIR1bits.ADIF = 0;                  //make sure A/D Int not set
        ADCON0bits.GO=1;                    //and begin A/D conv.
        while(!PIR1bits.ADIF);              //Wait for A/D convert complete


        Vread = ADRES;                      //Get the value from the A/D
        PIR1bits.ADIF = 0;                  //Clear A/D Interrupt Flag
        VTot += Vread;                      //Add the reading to the total
    }

    Vavg = (float)(VTot/10.000);            //Average of 10 readings
    Vcal = (float)(Vavg/ADSCALE*ADREF);
    CTMUISrc = Vcal/RCAL;                   //CTMUISrc is in 1/100ths of uA
    CTMUCap = (CTMUISrc*ETIME/Vcal)/100;
}
```


© 2010-2016 Microchip Technology Inc.

19.4 Measuring Capacitance with the CTMU

There are two separate methods of measuring capacitance with the CTMU. The first is the absolute method, in which the actual capacitance value is desired. The second is the relative method, in which the actual capacitance is not needed, rather an indication of a change in capacitance is required.

19.4.1 ABSOLUTE CAPACITANCE MEASUREMENT

For absolute capacitance measurements, both the current and capacitance calibration steps found in **Section 19.3 "Calibrating the CTMU Module"** should be followed. Capacitance measurements are then performed using the following steps:

1. Initialize the A/D Converter.
2. Initialize the CTMU.
3. Set EDG1STAT.
4. Wait for a fixed delay, T.
5. Clear EDG1STAT.
6. Perform an A/D conversion.
7. Calculate the total capacitance, $C_{TOTAL} = (I * T)/V$, where I is known from the current source measurement step (see **Section 19.3.1 "Current Source Calibration"**), T is a fixed delay and V is measured by performing an A/D conversion.
8. Subtract the stray and A/D capacitance (C_{OFFSET} from **Section 19.3.2 "Capacitance Calibration"**) from C_{TOTAL} to determine the measured capacitance.

19.4.2 RELATIVE CHARGE MEASUREMENT

An application may not require precise capacitance measurements. For example, when detecting a valid press of a capacitance-based switch, detecting a relative change of capacitance is of interest. In this type of application, when the switch is open (or not touched), the total capacitance is the capacitance of the combination of the board traces, the A/D Converter, etc. A larger voltage will be measured by the A/D Converter. When the switch is closed (or is touched), the total capacitance is larger due to the addition of the capacitance of the human body to the above listed capacitances, and a smaller voltage will be measured by the A/D Converter.

Detecting capacitance changes is easily accomplished with the CTMU using these steps:

1. Initialize the A/D Converter and the CTMU.
2. Set EDG1STAT.
3. Wait for a fixed delay.
4. Clear EDG1STAT.
5. Perform an A/D conversion.

The voltage measured by performing the A/D conversion is an indication of the relative capacitance. Note that in this case, no calibration of the current source or circuit capacitance measurement is needed. See Example 19-4 for a sample software routine for a capacitive touch switch.

EXAMPLE 19-4: ROUTINE FOR CAPACITIVE TOUCH SWITCH

```
#include "p18cxxx.h"

#define COUNT 500                       //@ 8MHz = 125uS.
#define DELAY for(i=0;i<COUNT;i++)
#define OPENSW 1000                     //Un-pressed switch value
#define TRIP 300                        //Difference between pressed
                                        //and un-pressed switch
#define HYST 65                         //amount to change
                                        //from pressed to un-pressed
#define PRESSED 1
#define UNPRESSED 0

int main(void)
{
    unsigned int Vread;                 //storage for reading
    unsigned int switchState;
    int i;

    //assume CTMU and A/D have been set up correctly
    //see Example 25-1 for CTMU & A/D setup
    setup();

    CTMUCONHbits.CTMUEN = 1;            // Enable the CTMU
    CTMUCONLbits.EDG1STAT = 0;          // Set Edge status bits to zero
    CTMUCONLbits.EDG2STAT = 0;
    CTMUCONHbits.IDISSEN = 1;           //drain charge on the circuit
    DELAY;                              //wait 125us
    CTMUCONHbits.IDISSEN = 0;           //end drain of circuit

    CTMUCONLbits.EDG1STAT = 1;          //Begin charging the circuit
                                        //using CTMU current source
    DELAY;                              //wait for 125us
    CTMUCONLbits.EDG1STAT = 0;          //Stop charging circuit

    PIR1bits.ADIF = 0;                  //make sure A/D Int not set
    ADCON0bits.GO=1;                    //and begin A/D conv.
    while(!PIR1bits.ADIF);              //Wait for A/D convert complete

    Vread = ADRES;                      //Get the value from the A/D

    if(Vread < OPENSW - TRIP)
    {
        switchState = PRESSED;
    }
    else if(Vread > OPENSW - TRIP + HYST)
    {
        switchState = UNPRESSED;
    }
}
```


© 2010-2016 Microchip Technology Inc.

19.5 Measuring Time with the CTMU Module

Time can be precisely measured after the ratio (*C/I*) is measured from the current and capacitance calibration step by following these steps:

1. Initialize the A/D Converter and the CTMU.
2. Set EDG1STAT.
3. Set EDG2STAT.
4. Perform an A/D conversion.
5. Calculate the time between edges as $T = (C/I) * V$, where I is calculated in the current calibration step (**Section 19.3.1 "Current Source Calibration"**), C is calculated in the capacitance calibration step (**Section 19.3.2 "Capacitance Calibration"**) and V is measured by performing the A/D conversion.

It is assumed that the time measured is small enough that the capacitance, C_{OFFSET}, provides a valid voltage to the A/D Converter. For the smallest time measurement, always set the A/D Channel Select register (AD1CHS) to an unused A/D channel; the corresponding pin for which is not connected to any circuit board trace. This minimizes added stray capacitance, keeping the total circuit capacitance close to that of the A/D Converter itself (4-5 pF). To measure longer time intervals, an external capacitor may be connected to an A/D channel and this channel selected when making a time measurement.

FIGURE 19-3: TYPICAL CONNECTIONS AND INTERNAL CONFIGURATION FOR TIME MEASUREMENT

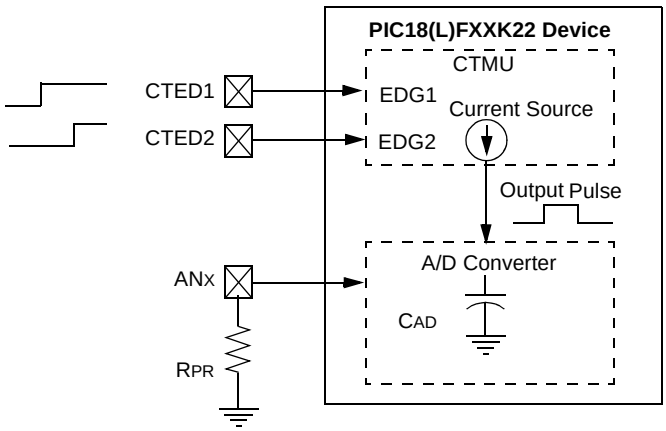

19.6 Creating a Delay with the CTMU Module

A unique feature on board the CTMU module is its ability to generate system clock independent output pulses based on an external capacitor value. This is accomplished using the internal comparator voltage reference module, Comparator 2 input pin and an external capacitor. The pulse is output onto the CTPLS pin. To enable this mode, set the TGEN bit.

See Figure 19-4 for an example circuit. C_{PULSE} is chosen by the user to determine the output pulse width on CTPLS. The pulse width is calculated by $T = (C_{PULSE}/I)*V$, where I is known from the current source measurement step (**Section 19.3.1 "Current Source Calibration"**) and V is the internal reference voltage (CV_{REF}).

An example use of this feature is for interfacing with variable capacitive-based sensors, such as a humidity sensor. As the humidity varies, the pulse width output on CTPLS will vary. The CTPLS output pin can be connected to an input capture pin and the varying pulse width is measured to determine the humidity in the application.

Follow these steps to use this feature:

1. Initialize Comparator 2.
2. Initialize the comparator voltage reference.
3. Initialize the CTMU and enable time delay generation by setting the TGEN bit.
4. Set EDG1STAT.
5. When C_{PULSE} charges to the value of the voltage reference trip point, an output pulse is generated on CTPLS.

FIGURE 19-4: TYPICAL CONNECTIONS AND INTERNAL CONFIGURATION FOR PULSE DELAY GENERATION

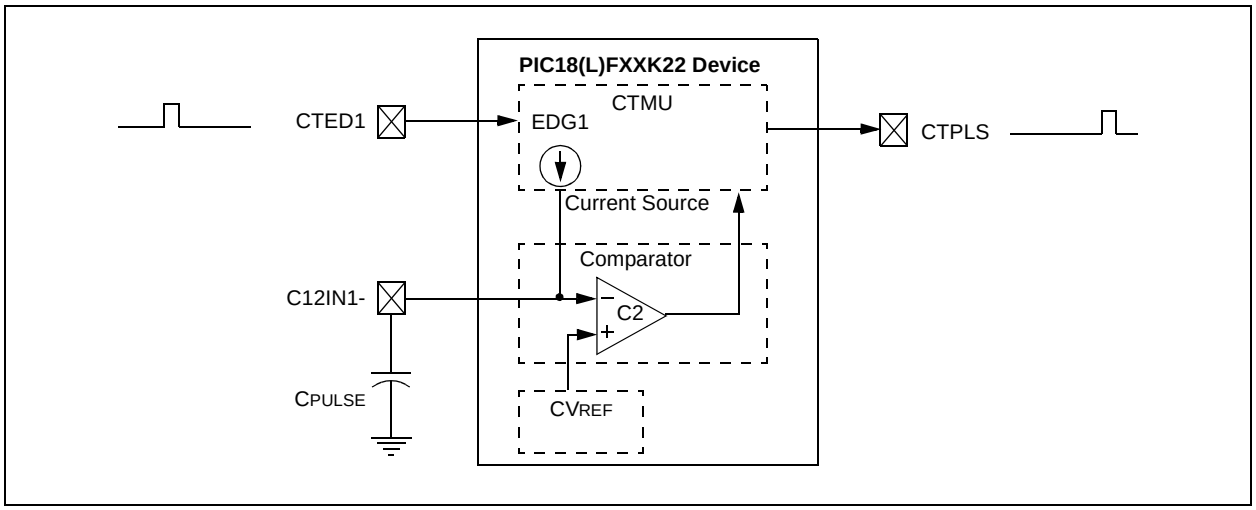

19.7 Operation During Sleep/Idle Modes

19.7.1 SLEEP MODE AND DEEP SLEEP MODES

When the device enters any Sleep mode, the CTMU module current source is always disabled. If the CTMU is performing an operation that depends on the current source when Sleep mode is invoked, the operation may not terminate correctly. Capacitance and time measurements may return erroneous values.

19.7.2 IDLE MODE

The behavior of the CTMU in Idle mode is determined by the CTMUSIDL bit (CTMUCONH<5>). If CTMUSIDL is cleared, the module will continue to operate in Idle mode. If CTMUSIDL is set, the module's current source is disabled when the device enters Idle mode. If the module is performing an operation when Idle mode is invoked, in this case, the results will be similar to those with Sleep mode.

19.8 CTMU Peripheral Module Disable (PMD)

When this peripheral is not used, the Peripheral Module Disable bit can be set to disconnect all clock sources to the module, reducing power consumption to an absolute minimum. See **Section 3.6 "Selective Peripheral Module Control"**.

© 2010-2016 Microchip Technology Inc.

19.9 Effects of a Reset on CTMU

Upon Reset, all registers of the CTMU are cleared. This leaves the CTMU module disabled, its current source is turned off and all configuration options return to their default settings. The module needs to be re-initialized following any Reset.

If the CTMU is in the process of taking a measurement at the time of Reset, the measurement will be lost. A partial charge may exist on the circuit that was being measured, and should be properly discharged before the CTMU makes subsequent attempts to make a measurement. The circuit is discharged by setting and then clearing the IDISSEN bit (CTMUCONH<1>) while the A/D Converter is connected to the appropriate channel.

19.10 Registers

There are three control registers for the CTMU:

- CTMUCONH
- CTMUCONL
- CTMUICON

The CTMUCONH and CTMUCONL registers (Register 19-1 and Register 19-2) contain control bits for configuring the CTMU module edge source selection, edge source polarity selection, edge sequencing, A/D trigger, analog circuit capacitor discharge and enables. The CTMUICON register (Register 19-3) has bits for selecting the current source range and current source trim.

19.11 Register Definitions: CTMU Control

REGISTER 19-1: CTMUCONH: CTMU CONTROL REGISTER 0

R/W-0	U-0	R/W-0	R/W-0	R/W-0	R/W-0	R/W-0	U-0
CTMUEN	—	CTMUSIDL	TGEN	EDGEN	EDGSEQEN	IDISSEN	CTTRIG
bit 7							bit 0

Legend:			
R = Readable bit	W = Writable bit	U = Unimplemented bit, read as ‘0’	
-n = Value at POR	‘1’ = Bit is set	‘0’ = Bit is cleared	x = Bit is unknown

bit 7 **CTMUEN:** CTMU Enable bit
1 = Module is enabled
0 = Module is disabled

bit 6 **Unimplemented:** Read as ‘0’

bit 5 **CTMUSIDL:** Stop in Idle Mode bit
1 = Discontinue module operation when device enters Idle mode
0 = Continue module operation in Idle mode

bit 4 **TGEN:** Time Generation Enable bit
1 = Enables edge delay generation
0 = Disables edge delay generation

bit 3 **EDGEN:** Edge Enable bit
1 = Edges are not blocked
0 = Edges are blocked

bit 2 **EDGSEQEN:** Edge Sequence Enable bit
1 = Edge 1 event must occur before Edge 2 event can occur
0 = No edge sequence is needed

bit 1 **IDISSEN:** Analog Current Source Control bit
1 = Analog current source output is grounded
0 = Analog current source output is not grounded

bit 0 **CTTRIG:** CTMU Special Event Trigger Control Bit
1 = CTMU Special Event Trigger is enabled
0 = CTMU Special Event Trigger is disabled

REGISTER 19-2: CTMUCONL: CTMU CONTROL REGISTER 1

R/W-0	R/W-0	R/W-0	R/W-0	R/W-0	R/W-0	R/W-0	R/W-0
EDG2POL	EDG2SEL<1:0>		EDG1POL	EDG1SEL1	EDG1SEL0	EDG2STAT	EDG1STAT
bit 7							bit 0

Legend:			
R = Readable bit	W = Writable bit	U = Unimplemented bit, read as ‘0’	
-n = Value at POR	‘1’ = Bit is set	‘0’ = Bit is cleared	x = Bit is unknown

bit 7 **EDG2POL:** Edge 2 Polarity Select bit
`1` = Edge 2 programmed for a positive edge response
`0` = Edge 2 programmed for a negative edge response

bit 6-5 **EDG2SEL<1:0>:** Edge 2 Source Select bits
`11` = CTED1 pin
`10` = CTED2 pin
`01` = ECCP1 Special Event Trigger
`00` = ECCP2 Special Event Trigger

bit 4 **EDG1POL:** Edge 1 Polarity Select bit
`1` = Edge 1 programmed for a positive edge response
`0` = Edge 1 programmed for a negative edge response

bit 3-2 **EDG1SEL<1:0>:** Edge 1 Source Select bits
`11` = CTED1 pin
`10` = CTED2 pin
`01` = ECCP1 Special Event Trigger
`00` = ECCP2 Special Event Trigger

bit 1 **EDG2STAT:** Edge 2 Status bit
`1` = Edge 2 event has occurred
`0` = Edge 2 event has not occurred

bit 0 **EDG1STAT:** Edge 1 Status bit
`1` = Edge 1 event has occurred
`0` = Edge 1 event has not occurred

© 2010-2016 Microchip Technology Inc.

REGISTER 19-3: CTMUICON: CTMU CURRENT CONTROL REGISTER

R/W-0	R/W-0	R/W-0	R/W-0	R/W-0	R/W-0	R/W-0	R/W-0
ITRIM<5:0>						IRNG<1:0>	
bit 7							bit 0

Legend:			
R = Readable bit	W = Writable bit	U = Unimplemented bit, read as ‘0’	
-n = Value at POR	‘1’ = Bit is set	‘0’ = Bit is cleared	x = Bit is unknown

bit 7-2 **ITRIM<5:0>:** Current Source Trim bits
`011111` = Maximum positive change from nominal current
`011110`
.
.
.
`000001` = Minimum positive change from nominal current
`000000` = Nominal current output specified by IRNG<1:0>
`111111` = Minimum negative change from nominal current
.
.
.
`100010`
`100001` = Maximum negative change from nominal current

bit 1-0 **IRNG<1:0>:** Current Source Range Select bits (see Table 27-4)
`11` = 100 × Base current
`10` = 10 × Base current
`01` = Base current level
`00` = Current source disabled

TABLE 19-1: REGISTERS ASSOCIATED WITH CTMU MODULE

Name	Bit 7	Bit 6	Bit 5	Bit 4	Bit 3	Bit 2	Bit 1	Bit 0	Reset Values on Page
CTMUCONH	CTMUEN	—	CTMUSIDL	TGEN	EDGEN	EDGSEQEN	IDISSEN	CTTRIG	323
CTMUCONL	EDG2POL	EDG2SEL<1:0>		EDG1POL	EDG1SEL<1:0>		EDG2STAT	EDG1STAT	324
CTMUICON	ITRIM<5:0>						IRNG<1:0>		325
IPR3	SSP2IP	BCL2IP	RC2IP	TX2IP	CTMUIP	TMR5GIP	TMR3GIP	TMR1GIP	123
PIE3	SSP2IE	BCL2IE	RC2IE	TX2IE	CTMUIE	TMR5GIE	TMR3GIE	TMR1GIE	119
PIR3	SSP2IF	BCL2IF	RC2IF	TX2IF	CTMUIF	TMR5GIF	TMR3GIF	TMR1GIF	114
PMD2	—	—	—	—	CTMUMD	CMP2MD	CMP1MD	ADCMD	54

Legend: — = unimplemented, read as ‘0’. Shaded bits are not used during CTMU operation.

20.0 SR LATCH

The module consists of a single SR latch with multiple Set and Reset inputs as well as separate latch outputs. The SR latch module includes the following features:

- Programmable input selection
- SR latch output is available internally/externally
- Selectable Q and $\overline{Q}$ output
- Firmware Set and Reset

The SR latch can be used in a variety of analog applications, including oscillator circuits, one-shot circuit, hysteretic controllers, and analog timing applications.

20.1 Latch Operation

The latch is a Set-Reset latch that does not depend on a clock source. Each of the Set and Reset inputs are active-high. The latch can be set or reset by:

- Software control (SRPS and SRPR bits)
- Comparator C1 output (sync_C1OUT)
- Comparator C2 output (sync_C2OUT)
- SRI Pin
- Programmable clock (DIVSRCLK)

The SRPS and the SRPR bits of the SRCON0 register may be used to set or reset the SR latch, respectively. The latch is Reset-dominant. Therefore, if both Set and Reset inputs are high, the latch will go to the Reset state. Both the SRPS and SRPR bits are self resetting which means that a single write to either of the bits is all that is necessary to complete a latch Set or Reset operation.

The output from Comparator C1 or C2 can be used as the Set or Reset inputs of the SR latch. The output of either Comparator can be synchronized to the Timer1 clock source. See **Section 18.0 "Comparator Module"** and **Section 12.0 "Timer1/3/5 Module with Gate Control"** for more information.

An external source on the SRI pin can be used as the Set or Reset inputs of the SR latch.

An internal clock source, DIVSRCLK, is available and it can periodically set or reset the SR latch. The SRCLK<2:0> bits in the SRCON0 register are used to select the clock source period. The SRSCKE and SRRCKE bits of the SRCON1 register enable the clock source to set or reset the SR latch, respectively.

20.2 Latch Output

The SRQEN and SRNQEN bits of the SRCON0 register control the Q and $\overline{Q}$ latch outputs. Both of the SR latch outputs may be directly output to I/O pins at the same time. Control is determined by the state of bits SRQEN and SRNQEN in the SRCON0 register.

The applicable TRIS bit of the corresponding port must be cleared to enable the port pin output driver.

20.3 DIVSRCLK Clock Generation

The DIVSRCLK clock signal is generated from the peripheral clock which is pre-scaled by a value determined by the SRCLK<2:0> bits. See Figure 20-2 and Table 20-1 for additional detail.

20.4 Effects of a Reset

Upon any device Reset, the SR latch is not initialized, and the SRQ and SRNQ outputs are unknown. The user's firmware is responsible to initialize the latch output before enabling it to the output pins.

© 2010-2016 Microchip Technology Inc.

FIGURE 20-1: DIVSRCLK BLOCK DIAGRAM

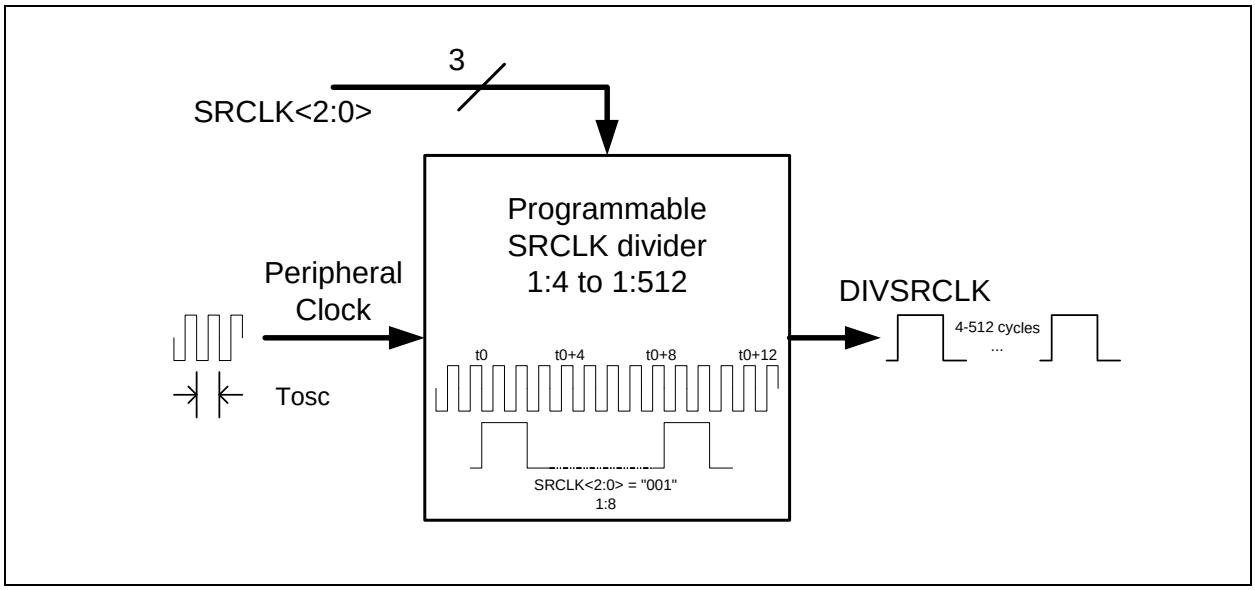

FIGURE 20-2: SR LATCH SIMPLIFIED BLOCK DIAGRAM

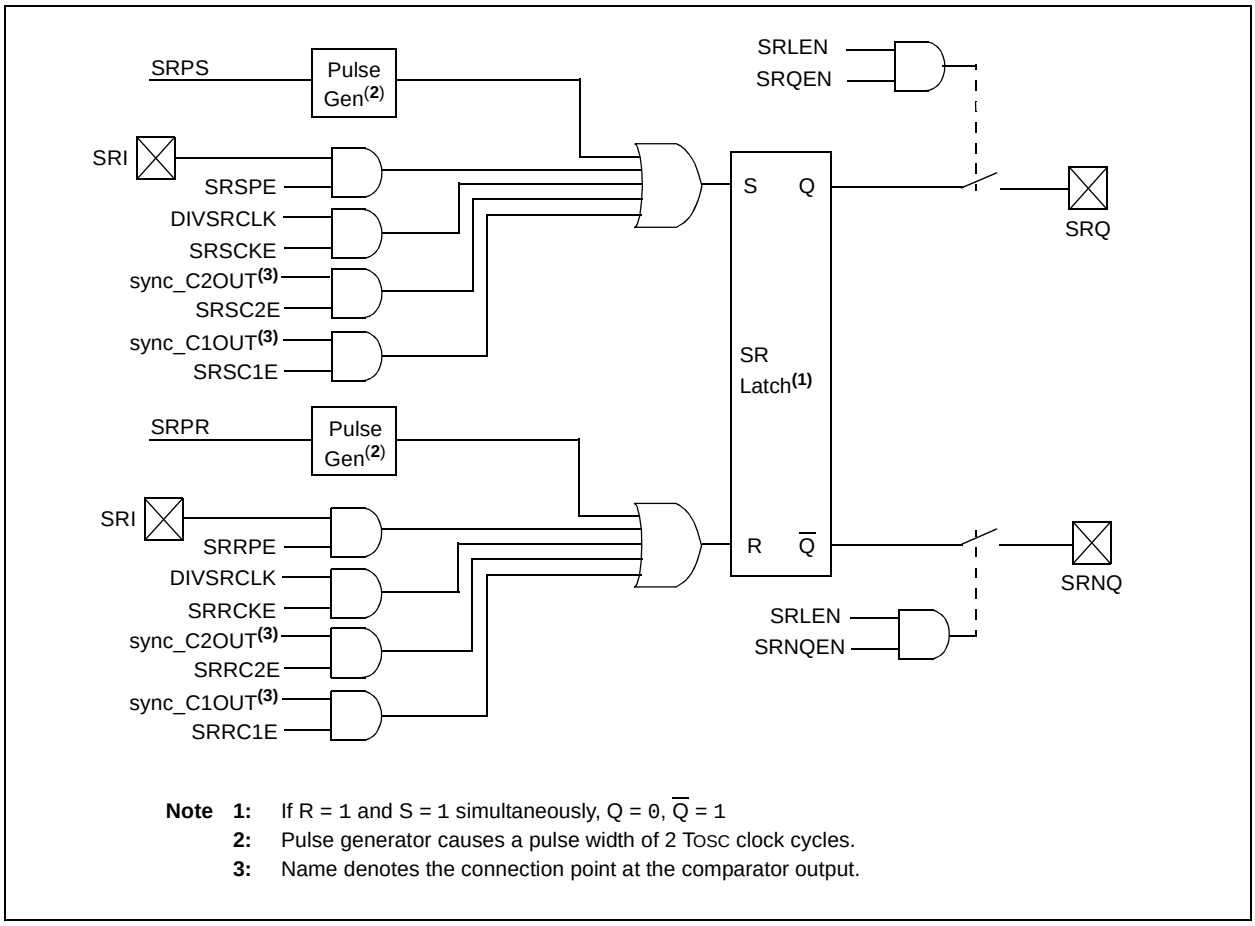

Note 1: If R = 1 and S = 1 simultaneously, Q = 0, $\overline{Q}$ = 1

2: Pulse generator causes a pulse width of 2 TOSC clock cycles.

3: Name denotes the connection point at the comparator output.

TABLE 20-1: DIVSRCLK FREQUENCY TABLE

SRCLK<2:0>	Divider	Fosc = 20 MHz	Fosc = 16 MHz	Fosc = 8 MHz	Fosc = 4 MHz	Fosc = 1 MHz
111	512	25.6 μs	32 μs	64 μs	128 μs	512 μs
110	256	12.8 μs	16 μs	32 μs	64 μs	256 μs
101	128	6.4 μs	8 μs	16 μs	32 μs	128 μs
100	64	3.2 μs	4 μs	8 μs	16 μs	64 μs
011	32	1.6 μs	2 μs	4 μs	8 μs	32 μs
010	16	0.8 μs	1 μs	2 μs	4 μs	16 μs
001	8	0.4 μs	0.5 μs	1 μs	2 μs	8 μs
000	4	0.2 μs	0.25 μs	0.5 μs	1 μs	4 μs

© 2010-2016 Microchip Technology Inc.

20.5 Register Definitions: SR Latch Control

REGISTER 20-1: SRCON0: SR LATCH CONTROL REGISTER

R/W-0	R/W-0	R/W-0	R/W-0	R/W-0	R/W-0	R/W-0	R/W-0
SRLEN	SRCLK<2:0>			SRQEN	SRNQEN	SRPS	SRPR
bit 7							bit 0

Legend:			
R = Readable bit	W = Writable bit	U = Unimplemented	C = Clearable only bit
-n = Value at POR	‘1’ = Bit is set	‘0’ = Bit is cleared	x = Bit is unknown

bit 7 **SRLEN:** SR Latch Enable bit(1)
1 = SR latch is enabled
0 = SR latch is disabled

bit 6-4 **SRCLK<2:0>:** SR Latch Clock Divider Bits
000 = Generates a 2 TOSC wide pulse on DIVSRCLK every 4 peripheral clock cycles
001 = Generates a 2 TOSC wide pulse on DIVSRCLK every 8 peripheral clock cycles
010 = Generates a 2 TOSC wide pulse on DIVSRCLK every 16 peripheral clock cycles
011 = Generates a 2 TOSC wide pulse on DIVSRCLK every 32 peripheral clock cycles
100 = Generates a 2 TOSC wide pulse on DIVSRCLK every 64 peripheral clock cycles
101 = Generates a 2 TOSC wide pulse on DIVSRCLK every 128 peripheral clock cycles
110 = Generates a 2 TOSC wide pulse on DIVSRCLK every 256 peripheral clock cycles
111 = Generates a 2 TOSC wide pulse on DIVSRCLK every 512 peripheral clock cycles

bit 3 **SRQEN:** SR Latch Q Output Enable bit
1 = Q is present on the SRQ pin
0 = Q is internal only

bit 2 **SRNQEN:** SR Latch $\overline{Q}$ Output Enable bit
1 = $\overline{Q}$ is present on the SRNQ pin
0 = $\overline{Q}$ is internal only

bit 1 **SRPS:** Pulse Set Input of the SR Latch bit(2)
1 = Pulse set input for two TOSC clock cycles
0 = No effect on set input

bit 0 **SRPR:** Pulse Reset Input of the SR Latch bit(2)
1 = Pulse reset input for two TOSC clock cycles
0 = No effect on Reset input

Note 1: Changing the SRCLK bits while the SR latch is enabled may cause false triggers to the set and Reset inputs of the latch.

2: Set only, always reads back ‘0’.

REGISTER 20-2: SRCON1: SR LATCH CONTROL REGISTER 1

R/W-0	R/W-0	R/W-0	R/W-0	R/W-0	R/W-0	R/W-0	R/W-0
SRSPE	SRSCKE	SRSC2E	SRSC1E	SRRPE	SRRCKE	SRRC2E	SRRC1E
bit 7							bit 0

Legend:			
R = Readable bit	W = Writable bit	U = Unimplemented	C = Clearable only bit
-n = Value at POR	‘1’ = Bit is set	‘0’ = Bit is cleared	x = Bit is unknown

bit 7 **SRSPE:** SR Latch Peripheral Set Enable bit
1 = SRI pin status sets SR latch
0 = SRI pin status has no effect on SR latch

bit 6 **SRSCKE:** SR Latch Set Clock Enable bit
1 = Set input of SR latch is pulsed with DIVSRCLK
0 = Set input of SR latch is not pulsed with DIVSRCLK

bit 5 **SRSC2E:** SR Latch C2 Set Enable bit
1 = C2 Comparator output sets SR latch
0 = C2 Comparator output has no effect on SR latch

bit 4 **SRSC1E:** SR Latch C1 Set Enable bit
1 = C1 Comparator output sets SR latch
0 = C1 Comparator output has no effect on SR latch

bit 3 **SRRPE:** SR Latch Peripheral Reset Enable bit
1 = SRI pin resets SR latch
0 = SRI pin has no effect on SR latch

bit 2 **SRRCKE:** SR Latch Reset Clock Enable bit
1 = Reset input of SR latch is pulsed with DIVSRCLK
0 = Reset input of SR latch is not pulsed with DIVSRCLK

bit 1 **SRRC2E:** SR Latch C2 Reset Enable bit
1 = C2 Comparator output resets SR latch
0 = C2 Comparator output has no effect on SR latch

bit 0 **SRRC1E:** SR Latch C1 Reset Enable bit
1 = C1 Comparator output resets SR latch
0 = C1 Comparator output has no effect on SR latch

TABLE 20-2: REGISTERS ASSOCIATED WITH THE SR LATCH

Name	Bit 7	Bit 6	Bit 5	Bit 4	Bit 3	Bit 2	Bit 1	Bit 0	Reset Values on page
SRCON0	SRLEN	SRCLK<2:0>			SRQEN	SRNQEN	SRPS	SRPR	329
SRCON1	SRSPE	SRSCKE	SRSC2E	SRSC1E	SRRPE	SRRCKE	SRRC2E	SRRC1E	330
TRISA	TRISA7	TRISA6	TRISA5	TRISA4	TRISA3	TRISA2	TRISA1	TRISA0	151
TRISB	TRISB7	TRISB6	TRISB5	TRISB4	TRISB3	TRISB2	TRISB1	TRISB0	151
WPUB	WPUB7	WPUB6	WPUB5	WPUB4	WPUB3	WPUB2	WPUB1	WPUB0	152

Legend: Shaded bits are not used with this module.

© 2010-2016 Microchip Technology Inc.

21.0 FIXED VOLTAGE REFERENCE (FVR)

The Fixed Voltage Reference, or FVR, is a stable voltage reference, independent of VDD, with 1.024V, 2.048V or 4.096V selectable output levels. The output of the FVR can be configured to supply a reference voltage to the following:

- ADC input channel
- ADC positive reference
- Comparator positive input
- Digital-to-Analog Converter (DAC)

The FVR can be enabled by setting the FVREN bit of the VREFCON0 register.

21.1 Independent Gain Amplifiers

The output of the FVR supplied to the ADC, Comparators and DAC is routed through an independent programmable gain amplifier. The amplifier can be configured to amplify the 1.024V reference voltage by 1x, 2x or 4x, to produce the three possible voltage levels.

The FVRS<1:0> bits of the VREFCON0 register are used to enable and configure the gain amplifier settings for the reference supplied to the DAC and Comparator modules. When the ADC module is configured to use the FVR output, (FVR BUF2) the reference is buffered through an additional unity gain amplifier. This buffer is disabled if the ADC is not configured to use the FVR.

For specific use of the FVR, refer to the specific module sections: **Section 17.0 "Analog-to-Digital Converter (ADC) Module"**, **Section 22.0 "Digital-to-Analog Converter (DAC) Module"** and **Section 18.0 "Comparator Module"**.

21.2 FVR Stabilization Period

When the Fixed Voltage Reference module is enabled, it requires time for the reference and amplifier circuits to stabilize. Once the circuits stabilize and are ready for use, the FVRST bit of the VREFCON0 register will be set. See Table 27-3 for the minimum delay requirement.

FIGURE 21-1: VOLTAGE REFERENCE BLOCK DIAGRAM

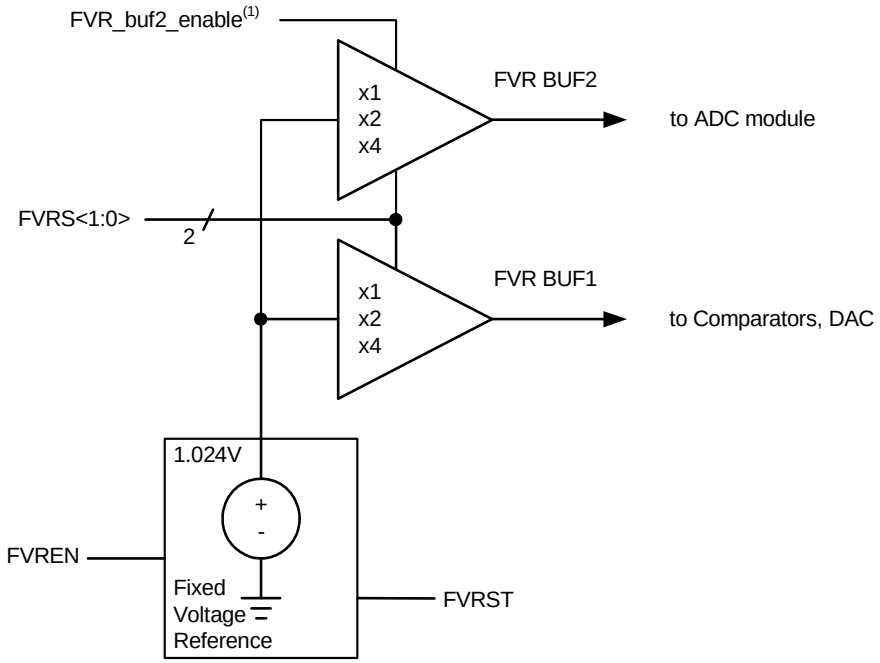

Note 1: FVR_buf2_enable = '1' when (ADON = '1') AND [(PVCFG<1:0> = '10') OR (CHS<4:0> = '11111')]

21.3 Register Definitions: FVR Control

REGISTER 21-1: VREFCON0: FIXED VOLTAGE REFERENCE CONTROL REGISTER

R/W-0	R/W-0	R/W-0	R/W-1	U-0	U-0	U-0	U-0
FVREN	FVRST	FVRS<1:0>		—	—	—	—
bit 7							bit 0

Legend:		
R = Readable bit	W = Writable bit	U = Unimplemented bit, read as ‘0’
u = Bit is unchanged	x = Bit is unknown	-n/n = Value at POR and BOR/Value at all other Resets
‘1’ = Bit is set	‘0’ = Bit is cleared	

bit 7 **FVREN:** Fixed Voltage Reference Enable bit
`0` = Fixed Voltage Reference is disabled
`1` = Fixed Voltage Reference is enabled

bit 6 **FVRST:** Fixed Voltage Reference Ready Flag bit
`0` = Fixed Voltage Reference output is not ready or not enabled
`1` = Fixed Voltage Reference output is ready for use

bit 5-4 **FVRS<1:0>:** Fixed Voltage Reference Selection bits
`00` = Fixed Voltage Reference Peripheral output is off
`01` = Fixed Voltage Reference Peripheral output is 1x (1.024V)
`10` = Fixed Voltage Reference Peripheral output is 2x (2.048V)(1)
`11` = Fixed Voltage Reference Peripheral output is 4x (4.096V)(1)

bit 3-2 **Reserved:** Read as ‘`0`’. Maintain these bits clear.

bit 1-0 **Unimplemented:** Read as ‘`0`’.

Note 1: Fixed Voltage Reference output cannot exceed VDD.

TABLE 21-1: SUMMARY OF REGISTERS ASSOCIATED WITH FIXED VOLTAGE REFERENCE

Name	Bit 7	Bit 6	Bit 5	Bit 4	Bit 3	Bit 2	Bit 1	Bit 0	Register on Page
VREFCON0	FVREN	FVRST	FVRS<1:0>		—	—	—	—	332

Legend: — = unimplemented locations, read as ‘`0`’. Shaded bits are not used by the FVR module.

© 2010-2016 Microchip Technology Inc.

22.0 DIGITAL-TO-ANALOG CONVERTER (DAC) MODULE

The Digital-to-Analog Converter supplies a variable voltage reference, ratiometric with the input source, with 32 selectable output levels.

The input of the DAC can be connected to:

- External VREF pins
- VDD supply voltage
- FVR (Fixed Voltage Reference)

The output of the DAC can be configured to supply a reference voltage to the following:

- Comparator positive input
- ADC input channel
- DACOUT pin

The Digital-to-Analog Converter (DAC) can be enabled by setting the DACEN bit of the VREFCON1 register.

22.1 Output Voltage Selection

The DAC has 32 voltage level ranges. The 32 levels are set with the DACR<4:0> bits of the VREFCON2 register.

The DAC output voltage is determined by the following equations:

EQUATION 22-1: DAC OUTPUT VOLTAGE

$$V_{OUT} = \left((V_{SRC+} - V_{SRC-}) ¥ \frac{DACR<4:0>}{2^5} \right) + V_{SRC-}$$

$$V_{SRC+} = V_{DD}, V_{REF+} \text{ or } FVR1$$

$$V_{SRC-} = V_{SS} \text{ or } V_{REF-}$$

22.2 Ratiometric Output Level

The DAC output value is derived using a resistor ladder with each end of the ladder tied to a positive and negative voltage reference input source. If the voltage of either input source fluctuates, a similar fluctuation will result in the DAC output value.

The value of the individual resistors within the ladder can be found in **Section 27.0 "Electrical Specifications"**.

22.3 Low-Power Voltage State

In order for the DAC module to consume the least amount of power, one of the two voltage reference input sources to the resistor ladder must be disconnected. Either the positive voltage source, (VSRC+), or the negative voltage source, (VSRC-) can be disabled.

The negative voltage source is disabled by setting the DACLPS bit in the VREFCON1 register. Clearing the DACLPS bit in the VREFCON1 register disables the positive voltage source.

22.4 Output Clamped to Positive Voltage Source

The DAC output voltage can be set to VSRC+ with the least amount of power consumption by performing the following:

- Clearing the DACEN bit in the VREFCON1 register.
- Setting the DACLPS bit in the VREFCON1 register.
- Configuring the DACPSS bits to the proper positive source.
- Configuring the DACRx bits to '11111' in the VREFCON2 register.

This is also the method used to output the voltage level from the FVR to an output pin. See **Section 22.6 "DAC Voltage Reference Output"** for more information.

22.5 Output Clamped to Negative Voltage Source

The DAC output voltage can be set to VSRC- with the least amount of power consumption by performing the following:

- Clearing the DACEN bit in the VREFCON1 register.
- Clearing the DACLPS bit in the VREFCON1 register.
- Configuring the DACPSS bits to the proper negative source.
- Configuring the DACRx bits to '00000' in the VREFCON2 register.

This allows the comparator to detect a zero-crossing while not consuming additional current through the DAC module.

22.6 DAC Voltage Reference Output

The DAC can be output to the DACOUT pin by setting the DACOE bit of the VREFCON1 register to '1'. Selecting the DAC reference voltage for output on the DACOUT pin automatically overrides the digital output buffer and digital input threshold detector functions of that pin. Reading the DACOUT pin when it has been configured for DAC reference voltage output will always return a '0'.

Due to the limited current drive capability, a buffer must be used on the DAC voltage reference output for external connections to DACOUT. Figure 22-2 shows an example buffering technique.

FIGURE 22-1: DIGITAL-TO-ANALOG CONVERTER BLOCK DIAGRAM

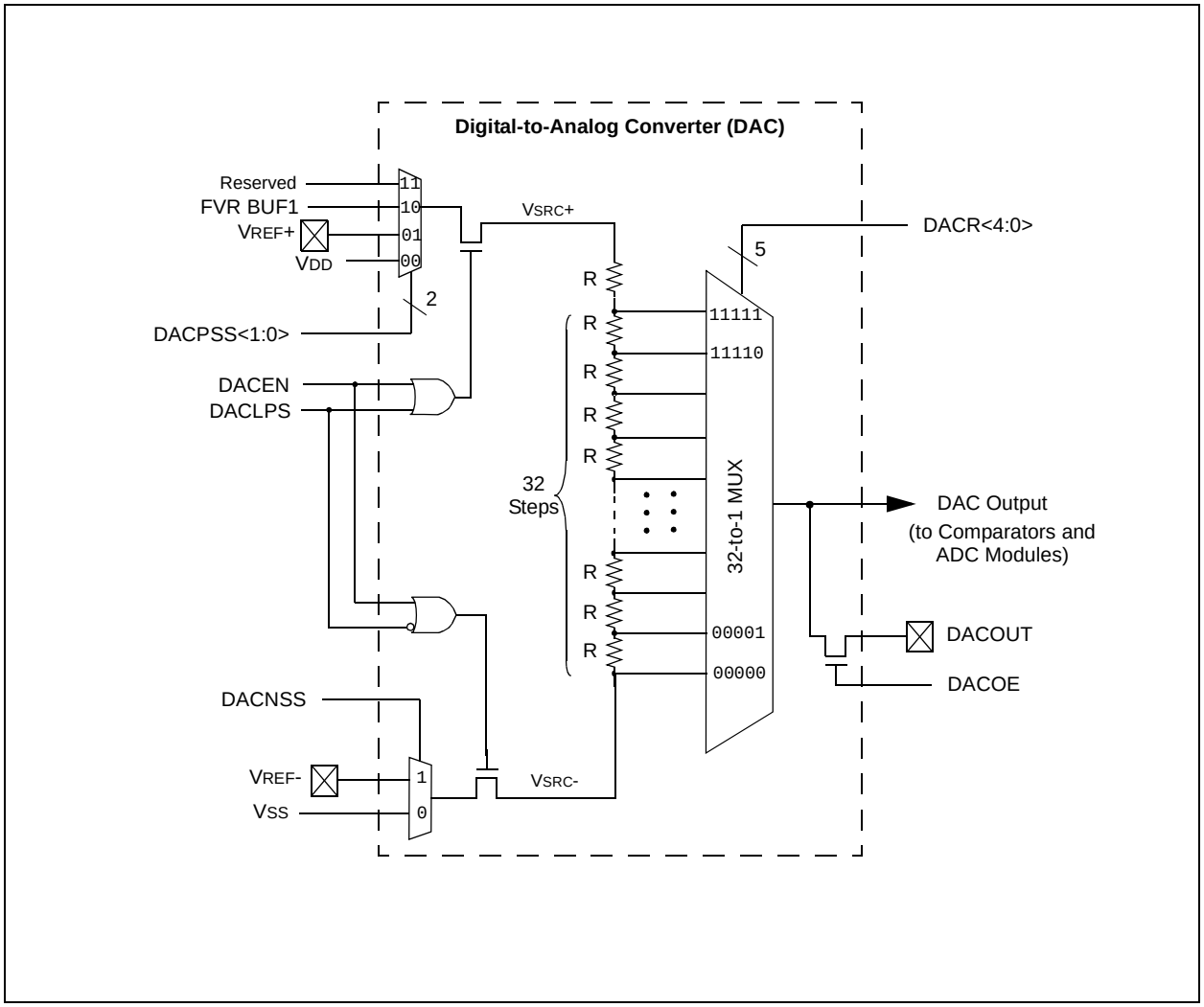

FIGURE 22-2: VOLTAGE REFERENCE OUTPUT BUFFER EXAMPLE

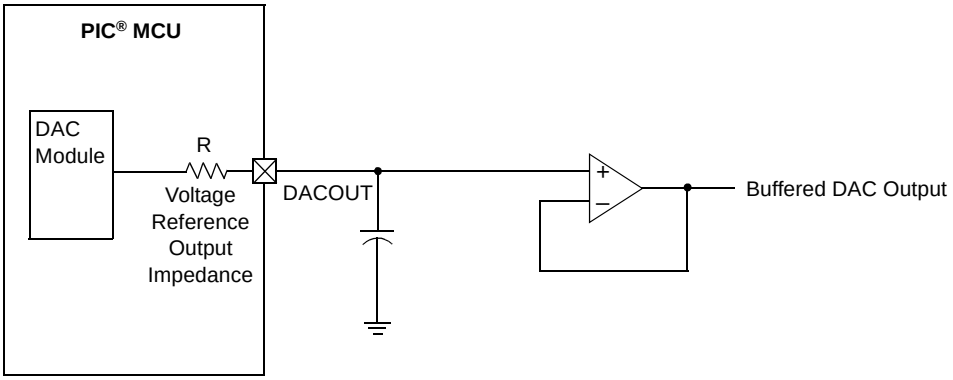

© 2010-2016 Microchip Technology Inc.

22.7 Operation During Sleep

When the device wakes up from Sleep through an interrupt or a Watchdog Timer time-out, the contents of the VREFCON1 register are not affected. To minimize current consumption in Sleep mode, the voltage reference should be disabled.

22.8 Effects of a Reset

A device Reset affects the following:

- DAC is disabled
- DAC output voltage is removed from the DACOUT pin
- The DACR<4:0> range select bits are cleared

22.9 Register Definitions: DAC Control

REGISTER 22-1: VREFCON1: VOLTAGE REFERENCE CONTROL REGISTER 0

R/W-0	R/W-0	R/W-0	U-0	R/W-0	R/W-0	U-0	R/W-0
DACEN	DACLPS	DACOE	—	DACPSS<1:0>		—	DACNSS
bit 7							bit 0

Legend:		
R = Readable bit	W = Writable bit	U = Unimplemented bit, read as ‘0’
u = Bit is unchanged	x = Bit is unknown	-n/n = Value at POR and BOR/Value at all other Resets
‘1’ = Bit is set	‘0’ = Bit is cleared	

bit 7 **DACEN:** DAC Enable bit
1 = DAC is enabled
0 = DAC is disabled

bit 6 **DACLPS:** DAC Low-Power Voltage Source Select bit
1 = DAC Positive reference source selected
0 = DAC Negative reference source selected

bit 5 **DACOE:** DAC Voltage Output Enable bit
1 = DAC voltage level is also an output on the DACOUT pin
0 = DAC voltage level is disconnected from the DACOUT pin

bit 4 **Unimplemented:** Read as ‘0’

bit 3-2 **DACPSS<1:0>:** DAC Positive Source Select bits
00 = V_{DD}
01 = V_{REF}+
10 = FVR BUF1 output
11 = Reserved, do not use

bit 1 **Unimplemented:** Read as ‘0’

bit 0 **DACNSS:** DAC Negative Source Select bits
1 = V_{REF}-
0 = V_{SS}

REGISTER 22-2: VREFCON2: VOLTAGE REFERENCE CONTROL REGISTER 1

U-0	U-0	U-0	R/W-0	R/W-0	R/W-0	R/W-0	R/W-0
—	—	—	DACR<4:0>				
bit 7							bit 0

Legend:		
R = Readable bit	W = Writable bit	U = Unimplemented bit, read as ‘0’
u = Bit is unchanged	x = Bit is unknown	-n/n = Value at POR and BOR/Value at all other Resets
‘1’ = Bit is set	‘0’ = Bit is cleared	

bit 7-5 **Unimplemented:** Read as ‘0’

bit 4-0 **DACR<4:0>:** DAC Voltage Output Select bits

$V_{OUT} = ((V_{SRC}+) - (V_{SRC}-))*(DACR<4:0>/(2^5)) + V_{SRC}-$

TABLE 22-1: REGISTERS ASSOCIATED WITH DAC MODULE

Name	Bit 7	Bit 6	Bit 5	Bit 4	Bit 3	Bit 2	Bit 1	Bit 0	Register on Page
VREFCON0	FVREN	FVRST	FVRS<1:0>		—	—	—	—	332
VREFCON1	DACEN	DACLPS	DACOE	—	DACPSS<1:0>		—	DACNSS	335
VREFCON2	—	—	—	DACR<4:0>					336

Legend: — = Unimplemented locations, read as ‘0’. Shaded bits are not used by the DAC module.

© 2010-2016 Microchip Technology Inc.

23.0 HIGH/LOW-VOLTAGE DETECT (HLVD)

The PIC18(L)F2X/4XK22 devices have a High/Low-Voltage Detect module (HLVD). This is a programmable circuit that sets both a device voltage trip point and the direction of change from that point. If the device experiences an excursion past the trip point in that direction, an interrupt flag is set. If the interrupt is enabled, the program execution branches to the interrupt vector address and the software responds to the interrupt.

The High/Low-Voltage Detect Control register (Register 23-1) completely controls the operation of the HLVD module. This allows the circuitry to be "turned off" by the user under software control, which minimizes the current consumption for the device.

The module's block diagram is shown in Figure 23-1.

23.1 Register - HLVD Control

REGISTER 23-1: HLVDCON: HIGH/LOW-VOLTAGE DETECT CONTROL REGISTER

R/W-0	R-0	R-0	R/W-0	R/W-0	R/W-1	R/W-0	R/W-1
VDIRMAG	BGVST	IRVST	HLVDEN	HLVDL<3:0>			
bit 7							bit 0

Legend:			
R = Readable bit	W = Writable bit	U = Unimplemented bit, read as '0'	
-n = Value at POR	'1' = Bit is set	'0' = Bit is cleared	x = Bit is unknown

bit 7 **VDIRMAG:** Voltage Direction Magnitude Select bit
1 = Event occurs when voltage equals or exceeds trip point (HLVDL<3:0>)
0 = Event occurs when voltage equals or falls below trip point (HLVDL<3:0>)

bit 6 **BGVST:** Band Gap Reference Voltages Stable Status Flag bit
1 = Internal band gap voltage references are stable
0 = Internal band gap voltage reference is not stable

bit 5 **IRVST:** Internal Reference Voltage Stable Flag bit
1 = Indicates that the voltage detect logic will generate the interrupt flag at the specified voltage range
0 = Indicates that the voltage detect logic will not generate the interrupt flag at the specified voltage range and the HLVD interrupt should not be enabled

bit 4 **HLVDEN:** High/Low-Voltage Detect Power Enable bit
1 = HLVD enabled
0 = HLVD disabled

bit 3-0 **HLVDL<3:0>:** Voltage Detection Level bits(1)
1111 = External analog input is used (input comes from the HLVDIN pin)
1110 = Maximum setting
.
.
.
0000 = Minimum setting

Note 1: See Table 27-5 for specifications.

The module is enabled by setting the HLVDEN bit (HLVDCON<4>). Each time the HLVD module is enabled, the circuitry requires some time to stabilize. The IRVST bit (HLVDCON<5>) is a read-only bit used to indicate when the circuit is stable. The module can only generate an interrupt after the circuit is stable and IRVST is set.

The VDIRMAG bit (HLVDCON<7>) determines the overall operation of the module. When VDIRMAG is cleared, the module monitors for drops in V_{DD} below a predetermined set point. When the bit is set, the module monitors for rises in V_{DD} above the set point.

23.2 Operation

When the HLVD module is enabled, a comparator uses an internally generated reference voltage as the set point. The set point is compared with the trip point, where each node in the resistor divider represents a trip point voltage. The “trip point” voltage is the voltage level at which the device detects a high or low-voltage event, depending on the configuration of the module.

When the supply voltage is equal to the trip point, the voltage tapped off of the resistor array is equal to the internal reference voltage generated by the voltage reference module. The comparator then generates an interrupt signal by setting the HLVDIF bit.

The trip point voltage is software programmable to any of 16 values. The trip point is selected by programming the HLVDL<3:0> bits (HLVDCON<3:0>).

The HLVD module has an additional feature that allows the user to supply the trip voltage to the module from an external source. This mode is enabled when bits, HLVDL<3:0>, are set to ‘1111’. In this state, the comparator input is multiplexed from the external input pin, HLVDIN. This gives users the flexibility of configuring the High/Low-Voltage Detect interrupt to occur at any voltage in the valid operating range.

FIGURE 23-1: HLVD MODULE BLOCK DIAGRAM (WITH EXTERNAL INPUT)

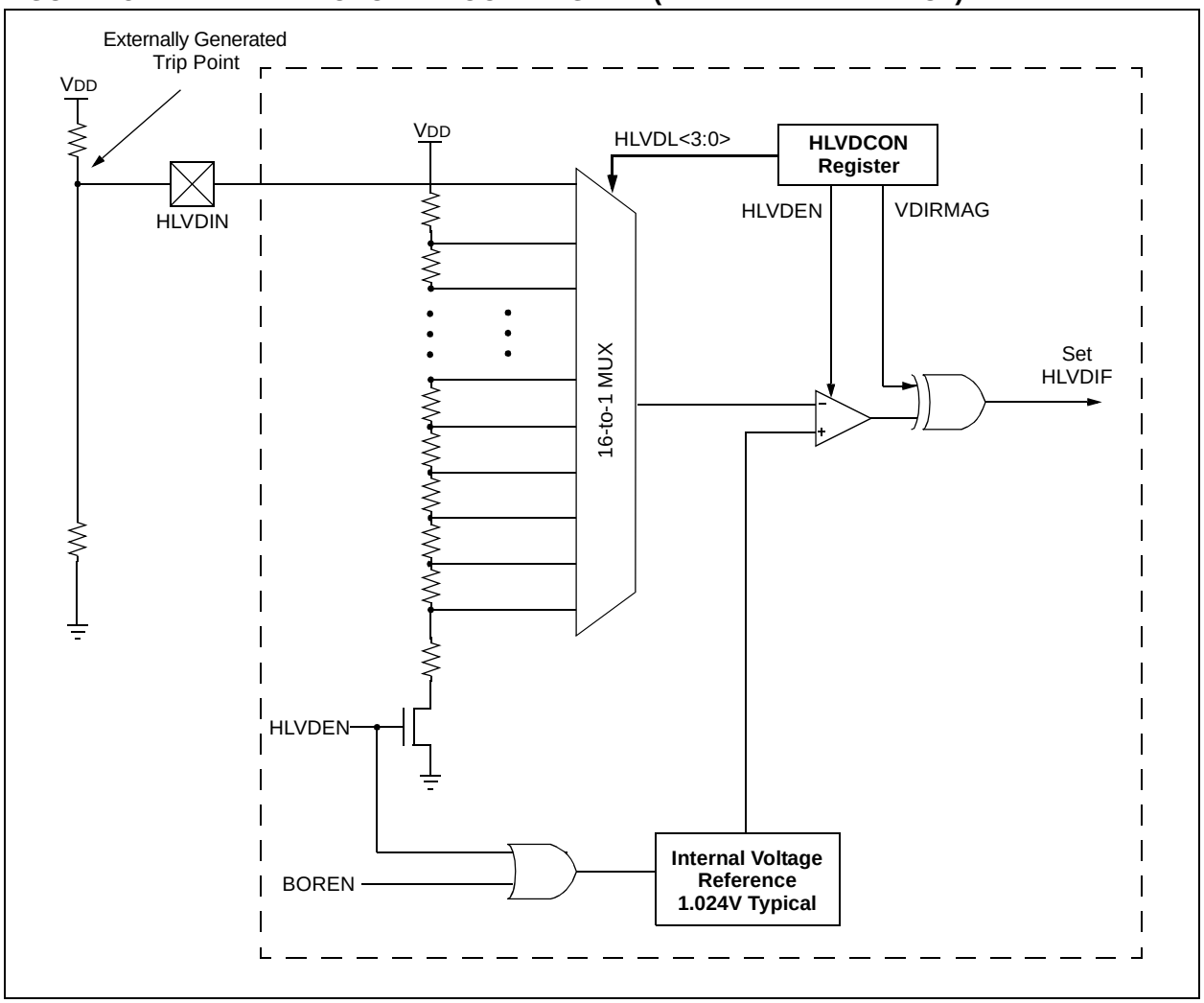

© 2010-2016 Microchip Technology Inc.

23.3 HLVD Setup

To set up the HLVD module:

1. Select the desired HLVD trip point by writing the value to the HLVDL<3:0> bits.
2. Set the VDIRMAG bit to detect high voltage (VDIRMAG = 1) or low voltage (VDIRMAG = 0).
3. Enable the HLVD module by setting the HLVDEN bit.
4. Clear the HLVD interrupt flag (PIR2<2>), which may have been set from a previous interrupt.
5. If interrupts are desired, enable the HLVD interrupt by setting the HLVDIE and GIE/GIEH bits (PIE2<2> and INTCON<7>, respectively).

   An interrupt will not be generated until the IRVST bit is set.

Note:	Before changing any module settings (VDIRMAG, HLVDL<3:0>), first disable the module (HLVDEN = 0), make the changes and re-enable the module. This prevents the generation of false HLVD events.

23.4 Current Consumption

When the module is enabled, the HLVD comparator and voltage divider are enabled and consume static current. The total current consumption, when enabled, is specified in **Section 27.0 "Electrical Specifications"**. Depending on the application, the HLVD module does not need to operate constantly. To reduce current requirements, the HLVD circuitry may only need to be enabled for short periods where the voltage is checked. After such a check, the module could be disabled.

23.5 HLVD Start-up Time

The internal reference voltage of the HLVD module, specified in **Section 27.0 "Electrical Specifications"**, may be used by other internal circuitry, such as the programmable Brown-out Reset. If the HLVD or other circuits using the voltage reference are disabled to lower the device's current consumption, the reference voltage circuit will require time to become stable before a low or high-voltage condition can be reliably detected. This start-up time, TIRVST, is an interval that is independent of device clock speed.

The HLVD interrupt flag is not enabled until TIRVST has expired and a stable reference voltage is reached. For this reason, brief excursions beyond the set point may not be detected during this interval (see Figure 23-2 or Figure 23-3).

FIGURE 23-2: LOW-VOLTAGE DETECT OPERATION (VDIRMAG = 0)

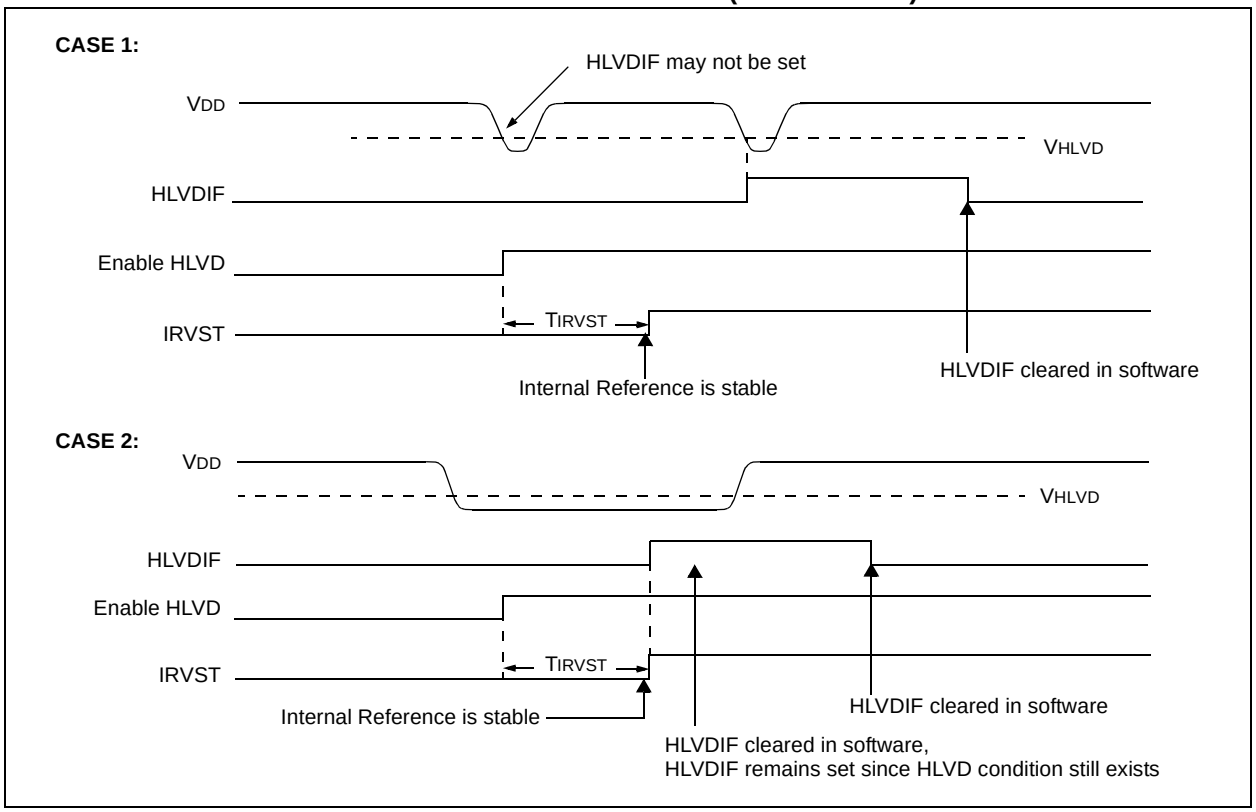

© 2010-2016 Microchip Technology Inc.

FIGURE 23-3: HIGH-VOLTAGE DETECT OPERATION (VDIRMAG = 1)

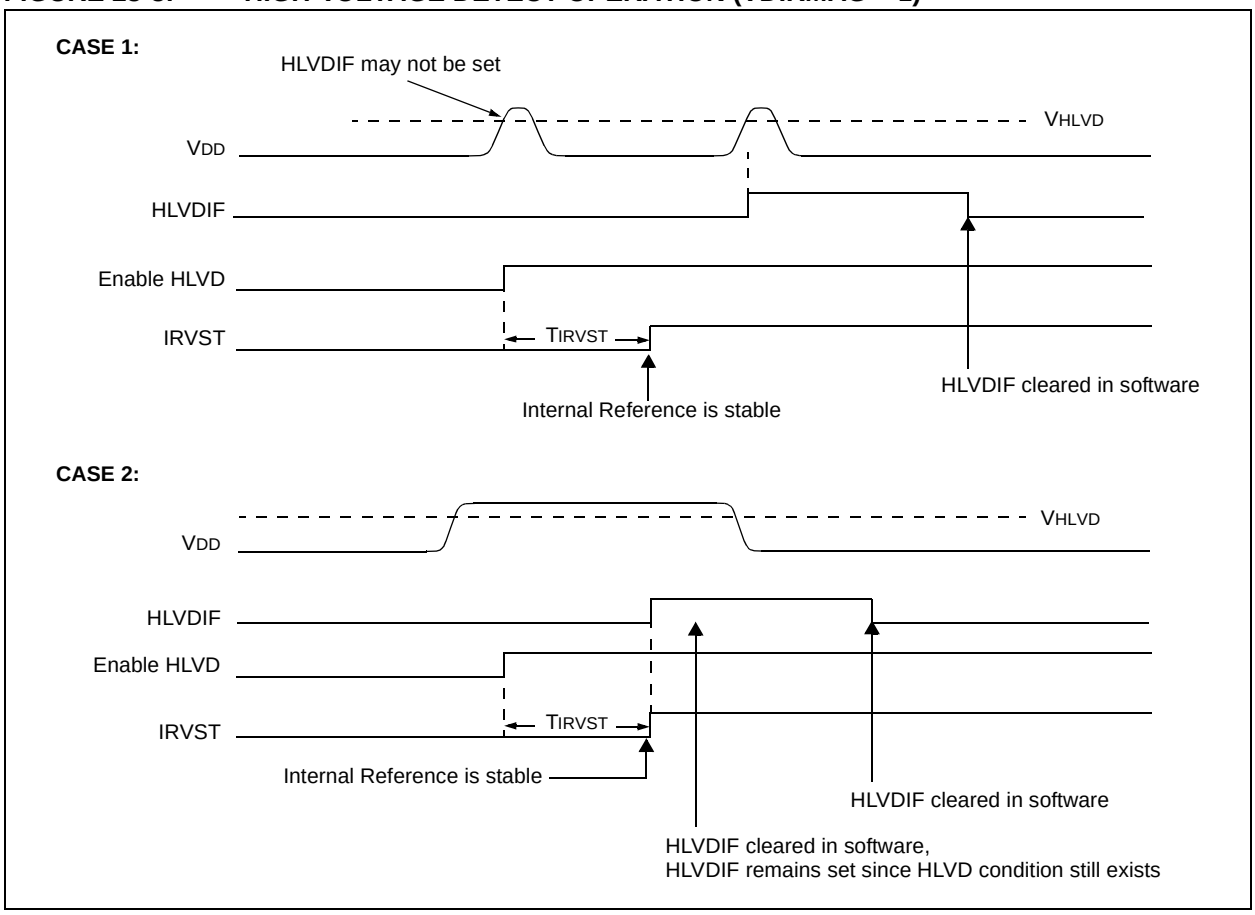

23.6 Applications

In many applications, it is desirable to detect a drop below, or rise above, a particular voltage threshold. For example, the HLVD module could be periodically enabled to detect Universal Serial Bus (USB) attach or detach. This assumes the device is powered by a lower voltage source than the USB when detached. An attach would indicate a high-voltage detect from, for example, 3.3V to 5V (the voltage on USB) and vice versa for a detach. This feature could save a design a few extra components and an attach signal (input pin).

For general battery applications, Figure 23-4 shows a possible voltage curve. Over time, the device voltage decreases. When the device voltage reaches voltage V_A, the HLVD logic generates an interrupt at time, T_A. The interrupt could cause the execution of an ISR, which would allow the application to perform “house-keeping tasks” and a controlled shutdown before the device voltage exits the valid operating range at T_B. This would give the application a time window, represented by the difference between T_A and T_B, to safely exit.

FIGURE 23-4: TYPICAL LOW-VOLTAGE DETECT APPLICATION

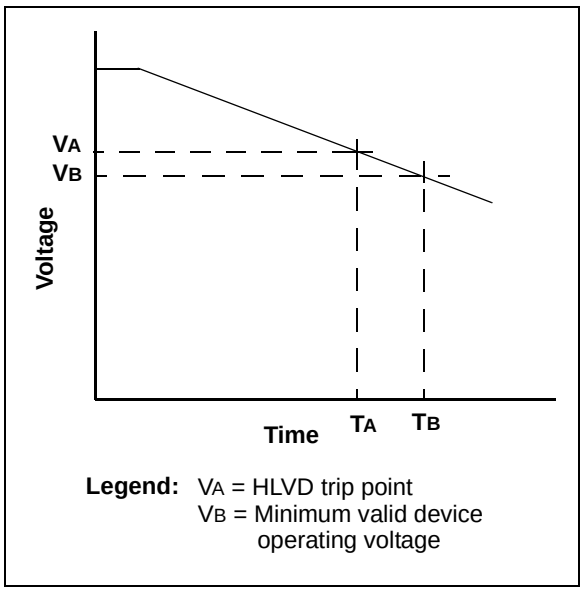

23.7 Operation During Sleep

When enabled, the HLVD circuitry continues to operate during Sleep. If the device voltage crosses the trip point, the HLVDIF bit will be set and the device will wake-up from Sleep. Device execution will continue from the interrupt vector address if interrupts have been globally enabled.

23.8 Effects of a Reset

A device Reset forces all registers to their Reset state. This forces the HLVD module to be turned off.

TABLE 23-1: REGISTERS ASSOCIATED WITH HIGH/LOW-VOLTAGE DETECT MODULE

Name	Bit 7	Bit 6	Bit 5	Bit 4	Bit 3	Bit 2	Bit 1	Bit 0	Reset Values on page
HLVDCON	VDIRMAG	BGVST	IRVST	HLVDEN	HLVDL<3:0>				337
INTCON	GIE/GIEH	PEIE/GIEL	TMR0IE	INT0IE	RBIE	TMR0IF	INT0IF	RBIF	109
IPR2	OSCFIP	C1IP	C2IP	EEIP	BCL1IP	HLVDIP	TMR3IP	CCP2IP	122
PIE2	OSCFIE	C1IE	C2IE	EEIE	BCL1IE	HLVDIE	TMR3IE	CCP2IE	118
PIR2	OSCFIF	C1IF	C2IF	EEIF	BCL1IF	HLVDIF	TMR3IF	CCP2IF	113
TRISA	TRISA7	TRISA6	TRISA5	TRISA4	TRISA3	TRISA2	TRISA1	TRISA0	151

Legend: — = unimplemented locations, read as '0'. Shaded bits are unused by the HLVD module.

© 2010-2016 Microchip Technology Inc.

24.0 SPECIAL FEATURES OF THE CPU

PIC18(L)F2X/4XK22 devices include several features intended to maximize reliability and minimize cost through elimination of external components. These are:

- Oscillator Selection
- Resets:
  - Power-on Reset (POR)
  - Power-up Timer (PWRT)
  - Oscillator Start-up Timer (OST)
  - Brown-out Reset (BOR)
- Interrupts
- Watchdog Timer (WDT)
- Code Protection
- ID Locations
- In-Circuit Serial Programming™

The oscillator can be configured for the application depending on frequency, power, accuracy and cost. All of the options are discussed in detail in **Section 2.0 "Oscillator Module (With Fail-Safe Clock Monitor)"**.

A complete discussion of device Resets and interrupts is available in previous sections of this data sheet.

In addition to their Power-up and Oscillator Start-up Timers provided for Resets, PIC18(L)F2X/4XK22 devices have a Watchdog Timer, which is either permanently enabled via the Configuration bits or software controlled (if configured as disabled).

The inclusion of an internal RC oscillator also provides the additional benefits of a Fail-Safe Clock Monitor (FSCM) and Two-Speed Start-up. FSCM provides for background monitoring of the peripheral clock and automatic switchover in the event of its failure. Two-Speed Start-up enables code to be executed almost immediately on start-up, while the primary clock source completes its start-up delays.

All of these features are enabled and configured by setting the appropriate Configuration register bits.

24.1 Configuration Bits

The Configuration bits can be programmed (read as '0') or left unprogrammed (read as '1') to select various device configurations. These bits are mapped starting at program memory location 300000h.

The user will note that address 300000h is beyond the user program memory space. In fact, it belongs to the configuration memory space (300000h-3FFFFFh), which can only be accessed using table reads and table writes.

Programming the Configuration registers is done in a manner similar to programming the Flash memory. The WR bit in the EECON1 register starts a self-timed write to the Configuration register. In Normal operation mode, a TBLWT instruction with the TBLPTR pointing to the Configuration register sets up the address and the data for the Configuration register write. Setting the WR bit starts a long write to the Configuration register. The Configuration registers are written a byte at a time. To write or erase a configuration cell, a TBLWT instruction can write a '1' or a '0' into the cell. For additional details on Flash programming, refer to **Section 6.6 "Writing to Flash Program Memory"**.

TABLE 24-1: CONFIGURATION BITS AND DEVICE IDs

Address	Name	Bit 7	Bit 6	Bit 5	Bit 4	Bit 3	Bit 2	Bit 1	Bit 0	Default/ Unprogrammed Value
300000h	CONFIG1L	—	—	—	—	—	—	—	—	0000 0000
300001h	CONFIG1H	IESO	FCMEN	PRICLKEN	PLLCFG	FOSC<3:0>				0010 0101
300002h	CONFIG2L	—	—	—	BORV<1:0>		BOREN<1:0>		$\overline{\text{PWRTEN}}$	0001 1111
300003h	CONFIG2H	—	—	WDPS<3:0>				WDTEN<1:0>		0011 1111
300004h	CONFIG3L	—	—	—	—	—	—	—	—	0000 0000
300005h	CONFIG3H	MCLRE	—	P2BMX	T3CMX	HFOFST	CCP3MX	PBADEN	CCP2MX	1011 1111
300006h	CONFIG4L	$\overline{\text{DEBUG}}$	XINST	—	—	—	LVP(1)	—	STRVEN	1000 0101
300007h	CONFIG4H	—	—	—	—	—	—	—	—	1111 1111
300008h	CONFIG5L	—	—	—	—	CP3(2)	CP2(2)	CP1	CP0	0000 1111
300009h	CONFIG5H	CPD	CPB	—	—	—	—	—	—	1100 0000
30000Ah	CONFIG6L	—	—	—	—	WRT3(2)	WRT2(2)	WRT1	WRT0	0000 1111
30000Bh	CONFIG6H	WRTD	WRTB	WRTC(3)	—	—	—	—	—	1110 0000
30000Ch	CONFIG7L	—	—	—	—	EBTR3(2)	EBTR2(2)	EBTR1	EBTR0	0000 1111
30000Dh	CONFIG7H	—	EBTRB	—	—	—	—	—	—	0100 0000
3FFFFEh	DEVID1(4)	DEV<2:0>			REV<4:0>					qqqq qqqq
3FFFFFh	DEVID2(4)	DEV<10:3>								0101 qqqq

Legend: – = unimplemented, q = value depends on condition. Shaded bits are unimplemented, read as '0'.

Note 1: Can only be changed when in high voltage programming mode.

2: Available on PIC18(L)FX5K22 and PIC18(L)FX6K22 devices only.

3: In user mode, this bit is read-only and cannot be self-programmed.

4: See Register 24-12 and Register 24-13 for DEVID values. DEVID registers are read-only and cannot be programmed by the user.

© 2010-2016 Microchip Technology Inc.

24.2 Register Definitions: Configuration Word

REGISTER 24-1: CONFIG1H: CONFIGURATION REGISTER 1 HIGH

R/P-0	R/P-0	R/P-1	R/P-0	R/P-0	R/P-1	R/P-0	R/P-1
IESO	FCMEN	PRICLKEN	PLLCFG	FOSC<3:0>			
bit 7							bit 0

Legend:		
R = Readable bit	P = Programmable bit	U = Unimplemented bit, read as ‘0’
-n = Value when device is unprogrammed		x = Bit is unknown

bit 7 **IESO(1):** Internal/External Oscillator Switchover bit
`1` = Oscillator Switchover mode enabled
`0` = Oscillator Switchover mode disabled

bit 6 **FCMEN(1):** Fail-Safe Clock Monitor Enable bit
`1` = Fail-Safe Clock Monitor enabled
`0` = Fail-Safe Clock Monitor disabled

bit 5 **PRICLKEN:** Primary Clock Enable bit
`1` = Primary Clock is always enabled
`0` = Primary Clock can be disabled by software

bit 4 **PLLCFG:** 4 x PLL Enable bit
`1` = 4 x PLL always enabled, Oscillator multiplied by 4
`0` = 4 x PLL is under software control, PLLEN (OSCTUNE<6>)

bit 3-0 **FOSC<3:0>:** Oscillator Selection bits
`1111` = External RC oscillator, CLKOUT function on RA6
`1110` = External RC oscillator, CLKOUT function on RA6
`1101` = EC oscillator **(low power, ≤500 kHz)**
`1100` = EC oscillator, CLKOUT function on OSC2 **(low power, ≤500 kHz)**
`1011` = EC oscillator **(medium power, 500 kHz-16 MHz)**
`1010` = EC oscillator, CLKOUT function on OSC2 **(medium power, 500 kHz-16 MHz)**
`1001` = Internal oscillator block, CLKOUT function on OSC2
`1000` = Internal oscillator block
`0111` = External RC oscillator
`0110` = External RC oscillator, CLKOUT function on OSC2
`0101` = EC oscillator **(high power, >16 MHz)**
`0100` = EC oscillator, CLKOUT function on OSC2 **(high power, >16 MHz)**
`0011`= HS oscillator **(medium power, 4 MHz-16 MHz)**
`0010`= HS oscillator **(high power, >16 MHz)**
`0001`= XT oscillator
`0000`= LP oscillator

Note 1: When FOSC<3:0> is configured for HS, XT, or LP oscillator and FCMEN bit is set, then the IESO bit should also be set to prevent a false failed clock indication and to enable automatic clock switch over from the internal oscillator block to the external oscillator when the OST times out.

REGISTER 24-2: CONFIG2L: CONFIGURATION REGISTER 2 LOW

U-0	U-0	U-0	R/P-1	R/P-1	R/P-1	R/P-1	R/P-1
—	—	—	BORV<1:0>(1)		BOREN<1:0>(2)		$\overline{\text{PWRTEN}}$(2)
bit 7							bit 0

Legend:		
R = Readable bit	P = Programmable bit	U = Unimplemented bit, read as ‘0’
-n = Value when device is unprogrammed		x = Bit is unknown

bit 7-5 **Unimplemented:** Read as ‘0’

bit 4-3 **BORV<1:0>:** Brown-out Reset Voltage bits(1)
11 = VBOR set to 1.9V nominal
10 = VBOR set to 2.2V nominal
01 = VBOR set to 2.5V nominal
00 = VBOR set to 2.85V nominal

bit 2-1 **BOREN<1:0>:** Brown-out Reset Enable bits(2)
11 = Brown-out Reset enabled in hardware only (SBOREN is disabled)
10 = Brown-out Reset enabled in hardware only and disabled in Sleep mode (SBOREN is disabled)
01 = Brown-out Reset enabled and controlled by software (SBOREN is enabled)
00 = Brown-out Reset disabled in hardware and software

bit 0 **$\overline{\text{PWRTEN}}$:** Power-up Timer Enable bit(2)
1 = PWRT disabled
0 = PWRT enabled

Note 1: See **Section 27.1 “DC Characteristics: Supply Voltage, PIC18(L)F2X/4XK22”** for specifications.
2: The Power-up Timer is decoupled from Brown-out Reset, allowing these features to be independently controlled.

© 2010-2016 Microchip Technology Inc.

REGISTER 24-3: CONFIG2H: CONFIGURATION REGISTER 2 HIGH

U-0	U-0	R/P-1	R/P-1	R/P-1	R/P-1	R/P-1	R/P-1
—	—	WDTPS<3:0>				WDTEN<1:0>	
bit 7							bit 0

Legend:		
R = Readable bit	P = Programmable bit	U = Unimplemented bit, read as ‘0’
-n = Value when device is unprogrammed		x = Bit is unknown

bit 7-6 **Unimplemented:** Read as ‘0’

bit 5-2 **WDTPS<3:0>:** Watchdog Timer Postscale Select bits
1111 = 1:32,768
1110 = 1:16,384
1101 = 1:8,192
1100 = 1:4,096
1011 = 1:2,048
1010 = 1:1,024
1001 = 1:512
1000 = 1:256
0111 = 1:128
0110 = 1:64
0101 = 1:32
0100 = 1:16
0011 = 1:8
0010 = 1:4
0001 = 1:2
0000 = 1:1

bit 1-0 **WDTEN<1:0>:** Watchdog Timer Enable bits
11 = WDT enabled in hardware; SWDTEN bit disabled
10 = WDT controlled by the SWDTEN bit
01 = WDT enabled when device is active, disabled when device is in Sleep; SWDTEN bit disabled
00 = WDT disabled in hardware; SWDTEN bit disabled

REGISTER 24-4: CONFIG3H: CONFIGURATION REGISTER 3 HIGH

R/P-1	U-0	R/P-1	R/P-1	R/P-1	R/P-1	R/P-1	R/P-1
MCLRE	—	P2BMX	T3CMX	HFOFST	CCP3MX	PBADEN	CCP2MX
bit 7							bit 0

Legend:		
R = Readable bit	P = Programmable bit	U = Unimplemented bit, read as ‘0’
-n = Value when device is unprogrammed		x = Bit is unknown

bit 7 **MCLRE:** $\overline{\text{MCLR}}$ Pin Enable bit
1 = $\overline{\text{MCLR}}$ pin enabled; RE3 input pin disabled
0 = RE3 input pin enabled; $\overline{\text{MCLR}}$ disabled

bit 6 **Unimplemented:** Read as ‘0’

bit 5 **P2BMX:** P2B Input MUX bit
1 = P2B is on RB5(1)
P2B is on RD2(2)
0 = P2B is on RC0

bit 4 **T3CMX:** Timer3 Clock Input MUX bit
1 = T3CKI is on RC0
0 = T3CKI is on RB5

bit 3 **HFOFST:** HFINTOSC Fast Start-up bit
1 = HFINTOSC starts clocking the CPU without waiting for the oscillator to stabilize
0 = The system clock is held off until the HFINTOSC is stable

bit 2 **CCP3MX:** CCP3 MUX bit
1 = CCP3 input/output is multiplexed with RB5
0 = CCP3 input/output is multiplexed with RC6(1)
CCP3 input/output is multiplexed with RE0(2)

bit 1 **PBADEN:** PORTB A/D Enable bit
1 = ANSELB<5:0> resets to 1, PORTB<5:0> pins are configured as analog inputs on Reset
0 = ANSELB<5:0> resets to 0, PORTB<4:0> pins are configured as digital I/O on Reset

bit 0 **CCP2MX:** CCP2 MUX bit
1 = CCP2 input/output is multiplexed with RC1
0 = CCP2 input/output is multiplexed with RB3

Note 1: PIC18(L)F2XK22 devices only.
2: PIC18(L)F4XK22 devices only.

© 2010-2016 Microchip Technology Inc.

REGISTER 24-5: CONFIG4L: CONFIGURATION REGISTER 4 LOW

R/P-1	R/P-0	U-0	U-0	U-0	R/P-1	U-0	R/P-1
$\overline{\text{DEBUG}}$(2)	XINST	—	—	—	LVP(1)	—	STVREN
bit 7							bit 0

Legend:		
R = Readable bit	P = Programmable bit	U = Unimplemented bit, read as ‘0’
-n = Value when device is unprogrammed		x = Bit is unknown

bit 7 **$\overline{\text{DEBUG}}$:** Background Debugger Enable bit(2)
1 = Background debugger disabled, RB6 and RB7 configured as general purpose I/O pins
0 = Background debugger enabled, RB6 and RB7 are dedicated to In-Circuit Debug

bit 6 **XINST:** Extended Instruction Set Enable bit
1 = Instruction set extension and Indexed Addressing mode enabled
0 = Instruction set extension and Indexed Addressing mode disabled (Legacy mode)

bit 5-3 **Unimplemented:** Read as ‘0’

bit 2 **LVP:** Single-Supply ICSP Enable bit
1 = Single-Supply ICSP enabled
0 = Single-Supply ICSP disabled

bit 1 **Unimplemented:** Read as ‘0’

bit 0 **STVREN:** Stack Full/Underflow Reset Enable bit
1 = Stack full/underflow will cause Reset
0 = Stack full/underflow will not cause Reset

Note 1: Can only be changed by a programmer in high-voltage programming mode.
2: The $\overline{\text{DEBUG}}$ bit is managed automatically by device development tools including debuggers and programmers. For normal device operations, this bit should be maintained as a ‘1’.

REGISTER 24-6: CONFIG5L: CONFIGURATION REGISTER 5 LOW

U-0	U-0	U-0	U-0	R/C-1	R/C-1	R/C-1	R/C-1
—	—	—	—	CP3(1)	CP2(1)	CP1	CP0
bit 7							bit 0

Legend:	
R = Readable bit	U = Unimplemented bit, read as ‘0’
-n = Value when device is unprogrammed	C = Clearable only bit

bit 7-4 **Unimplemented:** Read as ‘0’

bit 3 **CP3:** Code Protection bit(1)
1 = Block 3 not code-protected
0 = Block 3 code-protected

bit 2 **CP2:** Code Protection bit(1)
1 = Block 2 not code-protected
0 = Block 2 code-protected

bit 1 **CP1:** Code Protection bit
1 = Block 1 not code-protected
0 = Block 1 code-protected

bit 0 **CP0:** Code Protection bit
1 = Block 0 not code-protected
0 = Block 0 code-protected

Note 1: Available on PIC18(L)FX5K22 and PIC18(L)FX6K22 devices.

REGISTER 24-7: CONFIG5H: CONFIGURATION REGISTER 5 HIGH

R/C-1	R/C-1	U-0	U-0	U-0	U-0	U-0	U-0
CPD	CPB	—	—	—	—	—	—
bit 7							bit 0

Legend:	
R = Readable bit	U = Unimplemented bit, read as ‘0’
-n = Value when device is unprogrammed	C = Clearable only bit

bit 7 **CPD:** Data EEPROM Code Protection bit
1 = Data EEPROM not code-protected
0 = Data EEPROM code-protected

bit 6 **CPB:** Boot Block Code Protection bit
1 = Boot Block not code-protected
0 = Boot Block code-protected

bit 5-0 **Unimplemented:** Read as ‘0’

REGISTER 24-8: CONFIG6L: CONFIGURATION REGISTER 6 LOW

U-0	U-0	U-0	U-0	R/C-1	R/C-1	R/C-1	R/C-1
—	—	—	—	WRT3(1)	WRT2(1)	WRT1	WRT0
bit 7							bit 0

Legend:	
R = Readable bit	U = Unimplemented bit, read as ‘0’
-n = Value when device is unprogrammed	C = Clearable only bit

bit 7-4 **Unimplemented:** Read as ‘0’

bit 3 **WRT3:** Write Protection bit(1)
1 = Block 3 not write-protected
0 = Block 3 write-protected

bit 2 **WRT2:** Write Protection bit(1)
1 = Block 2 not write-protected
0 = Block 2 write-protected

bit 1 **WRT1:** Write Protection bit
1 = Block 1 not write-protected
0 = Block 1 write-protected

bit 0 **WRT0:** Write Protection bit
1 = Block 0 not write-protected
0 = Block 0 write-protected

Note 1: Available on PIC18(L)FX5K22 and PIC18(L)FX6K22 devices.

© 2010-2016 Microchip Technology Inc.

REGISTER 24-9: CONFIG6H: CONFIGURATION REGISTER 6 HIGH

R/C-1	R/C-1	R-1	U-0	U-0	U-0	U-0	U-0
WRTD	WRTB	WRTC(1)	—	—	—	—	—
bit 7							bit 0

Legend:	
R = Readable bit	U = Unimplemented bit, read as ‘0’
-n = Value when device is unprogrammed	C = Clearable only bit

bit 7 **WRTD:** Data EEPROM Write Protection bit
1 = Data EEPROM not write-protected
0 = Data EEPROM write-protected

bit 6 **WRTB:** Boot Block Write Protection bit
1 = Boot Block not write-protected
0 = Boot Block write-protected

bit 5 **WRTC:** Configuration Register Write Protection bit(1)
1 = Configuration registers not write-protected
0 = Configuration registers write-protected

bit 4-0 **Unimplemented:** Read as ‘0’

Note 1: This bit is read-only in normal execution mode; it can be written only in Program mode.

REGISTER 24-10: CONFIG7L: CONFIGURATION REGISTER 7 LOW

U-0	U-0	U-0	U-0	R/C-1	R/C-1	R/C-1	R/C-1
—	—	—	—	EBTR3(1)	EBTR2(1)	EBTR1	EBTR0
bit 7							bit 0

Legend:	
R = Readable bit	U = Unimplemented bit, read as ‘0’
-n = Value when device is unprogrammed	C = Clearable only bit

bit 7-4 **Unimplemented:** Read as ‘0’

bit 3 **EBTR3:** Table Read Protection bit(1)
1 = Block 3 not protected from table reads executed in other blocks
0 = Block 3 protected from table reads executed in other blocks

bit 2 **EBTR2**: Table Read Protection bit(1)
1 = Block 2 not protected from table reads executed in other blocks
0 = Block 2 protected from table reads executed in other blocks

bit 1 **EBTR1:** Table Read Protection bit
1 = Block 1 not protected from table reads executed in other blocks
0 = Block 1 protected from table reads executed in other blocks

bit 0 **EBTR0:** Table Read Protection bit
1 = Block 0 not protected from table reads executed in other blocks
0 = Block 0 protected from table reads executed in other blocks

Note 1: Available on PIC18(L)FX5K22 and PIC18(L)FX6K22s devices.

REGISTER 24-11: CONFIG7H: CONFIGURATION REGISTER 7 HIGH

U-0	R/C-1	U-0	U-0	U-0	U-0	U-0	U-0
—	EBTRB	—	—	—	—	—	—
bit 7							bit 0

Legend:	
R = Readable bit	U = Unimplemented bit, read as ‘0’
-n = Value when device is unprogrammed	C = Clearable only bit

bit 7 **Unimplemented:** Read as ‘0’

bit 6 **EBTRB:** Boot Block Table Read Protection bit
1 = Boot Block not protected from table reads executed in other blocks
0 = Boot Block protected from table reads executed in other blocks

bit 5-0 **Unimplemented:** Read as ‘0’

REGISTER 24-12: DEVID1: DEVICE ID REGISTER 1

R	R	R	R	R	R	R	R
DEV2	DEV1	DEV0	REV4	REV3	REV2	REV1	REV0
bit 7							bit 0

Legend:	
R = Readable bit	U = Unimplemented bit, read as ‘0’
-n = Value when device is unprogrammed	C = Clearable only bit

bit 7-5 **DEV<2:0>:** Device ID bits
These bits, together with DEV<10:3> in DEVID2, determine the device ID.
See Table 24-2 for complete Device ID list.

bit 4-0 **REV<4:0>:** Revision ID bits
These bits indicate the device revision.

REGISTER 24-13: DEVID2: DEVICE ID REGISTER 2

R	R	R	R	R	R	R	R
DEV10	DEV9	DEV8	DEV7	DEV6	DEV5	DEV4	DEV3
bit 7							bit 0

Legend:	
R = Readable bit	U = Unimplemented bit, read as ‘0’
-n = Value when device is unprogrammed	C = Clearable only bit

bit 7-0 **DEV<10:3>:** Device ID bits
These bits, together with DEV<2:0> in DEVID1, determine the device ID.
See Table 24-2 for complete Device ID list.

© 2010-2016 Microchip Technology Inc.

TABLE 24-2: DEVICE ID TABLE FOR THE PIC18(L)F2X/4XK22 FAMILY

DEV<10:3>	DEV<2:0>	Part Number
0101 0100	000	PIC18F46K22
	001	PIC18LF46K22
	010	PIC18F26K22
	011	PIC18LF26K22
0101 0101	000	PIC18F45K22
	001	PIC18LF45K22
	010	PIC18F25K22
	011	PIC18LF25K22
0101 0110	000	PIC18F44K22
	001	PIC18LF44K22
	010	PIC18F24K22
	011	PIC18LF24K22
0101 0111	000	PIC18F43K22
	001	PIC18LF43K22
	010	PIC18F23K22
	011	PIC18LF23K22

24.3 Watchdog Timer (WDT)

For PIC18(L)F2X/4XK22 devices, the WDT is driven by the LFINTOSC source. When the WDT is enabled, the clock source is also enabled. The nominal WDT period is 4 ms and has the same stability as the LFINTOSC oscillator.

The 4 ms period of the WDT is multiplied by a 16-bit postscaler. Any output of the WDT postscaler is selected by a multiplexer, controlled by bits in Configuration Register 2H. Available periods range from 4 ms to 131.072 seconds (2.18 minutes). The WDT and postscaler are cleared when any of the following events occur: a `SLEEP` or `CLRWDT` instruction is executed, the IRCF bits of the OSCCON register are changed or a clock failure has occurred.

Note 1: The `CLRWDT` and `SLEEP` instructions clear the WDT and postscaler counts when executed.

2: Changing the setting of the IRCF bits of the OSCCON register clears the WDT and postscaler counts.

3: When a `CLRWDT` instruction is executed, the postscaler count will be cleared.

FIGURE 24-1: WDT BLOCK DIAGRAM

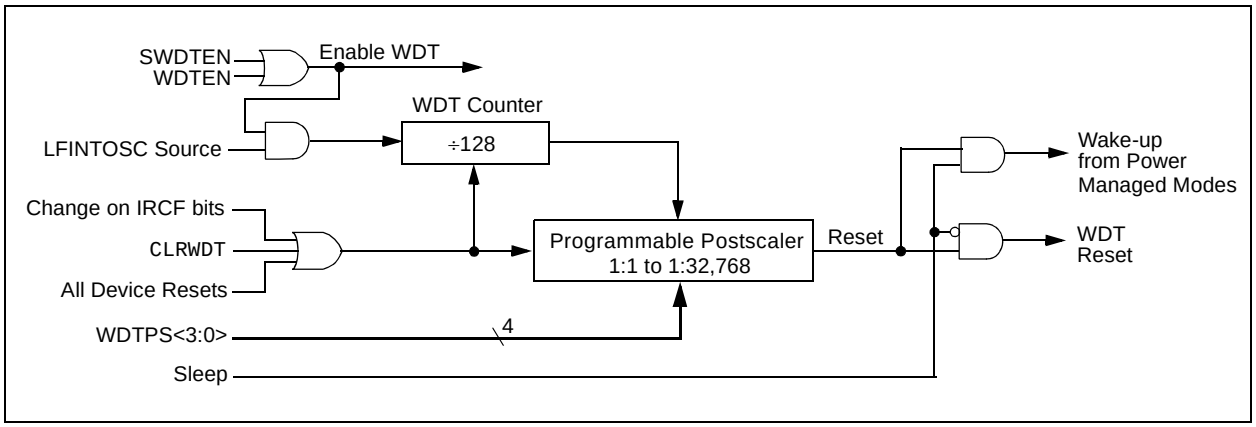

© 2010-2016 Microchip Technology Inc.

24.3.1 CONTROL REGISTER

Register 24-14 shows the WDTCON register. This is a readable and writable register which contains a control bit that allows software to control the WDT when the SWDTEN configuration bits select the software control mode.

24.4 Register Definitions: WDT Control

REGISTER 24-14: WDTCON: WATCHDOG TIMER CONTROL REGISTER

U-0	U-0	U-0	U-0	U-0	U-0	U-0	R/W-0
—	—	—	—	—	—	—	SWDTEN(1)
bit 7							bit 0

Legend:			
R = Readable bit	W = Writable bit	U = Unimplemented bit, read as ‘0’	
-n = Value at POR	‘1’ = Bit is set	‘0’ = Bit is cleared	x = Bit is unknown

bit 7-1 **Unimplemented:** Read as ‘0’

bit 0 **SWDTEN:** Software Enable or Disable the Watchdog Timer bit(1)
1 = WDT is turned on
0 = WDT is turned off (Reset value)

Note 1: This bit has no effect if the Configuration bits WDTEN <1,0> are not equal to '10'.

TABLE 24-3: REGISTERS ASSOCIATED WITH WATCHDOG TIMER

Name	Bit 7	Bit 6	Bit 5	Bit 4	Bit 3	Bit 2	Bit 1	Bit 0	Reset Values on Page
RCON	IPEN	SBOREN	—	$\overline{RI}$	$\overline{TO}$	$\overline{PD}$	$\overline{POR}$	$\overline{BOR}$	56
WDTCON	—	—	—	—	—	—	—	SWDTEN	355

Legend: — = unimplemented, read as ‘0’. Shaded bits are not used by the Watchdog Timer.

TABLE 24-4: CONFIGURATION REGISTERS ASSOCIATED WITH WATCHDOG TIMER

Name	Bit 7	Bit 6	Bit 5	Bit 4	Bit 3	Bit 2	Bit 1	Bit 0	Reset Values on Page
CONFIG2H	—	—	WDPS<3:0>				WDTEN<1:0>		347

Legend: — = unimplemented, read as ‘0’. Shaded bits are not used by the Watchdog Timer.

24.5 Program Verification and Code Protection

The overall structure of the code protection on the PIC18 Flash devices differs significantly from other PIC microcontroller devices.

The user program memory is divided into three or five blocks, depending on the device. One of these is a Boot Block of 0.5K or 2K bytes, depending on the device. The remainder of the memory is divided into individual blocks on binary boundaries.

Each of the blocks has three code protection bits associated with them. They are:

- Code-Protect bit (CPn)
- Write-Protect bit (WRTn)
- External Block Table Read bit (EBTRn)

Figure 24-2 shows the program memory organization for 8, 16 and 32-Kbyte devices and the specific code protection bit associated with each block. The actual locations of the bits are summarized in Table 24-5.

FIGURE 24-2: CODE-PROTECTED PROGRAM MEMORY FOR PIC18(L)F2X/4XK22

MEMORY SIZE/DEVICE				Block Code Protection Controlled By:
8 Kbytes (PIC18(L)FX3K22)	**16 Kbytes (PIC18(L)FX4K22)**	**32 Kbytes (PIC18(L)FX5K22)**	**64 Kbytes (PIC18(L)FX6K22)**	
Boot Block (000h-1FFh)	Boot Block (000h-7FFh)	Boot Block (000h-7FFh)	Boot Block (000h-7FFh)	CPB, WRTB, EBTRB
Block 0 (200h-FFFh)	Block 0 (800h-1FFFh)	Block 0 (800h-1FFFh)	Block 0 (800h-3FFFh)	CP0, WRT0, EBTR0
Block 1 (1000h-1FFFh)	Block 1 (2000h-3FFFh)	Block 1 (2000h-3FFFh)	Block 1 (4000h-7FFFh)	CP1, WRT1, EBTR1
Unimplemented Read ‘0’s (2000h-1FFFFFh)	Unimplemented Read ‘0’s (4000h-1FFFFFh)	Block 2 (4000h-5FFFh)	Block 2 (8000h-BFFFh)	CP2, WRT2, EBTR2
		Block 3 (6000h-7FFFh)	Block 3 (C000h-FFFFh)	CP3, WRT3, EBTR3
		Unimplemented Read ‘0’s (8000h-1FFFFFh)	Unimplemented Read ‘0’s (10000h-1FFFFFh)	(Unimplemented Memory Space)

TABLE 24-5: CONFIGURATION REGISTERS ASSOCIATED WITH CODE PROTECTION

File Name		Bit 7	Bit 6	Bit 5	Bit 4	Bit 3	Bit 2	Bit 1	Bit 0
300008h	CONFIG5L	—	—	—	—	CP3(1)	CP2(1)	CP1	CP0
300009h	CONFIG5H	CPD	CPB	—	—	—	—	—	—
30000Ah	CONFIG6L	—	—	—	—	WRT3(1)	WRT2(1)	WRT1	WRT0
30000Bh	CONFIG6H	WRTD	WRTB	WRTC(2)	—	—	—	—	—
30000Ch	CONFIG7L	—	—	—	—	EBTR3(1)	EBTR2(1)	EBTR1	EBTR0
30000Dh	CONFIG7H	—	EBTRB	—	—	—	—	—	—

Legend: Shaded bits are unimplemented.

Note 1: Available on PIC18(L)FX5K22 and PIC18(L)FX6K22 devices only.

2: In user mode, this bit is read-only and cannot be self-programmed.

© 2010-2016 Microchip Technology Inc.

24.5.1 PROGRAM MEMORY CODE PROTECTION

The program memory may be read to or written from any location using the table read and table write instructions. The device ID may be read with table reads. The Configuration registers may be read and written with the table read and table write instructions.

In Normal execution mode, the CPn bits have no direct effect. CPn bits inhibit external reads and writes. A block of user memory may be protected from table writes if the WRTn Configuration bit is '0'. The EBTRn bits control table reads. For a block of user memory with the EBTRn bit cleared to '0', a table READ instruction that executes from within that block is allowed to read.

A table read instruction that executes from a location outside of that block is not allowed to read and will result in reading '0's. Figures 24-3 through 24-5 illustrate table write and table read protection.

Note: Code protection bits may only be written to a '0' from a '1' state. It is not possible to write a '1' to a bit in the '0' state. Code protection bits are only set to '1' by a full chip erase or block erase function. The full chip erase and block erase functions can only be initiated via ICSP™ or an external programmer.

FIGURE 24-3: TABLE WRITE (WRTn) DISALLOWED

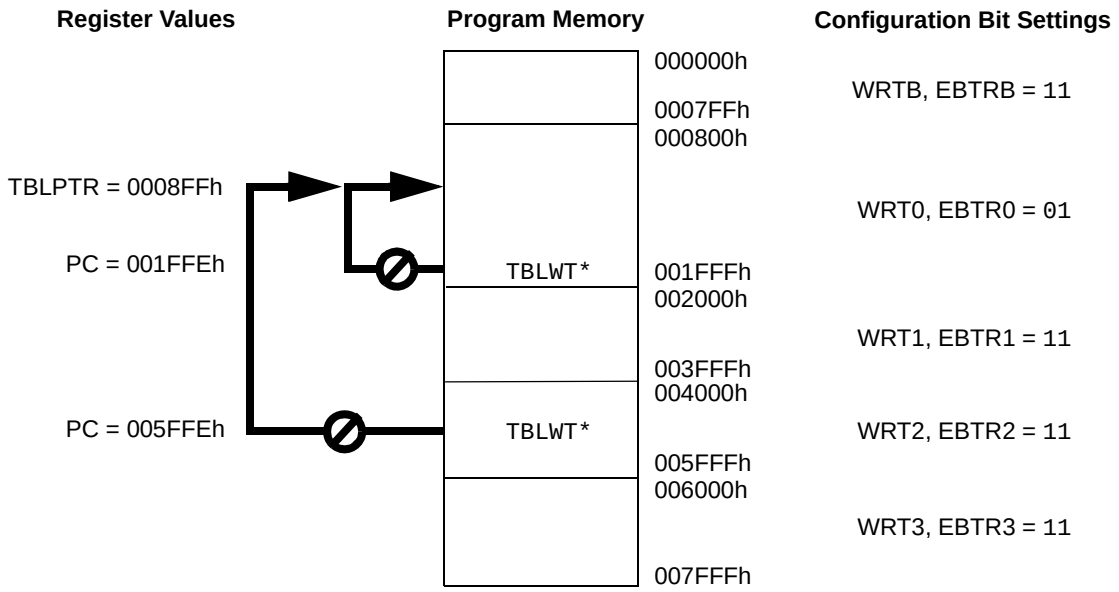

Results: All table writes disabled to Blockn whenever WRTn = 0.

FIGURE 24-4: EXTERNAL BLOCK TABLE READ (EBTRn) DISALLOWED

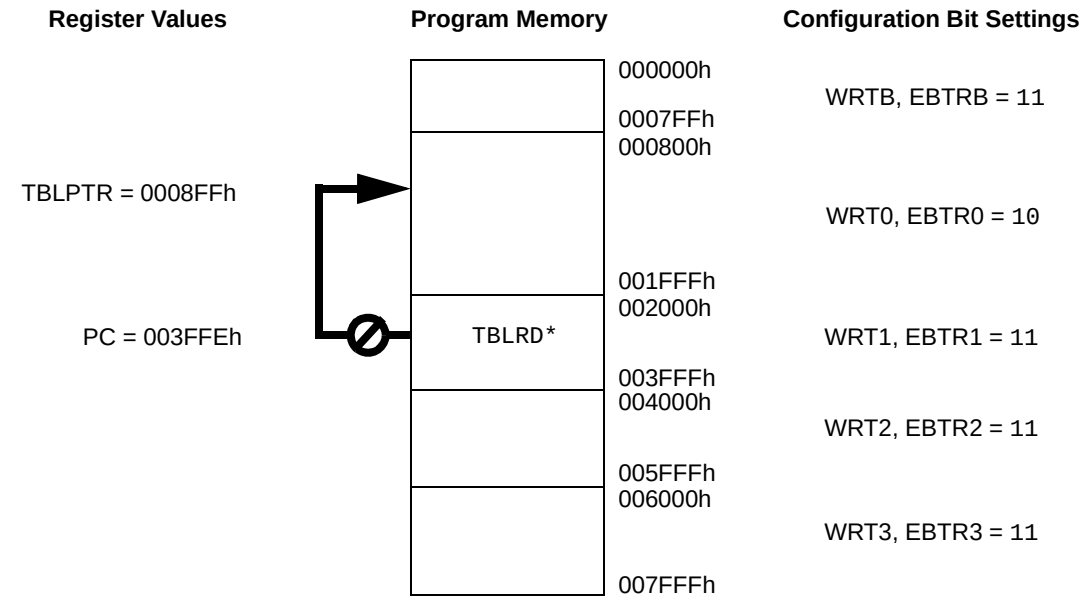

Results: All table reads from external blocks to Blockn are disabled whenever EBTRn = 0.
TABLAT register returns a value of '0'.

FIGURE 24-5: EXTERNAL BLOCK TABLE READ (EBTRn) ALLOWED

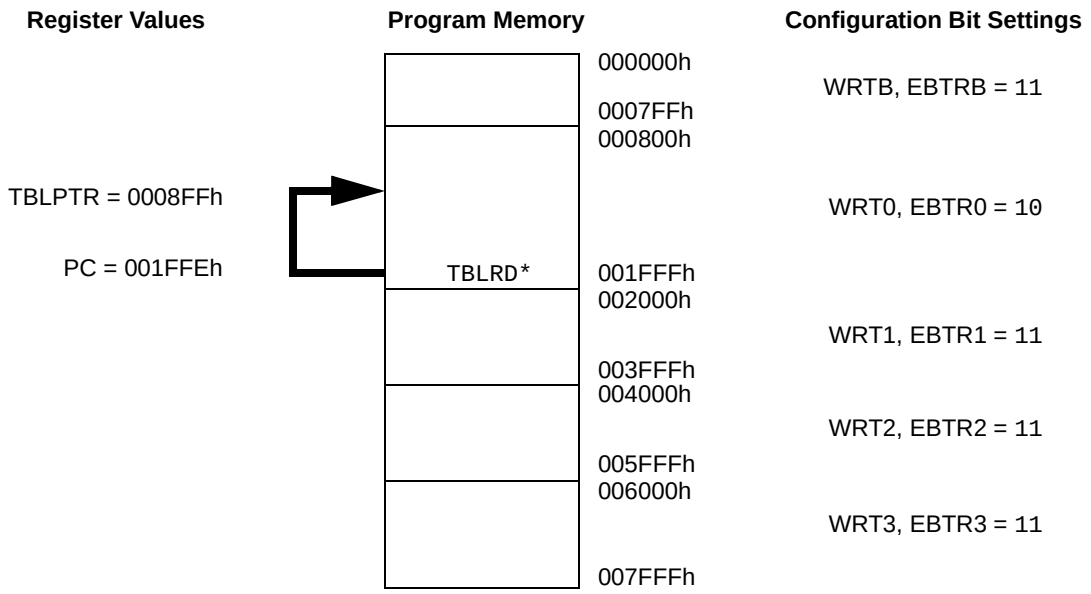

Results: Table reads permitted within Blockn, even when EBTRBn = 0.
TABLAT register returns the value of the data at the location TBLPTR.

© 2010-2016 Microchip Technology Inc.

24.5.2 DATA EEPROM CODE PROTECTION

The entire data EEPROM is protected from external reads and writes by two bits: CPD and WRTD. CPD inhibits external reads and writes of data EEPROM. WRTD inhibits internal and external writes to data EEPROM. The CPU can always read data EEPROM under normal operation, regardless of the protection bit settings.

24.5.3 CONFIGURATION REGISTER PROTECTION

The Configuration registers can be write-protected. The WRTC bit controls protection of the Configuration registers. In Normal execution mode, the WRTC bit is readable only. WRTC can only be written via ICSP or an external programmer.

24.6 ID Locations

Eight memory locations (200000h-200007h) are designated as ID locations, where the user can store checksum or other code identification numbers. These locations are both readable and writable during normal execution through the `TBLRD` and `TBLWT` instructions or during program/verify. The ID locations can be read when the device is code-protected.

24.7 In-Circuit Serial Programming

PIC18(L)F2X/4XK22 devices can be serially programmed while in the end application circuit. This is simply done with two lines for clock and data and three other lines for power, ground and the programming voltage. This allows customers to manufacture boards with unprogrammed devices and then program the microcontroller just before shipping the product. This also allows the most recent firmware or a custom firmware to be programmed.

24.8 In-Circuit Debugger

When the DEBUG Configuration bit is programmed to a '0', the In-Circuit Debugger functionality is enabled. This function allows simple debugging functions when used with MPLAB® IDE. When the microcontroller has this feature enabled, some resources are not available for general use. Table 24-6 shows which resources are required by the background debugger.

TABLE 24-6: DEBUGGER RESOURCES

I/O pins:	RB6, RB7

To use the In-Circuit Debugger function of the microcontroller, the design must implement In-Circuit Serial Programming connections to the following pins:

- $\overline{\text{MCLR}}$/VPP/RE3
- VDD
- VSS
- RB7
- RB6

This will interface to the In-Circuit Debugger module available from Microchip or one of the third party development tool companies.

24.9 Single-Supply ICSP Programming

The LVP Configuration bit enables Single-Supply ICSP Programming (formerly known as Low-Voltage ICSP Programming or LVP). When Single-Supply Programming is enabled, the microcontroller can be programmed without requiring high voltage being applied to the $\overline{\text{MCLR}}$/VPP/RE3 pin. See "*PIC18(L)F2XK22/4XK22 Flash Memory Programming*" (DS41398) for more details about low voltage programming.

Note 1: High-voltage programming is always available, regardless of the state of the LVP bit, by applying VIHH to the $\overline{\text{MCLR}}$ pin.

2: By default, Single-Supply ICSP is enabled in unprogrammed devices (as supplied from Microchip) and erased devices.

3: While in Low-Voltage ICSP mode, $\overline{\text{MCLR}}$ is always enabled, regardless of the MCLRE bit, and the RE3 pin can no longer be used as a general purpose input.

The LVP bit may be set or cleared only when using standard high-voltage programming (VIHH applied to the $\overline{\text{MCLR}}$/VPP/RE3 pin). Once LVP has been disabled, only the standard high-voltage programming is available and must be used to program the device.

Memory that is not code-protected can be erased using either a block erase, or erased row by row, then written at any specified VDD. If code-protected memory is to be erased, a block erase is required.

25.0 INSTRUCTION SET SUMMARY

PIC18(L)F2X/4XK22 devices incorporate the standard set of 75 PIC18 core instructions, as well as an extended set of eight new instructions, for the optimization of code that is recursive or that utilizes a software stack. The extended set is discussed later in this section.

25.1 Standard Instruction Set

The standard PIC18 instruction set adds many enhancements to the previous PIC® MCU instruction sets, while maintaining an easy migration from these PIC® MCU instruction sets. Most instructions are a single program memory word (16 bits), but there are four instructions that require two program memory locations.

Each single-word instruction is a 16-bit word divided into an opcode, which specifies the instruction type and one or more operands, which further specify the operation of the instruction.

The instruction set is highly orthogonal and is grouped into four basic categories:

- **Byte-oriented** operations
- **Bit-oriented** operations
- **Literal** operations
- **Control** operations

The PIC18 instruction set summary in Table 25-2 lists **byte-oriented**, **bit-oriented**, **literal** and **control** operations. Table 25-1 shows the opcode field descriptions.

Most **byte-oriented** instructions have three operands:

1. The file register (specified by ‘f’)
2. The destination of the result (specified by ‘d’)
3. The accessed memory (specified by ‘a’)

The file register designator ‘f’ specifies which file register is to be used by the instruction. The destination designator ‘d’ specifies where the result of the operation is to be placed. If ‘d’ is zero, the result is placed in the WREG register. If ‘d’ is one, the result is placed in the file register specified in the instruction.

All **bit-oriented** instructions have three operands:

1. The file register (specified by ‘f’)
2. The bit in the file register (specified by ‘b’)
3. The accessed memory (specified by ‘a’)

The bit field designator ‘b’ selects the number of the bit affected by the operation, while the file register designator ‘f’ represents the number of the file in which the bit is located.

The **literal** instructions may use some of the following operands:

- A literal value to be loaded into a file register (specified by ‘k’)
- The desired FSR register to load the literal value into (specified by ‘f’)
- No operand required (specified by ‘—’)

The **control** instructions may use some of the following operands:

- A program memory address (specified by ‘n’)
- The mode of the `CALL` or `RETURN` instructions (specified by ‘s’)
- The mode of the table read and table write instructions (specified by ‘m’)
- No operand required (specified by ‘—’)

All instructions are a single word, except for four double-word instructions. These instructions were made double-word to contain the required information in 32 bits. In the second word, the four MSbs are ‘1’s. If this second word is executed as an instruction (by itself), it will execute as a `NOP`.

All single-word instructions are executed in a single instruction cycle, unless a conditional test is true or the program counter is changed as a result of the instruction. In these cases, the execution takes two instruction cycles, with the additional instruction cycle(s) executed as a `NOP`.

The double-word instructions execute in two instruction cycles.

One instruction cycle consists of four oscillator periods. Thus, for an oscillator frequency of 4 MHz, the normal instruction execution time is 1 μs. If a conditional test is true, or the program counter is changed as a result of an instruction, the instruction execution time is 2 μs. Two-word branch instructions (if true) would take 3 μs.

Figure 25-1 shows the general formats that the instructions can have. All examples use the convention ‘nnh’ to represent a hexadecimal number.

The Instruction Set Summary, shown in Table 25-2, lists the standard instructions recognized by the Microchip Assembler (MPASM™).

Section 25.1.1 “Standard Instruction Set” provides a description of each instruction.

© 2010-2016 Microchip Technology Inc.

TABLE 25-1: OPCODE FIELD DESCRIPTIONS

Field	Description
a	RAM access bit a = 0: RAM location in Access RAM (BSR register is ignored) a = 1: RAM bank is specified by BSR register
bbb	Bit address within an 8-bit file register (0 to 7).
BSR	Bank Select Register. Used to select the current RAM bank.
C, DC, Z, OV, N	ALU Status bits: **C**arry, **D**igit **C**arry, **Z**ero, **Ov**erflow, **N**egative.
d	Destination select bit d = 0: store result in WREG d = 1: store result in file register f
dest	Destination: either the WREG register or the specified register file location.
f	8-bit Register file address (00h to FFh) or 2-bit FSR designator (0h to 3h).
f_s	12-bit Register file address (000h to FFFh). This is the source address.
f_d	12-bit Register file address (000h to FFFh). This is the destination address.
GIE	Global Interrupt Enable bit.
k	Literal field, constant data or label (may be either an 8-bit, 12-bit or a 20-bit value).
label	Label name.
mm * *+ *- +*	The mode of the TBLPTR register for the table read and table write instructions. Only used with table read and table write instructions: No change to register (such as TBLPTR with table reads and writes) Post-Increment register (such as TBLPTR with table reads and writes) Post-Decrement register (such as TBLPTR with table reads and writes) Pre-Increment register (such as TBLPTR with table reads and writes)
n	The relative address (2's complement number) for relative branch instructions or the direct address for CALL/BRANCH and RETURN instructions.
PC	Program Counter.
PCL	Program Counter Low Byte.
PCH	Program Counter High Byte.
PCLATH	Program Counter High Byte Latch.
PCLATU	Program Counter Upper Byte Latch.
$\overline{PD}$	Power-down bit.
PRODH	Product of Multiply High Byte.
PRODL	Product of Multiply Low Byte.
s	Fast Call/Return mode select bit s = 0: do not update into/from shadow registers s = 1: certain registers loaded into/from shadow registers (Fast mode)
TBLPTR	21-bit Table Pointer (points to a Program Memory location).
TABLAT	8-bit Table Latch.
$\overline{TO}$	Time-out bit.
TOS	Top-of-Stack.
u	Unused or unchanged.
WDT	Watchdog Timer.
WREG	Working register (accumulator).
x	Don't care ('0' or '1'). The assembler will generate code with x = 0. It is the recommended form of use for compatibility with all Microchip software tools.
z_s	7-bit offset value for indirect addressing of register files (source).
z_d	7-bit offset value for indirect addressing of register files (destination).
{ }	Optional argument.
[text]	Indicates an indexed address.
(text)	The contents of text.
[expr]<n>	Specifies bit n of the register indicated by the pointer expr.
→	Assigned to.
< >	Register bit field.
∈	In the set of.
italics	User defined term (font is Courier).

FIGURE 25-1: GENERAL FORMAT FOR INSTRUCTIONS

Byte-oriented file register operations — **Example Instruction**

15 – 10	9	8	7 – 0
OPCODE	d	a	f (FILE #)

`ADDWF MYREG, W, B`

d = 0 for result destination to be WREG register
d = 1 for result destination to be file register (f)
a = 0 to force Access Bank
a = 1 for BSR to select bank
f = 8-bit file register address

Byte to Byte move operations (2-word)

15 – 12	11 – 0
OPCODE	f (Source FILE #)
1111	f (Destination FILE #)

`MOVFF MYREG1, MYREG2`

f = 12-bit file register address

Bit-oriented file register operations

15 – 12	11 – 9	8	7 – 0
OPCODE	b (BIT #)	a	f (FILE #)

`BSF MYREG, bit, B`

b = 3-bit position of bit in file register (f)
a = 0 to force Access Bank
a = 1 for BSR to select bank
f = 8-bit file register address

Literal operations

15 – 8	7 – 0
OPCODE	k (literal)

`MOVLW 7Fh`

k = 8-bit immediate value

Control operations

`CALL`, `GOTO` and Branch operations

15 – 8	7 – 0
OPCODE	n<7:0> (literal)
1111	n<19:8> (literal)

`GOTO Label`

n = 20-bit immediate value

15 – 8	8	7 – 0
OPCODE	S	n<7:0> (literal)
1111	n<19:8> (literal)	

`CALL MYFUNC`

S = Fast bit

15 – 11	10 – 0
OPCODE	n<10:0> (literal)

`BRA MYFUNC`

15 – 8	7 – 0
OPCODE	n<7:0> (literal)

`BC MYFUNC`

© 2010-2016 Microchip Technology Inc.

TABLE 25-2: PIC18(L)F2X/4XK22 INSTRUCTION SET

Mnemonic, Operands		Description	Cycles	16-Bit Instruction Word MSb			LSb	Status Affected	Notes
BYTE-ORIENTED OPERATIONS									
ADDWF	f, d, a	Add WREG and f	1	0010	01da	ffff	ffff	C, DC, Z, OV, N	1, 2
ADDWFC	f, d, a	Add WREG and CARRY bit to f	1	0010	00da	ffff	ffff	C, DC, Z, OV, N	1, 2
ANDWF	f, d, a	AND WREG with f	1	0001	01da	ffff	ffff	Z, N	1,2
CLRF	f, a	Clear f	1	0110	101a	ffff	ffff	Z	2
COMF	f, d, a	Complement f	1	0001	11da	ffff	ffff	Z, N	1, 2
CPFSEQ	f, a	Compare f with WREG, skip =	1 (2 or 3)	0110	001a	ffff	ffff	None	4
CPFSGT	f, a	Compare f with WREG, skip >	1 (2 or 3)	0110	010a	ffff	ffff	None	4
CPFSLT	f, a	Compare f with WREG, skip <	1 (2 or 3)	0110	000a	ffff	ffff	None	1, 2
DECF	f, d, a	Decrement f	1	0000	01da	ffff	ffff	C, DC, Z, OV, N	1, 2, 3, 4
DECFSZ	f, d, a	Decrement f, Skip if 0	1 (2 or 3)	0010	11da	ffff	ffff	None	1, 2, 3, 4
DCFSNZ	f, d, a	Decrement f, Skip if Not 0	1 (2 or 3)	0100	11da	ffff	ffff	None	1, 2
INCF	f, d, a	Increment f	1	0010	10da	ffff	ffff	C, DC, Z, OV, N	1, 2, 3, 4
INCFSZ	f, d, a	Increment f, Skip if 0	1 (2 or 3)	0011	11da	ffff	ffff	None	4
INFSNZ	f, d, a	Increment f, Skip if Not 0	1 (2 or 3)	0100	10da	ffff	ffff	None	1, 2
IORWF	f, d, a	Inclusive OR WREG with f	1	0001	00da	ffff	ffff	Z, N	1, 2
MOVF	f, d, a	Move f	1	0101	00da	ffff	ffff	Z, N	1
MOVFF	f_s, f_d	Move f_s (source) to 1st word f_d (destination) 2nd word	2	1100 1111	ffff ffff	ffff ffff	ffff ffff	None	
MOVWF	f, a	Move WREG to f	1	0110	111a	ffff	ffff	None	
MULWF	f, a	Multiply WREG with f	1	0000	001a	ffff	ffff	None	1, 2
NEGF	f, a	Negate f	1	0110	110a	ffff	ffff	C, DC, Z, OV, N	
RLCF	f, d, a	Rotate Left f through Carry	1	0011	01da	ffff	ffff	C, Z, N	1, 2
RLNCF	f, d, a	Rotate Left f (No Carry)	1	0100	01da	ffff	ffff	Z, N	
RRCF	f, d, a	Rotate Right f through Carry	1	0011	00da	ffff	ffff	C, Z, N	
RRNCF	f, d, a	Rotate Right f (No Carry)	1	0100	00da	ffff	ffff	Z, N	
SETF	f, a	Set f	1	0110	100a	ffff	ffff	None	1, 2
SUBFWB	f, d, a	Subtract f from WREG with borrow	1	0101	01da	ffff	ffff	C, DC, Z, OV, N	
SUBWF	f, d, a	Subtract WREG from f	1	0101	11da	ffff	ffff	C, DC, Z, OV, N	1, 2
SUBWFB	f, d, a	Subtract WREG from f with borrow	1	0101	10da	ffff	ffff	C, DC, Z, OV, N	
SWAPF	f, d, a	Swap nibbles in f	1	0011	10da	ffff	ffff	None	4
TSTFSZ	f, a	Test f, skip if 0	1 (2 or 3)	0110	011a	ffff	ffff	None	1, 2
XORWF	f, d, a	Exclusive OR WREG with f	1	0001	10da	ffff	ffff	Z, N	

Note 1: When a PORT register is modified as a function of itself (e.g., `MOVF PORTB, 1, 0`), the value used will be that value present on the pins themselves. For example, if the data latch is ‘1’ for a pin configured as input and is driven low by an external device, the data will be written back with a ‘0’.

2: If this instruction is executed on the TMR0 register (and where applicable, ‘d’ = 1), the prescaler will be cleared if assigned.

3: If Program Counter (PC) is modified or a conditional test is true, the instruction requires two cycles. The second cycle is executed as a `NOP`.

4: Some instructions are two-word instructions. The second word of these instructions will be executed as a `NOP` unless the first word of the instruction retrieves the information embedded in these 16 bits. This ensures that all program memory locations have a valid instruction.

TABLE 25-2: PIC18(L)F2X/4XK22 INSTRUCTION SET (CONTINUED)

Mnemonic, Operands		Description	Cycles	16-Bit Instruction Word MSb			LSb	Status Affected	Notes
BIT-ORIENTED OPERATIONS									
BCF	f, b, a	Bit Clear f	1	1001	bbba	ffff	ffff	None	1, 2
BSF	f, b, a	Bit Set f	1	1000	bbba	ffff	ffff	None	1, 2
BTFSC	f, b, a	Bit Test f, Skip if Clear	1 (2 or 3)	1011	bbba	ffff	ffff	None	3, 4
BTFSS	f, b, a	Bit Test f, Skip if Set	1 (2 or 3)	1010	bbba	ffff	ffff	None	3, 4
BTG	f, b, a	Bit Toggle f	1	0111	bbba	ffff	ffff	None	1, 2
CONTROL OPERATIONS									
BC	n	Branch if Carry	1 (2)	1110	0010	nnnn	nnnn	None	
BN	n	Branch if Negative	1 (2)	1110	0110	nnnn	nnnn	None	
BNC	n	Branch if Not Carry	1 (2)	1110	0011	nnnn	nnnn	None	
BNN	n	Branch if Not Negative	1 (2)	1110	0111	nnnn	nnnn	None	
BNOV	n	Branch if Not Overflow	1 (2)	1110	0101	nnnn	nnnn	None	
BNZ	n	Branch if Not Zero	1 (2)	1110	0001	nnnn	nnnn	None	
BOV	n	Branch if Overflow	1 (2)	1110	0100	nnnn	nnnn	None	
BRA	n	Branch Unconditionally	2	1101	0nnn	nnnn	nnnn	None	
BZ	n	Branch if Zero	1 (2)	1110	0000	nnnn	nnnn	None	
CALL	k, s	Call subroutine 1st word	2	1110	110s	kkkk	kkkk	None	
		2nd word		1111	kkkk	kkkk	kkkk		
CLRWDT	—	Clear Watchdog Timer	1	0000	0000	0000	0100	$\overline{TO}$, $\overline{PD}$	
DAW	—	Decimal Adjust WREG	1	0000	0000	0000	0111	C	
GOTO	k	Go to address 1st word	2	1110	1111	kkkk	kkkk	None	
		2nd word		1111	kkkk	kkkk	kkkk		
NOP	—	No Operation	1	0000	0000	0000	0000	None	
NOP	—	No Operation	1	1111	xxxx	xxxx	xxxx	None	4
POP	—	Pop top of return stack (TOS)	1	0000	0000	0000	0110	None	
PUSH	—	Push top of return stack (TOS)	1	0000	0000	0000	0101	None	
RCALL	n	Relative Call	2	1101	1nnn	nnnn	nnnn	None	
RESET		Software device Reset	1	0000	0000	1111	1111	All	
RETFIE	s	Return from interrupt enable	2	0000	0000	0001	000s	GIE/GIEH, PEIE/GIEL	
RETLW	k	Return with literal in WREG	2	0000	1100	kkkk	kkkk	None	
RETURN	s	Return from Subroutine	2	0000	0000	0001	001s	None	
SLEEP	—	Go into Standby mode	1	0000	0000	0000	0011	$\overline{TO}$, $\overline{PD}$	

Note 1: When a PORT register is modified as a function of itself (e.g., `MOVF PORTB, 1, 0`), the value used will be that value present on the pins themselves. For example, if the data latch is ‘1’ for a pin configured as input and is driven low by an external device, the data will be written back with a ‘0’.

2: If this instruction is executed on the TMR0 register (and where applicable, ‘d’ = 1), the prescaler will be cleared if assigned.

3: If Program Counter (PC) is modified or a conditional test is true, the instruction requires two cycles. The second cycle is executed as a `NOP`.

4: Some instructions are two-word instructions. The second word of these instructions will be executed as a `NOP` unless the first word of the instruction retrieves the information embedded in these 16 bits. This ensures that all program memory locations have a valid instruction.

© 2010-2016 Microchip Technology Inc.

TABLE 25-2: PIC18(L)F2X/4XK22 INSTRUCTION SET (CONTINUED)

Mnemonic, Operands	Description	Cycles	16-Bit Instruction Word MSb			LSb	Status Affected	Notes
LITERAL OPERATIONS								
ADDLW k	Add literal and WREG	1	0000	1111	kkkk	kkkk	C, DC, Z, OV, N	
ANDLW k	AND literal with WREG	1	0000	1011	kkkk	kkkk	Z, N	
IORLW k	Inclusive OR literal with WREG	1	0000	1001	kkkk	kkkk	Z, N	
LFSR f, k	Move literal (12-bit) 2nd word	2	1110	1110	00ff	kkkk	None	
	to FSR(f) 1st word		1111	0000	kkkk	kkkk		
MOVLB k	Move literal to BSR<3:0>	1	0000	0001	0000	kkkk	None	
MOVLW k	Move literal to WREG	1	0000	1110	kkkk	kkkk	None	
MULLW k	Multiply literal with WREG	1	0000	1101	kkkk	kkkk	None	
RETLW k	Return with literal in WREG	2	0000	1100	kkkk	kkkk	None	
SUBLW k	Subtract WREG from literal	1	0000	1000	kkkk	kkkk	C, DC, Z, OV, N	
XORLW k	Exclusive OR literal with WREG	1	0000	1010	kkkk	kkkk	Z, N	
DATA MEMORY ↔ PROGRAM MEMORY OPERATIONS								
TBLRD*	Table Read	2	0000	0000	0000	1000	None	
TBLRD*+	Table Read with post-increment		0000	0000	0000	1001	None	
TBLRD*-	Table Read with post-decrement		0000	0000	0000	1010	None	
TBLRD+*	Table Read with pre-increment		0000	0000	0000	1011	None	
TBLWT*	Table Write	2	0000	0000	0000	1100	None	
TBLWT*+	Table Write with post-increment		0000	0000	0000	1101	None	
TBLWT*-	Table Write with post-decrement		0000	0000	0000	1110	None	
TBLWT+*	Table Write with pre-increment		0000	0000	0000	1111	None	

Note 1: When a PORT register is modified as a function of itself (e.g., `MOVF PORTB, 1, 0`), the value used will be that value present on the pins themselves. For example, if the data latch is ‘1’ for a pin configured as input and is driven low by an external device, the data will be written back with a ‘0’.

2: If this instruction is executed on the TMR0 register (and where applicable, ‘d’ = 1), the prescaler will be cleared if assigned.

3: If Program Counter (PC) is modified or a conditional test is true, the instruction requires two cycles. The second cycle is executed as a `NOP`.

4: Some instructions are two-word instructions. The second word of these instructions will be executed as a `NOP` unless the first word of the instruction retrieves the information embedded in these 16 bits. This ensures that all program memory locations have a valid instruction.

25.1.1 STANDARD INSTRUCTION SET

ADDLW — ADD literal to W

Syntax:	ADDLW k
Operands:	$0 \le k \le 255$
Operation:	(W) + k → W
Status Affected:	N, OV, C, DC, Z
Encoding:	0000 | 1111 | kkkk | kkkk
Description:	The contents of W are added to the 8-bit literal 'k' and the result is placed in W.
Words:	1
Cycles:	1

Q Cycle Activity:

Q1	Q2	Q3	Q4
Decode	Read literal 'k'	Process Data	Write to W

Example: `ADDLW 15h`

Before Instruction
W = 10h
After Instruction
W = 25h

ADDWF — ADD W to f

Syntax:	ADDWF f {,d {,a}}
Operands:	$0 \le f \le 255$ $d \in [0,1]$ $a \in [0,1]$
Operation:	(W) + (f) → dest
Status Affected:	N, OV, C, DC, Z
Encoding:	0010 | 01da | ffff | ffff
Description:	Add W to register 'f'. If 'd' is '0', the result is stored in W. If 'd' is '1', the result is stored back in register 'f' (default). If 'a' is '0', the Access Bank is selected. If 'a' is '1', the BSR is used to select the GPR bank. If 'a' is '0' and the extended instruction set is enabled, this instruction operates in Indexed Literal Offset Addressing mode whenever $f \le 95$ (5Fh). See **Section 25.2.3 "Byte-Oriented and Bit-Oriented Instructions in Indexed Literal Offset Mode"** for details.
Words:	1
Cycles:	1

Q Cycle Activity:

Q1	Q2	Q3	Q4
Decode	Read register 'f'	Process Data	Write to destination

Example: `ADDWF REG, 0, 0`

Before Instruction
W = 17h
REG = 0C2h
After Instruction
W = 0D9h
REG = 0C2h

Note: All PIC18 instructions may take an optional label argument preceding the instruction mnemonic for use in symbolic addressing. If a label is used, the instruction format then becomes: {label} instruction argument(s).

© 2010-2016 Microchip Technology Inc.

ADDWFC — ADD W and CARRY bit to f

Syntax:	ADDWFC f {,d {,a}}
Operands:	$0 \le f \le 255$ $d \in [0,1]$ $a \in [0,1]$
Operation:	(W) + (f) + (C) → dest
Status Affected:	N,OV, C, DC, Z
Encoding:	`0010` `00da` `ffff` `ffff`
Description:	Add W, the CARRY flag and data memory location 'f'. If 'd' is '0', the result is placed in W. If 'd' is '1', the result is placed in data memory location 'f'. If 'a' is '0', the Access Bank is selected. If 'a' is '1', the BSR is used to select the GPR bank. If 'a' is '0' and the extended instruction set is enabled, this instruction operates in Indexed Literal Offset Addressing mode whenever $f \le 95$ (5Fh). See **Section 25.2.3 "Byte-Oriented and Bit-Oriented Instructions in Indexed Literal Offset Mode"** for details.
Words:	1
Cycles:	1

Q Cycle Activity:

Q1	Q2	Q3	Q4
Decode	Read register 'f'	Process Data	Write to destination

Example: `ADDWFC REG, 0, 1`

Before Instruction
CARRY bit = 1
REG = 02h
W = 4Dh

After Instruction
CARRY bit = 0
REG = 02h
W = 50h

ANDLW — AND literal with W

Syntax:	ANDLW k
Operands:	$0 \le k \le 255$
Operation:	(W) .AND. k → W
Status Affected:	N, Z
Encoding:	`0000` `1011` `kkkk` `kkkk`
Description:	The contents of W are AND'ed with the 8-bit literal 'k'. The result is placed in W.
Words:	1
Cycles:	1

Q Cycle Activity:

Q1	Q2	Q3	Q4
Decode	Read literal 'k'	Process Data	Write to W

Example: `ANDLW 05Fh`

Before Instruction
W = A3h

After Instruction
W = 03h

ANDWF — AND W with f

Syntax:	ANDWF f {,d {,a}}
Operands:	$0 \le f \le 255$ $d \in [0,1]$ $a \in [0,1]$
Operation:	(W) .AND. (f) → dest
Status Affected:	N, Z
Encoding:	0001 | 01da | ffff | ffff
Description:	The contents of W are AND'ed with register 'f'. If 'd' is '0', the result is stored in W. If 'd' is '1', the result is stored back in register 'f' (default). If 'a' is '0', the Access Bank is selected. If 'a' is '1', the BSR is used to select the GPR bank. If 'a' is '0' and the extended instruction set is enabled, this instruction operates in Indexed Literal Offset Addressing mode whenever $f \le 95$ (5Fh). See **Section 25.2.3 "Byte-Oriented and Bit-Oriented Instructions in Indexed Literal Offset Mode"** for details.
Words:	1
Cycles:	1

Q Cycle Activity:

Q1	Q2	Q3	Q4
Decode	Read register 'f'	Process Data	Write to destination

Example: `ANDWF REG, 0, 0`

Before Instruction
W = 17h
REG = C2h
After Instruction
W = 02h
REG = C2h

BC — Branch if Carry

Syntax:	BC n
Operands:	$-128 \le n \le 127$
Operation:	if CARRY bit is '1' (PC) + 2 + 2n → PC
Status Affected:	None
Encoding:	1110 | 0010 | nnnn | nnnn
Description:	If the CARRY bit is '1', then the program will branch. The 2's complement number '2n' is added to the PC. Since the PC will have incremented to fetch the next instruction, the new address will be PC + 2 + 2n. This instruction is then a 2-cycle instruction.
Words:	1
Cycles:	1(2)

Q Cycle Activity:
If Jump:

Q1	Q2	Q3	Q4
Decode	Read literal 'n'	Process Data	Write to PC
No operation	No operation	No operation	No operation

If No Jump:

Q1	Q2	Q3	Q4
Decode	Read literal 'n'	Process Data	No operation

Example: `HERE BC 5`

Before Instruction
PC = address (HERE)
After Instruction
If CARRY = 1;
PC = address (HERE + 12)
If CARRY = 0;
PC = address (HERE + 2)

© 2010-2016 Microchip Technology Inc.

BCF — Bit Clear f

Syntax: BCF f, b {,a}

Operands: $0 \le f \le 255$
$0 \le b \le 7$
$a \in [0,1]$

Operation: $0 \rightarrow f<b>$

Status Affected: None

Encoding:

1001	bbba	ffff	ffff

Description: Bit 'b' in register 'f' is cleared.
If 'a' is '0', the Access Bank is selected.
If 'a' is '1', the BSR is used to select the GPR bank.
If 'a' is '0' and the extended instruction set is enabled, this instruction operates in Indexed Literal Offset Addressing mode whenever $f \le 95$ (5Fh). See **Section 25.2.3 "Byte-Oriented and Bit-Oriented Instructions in Indexed Literal Offset Mode"** for details.

Words: 1

Cycles: 1

Q Cycle Activity:

Q1	Q2	Q3	Q4
Decode	Read register 'f'	Process Data	Write register 'f'

Example: `BCF FLAG_REG, 7, 0`

Before Instruction
FLAG_REG = C7h
After Instruction
FLAG_REG = 47h

BN — Branch if Negative

Syntax: BN n

Operands: $-128 \le n \le 127$

Operation: if NEGATIVE bit is '1'
$(PC) + 2 + 2n \rightarrow PC$

Status Affected: None

Encoding:

1110	0110	nnnn	nnnn

Description: If the NEGATIVE bit is '1', then the program will branch.
The 2's complement number '2n' is added to the PC. Since the PC will have incremented to fetch the next instruction, the new address will be PC + 2 + 2n. This instruction is then a 2-cycle instruction.

Words: 1

Cycles: 1(2)

Q Cycle Activity:
If Jump:

Q1	Q2	Q3	Q4
Decode	Read literal 'n'	Process Data	Write to PC
No operation	No operation	No operation	No operation

If No Jump:

Q1	Q2	Q3	Q4
Decode	Read literal 'n'	Process Data	No operation

Example: `HERE BN Jump`

Before Instruction
PC = address (HERE)
After Instruction
If NEGATIVE = 1;
PC = address (Jump)
If NEGATIVE = 0;
PC = address (HERE + 2)

BNC — Branch if Not Carry

Syntax:	BNC n
Operands:	-128 ≤ n ≤ 127
Operation:	if CARRY bit is '0' (PC) + 2 + 2n → PC
Status Affected:	None
Encoding:	1110 | 0011 | nnnn | nnnn
Description:	If the CARRY bit is '0', then the program will branch. The 2's complement number '2n' is added to the PC. Since the PC will have incremented to fetch the next instruction, the new address will be PC + 2 + 2n. This instruction is then a 2-cycle instruction.
Words:	1
Cycles:	1(2)

Q Cycle Activity:

If Jump:

Q1	Q2	Q3	Q4
Decode	Read literal 'n'	Process Data	Write to PC
No operation	No operation	No operation	No operation

If No Jump:

Q1	Q2	Q3	Q4
Decode	Read literal 'n'	Process Data	No operation

Example: `HERE BNC Jump`

```
Before Instruction
    PC          =   address (HERE)
After Instruction
    If CARRY    =   0;
        PC      =   address (Jump)
    If CARRY    =   1;
        PC      =   address (HERE + 2)
```

BNN — Branch if Not Negative

Syntax:	BNN n
Operands:	-128 ≤ n ≤ 127
Operation:	if NEGATIVE bit is '0' (PC) + 2 + 2n → PC
Status Affected:	None
Encoding:	1110 | 0111 | nnnn | nnnn
Description:	If the NEGATIVE bit is '0', then the program will branch. The 2's complement number '2n' is added to the PC. Since the PC will have incremented to fetch the next instruction, the new address will be PC + 2 + 2n. This instruction is then a 2-cycle instruction.
Words:	1
Cycles:	1(2)

Q Cycle Activity:

If Jump:

Q1	Q2	Q3	Q4
Decode	Read literal 'n'	Process Data	Write to PC
No operation	No operation	No operation	No operation

If No Jump:

Q1	Q2	Q3	Q4
Decode	Read literal 'n'	Process Data	No operation

Example: `HERE BNN Jump`

```
Before Instruction
    PC          =   address (HERE)
After Instruction
    If NEGATIVE =   0;
        PC      =   address (Jump)
    If NEGATIVE =   1;
        PC      =   address (HERE + 2)
```


© 2010-2016 Microchip Technology Inc.

BNOV — Branch if Not Overflow

Syntax:	BNOV n
Operands:	-128 ≤ n ≤ 127
Operation:	if OVERFLOW bit is '0' (PC) + 2 + 2n → PC
Status Affected:	None
Encoding:	1110 | 0101 | nnnn | nnnn
Description:	If the OVERFLOW bit is '0', then the program will branch. The 2's complement number '2n' is added to the PC. Since the PC will have incremented to fetch the next instruction, the new address will be PC + 2 + 2n. This instruction is then a 2-cycle instruction.
Words:	1
Cycles:	1(2)

Q Cycle Activity:

If Jump:

Q1	Q2	Q3	Q4
Decode	Read literal 'n'	Process Data	Write to PC
No operation	No operation	No operation	No operation

If No Jump:

Q1	Q2	Q3	Q4
Decode	Read literal 'n'	Process Data	No operation

Example: `HERE BNOV Jump`

```
Before Instruction
    PC              =   address (HERE)
After Instruction
    If OVERFLOW =   0;
        PC      =   address (Jump)
    If OVERFLOW =   1;
        PC      =   address (HERE + 2)
```

BNZ — Branch if Not Zero

Syntax:	BNZ n
Operands:	-128 ≤ n ≤ 127
Operation:	if ZERO bit is '0' (PC) + 2 + 2n → PC
Status Affected:	None
Encoding:	1110 | 0001 | nnnn | nnnn
Description:	If the ZERO bit is '0', then the program will branch. The 2's complement number '2n' is added to the PC. Since the PC will have incremented to fetch the next instruction, the new address will be PC + 2 + 2n. This instruction is then a 2-cycle instruction.
Words:	1
Cycles:	1(2)

Q Cycle Activity:

If Jump:

Q1	Q2	Q3	Q4
Decode	Read literal 'n'	Process Data	Write to PC
No operation	No operation	No operation	No operation

If No Jump:

Q1	Q2	Q3	Q4
Decode	Read literal 'n'	Process Data	No operation

Example: `HERE BNZ Jump`

```
Before Instruction
    PC              =   address (HERE)
After Instruction
    If ZERO     =   0;
        PC      =   address (Jump)
    If ZERO     =   1;
        PC      =   address (HERE + 2)
```

BRA — Unconditional Branch

Syntax:	BRA n
Operands:	$-1024 \le n \le 1023$
Operation:	(PC) + 2 + 2n → PC
Status Affected:	None
Encoding:	1101 | 0nnn | nnnn | nnnn
Description:	Add the 2's complement number '2n' to the PC. Since the PC will have incremented to fetch the next instruction, the new address will be PC + 2 + 2n. This instruction is a 2-cycle instruction.
Words:	1
Cycles:	2

Q Cycle Activity:

Q1	Q2	Q3	Q4
Decode	Read literal 'n'	Process Data	Write to PC
No operation	No operation	No operation	No operation

Example: `HERE BRA Jump`

Before Instruction
PC = address (HERE)
After Instruction
PC = address (Jump)

BSF — Bit Set f

Syntax:	BSF f, b {,a}
Operands:	$0 \le f \le 255$ $0 \le b \le 7$ $a \in [0,1]$
Operation:	1 → f<b>
Status Affected:	None
Encoding:	1000 | bbba | ffff | ffff
Description:	Bit 'b' in register 'f' is set. If 'a' is '0', the Access Bank is selected. If 'a' is '1', the BSR is used to select the GPR bank. If 'a' is '0' and the extended instruction set is enabled, this instruction operates in Indexed Literal Offset Addressing mode whenever $f \le 95$ (5Fh). See **Section 25.2.3 "Byte-Oriented and Bit-Oriented Instructions in Indexed Literal Offset Mode"** for details.
Words:	1
Cycles:	1

Q Cycle Activity:

Q1	Q2	Q3	Q4
Decode	Read register 'f'	Process Data	Write register 'f'

Example: `BSF FLAG_REG, 7, 1`

Before Instruction
FLAG_REG = 0Ah
After Instruction
FLAG_REG = 8Ah

© 2010-2016 Microchip Technology Inc.

BTFSC — Bit Test File, Skip if Clear

Syntax: BTFSC f, b {,a}

Operands: $0 \le f \le 255$
$0 \le b \le 7$
$a \in [0,1]$

Operation: skip if (f<b>) = 0

Status Affected: None

Encoding:

1011	bbba	ffff	ffff

Description: If bit 'b' in register 'f' is '0', then the next instruction is skipped. If bit 'b' is '0', then the next instruction fetched during the current instruction execution is discarded and a NOP is executed instead, making this a 2-cycle instruction.
If 'a' is '0', the Access Bank is selected. If 'a' is '1', the BSR is used to select the GPR bank.
If 'a' is '0' and the extended instruction set is enabled, this instruction operates in Indexed Literal Offset Addressing mode whenever $f \le 95$ (5Fh).
See **Section 25.2.3 "Byte-Oriented and Bit-Oriented Instructions in Indexed Literal Offset Mode"** for details.

Words: 1

Cycles: 1(2)
Note: 3 cycles if skip and followed by a 2-word instruction.

Q Cycle Activity:

Q1	Q2	Q3	Q4
Decode	Read register 'f'	Process Data	No operation

If skip:

Q1	Q2	Q3	Q4
No operation	No operation	No operation	No operation

If skip and followed by 2-word instruction:

Q1	Q2	Q3	Q4
No operation	No operation	No operation	No operation
No operation	No operation	No operation	No operation

Example:

```
HERE    BTFSC   FLAG, 1, 0
FALSE   :
TRUE    :
```

Before Instruction
PC = address (HERE)
After Instruction
If FLAG<1> = 0;
PC = address (TRUE)
If FLAG<1> = 1;
PC = address (FALSE)

BTFSS — Bit Test File, Skip if Set

Syntax: BTFSS f, b {,a}

Operands: $0 \le f \le 255$
$0 \le b < 7$
$a \in [0,1]$

Operation: skip if (f<b>) = 1

Status Affected: None

Encoding:

1010	bbba	ffff	ffff

Description: If bit 'b' in register 'f' is '1', then the next instruction is skipped. If bit 'b' is '1', then the next instruction fetched during the current instruction execution is discarded and a NOP is executed instead, making this a 2-cycle instruction.
If 'a' is '0', the Access Bank is selected. If 'a' is '1', the BSR is used to select the GPR bank.
If 'a' is '0' and the extended instruction set is enabled, this instruction operates in Indexed Literal Offset Addressing mode whenever $f \le 95$ (5Fh).
See **Section 25.2.3 "Byte-Oriented and Bit-Oriented Instructions in Indexed Literal Offset Mode"** for details.

Words: 1

Cycles: 1(2)
Note: 3 cycles if skip and followed by a 2-word instruction.

Q Cycle Activity:

Q1	Q2	Q3	Q4
Decode	Read register 'f'	Process Data	No operation

If skip:

Q1	Q2	Q3	Q4
No operation	No operation	No operation	No operation

If skip and followed by 2-word instruction:

Q1	Q2	Q3	Q4
No operation	No operation	No operation	No operation
No operation	No operation	No operation	No operation

Example:

```
HERE    BTFSS   FLAG, 1, 0
FALSE   :
TRUE    :
```

Before Instruction
PC = address (HERE)
After Instruction
If FLAG<1> = 0;
PC = address (FALSE)
If FLAG<1> = 1;
PC = address (TRUE)

BTG — Bit Toggle f

Syntax:	BTG f, b {,a}
Operands:	$0 \le f \le 255$ $0 \le b < 7$ $a \in [0,1]$
Operation:	$(\overline{f<b>}) \rightarrow f<b>$
Status Affected:	None
Encoding:	0111 | bbba | ffff | ffff
Description:	Bit 'b' in data memory location 'f' is inverted. If 'a' is '0', the Access Bank is selected. If 'a' is '1', the BSR is used to select the GPR bank. If 'a' is '0' and the extended instruction set is enabled, this instruction operates in Indexed Literal Offset Addressing mode whenever $f \le 95$ (5Fh). See **Section 25.2.3 "Byte-Oriented and Bit-Oriented Instructions in Indexed Literal Offset Mode"** for details.
Words:	1
Cycles:	1

Q Cycle Activity:

Q1	Q2	Q3	Q4
Decode	Read register 'f'	Process Data	Write register 'f'

Example: `BTG PORTC, 4, 0`

Before Instruction:
PORTC = 0111 0101 [75h]
After Instruction:
PORTC = 0110 0101 [65h]

BOV — Branch if Overflow

Syntax:	BOV n
Operands:	$-128 \le n \le 127$
Operation:	if OVERFLOW bit is '1' $(PC) + 2 + 2n \rightarrow PC$
Status Affected:	None
Encoding:	1110 | 0100 | nnnn | nnnn
Description:	If the OVERFLOW bit is '1', then the program will branch. The 2's complement number '2n' is added to the PC. Since the PC will have incremented to fetch the next instruction, the new address will be PC + 2 + 2n. This instruction is then a 2-cycle instruction.
Words:	1
Cycles:	1(2)

Q Cycle Activity:
If Jump:

Q1	Q2	Q3	Q4
Decode	Read literal 'n'	Process Data	Write to PC
No operation	No operation	No operation	No operation

If No Jump:

Q1	Q2	Q3	Q4
Decode	Read literal 'n'	Process Data	No operation

Example: `HERE BOV Jump`

Before Instruction
PC = address (HERE)
After Instruction
If OVERFLOW = 1;
PC = address (Jump)
If OVERFLOW = 0;
PC = address (HERE + 2)

© 2010-2016 Microchip Technology Inc.

BZ — Branch if Zero

Syntax:	BZ n
Operands:	$-128 \le n \le 127$
Operation:	if ZERO bit is '1' (PC) + 2 + 2n → PC
Status Affected:	None
Encoding:	1110 | 0000 | nnnn | nnnn
Description:	If the ZERO bit is '1', then the program will branch. The 2's complement number '2n' is added to the PC. Since the PC will have incremented to fetch the next instruction, the new address will be PC + 2 + 2n. This instruction is then a 2-cycle instruction.
Words:	1
Cycles:	1(2)

Q Cycle Activity:

If Jump:

Q1	Q2	Q3	Q4
Decode	Read literal 'n'	Process Data	Write to PC
No operation	No operation	No operation	No operation

If No Jump:

Q1	Q2	Q3	Q4
Decode	Read literal 'n'	Process Data	No operation

Example: `HERE BZ Jump`

```
Before Instruction
    PC          =   address (HERE)
After Instruction
    If ZERO     =   1;
        PC      =   address (Jump)
    If ZERO     =   0;
        PC      =   address (HERE + 2)
```

CALL — Subroutine Call

Syntax:	CALL k {,s}
Operands:	$0 \le k \le 1048575$ $s \in [0,1]$
Operation:	(PC) + 4 → TOS, k → PC<20:1>, if s = 1 (W) → WS, (Status) → STATUSS, (BSR) → BSRS
Status Affected:	None
Encoding: 1st word (k<7:0>) 2nd word(k<19:8>)	1110 | 110s | $k_7$kkk | kkkk$_0$ 1111 | k_{19}kkk | kkkk | kkkk$_8$
Description:	Subroutine call of entire 2-Mbyte memory range. First, return address (PC + 4) is pushed onto the return stack. If 's' = 1, the W, STATUS and BSR registers are also pushed into their respective shadow registers, WS, STATUSS and BSRS. If 's' = 0, no update occurs (default). Then, the 20-bit value 'k' is loaded into PC<20:1>. CALL is a 2-cycle instruction.
Words:	2
Cycles:	2

Q Cycle Activity:

Q1	Q2	Q3	Q4
Decode	Read literal 'k'<7:0>,	PUSH PC to stack	Read literal 'k'<19:8>, Write to PC
No operation	No operation	No operation	No operation

Example: `HERE CALL THERE, 1`

```
Before Instruction
    PC      =   address (HERE)
After Instruction
    PC      =   address (THERE)
    TOS     =   address (HERE + 4)
    WS      =   W
    BSRS    =   BSR
    STATUSS =   Status
```

CLRF — Clear f

Syntax:	CLRF f {,a}
Operands:	$0 \le f \le 255$ $a \in [0,1]$
Operation:	000h → f 1 → Z
Status Affected:	Z
Encoding:	0110 | 101a | ffff | ffff
Description:	Clears the contents of the specified register. If 'a' is '0', the Access Bank is selected. If 'a' is '1', the BSR is used to select the GPR bank. If 'a' is '0' and the extended instruction set is enabled, this instruction operates in Indexed Literal Offset Addressing mode whenever $f \le 95$ (5Fh). See **Section 25.2.3 "Byte-Oriented and Bit-Oriented Instructions in Indexed Literal Offset Mode"** for details.
Words:	1
Cycles:	1

Q Cycle Activity:

Q1	Q2	Q3	Q4
Decode	Read register 'f'	Process Data	Write register 'f'

Example: `CLRF FLAG_REG, 1`

Before Instruction
FLAG_REG = 5Ah
After Instruction
FLAG_REG = 00h

CLRWDT — Clear Watchdog Timer

Syntax:	CLRWDT
Operands:	None
Operation:	000h → WDT, 000h → WDT postscaler, 1 → $\overline{TO}$, 1 → $\overline{PD}$
Status Affected:	$\overline{TO}$, $\overline{PD}$
Encoding:	0000 | 0000 | 0000 | 0100
Description:	CLRWDT instruction resets the Watchdog Timer. It also resets the post-scaler of the WDT. Status bits, $\overline{TO}$ and $\overline{PD}$, are set.
Words:	1
Cycles:	1

Q Cycle Activity:

Q1	Q2	Q3	Q4
Decode	No operation	Process Data	No operation

Example: `CLRWDT`

Before Instruction
WDT Counter = ?
After Instruction
WDT Counter = 00h
WDT Postscaler = 0
$\overline{TO}$ = 1
$\overline{PD}$ = 1

© 2010-2016 Microchip Technology Inc.

COMF — Complement f

Syntax:	COMF f {,d {,a}}
Operands:	$0 \le f \le 255$ $d \in [0,1]$ $a \in [0,1]$
Operation:	$(\bar{f}) \rightarrow$ dest
Status Affected:	N, Z
Encoding:	0001 | 11da | ffff | ffff
Description:	The contents of register 'f' are complemented. If 'd' is '0', the result is stored in W. If 'd' is '1', the result is stored back in register 'f' (default). If 'a' is '0', the Access Bank is selected. If 'a' is '1', the BSR is used to select the GPR bank. If 'a' is '0' and the extended instruction set is enabled, this instruction operates in Indexed Literal Offset Addressing mode whenever $f \le 95$ (5Fh). See **Section 25.2.3 "Byte-Oriented and Bit-Oriented Instructions in Indexed Literal Offset Mode"** for details.
Words:	1
Cycles:	1

Q Cycle Activity:

Q1	Q2	Q3	Q4
Decode	Read register 'f'	Process Data	Write to destination

Example: `COMF REG, 0, 0`

Before Instruction
REG = 13h
After Instruction
REG = 13h
W = ECh

CPFSEQ — Compare f with W, skip if f = W

Syntax:	CPFSEQ f {,a}
Operands:	$0 \le f \le 255$ $a \in [0,1]$
Operation:	(f) – (W), skip if (f) = (W) (unsigned comparison)
Status Affected:	None
Encoding:	0110 | 001a | ffff | ffff
Description:	Compares the contents of data memory location 'f' to the contents of W by performing an unsigned subtraction. If 'f' = W, then the fetched instruction is discarded and a NOP is executed instead, making this a 2-cycle instruction. If 'a' is '0', the Access Bank is selected. If 'a' is '1', the BSR is used to select the GPR bank. If 'a' is '0' and the extended instruction set is enabled, this instruction operates in Indexed Literal Offset Addressing mode whenever $f \le 95$ (5Fh). See **Section 25.2.3 "Byte-Oriented and Bit-Oriented Instructions in Indexed Literal Offset Mode"** for details.
Words:	1
Cycles:	1(2) **Note:** 3 cycles if skip and followed by a 2-word instruction.

Q Cycle Activity:

Q1	Q2	Q3	Q4
Decode	Read register 'f'	Process Data	No operation

If skip:

Q1	Q2	Q3	Q4
No operation	No operation	No operation	No operation

If skip and followed by 2-word instruction:

Q1	Q2	Q3	Q4
No operation	No operation	No operation	No operation
No operation	No operation	No operation	No operation

Example:
```
HERE     CPFSEQ REG, 0
NEQUAL   :
EQUAL    :
```

Before Instruction
PC Address = HERE
W = ?
REG = ?
After Instruction
If REG = W;
PC = Address (EQUAL)
If REG ≠ W;
PC = Address (NEQUAL)

CPFSGT — Compare f with W, skip if f > W

Syntax: CPFSGT f {,a}

Operands: $0 \le f \le 255$
$a \in [0,1]$

Operation: (f) – (W),
skip if (f) > (W)
(unsigned comparison)

Status Affected: None

Encoding:

0110	010a	ffff	ffff

Description: Compares the contents of data memory location 'f' to the contents of the W by performing an unsigned subtraction.
If the contents of 'f' are greater than the contents of WREG, then the fetched instruction is discarded and a NOP is executed instead, making this a 2-cycle instruction.
If 'a' is '0', the Access Bank is selected. If 'a' is '1', the BSR is used to select the GPR bank.
If 'a' is '0' and the extended instruction set is enabled, this instruction operates in Indexed Literal Offset Addressing mode whenever $f \le 95$ (5Fh). See **Section 25.2.3 "Byte-Oriented and Bit-Oriented Instructions in Indexed Literal Offset Mode"** for details.

Words: 1

Cycles: 1(2)
Note: 3 cycles if skip and followed by a 2-word instruction.

Q Cycle Activity:

Q1	Q2	Q3	Q4
Decode	Read register 'f'	Process Data	No operation

If skip:

Q1	Q2	Q3	Q4
No operation	No operation	No operation	No operation

If skip and followed by 2-word instruction:

Q1	Q2	Q3	Q4
No operation	No operation	No operation	No operation
No operation	No operation	No operation	No operation

Example:

```
HERE      CPFSGT REG, 0
NGREATER  :
GREATER   :
```

Before Instruction
PC = Address (HERE)
W = ?
After Instruction
If REG > W;
PC = Address (GREATER)
If REG ≤ W;
PC = Address (NGREATER)

CPFSLT — Compare f with W, skip if f < W

Syntax: CPFSLT f {,a}

Operands: $0 \le f \le 255$
$a \in [0,1]$

Operation: (f) – (W),
skip if (f) < (W)
(unsigned comparison)

Status Affected: None

Encoding:

0110	000a	ffff	ffff

Description: Compares the contents of data memory location 'f' to the contents of W by performing an unsigned subtraction.
If the contents of 'f' are less than the contents of W, then the fetched instruction is discarded and a NOP is executed instead, making this a 2-cycle instruction.
If 'a' is '0', the Access Bank is selected. If 'a' is '1', the BSR is used to select the GPR bank.

Words: 1

Cycles: 1(2)
Note: 3 cycles if skip and followed by a 2-word instruction.

Q Cycle Activity:

Q1	Q2	Q3	Q4
Decode	Read register 'f'	Process Data	No operation

If skip:

Q1	Q2	Q3	Q4
No operation	No operation	No operation	No operation

If skip and followed by 2-word instruction:

Q1	Q2	Q3	Q4
No operation	No operation	No operation	No operation
No operation	No operation	No operation	No operation

Example:

```
HERE    CPFSLT REG, 1
NLESS   :
LESS    :
```

Before Instruction
PC = Address (HERE)
W = ?
After Instruction
If REG < W;
PC = Address (LESS)
If REG ≥ W;
PC = Address (NLESS)

© 2010-2016 Microchip Technology Inc.

DAW — Decimal Adjust W Register

Syntax: DAW

Operands: None

Operation: If [W<3:0> > 9] or [DC = 1] then
(W<3:0>) + 6 → W<3:0>;
else
(W<3:0>) → W<3:0>;

If [W<7:4> + DC > 9] or [C = 1] then
(W<7:4>) + 6 + DC → W<7:4> ;
else
(W<7:4>) + DC → W<7:4>

Status Affected: C

Encoding:

0000	0000	0000	0111

Description: DAW adjusts the 8-bit value in W, resulting from the earlier addition of two variables (each in packed BCD format) and produces a correct packed BCD result.

Words: 1

Cycles: 1

Q Cycle Activity:

Q1	Q2	Q3	Q4
Decode	Read register W	Process Data	Write W

Example1:

```
DAW
```

Before Instruction

W = A5h
C = 0
DC = 0

After Instruction

W = 05h
C = 1
DC = 0

Example 2:

Before Instruction

W = CEh
C = 0
DC = 0

After Instruction

W = 34h
C = 1
DC = 0

DECF — Decrement f

Syntax: DECF f {,d {,a}}

Operands: 0 ≤ f ≤ 255
d ∈ [0,1]
a ∈ [0,1]

Operation: (f) – 1 → dest

Status Affected: C, DC, N, OV, Z

Encoding:

0000	01da	ffff	ffff

Description: Decrement register ‘f’. If ‘d’ is ‘0’, the result is stored in W. If ‘d’ is ‘1’, the result is stored back in register ‘f’ (default).
If ‘a’ is ‘0’, the Access Bank is selected. If ‘a’ is ‘1’, the BSR is used to select the GPR bank.
If ‘a’ is ‘0’ and the extended instruction set is enabled, this instruction operates in Indexed Literal Offset Addressing mode whenever f ≤ 95 (5Fh). See **Section 25.2.3 “Byte-Oriented and Bit-Oriented Instructions in Indexed Literal Offset Mode”** for details.

Words: 1

Cycles: 1

Q Cycle Activity:

Q1	Q2	Q3	Q4
Decode	Read register ‘f’	Process Data	Write to destination

Example: `DECF CNT, 1, 0`

Before Instruction

CNT = 01h
Z = 0

After Instruction

CNT = 00h
Z = 1

DECFSZ — Decrement f, skip if 0

Syntax:	DECFSZ f {,d {,a}}
Operands:	$0 \le f \le 255$ $d \in [0,1]$ $a \in [0,1]$
Operation:	(f) – 1 → dest, skip if result = 0
Status Affected:	None
Encoding:	0010 | 11da | ffff | ffff
Description:	The contents of register 'f' are decremented. If 'd' is '0', the result is placed in W. If 'd' is '1', the result is placed back in register 'f' (default). If the result is '0', the next instruction, which is already fetched, is discarded and a NOP is executed instead, making it a 2-cycle instruction. If 'a' is '0', the Access Bank is selected. If 'a' is '1', the BSR is used to select the GPR bank. If 'a' is '0' and the extended instruction set is enabled, this instruction operates in Indexed Literal Offset Addressing mode whenever $f \le 95$ (5Fh). See **Section 25.2.3 "Byte-Oriented and Bit-Oriented Instructions in Indexed Literal Offset Mode"** for details.
Words:	1
Cycles:	1(2) **Note:** 3 cycles if skip and followed by a 2-word instruction.

Q Cycle Activity:

Q1	Q2	Q3	Q4
Decode	Read register 'f'	Process Data	Write to destination

If skip:

Q1	Q2	Q3	Q4
No operation	No operation	No operation	No operation

If skip and followed by 2-word instruction:

Q1	Q2	Q3	Q4
No operation	No operation	No operation	No operation
No operation	No operation	No operation	No operation

Example:

```
HERE      DECFSZ   CNT, 1, 1
          GOTO     LOOP
CONTINUE
```

Before Instruction
PC = Address (HERE)
After Instruction
CNT = CNT - 1
If CNT = 0;
PC = Address (CONTINUE)
If CNT ≠ 0;
PC = Address (HERE + 2)

DCFSNZ — Decrement f, skip if not 0

Syntax:	DCFSNZ f {,d {,a}}
Operands:	$0 \le f \le 255$ $d \in [0,1]$ $a \in [0,1]$
Operation:	(f) – 1 → dest, skip if result ≠ 0
Status Affected:	None
Encoding:	0100 | 11da | ffff | ffff
Description:	The contents of register 'f' are decremented. If 'd' is '0', the result is placed in W. If 'd' is '1', the result is placed back in register 'f' (default). If the result is not '0', the next instruction, which is already fetched, is discarded and a NOP is executed instead, making it a 2-cycle instruction. If 'a' is '0', the Access Bank is selected. If 'a' is '1', the BSR is used to select the GPR bank. If 'a' is '0' and the extended instruction set is enabled, this instruction operates in Indexed Literal Offset Addressing mode whenever $f \le 95$ (5Fh). See **Section 25.2.3 "Byte-Oriented and Bit-Oriented Instructions in Indexed Literal Offset Mode"** for details.
Words:	1
Cycles:	1(2) **Note:** 3 cycles if skip and followed by a 2-word instruction.

Q Cycle Activity:

Q1	Q2	Q3	Q4
Decode	Read register 'f'	Process Data	Write to destination

If skip:

Q1	Q2	Q3	Q4
No operation	No operation	No operation	No operation

If skip and followed by 2-word instruction:

Q1	Q2	Q3	Q4
No operation	No operation	No operation	No operation
No operation	No operation	No operation	No operation

Example:

```
HERE     DCFSNZ   TEMP, 1, 0
ZERO     :
NZERO    :
```

Before Instruction
TEMP = ?
After Instruction
TEMP = TEMP – 1,
If TEMP = 0;
PC = Address (ZERO)
If TEMP ≠ 0;
PC = Address (NZERO)

© 2010-2016 Microchip Technology Inc.

GOTO — Unconditional Branch

Syntax:	GOTO k
Operands:	$0 \le k \le 1048575$
Operation:	$k \rightarrow PC<20:1>$
Status Affected:	None

Encoding:

1st word (k<7:0>)	1110	1111	$k_7$kkk	kkkk$_0$
2nd word(k<19:8>)	1111	k_{19}kkk	kkkk	kkkk$_8$

Description: GOTO allows an unconditional branch anywhere within entire 2-Mbyte memory range. The 20-bit value ‘k’ is loaded into PC<20:1>. GOTO is always a 2-cycle instruction.

Words:	2
Cycles:	2

Q Cycle Activity:

Q1	Q2	Q3	Q4
Decode	Read literal ‘k’<7:0>,	No operation	Read literal ‘k’<19:8>, Write to PC
No operation	No operation	No operation	No operation

Example: `GOTO THERE`

After Instruction
PC = Address (THERE)

INCF — Increment f

Syntax:	INCF f {,d {,a}}
Operands:	$0 \le f \le 255$ $d \in [0,1]$ $a \in [0,1]$
Operation:	(f) + 1 → dest
Status Affected:	C, DC, N, OV, Z

Encoding:

0010	10da	ffff	ffff

Description: The contents of register ‘f’ are incremented. If ‘d’ is ‘0’, the result is placed in W. If ‘d’ is ‘1’, the result is placed back in register ‘f’ (default). If ‘a’ is ‘0’, the Access Bank is selected. If ‘a’ is ‘1’, the BSR is used to select the GPR bank. If ‘a’ is ‘0’ and the extended instruction set is enabled, this instruction operates in Indexed Literal Offset Addressing mode whenever $f \le 95$ (5Fh). See **Section 25.2.3 “Byte-Oriented and Bit-Oriented Instructions in Indexed Literal Offset Mode”** for details.

Words:	1
Cycles:	1

Q Cycle Activity:

Q1	Q2	Q3	Q4
Decode	Read register ‘f’	Process Data	Write to destination

Example: `INCF CNT, 1, 0`

Before Instruction
CNT = FFh
Z = 0
C = ?
DC = ?

After Instruction
CNT = 00h
Z = 1
C = 1
DC = 1

INCFSZ — Increment f, skip if 0

Syntax: INCFSZ f {,d {,a}}

Operands: $0 \le f \le 255$
$d \in [0,1]$
$a \in [0,1]$

Operation: (f) + 1 → dest,
skip if result = 0

Status Affected: None

Encoding:

0011	11da	ffff	ffff

Description: The contents of register 'f' are incremented. If 'd' is '0', the result is placed in W. If 'd' is '1', the result is placed back in register 'f' (default).
If the result is '0', the next instruction, which is already fetched, is discarded and a NOP is executed instead, making it a 2-cycle instruction.
If 'a' is '0', the Access Bank is selected. If 'a' is '1', the BSR is used to select the GPR bank.
If 'a' is '0' and the extended instruction set is enabled, this instruction operates in Indexed Literal Offset Addressing mode whenever $f \le 95$ (5Fh). See **Section 25.2.3 "Byte-Oriented and Bit-Oriented Instructions in Indexed Literal Offset Mode"** for details.

Words: 1

Cycles: 1(2)
Note: 3 cycles if skip and followed by a 2-word instruction.

Q Cycle Activity:

Q1	Q2	Q3	Q4
Decode	Read register 'f'	Process Data	Write to destination

If skip:

Q1	Q2	Q3	Q4
No operation	No operation	No operation	No operation

If skip and followed by 2-word instruction:

Q1	Q2	Q3	Q4
No operation	No operation	No operation	No operation
No operation	No operation	No operation	No operation

Example:

```
HERE    INCFSZ   CNT, 1, 0
NZERO   :
ZERO    :
```

Before Instruction
PC = Address (HERE)
After Instruction
CNT = CNT + 1
If CNT = 0;
PC = Address (ZERO)
If CNT ≠ 0;
PC = Address (NZERO)

INFSNZ — Increment f, skip if not 0

Syntax: INFSNZ f {,d {,a}}

Operands: $0 \le f \le 255$
$d \in [0,1]$
$a \in [0,1]$

Operation: (f) + 1 → dest,
skip if result ≠ 0

Status Affected: None

Encoding:

0100	10da	ffff	ffff

Description: The contents of register 'f' are incremented. If 'd' is '0', the result is placed in W. If 'd' is '1', the result is placed back in register 'f' (default).
If the result is not '0', the next instruction, which is already fetched, is discarded and a NOP is executed instead, making it a 2-cycle instruction.
If 'a' is '0', the Access Bank is selected. If 'a' is '1', the BSR is used to select the GPR bank.
If 'a' is '0' and the extended instruction set is enabled, this instruction operates in Indexed Literal Offset Addressing mode whenever $f \le 95$ (5Fh). See **Section 25.2.3 "Byte-Oriented and Bit-Oriented Instructions in Indexed Literal Offset Mode"** for details.

Words: 1

Cycles: 1(2)
Note: 3 cycles if skip and followed by a 2-word instruction.

Q Cycle Activity:

Q1	Q2	Q3	Q4
Decode	Read register 'f'	Process Data	Write to destination

If skip:

Q1	Q2	Q3	Q4
No operation	No operation	No operation	No operation

If skip and followed by 2-word instruction:

Q1	Q2	Q3	Q4
No operation	No operation	No operation	No operation
No operation	No operation	No operation	No operation

Example:

```
HERE    INFSNZ   REG, 1, 0
ZERO
NZERO
```

Before Instruction
PC = Address (HERE)
After Instruction
REG = REG + 1
If REG ≠ 0;
PC = Address (NZERO)
If REG = 0;
PC = Address (ZERO)

© 2010-2016 Microchip Technology Inc.

IORLW — Inclusive OR literal with W

Syntax:	IORLW k
Operands:	$0 \le k \le 255$
Operation:	(W) .OR. k → W
Status Affected:	N, Z
Encoding:	0000 | 1001 | kkkk | kkkk
Description:	The contents of W are ORed with the 8-bit literal 'k'. The result is placed in W.
Words:	1
Cycles:	1

Q Cycle Activity:

Q1	Q2	Q3	Q4
Decode	Read literal 'k'	Process Data	Write to W

Example: `IORLW 35h`

Before Instruction
W = 9Ah
After Instruction
W = BFh

IORWF — Inclusive OR W with f

Syntax:	IORWF f {,d {,a}}
Operands:	$0 \le f \le 255$ $d \in [0,1]$ $a \in [0,1]$
Operation:	(W) .OR. (f) → dest
Status Affected:	N, Z
Encoding:	0001 | 00da | ffff | ffff
Description:	Inclusive OR W with register 'f'. If 'd' is '0', the result is placed in W. If 'd' is '1', the result is placed back in register 'f' (default). If 'a' is '0', the Access Bank is selected. If 'a' is '1', the BSR is used to select the GPR bank. If 'a' is '0' and the extended instruction set is enabled, this instruction operates in Indexed Literal Offset Addressing mode whenever $f \le 95$ (5Fh). See **Section 25.2.3 "Byte-Oriented and Bit-Oriented Instructions in Indexed Literal Offset Mode"** for details.
Words:	1
Cycles:	1

Q Cycle Activity:

Q1	Q2	Q3	Q4
Decode	Read register 'f'	Process Data	Write to destination

Example: `IORWF RESULT, 0, 1`

Before Instruction
RESULT = 13h
W = 91h
After Instruction
RESULT = 13h
W = 93h

LFSR — Load FSR

Syntax:	LFSR f, k
Operands:	$0 \le f \le 2$ $0 \le k \le 4095$
Operation:	$k \rightarrow FSRf$
Status Affected:	None
Encoding:	1110 1111 | 1110 0000 | 00ff $k_7$kkk | k_{11}kkk kkkk
Description:	The 12-bit literal 'k' is loaded into the File Select Register pointed to by 'f'.
Words:	2
Cycles:	2

Q Cycle Activity:

Q1	Q2	Q3	Q4
Decode	Read literal 'k' MSB	Process Data	Write literal 'k' MSB to FSRfH
Decode	Read literal 'k' LSB	Process Data	Write literal 'k' to FSRfL

Example: `LFSR 2, 3ABh`

After Instruction
FSR2H = 03h
FSR2L = ABh

MOVF — Move f

Syntax:	MOVF f {,d {,a}}
Operands:	$0 \le f \le 255$ $d \in [0,1]$ $a \in [0,1]$
Operation:	$f \rightarrow dest$
Status Affected:	N, Z
Encoding:	0101 | 00da | ffff | ffff
Description:	The contents of register 'f' are moved to a destination dependent upon the status of 'd'. If 'd' is '0', the result is placed in W. If 'd' is '1', the result is placed back in register 'f' (default). Location 'f' can be anywhere in the 256-byte bank. If 'a' is '0', the Access Bank is selected. If 'a' is '1', the BSR is used to select the GPR bank. If 'a' is '0' and the extended instruction set is enabled, this instruction operates in Indexed Literal Offset Addressing mode whenever $f \le 95$ (5Fh). See **Section 25.2.3 "Byte-Oriented and Bit-Oriented Instructions in Indexed Literal Offset Mode"** for details.
Words:	1
Cycles:	1

Q Cycle Activity:

Q1	Q2	Q3	Q4
Decode	Read register 'f'	Process Data	Write W

Example: `MOVF REG, 0, 0`

Before Instruction
REG = 22h
W = FFh
After Instruction
REG = 22h
W = 22h

© 2010-2016 Microchip Technology Inc.

MOVFF — Move f to f

Syntax:	MOVFF f_s,f_d
Operands:	$0 \le f_s \le 4095$ $0 \le f_d \le 4095$
Operation:	$(f_s) \rightarrow f_d$
Status Affected:	None
Encoding: 1st word (source) 2nd word (destin.)	1100 ffff ffff $ffff_s$ 1111 ffff ffff $ffff_d$
Description:	The contents of source register 'f_s' are moved to destination register 'f_d'. Location of source 'f_s' can be anywhere in the 4096-byte data space (000h to FFFh) and location of destination 'f_d' can also be anywhere from 000h to FFFh. Either source or destination can be W (a useful special situation). MOVFF is particularly useful for transferring a data memory location to a peripheral register (such as the transmit buffer or an I/O port). The MOVFF instruction cannot use the PCL, TOSU, TOSH or TOSL as the destination register.
Words:	2
Cycles:	2 (3)

Q Cycle Activity:

Q1	Q2	Q3	Q4
Decode	Read register 'f' (src)	Process Data	No operation
Decode	No operation No dummy read	No operation	Write register 'f' (dest)

Example: `MOVFF REG1, REG2`

Before Instruction
REG1 = 33h
REG2 = 11h
After Instruction
REG1 = 33h
REG2 = 33h

MOVLB — Move literal to low nibble in BSR

Syntax:	MOVLW k
Operands:	$0 \le k \le 255$
Operation:	$k \rightarrow$ BSR
Status Affected:	None
Encoding:	0000 0001 kkkk kkkk
Description:	The 8-bit literal 'k' is loaded into the Bank Select Register (BSR). The value of BSR<7:4> always remains '0', regardless of the value of k_7:k_4.
Words:	1
Cycles:	1

Q Cycle Activity:

Q1	Q2	Q3	Q4
Decode	Read literal 'k'	Process Data	Write literal 'k' to BSR

Example: `MOVLB 5`

Before Instruction
BSR Register = 02h
After Instruction
BSR Register = 05h

MOVLW — Move literal to W

Syntax:	MOVLW k
Operands:	$0 \le k \le 255$
Operation:	$k \rightarrow W$
Status Affected:	None
Encoding:	0000 | 1110 | kkkk | kkkk
Description:	The 8-bit literal 'k' is loaded into W.
Words:	1
Cycles:	1

Q Cycle Activity:

Q1	Q2	Q3	Q4
Decode	Read literal 'k'	Process Data	Write to W

Example: `MOVLW 5Ah`

After Instruction

W = 5Ah

MOVWF — Move W to f

Syntax:	MOVWF f {,a}
Operands:	$0 \le f \le 255$ $a \in [0,1]$
Operation:	$(W) \rightarrow f$
Status Affected:	None
Encoding:	0110 | 111a | ffff | ffff
Description:	Move data from W to register 'f'. Location 'f' can be anywhere in the 256-byte bank. If 'a' is '0', the Access Bank is selected. If 'a' is '1', the BSR is used to select the GPR bank. If 'a' is '0' and the extended instruction set is enabled, this instruction operates in Indexed Literal Offset Addressing mode whenever $f \le 95$ (5Fh). See **Section 25.2.3 "Byte-Oriented and Bit-Oriented Instructions in Indexed Literal Offset Mode"** for details.
Words:	1
Cycles:	1

Q Cycle Activity:

Q1	Q2	Q3	Q4
Decode	Read register 'f'	Process Data	Write register 'f'

Example: `MOVWF REG, 0`

Before Instruction

W = 4Fh
REG = FFh

After Instruction

W = 4Fh
REG = 4Fh

© 2010-2016 Microchip Technology Inc.

MULLW — Multiply literal with W

Syntax:	MULLW k
Operands:	$0 \le k \le 255$
Operation:	(W) x k → PRODH:PRODL
Status Affected:	None
Encoding:	0000 | 1101 | kkkk | kkkk
Description:	An unsigned multiplication is carried out between the contents of W and the 8-bit literal 'k'. The 16-bit result is placed in the PRODH:PRODL register pair. PRODH contains the high byte. W is unchanged. None of the Status flags are affected. Note that neither overflow nor carry is possible in this operation. A zero result is possible but not detected.
Words:	1
Cycles:	1

Q Cycle Activity:

Q1	Q2	Q3	Q4
Decode	Read literal 'k'	Process Data	Write registers PRODH: PRODL

Example: `MULLW 0C4h`

Before Instruction

W = E2h
PRODH = ?
PRODL = ?

After Instruction

W = E2h
PRODH = ADh
PRODL = 08h

MULWF — Multiply W with f

Syntax:	MULWF f {,a}
Operands:	$0 \le f \le 255$ $a \in [0,1]$
Operation:	(W) x (f) → PRODH:PRODL
Status Affected:	None
Encoding:	0000 | 001a | ffff | ffff
Description:	An unsigned multiplication is carried out between the contents of W and the register file location 'f'. The 16-bit result is stored in the PRODH:PRODL register pair. PRODH contains the high byte. Both W and 'f' are unchanged. None of the Status flags are affected. Note that neither overflow nor carry is possible in this operation. A zero result is possible but not detected. If 'a' is '0', the Access Bank is selected. If 'a' is '1', the BSR is used to select the GPR bank. If 'a' is '0' and the extended instruction set is enabled, this instruction operates in Indexed Literal Offset Addressing mode whenever $f \le 95$ (5Fh). See **Section 25.2.3 "Byte-Oriented and Bit-Oriented Instructions in Indexed Literal Offset Mode"** for details.
Words:	1
Cycles:	1

Q Cycle Activity:

Q1	Q2	Q3	Q4
Decode	Read register 'f'	Process Data	Write registers PRODH: PRODL

Example: `MULWF REG, 1`

Before Instruction

W = C4h
REG = B5h
PRODH = ?
PRODL = ?

After Instruction

W = C4h
REG = B5h
PRODH = 8Ah
PRODL = 94h

NEGF — Negate f

Syntax:	NEGF f {,a}
Operands:	$0 \le f \le 255$ $a \in [0,1]$
Operation:	$(\overline{f}) + 1 \rightarrow f$
Status Affected:	N, OV, C, DC, Z
Encoding:	0110 | 110a | ffff | ffff
Description:	Location ‘f’ is negated using two’s complement. The result is placed in the data memory location ‘f’. If ‘a’ is ‘0’, the Access Bank is selected. If ‘a’ is ‘1’, the BSR is used to select the GPR bank. If ‘a’ is ‘0’ and the extended instruction set is enabled, this instruction operates in Indexed Literal Offset Addressing mode whenever $f \le 95$ (5Fh). See **Section 25.2.3 “Byte-Oriented and Bit-Oriented Instructions in Indexed Literal Offset Mode”** for details.
Words:	1
Cycles:	1

Q Cycle Activity:

Q1	Q2	Q3	Q4
Decode	Read register ‘f’	Process Data	Write register ‘f’

Example: `NEGF REG, 1`

Before Instruction
REG = 0011 1010 [3Ah]
After Instruction
REG = 1100 0110 [C6h]

NOP — No Operation

Syntax:	NOP
Operands:	None
Operation:	No operation
Status Affected:	None
Encoding:	0000 1111 | 0000 xxxx | 0000 xxxx | 0000 xxxx
Description:	No operation.
Words:	1
Cycles:	1

Q Cycle Activity:

Q1	Q2	Q3	Q4
Decode	No operation	No operation	No operation

Example:

None.

© 2010-2016 Microchip Technology Inc.

POP — Pop Top of Return Stack

Syntax:	POP
Operands:	None
Operation:	(TOS) → bit bucket
Status Affected:	None
Encoding:	0000 | 0000 | 0000 | 0110
Description:	The TOS value is pulled off the return stack and is discarded. The TOS value then becomes the previous value that was pushed onto the return stack. This instruction is provided to enable the user to properly manage the return stack to incorporate a software stack.
Words:	1
Cycles:	1

Q Cycle Activity:

Q1	Q2	Q3	Q4
Decode	No operation	POP TOS value	No operation

Example: `POP`
`GOTO NEW`

Before Instruction
TOS = 0031A2h
Stack (1 level down) = 014332h

After Instruction
TOS = 014332h
PC = NEW

PUSH — Push Top of Return Stack

Syntax:	PUSH
Operands:	None
Operation:	(PC + 2) → TOS
Status Affected:	None
Encoding:	0000 | 0000 | 0000 | 0101
Description:	The PC + 2 is pushed onto the top of the return stack. The previous TOS value is pushed down on the stack. This instruction allows implementing a software stack by modifying TOS and then pushing it onto the return stack.
Words:	1
Cycles:	1

Q Cycle Activity:

Q1	Q2	Q3	Q4
Decode	PUSH PC + 2 onto return stack	No operation	No operation

Example: `PUSH`

Before Instruction
TOS = 345Ah
PC = 0124h

After Instruction
PC = 0126h
TOS = 0126h
Stack (1 level down) = 345Ah

RCALL — Relative Call

Syntax:	RCALL n
Operands:	$-1024 \le n \le 1023$
Operation:	(PC) + 2 → TOS, (PC) + 2 + 2n → PC
Status Affected:	None
Encoding:	1101 | 1nnn | nnnn | nnnn
Description:	Subroutine call with a jump up to 1K from the current location. First, return address (PC + 2) is pushed onto the stack. Then, add the 2's complement number '2n' to the PC. Since the PC will have incremented to fetch the next instruction, the new address will be PC + 2 + 2n. This instruction is a 2-cycle instruction.
Words:	1
Cycles:	2

Q Cycle Activity:

Q1	Q2	Q3	Q4
Decode	Read literal 'n' PUSH PC to stack	Process Data	Write to PC
No operation	No operation	No operation	No operation

Example: `HERE RCALL Jump`

Before Instruction
PC = Address (HERE)
After Instruction
PC = Address (Jump)
TOS = Address (HERE + 2)

RESET — Reset

Syntax:	RESET
Operands:	None
Operation:	Reset all registers and flags that are affected by a $\overline{\text{MCLR}}$ Reset.
Status Affected:	All
Encoding:	0000 | 0000 | 1111 | 1111
Description:	This instruction provides a way to execute a $\overline{\text{MCLR}}$ Reset by software.
Words:	1
Cycles:	1

Q Cycle Activity:

Q1	Q2	Q3	Q4
Decode	Start Reset	No operation	No operation

Example: `RESET`

After Instruction
Registers = Reset Value
Flags* = Reset Value

© 2010-2016 Microchip Technology Inc.

RETFIE — Return from Interrupt

Syntax:	RETFIE {s}
Operands:	s ∈ [0,1]
Operation:	(TOS) → PC, 1 → GIE/GIEH or PEIE/GIEL, if s = 1 (WS) → W, (STATUSS) → Status, (BSRS) → BSR, PCLATU, PCLATH are unchanged.
Status Affected:	GIE/GIEH, PEIE/GIEL.
Encoding:	0000 | 0000 | 0001 | 000s
Description:	Return from interrupt. Stack is popped and Top-of-Stack (TOS) is loaded into the PC. Interrupts are enabled by setting either the high or low priority global interrupt enable bit. If 's' = 1, the contents of the shadow registers, WS, STATUSS and BSRS, are loaded into their corresponding registers, W, STATUS and BSR. If 's' = 0, no update of these registers occurs (default).
Words:	1
Cycles:	2

Q Cycle Activity:

Q1	Q2	Q3	Q4
Decode	No operation	No operation	POP PC from stack Set GIEH or GIEL
No operation	No operation	No operation	No operation

Example: `RETFIE 1`

After Interrupt

PC	=	TOS
W	=	WS
BSR	=	BSRS
Status	=	STATUSS
GIE/GIEH, PEIE/GIEL	=	1

RETLW — Return literal to W

Syntax:	RETLW k
Operands:	0 ≤ k ≤ 255
Operation:	k → W, (TOS) → PC, PCLATU, PCLATH are unchanged
Status Affected:	None
Encoding:	0000 | 1100 | kkkk | kkkk
Description:	W is loaded with the 8-bit literal 'k'. The program counter is loaded from the top of the stack (the return address). The high address latch (PCLATH) remains unchanged.
Words:	1
Cycles:	2

Q Cycle Activity:

Q1	Q2	Q3	Q4
Decode	Read literal 'k'	Process Data	POP PC from stack, Write to W
No operation	No operation	No operation	No operation

Example:

```
    CALL TABLE  ; W contains table
                ; offset value
                ; W now has
                ; table value
    :
TABLE
    ADDWF PCL   ; W = offset
    RETLW k0    ; Begin table
    RETLW k1    ;
    :
    :
    RETLW kn    ; End of table
```

Before Instruction
W = 07h

After Instruction
W = value of kn

RETURN — Return from Subroutine

Syntax:	RETURN {s}
Operands:	s ∈ [0,1]
Operation:	(TOS) → PC, if s = 1 (WS) → W, (STATUSS) → Status, (BSRS) → BSR, PCLATU, PCLATH are unchanged
Status Affected:	None
Encoding:	0000 | 0000 | 0001 | 001s
Description:	Return from subroutine. The stack is popped and the top of the stack (TOS) is loaded into the program counter. If 's'= 1, the contents of the shadow registers, WS, STATUSS and BSRS, are loaded into their corresponding registers, W, STATUS and BSR. If 's' = 0, no update of these registers occurs (default).
Words:	1
Cycles:	2

Q Cycle Activity:

Q1	Q2	Q3	Q4
Decode	No operation	Process Data	POP PC from stack
No operation	No operation	No operation	No operation

Example: `RETURN`

After Instruction:
PC = TOS

RLCF — Rotate Left f through Carry

Syntax:	RLCF f {,d {,a}}
Operands:	0 ≤ f ≤ 255 d ∈ [0,1] a ∈ [0,1]
Operation:	(f<n>) → dest<n + 1>, (f<7>) → C, (C) → dest<0>
Status Affected:	C, N, Z
Encoding:	0011 | 01da | ffff | ffff
Description:	The contents of register 'f' are rotated one bit to the left through the CARRY flag. If 'd' is '0', the result is placed in W. If 'd' is '1', the result is stored back in register 'f' (default). If 'a' is '0', the Access Bank is selected. If 'a' is '1', the BSR is used to select the GPR bank. If 'a' is '0' and the extended instruction set is enabled, this instruction operates in Indexed Literal Offset Addressing mode whenever f ≤ 95 (5Fh). See **Section 25.2.3 "Byte-Oriented and Bit-Oriented Instructions in Indexed Literal Offset Mode"** for details.

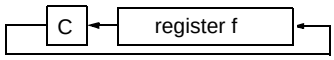

Words:	1
Cycles:	1

Q Cycle Activity:

Q1	Q2	Q3	Q4
Decode	Read register 'f'	Process Data	Write to destination

Example: `RLCF REG, 0, 0`

Before Instruction
REG = 1110 0110
C = 0
After Instruction
REG = 1110 0110
W = 1100 1100
C = 1

© 2010-2016 Microchip Technology Inc.

RLNCF — Rotate Left f (No Carry)

Syntax:	RLNCF f {,d {,a}}
Operands:	$0 \le f \le 255$ $d \in [0,1]$ $a \in [0,1]$
Operation:	(f<n>) → dest<n + 1>, (f<7>) → dest<0>
Status Affected:	N, Z
Encoding:	0100 | 01da | ffff | ffff
Description:	The contents of register 'f' are rotated one bit to the left. If 'd' is '0', the result is placed in W. If 'd' is '1', the result is stored back in register 'f' (default). If 'a' is '0', the Access Bank is selected. If 'a' is '1', the BSR is used to select the GPR bank. If 'a' is '0' and the extended instruction set is enabled, this instruction operates in Indexed Literal Offset Addressing mode whenever $f \le 95$ (5Fh). See **Section 25.2.3 "Byte-Oriented and Bit-Oriented Instructions in Indexed Literal Offset Mode"** for details.

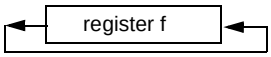

Words:	1
Cycles:	1

Q Cycle Activity:

Q1	Q2	Q3	Q4
Decode	Read register 'f'	Process Data	Write to destination

Example: `RLNCF REG, 1, 0`

Before Instruction
REG = 1010 1011
After Instruction
REG = 0101 0111

RRCF — Rotate Right f through Carry

Syntax:	RRCF f {,d {,a}}
Operands:	$0 \le f \le 255$ $d \in [0,1]$ $a \in [0,1]$
Operation:	(f<n>) → dest<n – 1>, (f<0>) → C, (C) → dest<7>
Status Affected:	C, N, Z
Encoding:	0011 | 00da | ffff | ffff
Description:	The contents of register 'f' are rotated one bit to the right through the CARRY flag. If 'd' is '0', the result is placed in W. If 'd' is '1', the result is placed back in register 'f' (default). If 'a' is '0', the Access Bank is selected. If 'a' is '1', the BSR is used to select the GPR bank. If 'a' is '0' and the extended instruction set is enabled, this instruction operates in Indexed Literal Offset Addressing mode whenever $f \le 95$ (5Fh). See **Section 25.2.3 "Byte-Oriented and Bit-Oriented Instructions in Indexed Literal Offset Mode"** for details.

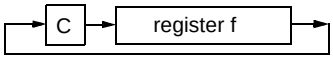

Words:	1
Cycles:	1

Q Cycle Activity:

Q1	Q2	Q3	Q4
Decode	Read register 'f'	Process Data	Write to destination

Example: `RRCF REG, 0, 0`

Before Instruction
REG = 1110 0110
C = 0
After Instruction
REG = 1110 0110
W = 0111 0011
C = 0

RRNCF — Rotate Right f (No Carry)

Syntax:	RRNCF f {,d {,a}}
Operands:	$0 \le f \le 255$ $d \in [0,1]$ $a \in [0,1]$
Operation:	(f<n>) → dest<n – 1>, (f<0>) → dest<7>
Status Affected:	N, Z
Encoding:	0100 | 00da | ffff | ffff
Description:	The contents of register 'f' are rotated one bit to the right. If 'd' is '0', the result is placed in W. If 'd' is '1', the result is placed back in register 'f' (default). If 'a' is '0', the Access Bank will be selected (default), overriding the BSR value. If 'a' is '1', then the bank will be selected as per the BSR value. If 'a' is '0' and the extended instruction set is enabled, this instruction operates in Indexed Literal Offset Addressing mode whenever $f \le 95$ (5Fh). See **Section 25.2.3 "Byte-Oriented and Bit-Oriented Instructions in Indexed Literal Offset Mode"** for details.

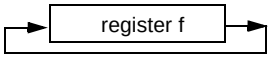

Words:	1
Cycles:	1

Q Cycle Activity:

Q1	Q2	Q3	Q4
Decode	Read register 'f'	Process Data	Write to destination

Example 1: `RRNCF REG, 1, 0`

Before Instruction
REG = 1101 0111
After Instruction
REG = 1110 1011

Example 2: `RRNCF REG, 0, 0`

Before Instruction
W = ?
REG = 1101 0111
After Instruction
W = 1110 1011
REG = 1101 0111

SETF — Set f

Syntax:	SETF f {,a}
Operands:	$0 \le f \le 255$ $a \in [0,1]$
Operation:	FFh → f
Status Affected:	None
Encoding:	0110 | 100a | ffff | ffff
Description:	The contents of the specified register are set to FFh. If 'a' is '0', the Access Bank is selected. If 'a' is '1', the BSR is used to select the GPR bank. If 'a' is '0' and the extended instruction set is enabled, this instruction operates in Indexed Literal Offset Addressing mode whenever $f \le 95$ (5Fh). See **Section 25.2.3 "Byte-Oriented and Bit-Oriented Instructions in Indexed Literal Offset Mode"** for details.
Words:	1
Cycles:	1

Q Cycle Activity:

Q1	Q2	Q3	Q4
Decode	Read register 'f'	Process Data	Write register 'f'

Example: `SETF REG, 1`

Before Instruction
REG = 5Ah
After Instruction
REG = FFh

© 2010-2016 Microchip Technology Inc.

SLEEP — Enter Sleep mode

Syntax:	SLEEP
Operands:	None
Operation:	00h → WDT, 0 → WDT postscaler, 1 → $\overline{TO}$, 0 → $\overline{PD}$
Status Affected:	$\overline{TO}$, $\overline{PD}$
Encoding:	0000 | 0000 | 0000 | 0011
Description:	The Power-down Status bit ($\overline{PD}$) is cleared. The Time-out Status bit ($\overline{TO}$) is set. Watchdog Timer and its postscaler are cleared. The processor is put into Sleep mode with the oscillator stopped.
Words:	1
Cycles:	1

Q Cycle Activity:

Q1	Q2	Q3	Q4
Decode	No operation	Process Data	Go to Sleep

Example: `SLEEP`

Before Instruction
$\overline{TO}$ = ?
$\overline{PD}$ = ?

After Instruction
$\overline{TO}$ = 1 †
$\overline{PD}$ = 0

† If WDT causes wake-up, this bit is cleared.

SUBFWB — Subtract f from W with borrow

Syntax:	SUBFWB f {,d {,a}}
Operands:	$0 \le f \le 255$ $d \in [0,1]$ $a \in [0,1]$
Operation:	(W) – (f) – ($\overline{C}$) → dest
Status Affected:	N, OV, C, DC, Z
Encoding:	0101 | 01da | ffff | ffff
Description:	Subtract register ‘f’ and CARRY flag (borrow) from W (2’s complement method). If ‘d’ is ‘0’, the result is stored in W. If ‘d’ is ‘1’, the result is stored in register ‘f’ (default). If ‘a’ is ‘0’, the Access Bank is selected. If ‘a’ is ‘1’, the BSR is used to select the GPR bank. If ‘a’ is ‘0’ and the extended instruction set is enabled, this instruction operates in Indexed Literal Offset Addressing mode whenever $f \le 95$ (5Fh). See **Section 25.2.3 “Byte-Oriented and Bit-Oriented Instructions in Indexed Literal Offset Mode”** for details.
Words:	1
Cycles:	1

Q Cycle Activity:

Q1	Q2	Q3	Q4
Decode	Read register ‘f’	Process Data	Write to destination

Example 1: `SUBFWB REG, 1, 0`

Before Instruction
REG = 3
W = 2
C = 1

After Instruction
REG = FF
W = 2
C = 0
Z = 0
N = 1 ; result is negative

Example 2: `SUBFWB REG, 0, 0`

Before Instruction
REG = 2
W = 5
C = 1

After Instruction
REG = 2
W = 3
C = 1
Z = 0
N = 0 ; result is positive

Example 3: `SUBFWB REG, 1, 0`

Before Instruction
REG = 1
W = 2
C = 0

After Instruction
REG = 0
W = 2
C = 1
Z = 1 ; result is zero
N = 0

SUBLW — Subtract W from literal

Syntax:	SUBLW k
Operands:	$0 \le k \le 255$
Operation:	k – (W) → W
Status Affected:	N, OV, C, DC, Z
Encoding:	0000 | 1000 | kkkk | kkkk
Description	W is subtracted from the 8-bit literal ‘k’. The result is placed in W.
Words:	1
Cycles:	1

Q Cycle Activity:

Q1	Q2	Q3	Q4
Decode	Read literal ‘k’	Process Data	Write to W

Example 1: `SUBLW 02h`

```
Before Instruction
    W   =   01h
    C   =   ?
After Instruction
    W   =   01h
    C   =   1     ; result is positive
    Z   =   0
    N   =   0
```

Example 2: `SUBLW 02h`

```
Before Instruction
    W   =   02h
    C   =   ?
After Instruction
    W   =   00h
    C   =   1     ; result is zero
    Z   =   1
    N   =   0
```

Example 3: `SUBLW 02h`

```
Before Instruction
    W   =   03h
    C   =   ?
After Instruction
    W   =   FFh   ; (2's complement)
    C   =   0     ; result is negative
    Z   =   0
    N   =   1
```

SUBWF — Subtract W from f

Syntax:	SUBWF f {,d {,a}}
Operands:	$0 \le f \le 255$ $d \in [0,1]$ $a \in [0,1]$
Operation:	(f) – (W) → dest
Status Affected:	N, OV, C, DC, Z
Encoding:	0101 | 11da | ffff | ffff
Description:	Subtract W from register ‘f’ (2’s complement method). If ‘d’ is ‘0’, the result is stored in W. If ‘d’ is ‘1’, the result is stored back in register ‘f’ (default). If ‘a’ is ‘0’, the Access Bank is selected. If ‘a’ is ‘1’, the BSR is used to select the GPR bank. If ‘a’ is ‘0’ and the extended instruction set is enabled, this instruction operates in Indexed Literal Offset Addressing mode whenever $f \le 95$ (5Fh). See **Section 25.2.3 “Byte-Oriented and Bit-Oriented Instructions in Indexed Literal Offset Mode”** for details.
Words:	1
Cycles:	1

Q Cycle Activity:

Q1	Q2	Q3	Q4
Decode	Read register ‘f’	Process Data	Write to destination

Example 1: `SUBWF REG, 1, 0`

```
Before Instruction
    REG   =   3
    W     =   2
    C     =   ?
After Instruction
    REG   =   1
    W     =   2
    C     =   1     ; result is positive
    Z     =   0
    N     =   0
```

Example 2: `SUBWF REG, 0, 0`

```
Before Instruction
    REG   =   2
    W     =   2
    C     =   ?
After Instruction
    REG   =   2
    W     =   0
    C     =   1     ; result is zero
    Z     =   1
    N     =   0
```

Example 3: `SUBWF REG, 1, 0`

```
Before Instruction
    REG   =   1
    W     =   2
    C     =   ?
After Instruction
    REG   =   FFh  ;(2's complement)
    W     =   2
    C     =   0     ; result is negative
    Z     =   0
    N     =   1
```


© 2010-2016 Microchip Technology Inc.

SUBWFB — Subtract W from f with Borrow

Syntax: SUBWFB f {,d {,a}}

Operands: $0 \le f \le 255$
$d \in [0,1]$
$a \in [0,1]$

Operation: (f) – (W) – ($\overline{C}$) → dest

Status Affected: N, OV, C, DC, Z

Encoding:

0101	10da	ffff	ffff

Description: Subtract W and the CARRY flag (borrow) from register 'f' (2's complement method). If 'd' is '0', the result is stored in W. If 'd' is '1', the result is stored back in register 'f' (default).
If 'a' is '0', the Access Bank is selected. If 'a' is '1', the BSR is used to select the GPR bank.
If 'a' is '0' and the extended instruction set is enabled, this instruction operates in Indexed Literal Offset Addressing mode whenever $f \le 95$ (5Fh). See **Section 25.2.3 "Byte-Oriented and Bit-Oriented Instructions in Indexed Literal Offset Mode"** for details.

Words: 1

Cycles: 1

Q Cycle Activity:

Q1	Q2	Q3	Q4
Decode	Read register 'f'	Process Data	Write to destination

Example 1: `SUBWFB REG, 1, 0`

```
Before Instruction
    REG  =  19h     (0001 1001)
    W    =  0Dh     (0000 1101)
    C    =  1
After Instruction
    REG  =  0Ch     (0000 1100)
    W    =  0Dh     (0000 1101)
    C    =  1
    Z    =  0
    N    =  0       ; result is positive
```

Example 2: `SUBWFB REG, 0, 0`

```
Before Instruction
    REG  =  1Bh     (0001 1011)
    W    =  1Ah     (0001 1010)
    C    =  0
After Instruction
    REG  =  1Bh     (0001 1011)
    W    =  00h
    C    =  1
    Z    =  1       ; result is zero
    N    =  0
```

Example 3: `SUBWFB REG, 1, 0`

```
Before Instruction
    REG  =  03h     (0000 0011)
    W    =  0Eh     (0000 1110)
    C    =  1
After Instruction
    REG  =  F5h     (1111 0101)
                    ; [2's comp]
    W    =  0Eh     (0000 1110)
    C    =  0
    Z    =  0
    N    =  1       ; result is negative
```

SWAPF — Swap f

Syntax: SWAPF f {,d {,a}}

Operands: $0 \le f \le 255$
$d \in [0,1]$
$a \in [0,1]$

Operation: (f<3:0>) → dest<7:4>,
(f<7:4>) → dest<3:0>

Status Affected: None

Encoding:

0011	10da	ffff	ffff

Description: The upper and lower nibbles of register 'f' are exchanged. If 'd' is '0', the result is placed in W. If 'd' is '1', the result is placed in register 'f' (default).
If 'a' is '0', the Access Bank is selected. If 'a' is '1', the BSR is used to select the GPR bank.
If 'a' is '0' and the extended instruction set is enabled, this instruction operates in Indexed Literal Offset Addressing mode whenever $f \le 95$ (5Fh). See **Section 25.2.3 "Byte-Oriented and Bit-Oriented Instructions in Indexed Literal Offset Mode"** for details.

Words: 1

Cycles: 1

Q Cycle Activity:

Q1	Q2	Q3	Q4
Decode	Read register 'f'	Process Data	Write to destination

Example: `SWAPF REG, 1, 0`

```
Before Instruction
    REG  =  53h
After Instruction
    REG  =  35h
```

TBLRD Table Read

Syntax: TBLRD (*; *+; *-; +*)

Operands: None

Operation: if TBLRD *,
(Prog Mem (TBLPTR)) → TABLAT;
TBLPTR – No Change;
if TBLRD *+,
(Prog Mem (TBLPTR)) → TABLAT;
(TBLPTR) + 1 → TBLPTR;
if TBLRD *-,
(Prog Mem (TBLPTR)) → TABLAT;
(TBLPTR) – 1 → TBLPTR;
if TBLRD +*,
(TBLPTR) + 1 → TBLPTR;
(Prog Mem (TBLPTR)) → TABLAT;

Status Affected: None

Encoding:

0000	0000	0000	10nn nn=0 * =1 *+ =2 *- =3 +*

Description: This instruction is used to read the contents of Program Memory (P.M.). To address the program memory, a pointer called Table Pointer (TBLPTR) is used.
The TBLPTR (a 21-bit pointer) points to each byte in the program memory. TBLPTR has a 2-Mbyte address range.

TBLPTR[0] = 0: Least Significant Byte of Program Memory Word

TBLPTR[0] = 1: Most Significant Byte of Program Memory Word

The TBLRD instruction can modify the value of TBLPTR as follows:

- no change
- post-increment
- post-decrement
- pre-increment

Words: 1

Cycles: 2

Q Cycle Activity:

Q1	Q2	Q3	Q4
Decode	No operation	No operation	No operation
No operation	No operation (Read Program Memory)	No operation	No operation (Write TABLAT)

TBLRD Table Read (Continued)

Example1: `TBLRD *+ ;`

Before Instruction
TABLAT = 55h
TBLPTR = 00A356h
MEMORY (00A356h) = 34h

After Instruction
TABLAT = 34h
TBLPTR = 00A357h

Example2: `TBLRD +* ;`

Before Instruction
TABLAT = AAh
TBLPTR = 01A357h
MEMORY (01A357h) = 12h
MEMORY (01A358h) = 34h

After Instruction
TABLAT = 34h
TBLPTR = 01A358h

© 2010-2016 Microchip Technology Inc.

TBLWT — Table Write

Syntax: TBLWT (*; *+; *-; +*)

Operands: None

Operation:
if TBLWT*,
(TABLAT) → Holding Register;
TBLPTR – No Change;
if TBLWT*+,
(TABLAT) → Holding Register;
(TBLPTR) + 1 → TBLPTR;
if TBLWT*-,
(TABLAT) → Holding Register;
(TBLPTR) – 1 → TBLPTR;
if TBLWT+*,
(TBLPTR) + 1 → TBLPTR;
(TABLAT) → Holding Register;

Status Affected: None

Encoding:

0000	0000	0000	11nn nn=0 * =1 *+ =2 *- =3 +*

Description: This instruction uses the three LSBs of TBLPTR to determine which of the eight holding registers the TABLAT is written to. The holding registers are used to program the contents of Program Memory (P.M.). (Refer to **Section 6.0 "Flash Program Memory"** for additional details on programming Flash memory.)
The TBLPTR (a 21-bit pointer) points to each byte in the program memory. TBLPTR has a 2-MByte address range. The LSb of the TBLPTR selects which byte of the program memory location to access.

TBLPTR[0] = 0: Least Significant Byte of Program Memory Word
TBLPTR[0] = 1: Most Significant Byte of Program Memory Word

The TBLWT instruction can modify the value of TBLPTR as follows:

- no change
- post-increment
- post-decrement
- pre-increment

Words: 1

Cycles: 2

Q Cycle Activity:

Q1	Q2	Q3	Q4
Decode	No operation	No operation	No operation
No operation	No operation (Read TABLAT)	No operation	No operation (Write to Holding Register)

TBLWT — Table Write (Continued)

Example1: `TBLWT *+;`

Before Instruction
TABLAT = 55h
TBLPTR = 00A356h
HOLDING REGISTER (00A356h) = FFh

After Instructions (table write completion)
TABLAT = 55h
TBLPTR = 00A357h
HOLDING REGISTER (00A356h) = 55h

Example 2: `TBLWT +*;`

Before Instruction
TABLAT = 34h
TBLPTR = 01389Ah
HOLDING REGISTER (01389Ah) = FFh
HOLDING REGISTER (01389Bh) = FFh

After Instruction (table write completion)
TABLAT = 34h
TBLPTR = 01389Bh
HOLDING REGISTER (01389Ah) = FFh
HOLDING REGISTER (01389Bh) = 34h

TSTFSZ — Test f, skip if 0

Syntax:	TSTFSZ f {,a}
Operands:	$0 \le f \le 255$ $a \in [0,1]$
Operation:	skip if f = 0
Status Affected:	None
Encoding:	0110 | 011a | ffff | ffff
Description:	If 'f' = 0, the next instruction fetched during the current instruction execution is discarded and a NOP is executed, making this a 2-cycle instruction. If 'a' is '0', the Access Bank is selected. If 'a' is '1', the BSR is used to select the GPR bank. If 'a' is '0' and the extended instruction set is enabled, this instruction operates in Indexed Literal Offset Addressing mode whenever $f \le 95$ (5Fh). See **Section 25.2.3 "Byte-Oriented and Bit-Oriented Instructions in Indexed Literal Offset Mode"** for details.
Words:	1
Cycles:	1(2) **Note:** 3 cycles if skip and followed by a 2-word instruction.

Q Cycle Activity:

Q1	Q2	Q3	Q4
Decode	Read register 'f'	Process Data	No operation

If skip:

Q1	Q2	Q3	Q4
No operation	No operation	No operation	No operation

If skip and followed by 2-word instruction:

Q1	Q2	Q3	Q4
No operation	No operation	No operation	No operation
No operation	No operation	No operation	No operation

Example:

```
HERE    TSTFSZ  CNT, 1
NZERO   :
ZERO    :
```

Before Instruction
PC = Address (HERE)
After Instruction
If CNT = 00h,
PC = Address (ZERO)
If CNT ≠ 00h,
PC = Address (NZERO)

XORLW — Exclusive OR literal with W

Syntax:	XORLW k
Operands:	$0 \le k \le 255$
Operation:	(W) .XOR. k → W
Status Affected:	N, Z
Encoding:	0000 | 1010 | kkkk | kkkk
Description:	The contents of W are XORed with the 8-bit literal 'k'. The result is placed in W.
Words:	1
Cycles:	1

Q Cycle Activity:

Q1	Q2	Q3	Q4
Decode	Read literal 'k'	Process Data	Write to W

Example: `XORLW 0AFh`

Before Instruction
W = B5h
After Instruction
W = 1Ah

© 2010-2016 Microchip Technology Inc.

XORWF	**Exclusive OR W with f**
Syntax:	XORWF f {,d {,a}}
Operands:	$0 \le f \le 255$ $d \in [0,1]$ $a \in [0,1]$
Operation:	(W) .XOR. (f) → dest
Status Affected:	N, Z
Encoding:	0001 | 10da | ffff | ffff
Description:	Exclusive OR the contents of W with register 'f'. If 'd' is '0', the result is stored in W. If 'd' is '1', the result is stored back in the register 'f' (default). If 'a' is '0', the Access Bank is selected. If 'a' is '1', the BSR is used to select the GPR bank. If 'a' is '0' and the extended instruction set is enabled, this instruction operates in Indexed Literal Offset Addressing mode whenever $f \le 95$ (5Fh). See **Section 25.2.3 "Byte-Oriented and Bit-Oriented Instructions in Indexed Literal Offset Mode"** for details.
Words:	1
Cycles:	1

Q Cycle Activity:

Q1	Q2	Q3	Q4
Decode	Read register 'f'	Process Data	Write to destination

Example: `XORWF REG, 1, 0`

Before Instruction
REG = AFh
W = B5h
After Instruction
REG = 1Ah
W = B5h

25.2 Extended Instruction Set

In addition to the standard 75 instructions of the PIC18 instruction set, PIC18(L)F2X/4XK22 devices also provide an optional extension to the core CPU functionality. The added features include eight additional instructions that augment indirect and indexed addressing operations and the implementation of Indexed Literal Offset Addressing mode for many of the standard PIC18 instructions.

The additional features of the extended instruction set are disabled by default. To enable them, users must set the XINST Configuration bit.

The instructions in the extended set can all be classified as literal operations, which either manipulate the File Select Registers, or use them for indexed addressing. Two of the instructions, `ADDFSR` and `SUBFSR`, each have an additional special instantiation for using FSR2. These versions (`ADDULNK` and `SUBULNK`) allow for automatic return after execution.

The extended instructions are specifically implemented to optimize re-entrant program code (that is, code that is recursive or that uses a software stack) written in high-level languages, particularly C. Among other things, they allow users working in high-level languages to perform certain operations on data structures more efficiently. These include:

- dynamic allocation and deallocation of software stack space when entering and leaving subroutines
- function pointer invocation
- software Stack Pointer manipulation
- manipulation of variables located in a software stack

A summary of the instructions in the extended instruction set is provided in Table 25-3. Detailed descriptions are provided in **Section 25.2.2 "Extended Instruction Set"**. The opcode field descriptions in Table 25-1 apply to both the standard and extended PIC18 instruction sets.

> **Note:** The instruction set extension and the Indexed Literal Offset Addressing mode were designed for optimizing applications written in C; the user may likely never use these instructions directly in assembler. The syntax for these commands is provided as a reference for users who may be reviewing code that has been generated by a compiler.

25.2.1 EXTENDED INSTRUCTION SYNTAX

Most of the extended instructions use indexed arguments, using one of the File Select Registers and some offset to specify a source or destination register. When an argument for an instruction serves as part of indexed addressing, it is enclosed in square brackets ("[ ]"). This is done to indicate that the argument is used as an index or offset. MPASM™ Assembler will flag an error if it determines that an index or offset value is not bracketed.

When the extended instruction set is enabled, brackets are also used to indicate index arguments in byte-oriented and bit-oriented instructions. This is in addition to other changes in their syntax. For more details, see **Section 25.2.3.1 "Extended Instruction Syntax with Standard PIC18 Commands"**.

> **Note:** In the past, square brackets have been used to denote optional arguments in the PIC18 and earlier instruction sets. In this text and going forward, optional arguments are denoted by braces ("{ }").

TABLE 25-3: EXTENSIONS TO THE PIC18 INSTRUCTION SET

Mnemonic, Operands		Description		Cycles	16-Bit Instruction Word MSb			LSb	Status Affected
ADDFSR	f, k	Add literal to FSR		1	1110	1000	ffkk	kkkk	None
ADDULNK	k	Add literal to FSR2 and return		2	1110	1000	11kk	kkkk	None
CALLW		Call subroutine using WREG		2	0000	0000	0001	0100	None
MOVSF	z_s, f_d	Move z_s (source) to	1st word	2	1110	1011	0zzz	zzzz	None
		f_d (destination)	2nd word		1111	ffff	ffff	ffff	
MOVSS	z_s, z_d	Move z_s (source) to	1st word	2	1110	1011	1zzz	zzzz	None
		z_d (destination)	2nd word		1111	xxxx	xzzz	zzzz	
PUSHL	k	Store literal at FSR2, decrement FSR2		1	1110	1010	kkkk	kkkk	None
SUBFSR	f, k	Subtract literal from FSR		1	1110	1001	ffkk	kkkk	None
SUBULNK	k	Subtract literal from FSR2 and return		2	1110	1001	11kk	kkkk	None

© 2010-2016 Microchip Technology Inc.

25.2.2 EXTENDED INSTRUCTION SET

ADDFSR — Add Literal to FSR

Syntax:	ADDFSR f, k
Operands:	$0 \le k \le 63$ $f \in [0, 1, 2]$
Operation:	FSR(f) + k → FSR(f)
Status Affected:	None
Encoding:	1110 | 1000 | ffkk | kkkk
Description:	The 6-bit literal 'k' is added to the contents of the FSR specified by 'f'.
Words:	1
Cycles:	1

Q Cycle Activity:

Q1	Q2	Q3	Q4
Decode	Read literal 'k'	Process Data	Write to FSR

Example: `ADDFSR 2, 23h`

Before Instruction
FSR2 = 03FFh
After Instruction
FSR2 = 0422h

ADDULNK — Add Literal to FSR2 and Return

Syntax:	ADDULNK k
Operands:	$0 \le k \le 63$
Operation:	FSR2 + k → FSR2, (TOS) → PC
Status Affected:	None
Encoding:	1110 | 1000 | 11kk | kkkk
Description:	The 6-bit literal 'k' is added to the contents of FSR2. A RETURN is then executed by loading the PC with the TOS. The instruction takes two cycles to execute; a NOP is performed during the second cycle. This may be thought of as a special case of the ADDFSR instruction, where f = 3 (binary '11'); it operates only on FSR2.
Words:	1
Cycles:	2

Q Cycle Activity:

Q1	Q2	Q3	Q4
Decode	Read literal 'k'	Process Data	Write to FSR
No Operation	No Operation	No Operation	No Operation

Example: `ADDULNK 23h`

Before Instruction
FSR2 = 03FFh
PC = 0100h
After Instruction
FSR2 = 0422h
PC = (TOS)

Note: All PIC18 instructions may take an optional label argument preceding the instruction mnemonic for use in symbolic addressing. If a label is used, the instruction syntax then becomes: {label} instruction argument(s).

CALLW — Subroutine Call Using WREG

Syntax:	CALLW
Operands:	None
Operation:	(PC + 2) → TOS, (W) → PCL, (PCLATH) → PCH, (PCLATU) → PCU
Status Affected:	None
Encoding:	0000 | 0000 | 0001 | 0100
Description	First, the return address (PC + 2) is pushed onto the return stack. Next, the contents of W are written to PCL; the existing value is discarded. Then, the contents of PCLATH and PCLATU are latched into PCH and PCU, respectively. The second cycle is executed as a NOP instruction while the new next instruction is fetched. Unlike CALL, there is no option to update W, Status or BSR.
Words:	1
Cycles:	2

Q Cycle Activity:

Q1	Q2	Q3	Q4
Decode	Read WREG	PUSH PC to stack	No operation
No operation	No operation	No operation	No operation

Example: `HERE CALLW`

Before Instruction
- PC = address (HERE)
- PCLATH = 10h
- PCLATU = 00h
- W = 06h

After Instruction
- PC = 001006h
- TOS = address (HERE + 2)
- PCLATH = 10h
- PCLATU = 00h
- W = 06h

MOVSF — Move Indexed to f

Syntax:	MOVSF [z_s], f_d
Operands:	$0 \le z_s \le 127$ $0 \le f_d \le 4095$
Operation:	((FSR2) + z_s) → f_d
Status Affected:	None
Encoding: 1st word (source) 2nd word (destin.)	1110 | 1011 | 0zzz | $zzzz_s$ 1111 | ffff | ffff | $ffff_d$
Description:	The contents of the source register are moved to destination register 'f_d'. The actual address of the source register is determined by adding the 7-bit literal offset 'z_s' in the first word to the value of FSR2. The address of the destination register is specified by the 12-bit literal 'f_d' in the second word. Both addresses can be anywhere in the 4096-byte data space (000h to FFFh). The MOVSF instruction cannot use the PCL, TOSU, TOSH or TOSL as the destination register. If the resultant source address points to an indirect addressing register, the value returned will be 00h.
Words:	2
Cycles:	2

Q Cycle Activity:

Q1	Q2	Q3	Q4
Decode	Determine source addr	Determine source addr	Read source reg
Decode	No operation No dummy read	No operation	Write register 'f' (dest)

Example: `MOVSF [05h], REG2`

Before Instruction
- FSR2 = 80h
- Contents of 85h = 33h
- REG2 = 11h

After Instruction
- FSR2 = 80h
- Contents of 85h = 33h
- REG2 = 33h

© 2010-2016 Microchip Technology Inc.

MOVSS — Move Indexed to Indexed

Syntax: MOVSS [z_s], [z_d]

Operands: $0 \le z_s \le 127$
$0 \le z_d \le 127$

Operation: ((FSR2) + z_s) → ((FSR2) + z_d)

Status Affected: None

Encoding:

1st word (source)	1110	1011	1zzz	$zzzz_s$
2nd word (dest.)	1111	xxxx	xzzz	$zzzz_d$

Description: The contents of the source register are moved to the destination register. The addresses of the source and destination registers are determined by adding the 7-bit literal offsets 'z_s' or 'z_d', respectively, to the value of FSR2. Both registers can be located anywhere in the 4096-byte data memory space (000h to FFFh).
The MOVSS instruction cannot use the PCL, TOSU, TOSH or TOSL as the destination register.
If the resultant source address points to an indirect addressing register, the value returned will be 00h. If the resultant destination address points to an indirect addressing register, the instruction will execute as a NOP.

Words: 2

Cycles: 2

Q Cycle Activity:

Q1	Q2	Q3	Q4
Decode	Determine source addr	Determine source addr	Read source reg
Decode	Determine dest addr	Determine dest addr	Write to dest reg

Example: `MOVSS [05h], [06h]`

Before Instruction
FSR2 = 80h
Contents of 85h = 33h
Contents of 86h = 11h

After Instruction
FSR2 = 80h
Contents of 85h = 33h
Contents of 86h = 33h

PUSHL — Store Literal at FSR2, Decrement FSR2

Syntax: PUSHL k

Operands: $0 \le k \le 255$

Operation: k → (FSR2),
FSR2 – 1 → FSR2

Status Affected: None

Encoding:

1111	1010	kkkk	kkkk

Description: The 8-bit literal 'k' is written to the data memory address specified by FSR2. FSR2 is decremented by 1 after the operation. This instruction allows users to push values onto a software stack.

Words: 1

Cycles: 1

Q Cycle Activity:

Q1	Q2	Q3	Q4
Decode	Read 'k'	Process data	Write to destination

Example: `PUSHL 08h`

Before Instruction
FSR2H:FSR2L = 01ECh
Memory (01ECh) = 00h

After Instruction
FSR2H:FSR2L = 01EBh
Memory (01ECh) = 08h

SUBFSR — Subtract Literal from FSR

Syntax:	SUBFSR f, k
Operands:	$0 \le k \le 63$ $f \in [0, 1, 2]$
Operation:	FSR(f) – k → FSRf
Status Affected:	None
Encoding:	`1110` `1001` `ffkk` `kkkk`
Description:	The 6-bit literal ‘k’ is subtracted from the contents of the FSR specified by ‘f’.
Words:	1
Cycles:	1

Q Cycle Activity:

Q1	Q2	Q3	Q4
Decode	Read register ‘f’	Process Data	Write to destination

Example: `SUBFSR 2, 23h`

Before Instruction
FSR2 = 03FFh
After Instruction
FSR2 = 03DCh

SUBULNK — Subtract Literal from FSR2 and Return

Syntax:	SUBULNK k
Operands:	$0 \le k \le 63$
Operation:	FSR2 – k → FSR2 (TOS) → PC
Status Affected:	None
Encoding:	`1110` `1001` `11kk` `kkkk`
Description:	The 6-bit literal ‘k’ is subtracted from the contents of the FSR2. A `RETURN` is then executed by loading the PC with the TOS. The instruction takes two cycles to execute; a `NOP` is performed during the second cycle. This may be thought of as a special case of the `SUBFSR` instruction, where f = 3 (binary ‘`11`’); it operates only on FSR2.
Words:	1
Cycles:	2

Q Cycle Activity:

Q1	Q2	Q3	Q4
Decode	Read register ‘f’	Process Data	Write to destination
No Operation	No Operation	No Operation	No Operation

Example: `SUBULNK 23h`

Before Instruction
FSR2 = 03FFh
PC = 0100h
After Instruction
FSR2 = 03DCh
PC = (TOS)

© 2010-2016 Microchip Technology Inc.

25.2.3 BYTE-ORIENTED AND BIT-ORIENTED INSTRUCTIONS IN INDEXED LITERAL OFFSET MODE

Note:	Enabling the PIC18 instruction set extension may cause legacy applications to behave erratically or fail entirely.

In addition to eight new commands in the extended set, enabling the extended instruction set also enables Indexed Literal Offset Addressing mode (**Section 5.7.1 "Indexed Addressing with Literal Offset"**). This has a significant impact on the way that many commands of the standard PIC18 instruction set are interpreted.

When the extended set is disabled, addresses embedded in opcodes are treated as literal memory locations: either as a location in the Access Bank ('a' = 0), or in a GPR bank designated by the BSR ('a' = 1). When the extended instruction set is enabled and 'a' = 0, however, a file register argument of 5Fh or less is interpreted as an offset from the pointer value in FSR2 and not as a literal address. For practical purposes, this means that all instructions that use the Access RAM bit as an argument – that is, all byte-oriented and bit-oriented instructions, or almost half of the core PIC18 instructions – may behave differently when the extended instruction set is enabled.

When the content of FSR2 is 00h, the boundaries of the Access RAM are essentially remapped to their original values. This may be useful in creating backward compatible code. If this technique is used, it may be necessary to save the value of FSR2 and restore it when moving back and forth between C and assembly routines in order to preserve the Stack Pointer. Users must also keep in mind the syntax requirements of the extended instruction set (see **Section 25.2.3.1 "Extended Instruction Syntax with Standard PIC18 Commands"**).

Although the Indexed Literal Offset Addressing mode can be very useful for dynamic stack and pointer manipulation, it can also be very annoying if a simple arithmetic operation is carried out on the wrong register. Users who are accustomed to the PIC18 programming must keep in mind that, when the extended instruction set is enabled, register addresses of 5Fh or less are used for Indexed Literal Offset Addressing.

Representative examples of typical byte-oriented and bit-oriented instructions in the Indexed Literal Offset Addressing mode are provided on the following page to show how execution is affected. The operand conditions shown in the examples are applicable to all instructions of these types.

25.2.3.1 Extended Instruction Syntax with Standard PIC18 Commands

When the extended instruction set is enabled, the file register argument, 'f', in the standard byte-oriented and bit-oriented commands is replaced with the literal offset value, 'k'. As already noted, this occurs only when 'f' is less than or equal to 5Fh. When an offset value is used, it must be indicated by square brackets ("[ ]"). As with the extended instructions, the use of brackets indicates to the compiler that the value is to be interpreted as an index or an offset. Omitting the brackets, or using a value greater than 5Fh within brackets, will generate an error in the MPASM assembler.

If the index argument is properly bracketed for Indexed Literal Offset Addressing, the Access RAM argument is never specified; it will automatically be assumed to be '0'. This is in contrast to standard operation (extended instruction set disabled) when 'a' is set on the basis of the target address. Declaring the Access RAM bit in this mode will also generate an error in the MPASM assembler.

The destination argument, 'd', functions as before.

In the latest versions of the MPASM™ assembler, language support for the extended instruction set must be explicitly invoked. This is done with either the command line option, /y, or the PE directive in the source listing.

25.2.4 CONSIDERATIONS WHEN ENABLING THE EXTENDED INSTRUCTION SET

It is important to note that the extensions to the instruction set may not be beneficial to all users. In particular, users who are not writing code that uses a software stack may not benefit from using the extensions to the instruction set.

Additionally, the Indexed Literal Offset Addressing mode may create issues with legacy applications written to the PIC18 assembler. This is because instructions in the legacy code may attempt to address registers in the Access Bank below 5Fh. Since these addresses are interpreted as literal offsets to FSR2 when the instruction set extension is enabled, the application may read or write to the wrong data addresses.

When porting an application to the PIC18(L)F2X/4XK22, it is very important to consider the type of code. A large, re-entrant application that is written in 'C' and would benefit from efficient compilation will do well when using the instruction set extensions. Legacy applications that heavily use the Access Bank will most likely not benefit from using the extended instruction set.

ADDWF — ADD W to Indexed (Indexed Literal Offset mode)

Syntax:	ADDWF [k] {,d}
Operands:	$0 \le k \le 95$ $d \in [0,1]$
Operation:	(W) + ((FSR2) + k) → dest
Status Affected:	N, OV, C, DC, Z
Encoding:	0010 | 01d0 | kkkk | kkkk
Description:	The contents of W are added to the contents of the register indicated by FSR2, offset by the value 'k'. If 'd' is '0', the result is stored in W. If 'd' is '1', the result is stored back in register 'f' (default).
Words:	1
Cycles:	1

Q Cycle Activity:

Q1	Q2	Q3	Q4
Decode	Read 'k'	Process Data	Write to destination

Example: `ADDWF [OFST], 0`

Before Instruction
- W = 17h
- OFST = 2Ch
- FSR2 = 0A00h
- Contents of 0A2Ch = 20h

After Instruction
- W = 37h
- Contents of 0A2Ch = 20h

BSF — Bit Set Indexed (Indexed Literal Offset mode)

Syntax:	BSF [k], b
Operands:	$0 \le f \le 95$ $0 \le b \le 7$
Operation:	1 → ((FSR2) + k)<b>
Status Affected:	None
Encoding:	1000 | bbb0 | kkkk | kkkk
Description:	Bit 'b' of the register indicated by FSR2, offset by the value 'k', is set.
Words:	1
Cycles:	1

Q Cycle Activity:

Q1	Q2	Q3	Q4
Decode	Read register 'f'	Process Data	Write to destination

Example: `BSF [FLAG_OFST], 7`

Before Instruction
- FLAG_OFST = 0Ah
- FSR2 = 0A00h
- Contents of 0A0Ah = 55h

After Instruction
- Contents of 0A0Ah = D5h

SETF — Set Indexed (Indexed Literal Offset mode)

Syntax:	SETF [k]
Operands:	$0 \le k \le 95$
Operation:	FFh → ((FSR2) + k)
Status Affected:	None
Encoding:	0110 | 1000 | kkkk | kkkk
Description:	The contents of the register indicated by FSR2, offset by 'k', are set to FFh.
Words:	1
Cycles:	1

Q Cycle Activity:

Q1	Q2	Q3	Q4
Decode	Read 'k'	Process Data	Write register

Example: `SETF [OFST]`

Before Instruction
- OFST = 2Ch
- FSR2 = 0A00h
- Contents of 0A2Ch = 00h

After Instruction
- Contents of 0A2Ch = FFh

© 2010-2016 Microchip Technology Inc.

25.2.5 SPECIAL CONSIDERATIONS WITH MICROCHIP MPLAB® IDE TOOLS

The latest versions of Microchip's software tools have been designed to fully support the extended instruction set of the PIC18(L)F2X/4XK22 family of devices. This includes the MPLAB C18 C compiler, MPASM assembly language and MPLAB Integrated Development Environment (IDE).

When selecting a target device for software development, MPLAB IDE will automatically set default Configuration bits for that device. The default setting for the XINST Configuration bit is '0', disabling the extended instruction set and Indexed Literal Offset Addressing mode. For proper execution of applications developed to take advantage of the extended instruction set, XINST must be set during programming.

To develop software for the extended instruction set, the user must enable support for the instructions and the Indexed Addressing mode in their language tool(s). Depending on the environment being used, this may be done in several ways:

- A menu option, or dialog box within the environment, that allows the user to configure the language tool and its settings for the project
- A command line option
- A directive in the source code

These options vary between different compilers, assemblers and development environments. Users are encouraged to review the documentation accompanying their development systems for the appropriate information.

26.0 DEVELOPMENT SUPPORT

The PIC® microcontrollers (MCU) and dsPIC® digital signal controllers (DSC) are supported with a full range of software and hardware development tools:

- Integrated Development Environment
  - MPLAB® X IDE Software
- Compilers/Assemblers/Linkers
  - MPLAB XC Compiler
  - MPASM™ Assembler
  - MPLINK™ Object Linker/ MPLIB™ Object Librarian
  - MPLAB Assembler/Linker/Librarian for Various Device Families
- Simulators
  - MPLAB X SIM Software Simulator
- Emulators
  - MPLAB REAL ICE™ In-Circuit Emulator
- In-Circuit Debuggers/Programmers
  - MPLAB ICD 3
  - PICkit™ 3
- Device Programmers
  - MPLAB PM3 Device Programmer
- Low-Cost Demonstration/Development Boards, Evaluation Kits and Starter Kits
- Third-party development tools

26.1 MPLAB X Integrated Development Environment Software

The MPLAB X IDE is a single, unified graphical user interface for Microchip and third-party software, and hardware development tool that runs on Windows®, Linux and Mac OS® X. Based on the NetBeans IDE, MPLAB X IDE is an entirely new IDE with a host of free software components and plug-ins for high-performance application development and debugging. Moving between tools and upgrading from software simulators to hardware debugging and programming tools is simple with the seamless user interface.

With complete project management, visual call graphs, a configurable watch window and a feature-rich editor that includes code completion and context menus, MPLAB X IDE is flexible and friendly enough for new users. With the ability to support multiple tools on multiple projects with simultaneous debugging, MPLAB X IDE is also suitable for the needs of experienced users.

Feature-Rich Editor:

- Color syntax highlighting
- Smart code completion makes suggestions and provides hints as you type
- Automatic code formatting based on user-defined rules
- Live parsing

User-Friendly, Customizable Interface:

- Fully customizable interface: toolbars, toolbar buttons, windows, window placement, etc.
- Call graph window

Project-Based Workspaces:

- Multiple projects
- Multiple tools
- Multiple configurations
- Simultaneous debugging sessions

File History and Bug Tracking:

- Local file history feature
- Built-in support for Bugzilla issue tracker

© 2010-2016 Microchip Technology Inc.

26.2 MPLAB XC Compilers

The MPLAB XC Compilers are complete ANSI C compilers for all of Microchip's 8, 16, and 32-bit MCU and DSC devices. These compilers provide powerful integration capabilities, superior code optimization and ease of use. MPLAB XC Compilers run on Windows, Linux or MAC OS X.

For easy source level debugging, the compilers provide debug information that is optimized to the MPLAB X IDE.

The free MPLAB XC Compiler editions support all devices and commands, with no time or memory restrictions, and offer sufficient code optimization for most applications.

MPLAB XC Compilers include an assembler, linker and utilities. The assembler generates relocatable object files that can then be archived or linked with other relocatable object files and archives to create an executable file. MPLAB XC Compiler uses the assembler to produce its object file. Notable features of the assembler include:

- Support for the entire device instruction set
- Support for fixed-point and floating-point data
- Command-line interface
- Rich directive set
- Flexible macro language
- MPLAB X IDE compatibility

26.3 MPASM Assembler

The MPASM Assembler is a full-featured, universal macro assembler for PIC10/12/16/18 MCUs.

The MPASM Assembler generates relocatable object files for the MPLINK Object Linker, Intel® standard HEX files, MAP files to detail memory usage and symbol reference, absolute LST files that contain source lines and generated machine code, and COFF files for debugging.

The MPASM Assembler features include:

- Integration into MPLAB X IDE projects
- User-defined macros to streamline assembly code
- Conditional assembly for multipurpose source files
- Directives that allow complete control over the assembly process

26.4 MPLINK Object Linker/ MPLIB Object Librarian

The MPLINK Object Linker combines relocatable objects created by the MPASM Assembler. It can link relocatable objects from precompiled libraries, using directives from a linker script.

The MPLIB Object Librarian manages the creation and modification of library files of precompiled code. When a routine from a library is called from a source file, only the modules that contain that routine will be linked in with the application. This allows large libraries to be used efficiently in many different applications.

The object linker/library features include:

- Efficient linking of single libraries instead of many smaller files
- Enhanced code maintainability by grouping related modules together
- Flexible creation of libraries with easy module listing, replacement, deletion and extraction

26.5 MPLAB Assembler, Linker and Librarian for Various Device Families

MPLAB Assembler produces relocatable machine code from symbolic assembly language for PIC24, PIC32 and dsPIC DSC devices. MPLAB XC Compiler uses the assembler to produce its object file. The assembler generates relocatable object files that can then be archived or linked with other relocatable object files and archives to create an executable file. Notable features of the assembler include:

- Support for the entire device instruction set
- Support for fixed-point and floating-point data
- Command-line interface
- Rich directive set
- Flexible macro language
- MPLAB X IDE compatibility

26.6 MPLAB X SIM Software Simulator

The MPLAB X SIM Software Simulator allows code development in a PC-hosted environment by simulating the PIC MCUs and dsPIC DSCs on an instruction level. On any given instruction, the data areas can be examined or modified and stimuli can be applied from a comprehensive stimulus controller. Registers can be logged to files for further run-time analysis. The trace buffer and logic analyzer display extend the power of the simulator to record and track program execution, actions on I/O, most peripherals and internal registers.

The MPLAB X SIM Software Simulator fully supports symbolic debugging using the MPLAB XC Compilers, and the MPASM and MPLAB Assemblers. The software simulator offers the flexibility to develop and debug code outside of the hardware laboratory environment, making it an excellent, economical software development tool.

26.7 MPLAB REAL ICE In-Circuit Emulator System

The MPLAB REAL ICE In-Circuit Emulator System is Microchip's next generation high-speed emulator for Microchip Flash DSC and MCU devices. It debugs and programs all 8, 16 and 32-bit MCU, and DSC devices with the easy-to-use, powerful graphical user interface of the MPLAB X IDE.

The emulator is connected to the design engineer's PC using a high-speed USB 2.0 interface and is connected to the target with either a connector compatible with in-circuit debugger systems (RJ-11) or with the new high-speed, noise tolerant, Low-Voltage Differential Signal (LVDS) interconnection (CAT5).

The emulator is field upgradable through future firmware downloads in MPLAB X IDE. MPLAB REAL ICE offers significant advantages over competitive emulators including full-speed emulation, run-time variable watches, trace analysis, complex breakpoints, logic probes, a ruggedized probe interface and long (up to three meters) interconnection cables.

26.8 MPLAB ICD 3 In-Circuit Debugger System

The MPLAB ICD 3 In-Circuit Debugger System is Microchip's most cost-effective, high-speed hardware debugger/programmer for Microchip Flash DSC and MCU devices. It debugs and programs PIC Flash microcontrollers and dsPIC DSCs with the powerful, yet easy-to-use graphical user interface of the MPLAB IDE.

The MPLAB ICD 3 In-Circuit Debugger probe is connected to the design engineer's PC using a high-speed USB 2.0 interface and is connected to the target with a connector compatible with the MPLAB ICD 2 or MPLAB REAL ICE systems (RJ-11). MPLAB ICD 3 supports all MPLAB ICD 2 headers.

26.9 PICkit 3 In-Circuit Debugger/ Programmer

The MPLAB PICkit 3 allows debugging and programming of PIC and dsPIC Flash microcontrollers at a most affordable price point using the powerful graphical user interface of the MPLAB IDE. The MPLAB PICkit 3 is connected to the design engineer's PC using a full-speed USB interface and can be connected to the target via a Microchip debug (RJ-11) connector (compatible with MPLAB ICD 3 and MPLAB REAL ICE). The connector uses two device I/O pins and the Reset line to implement in-circuit debugging and In-Circuit Serial Programming™ (ICSP™).

26.10 MPLAB PM3 Device Programmer

The MPLAB PM3 Device Programmer is a universal, CE compliant device programmer with programmable voltage verification at V_{DDMIN} and V_{DDMAX} for maximum reliability. It features a large LCD display (128 x 64) for menus and error messages, and a modular, detachable socket assembly to support various package types. The ICSP cable assembly is included as a standard item. In Stand-Alone mode, the MPLAB PM3 Device Programmer can read, verify and program PIC devices without a PC connection. It can also set code protection in this mode. The MPLAB PM3 connects to the host PC via an RS-232 or USB cable. The MPLAB PM3 has high-speed communications and optimized algorithms for quick programming of large memory devices, and incorporates an MMC card for file storage and data applications.

© 2010-2016 Microchip Technology Inc.

26.11 Demonstration/Development Boards, Evaluation Kits, and Starter Kits

A wide variety of demonstration, development and evaluation boards for various PIC MCUs and dsPIC DSCs allows quick application development on fully functional systems. Most boards include prototyping areas for adding custom circuitry and provide application firmware and source code for examination and modification.

The boards support a variety of features, including LEDs, temperature sensors, switches, speakers, RS-232 interfaces, LCD displays, potentiometers and additional EEPROM memory.

The demonstration and development boards can be used in teaching environments, for prototyping custom circuits and for learning about various microcontroller applications.

In addition to the PICDEM™ and dsPICDEM™ demonstration/development board series of circuits, Microchip has a line of evaluation kits and demonstration software for analog filter design, KEELOQ® security ICs, CAN, IrDA®, PowerSmart battery management, SEEVAL® evaluation system, Sigma-Delta ADC, flow rate sensing, plus many more.

Also available are starter kits that contain everything needed to experience the specified device. This usually includes a single application and debug capability, all on one board.

Check the Microchip web page (www.microchip.com) for the complete list of demonstration, development and evaluation kits.

26.12 Third-Party Development Tools

Microchip also offers a great collection of tools from third-party vendors. These tools are carefully selected to offer good value and unique functionality.

- Device Programmers and Gang Programmers from companies, such as SoftLog and CCS
- Software Tools from companies, such as Gimpel and Trace Systems
- Protocol Analyzers from companies, such as Saleae and Total Phase
- Demonstration Boards from companies, such as MikroElektronika, Digilent® and Olimex
- Embedded Ethernet Solutions from companies, such as EZ Web Lynx, WIZnet and IPLogika®

27.0 ELECTRICAL SPECIFICATIONS

Absolute Maximum Ratings (†)

Ambient temperature under bias ..... -40°C to +125°C

Storage temperature ..... -65°C to +150°C

Voltage on any pin with respect to V_{SS} (except V_{DD}, and $\overline{MCLR}$) ..... -0.3V to (V_{DD} + 0.3V)

Voltage on V_{DD} with respect to V_{SS}

PIC18LF24K22 ..... -0.3V to +4.5V

PIC18(L)F26K22 ..... -0.3V to +6.5V

Voltage on $\overline{MCLR}$ with respect to V_{SS} **(Note 2)** ..... 0V to +11.0V

Total power dissipation **(Note 1)** 1.0W

Maximum current out of V_{SS} pin (-40°C to +85°C) ..... 300 mA

Maximum current out of V_{SS} pin (+85°C to +125°C) ..... 125 mA

Maximum current into V_{DD} pin (-40°C to +85°C) ..... 200 mA

Maximum current into V_{DD} pin (+85°C to +125°C) ..... 85 mA

Input clamp current, I_{IK} (V_I < 0 or V_I > V_{DD}) ..... ±20 mA

Output clamp current, I_{OK} (V_O < 0 or V_O > V_{DD}) ..... ±20 mA

Maximum output current sunk by any I/O pin ..... 25 mA

Maximum output current sourced by any I/O pin ..... 25 mA

Maximum current sunk by all ports (-40°C to +85°C) ..... 200 mA

Maximum current sunk by all ports (+85°C to +125°C) ..... 110 mA

Maximum current sourced by all ports (-40°C to +85°C) ..... 185 mA

Maximum current sourced by all ports (+85°C to +125°C) ..... 70 mA

Note 1: Power dissipation is calculated as follows:
$P_{dis} = V_{DD} \times \{I_{DD} - \sum I_{OH}\} + \sum \{(V_{DD} - V_{OH}) \times I_{OH}\} + \sum(V_{OL} \times I_{OL})$

2: Voltage spikes below V_{SS} at the $\overline{MCLR}$/V_{PP}/RE3 pin, inducing currents greater than 80 mA, may cause latch-up. Thus, a series resistor of 50-100Ω should be used when applying a “low” level to the $\overline{MCLR}$/V_{PP}/RE3 pin, rather than pulling this pin directly to V_{SS}.

† **NOTICE:** Stresses above those listed under “Absolute Maximum Ratings” may cause permanent damage to the device. This is a stress rating only and functional operation of the device at those or any other conditions above those indicated in the operation listings of this specification is not implied. Exposure to maximum rating conditions for extended periods may affect device reliability.

© 2010-2016 Microchip Technology Inc.

FIGURE 27-1: PIC18LF2X/4XK22 FAMILY VOLTAGE-FREQUENCY GRAPH (INDUSTRIAL TEMPERATURE)

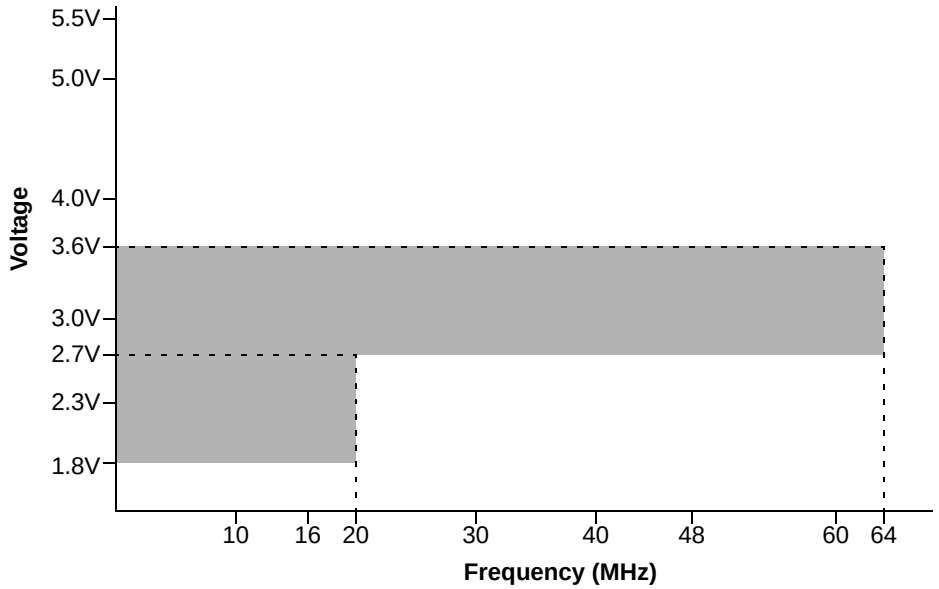

Note 1: Maximum Frequency 20 MHz, 1.8V to 2.7V, -40°C to +85°C

2: Maximum Frequency 64 MHz, 2.7V to 3.6V, -40°C to +85°C

FIGURE 27-2: PIC18LF2X/4XK22 FAMILY VOLTAGE-FREQUENCY GRAPH (EXTENDED TEMPERATURE)

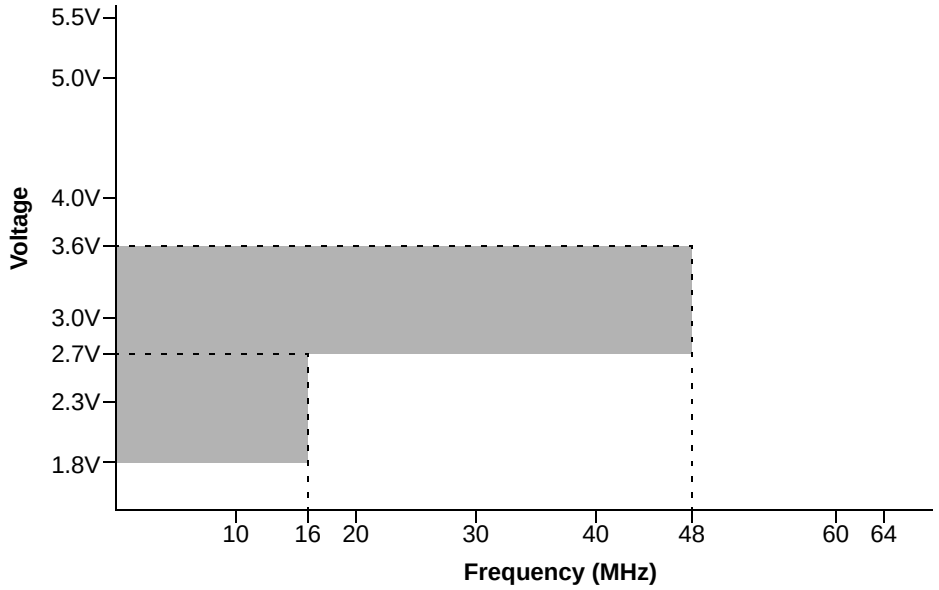

Note 1: Maximum Frequency 16 MHz, 1.8V to 2.7V, +85°C to +125°C

2: Maximum Frequency 48 MHz, 2.7V to 3.6V, +85°C to +125°C

FIGURE 27-3: PIC18F2X/4XK22 FAMILY VOLTAGE-FREQUENCY GRAPH (INDUSTRIAL TEMPERATURE)

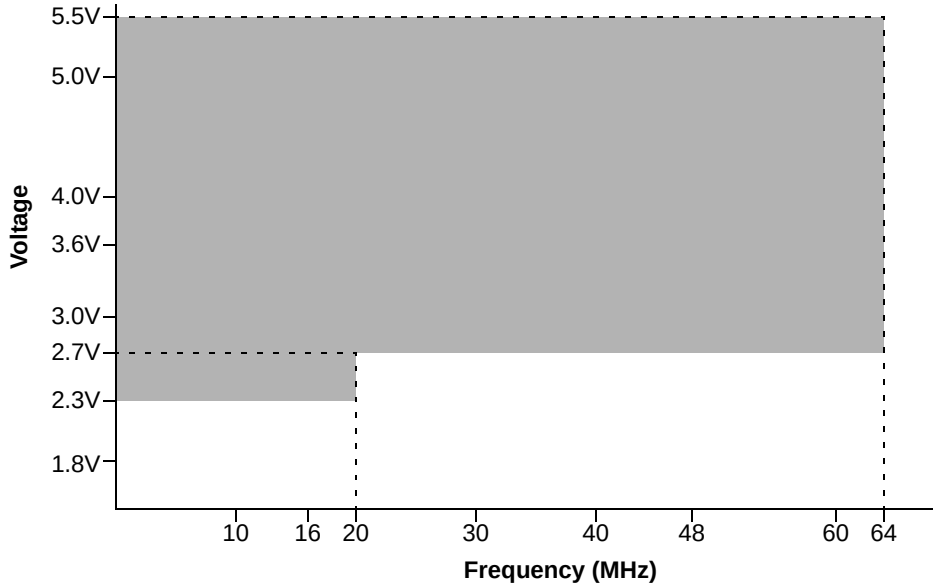

Note 1: Maximum Frequency 20 MHz, 2.3V to 2.7V, -40°C to +85°C

2: Maximum Frequency 64 MHz, 2.7V to 5.5V, -40°C to +85°C

FIGURE 27-4: PIC18F2X/4XK22 FAMILY VOLTAGE-FREQUENCY GRAPH (EXTENDED TEMPERATURE)

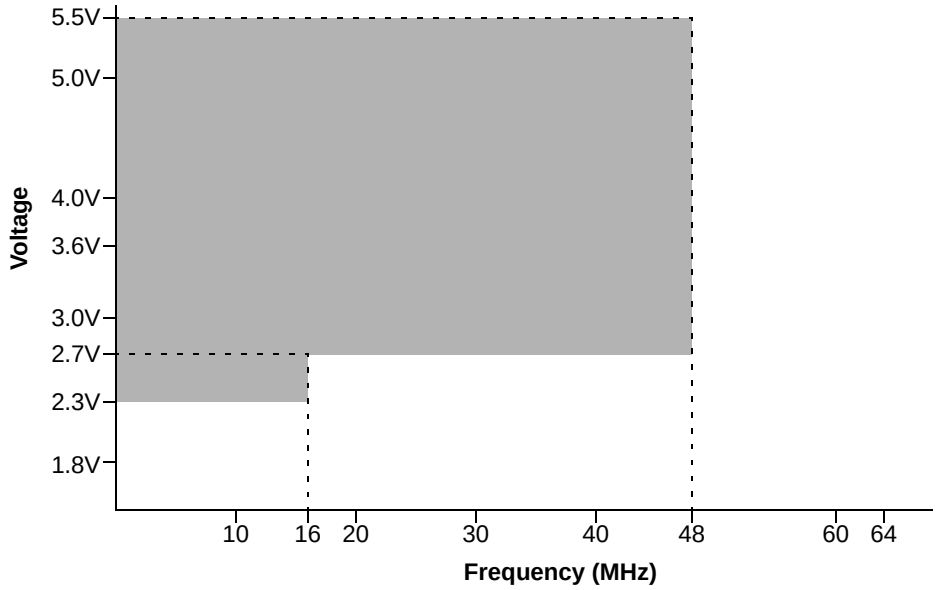

Note 1: Maximum Frequency 16 MHz, 2.3V to 2.7V, +85°C to +125°C

2: Maximum Frequency 48 MHz, 2.7V to 5.5V, +85°C to +125°C

© 2010-2016 Microchip Technology Inc.

27.1 DC Characteristics: Supply Voltage, PIC18(L)F2X/4XK22

PIC18(L)F2X/4XK22				Standard Operating Conditions (unless otherwise stated) Operating temperature -40°C ≤ TA ≤ +125°C				
Param No.	**Symbol**	**Characteristic**		**Min**	**Typ**	**Max**	**Units**	**Conditions**
D001	VDD	**Supply Voltage**	PIC18LF2X/4XK22	1.8	—	3.6	V	
			PIC18F2X/4XK22	2.3	—	5.5	V	
D002	VDR	**RAM Data Retention Voltage(1)**		1.5	—	—	V	
D003	VPOR	**VDD Start Voltage** to ensure internal Power-on Reset signal		—	—	0.7	V	See section on Power-on Reset for details
D004	SVDD	**VDD Rise Rate** to ensure internal Power-on Reset signal		0.05	—	—	V/ms	See section on Power-on Reset for details
D005	VBOR	**Brown-out Reset Voltage**						
		BORV<1:0> = 11(2)		1.75	1.9	2.05	V	
		BORV<1:0> = 10		2.05	2.2	2.35	V	
		BORV<1:0> = 01		2.35	2.5	2.65	V	
		BORV<1:0> = 00(3)		2.65	2.85	3.05	V	

Note 1: This is the limit to which VDD can be lowered in Sleep mode, or during a device Reset, without losing RAM data.

2: On PIC18(L)F2X/4XK22 devices with BOR enabled, operation is supported until a BOR occurs. This is valid although VDD may be below the minimum rated supply voltage.

3: With BOR enabled, full-speed operation (FOSC = 64 MHz or 48 MHz) is supported until a BOR occurs. This is valid although VDD may be below the minimum voltage for this frequency.

27.2 DC Characteristics: Power-Down Current, PIC18(L)F2X/4XK22

PIC18LF2X/4XK22		Standard Operating Conditions (unless otherwise stated) Operating temperature -40°C ≤ TA ≤ +125°C						
PIC18F2X/4XK22		**Standard Operating Conditions (unless otherwise stated)** Operating temperature -40°C ≤ TA ≤ +125°C						
Param No.	**Device Characteristics**	**Typ +25°C**	**Typ +60°C**	**Max +85°C**	**Max +125°C**	**Units**	**Conditions**	
							VDD	**Notes**
Power-down Base Current (IPD)(1)								
D006	Sleep mode	0.01	0.04	2	10	μA	1.8V	WDT, BOR, FVR and SOSC disabled, all Peripherals inactive
		0.01	0.06	2	10	μA	3.0V	
		12	13	25	35	μA	2.3V	
		13	14	30	40	μA	3.0V	
		13	14	35	50	μA	5.0V	
Power-down Module Differential Current (delta IPD)								
D007	Watchdog Timer	0.3	0.3	2.5	2.5	μA	1.8V	
		0.5	0.5	2.5	2.5	μA	3.0V	
		0.35	0.35	5.0	5.0	μA	2.3V	
		0.5	0.5	5.0	5.0	μA	3.0V	
		0.5	0.5	5.0	5.0	μA	5.0V	
D008	Brown-out Reset(2)	8	8.5	15	16	μA	2.0V	
		9	9.5	15	16	μA	3.0V	
		3.4	3.4	15	16	μA	2.3V	
		3.8	3.8	15	16	μA	3.0V	
		5.2	5.2	15	16	μA	5.0V	
D010	High/Low Voltage Detect(2)	6.5	6.7	15	15	μA	2.0V	
		7	7.5	15	15	μA	3.0V	
		2.1	2.1	15	15	μA	2.3V	
		2.4	2.4	15	15	μA	3.0V	
		3.2	3.2	15	15	μA	5.0V	
D011	Secondary Oscillator	0.5	1	3	10	μA	1.8V	32 kHz on SOSC
		0.6	1.1	4	10	μA	3.0V	
		0.5	1	3	10	μA	2.3V	
		0.6	1.1	4	10	μA	3.0V	
		0.6	1.1	5	10	μA	5.0V	

Note 1: The power-down current in Sleep mode does not depend on the oscillator type. Power-down current is measured with the part in Sleep mode, with all I/O pins in high-impedance state and tied to VDD or VSS and all features that add delta current disabled (such as WDT, Timer1 Oscillator, BOR, etc.).

2: On PIC18LF2X/4XK22 the BOR, HLVD and FVR enable internal band gap reference. With more than one of these modules enabled, the current consumption will be less than the sum of the specifications. On PIC18F2X/4XK22, the internal band gap reference is always enabled and its current consumption is included in the Power-down Base Current (IPD).

3: A/D converter differential currents apply only in Run mode. In Sleep or Idle mode both the ADC and the FRC turn off as soon as conversion (if any) is complete.

© 2010-2016 Microchip Technology Inc.

27.2 DC Characteristics: Power-Down Current, PIC18(L)F2X/4XK22 (Continued)

PIC18LF2X/4XK22		Standard Operating Conditions (unless otherwise stated) Operating temperature -40°C ≤ TA ≤ +125°C						
PIC18F2X/4XK22		**Standard Operating Conditions (unless otherwise stated)** Operating temperature -40°C ≤ TA ≤ +125°C						
Param No.	**Device Characteristics**	**Typ +25°C**	**Typ +60°C**	**Max +85°C**	**Max +125°C**	**Units**	**Conditions**	
							VDD	**Notes**
D015	Comparators	7	7	18	18	μA	1.8V	LP mode
		7	7	18	18	μA	3.0V	
		7	7	18	18	μA	2.3V	
		7	7	18	18	μA	3.0V	
		8	8	20	20	μA	5.0V	
D016	Comparators	38	38	95	95	μA	1.8V	HP mode
		40	40	105	105	μA	3.0V	
		39	39	95	95	μA	2.3V	
		40	40	105	105	μA	3.0V	
		40	40	105	105	μA	5.0V	
D017	DAC	14	14	25	25	μA	2.0V	
		20	20	35	35	μA	3.0V	
		15	15	30	30	μA	2.3V	
		20	20	35	35	μA	3.0V	
		32	32	60	60	μA	5.0V	
D018	FVR(2)	15	16	25	25	μA	1.8V	
		15	16	25	25	μA	3.0V	
		28	28	45	45	μA	2.3V	
		31	31	55	55	μA	3.0V	
		66	66	100	100	μA	5.0V	
D013	A/D Converter(3)	185	185	370	370	μA	1.8V	A/D on, not converting
		210	210	400	400	μA	3.0V	
		200	200	380	380	μA	2.3V	
		210	210	400	400	μA	3.0V	
		250	250	450	450	μA	5.0V	

Note 1: The power-down current in Sleep mode does not depend on the oscillator type. Power-down current is measured with the part in Sleep mode, with all I/O pins in high-impedance state and tied to VDD or VSS and all features that add delta current disabled (such as WDT, Timer1 Oscillator, BOR, etc.).

2: On PIC18LF2X/4XK22 the BOR, HLVD and FVR enable internal band gap reference. With more than one of these modules enabled, the current consumption will be less than the sum of the specifications. On PIC18F2X/4XK22, the internal band gap reference is always enabled and its current consumption is included in the Power-down Base Current (IPD).

3: A/D converter differential currents apply only in Run mode. In Sleep or Idle mode both the ADC and the FRC turn off as soon as conversion (if any) is complete.

27.3 DC Characteristics: RC Run Supply Current, PIC18(L)F2X/4XK22

PIC18LF2X/4XK22		Standard Operating Conditions (unless otherwise stated) Operating temperature -40°C ≤ TA ≤ +125°C					
PIC18F2X/4XK22		**Standard Operating Conditions (unless otherwise stated)** Operating temperature -40°C ≤ TA ≤ +125°C					
Param No.	**Device Characteristics**	**Typ**	**Max**	**Units**	**Conditions**		
D020	Supply Current (IDD)(1),(2)	3.6	23	μA	-40°C	VDD = 1.8V	FOSC = 31 kHz (**RC_RUN** mode, LFINTOSC source)
		3.9	25	μA	+25°C		
		3.9	—	μA	+60°C		
		3.9	28	μA	+85°C		
		4.0	30	μA	125°C		
D021		8.1	26	μA	-40°C	VDD = 3.0V	
		8.4	30	μA	+25°C		
		8.6	—	μA	+60°C		
		8.7	35	μA	+85°C		
		10.7	40	μA	+125°C		
D022		16	35	μA	-40°C	VDD = 2.3V	FOSC = 31 kHz (**RC_RUN** mode, LFINTOSC source)
		17	35	μA	+25°C		
		18	35	μA	+85°C		
		19	50	μA	+125°C		
D023		18	50	μA	-40°C	VDD = 3.0V	
		20	50	μA	+25°C		
		21	50	μA	+85°C		
		22	60	μA	+125°C		
D024		19	55	μA	-40°C	VDD = 5.0V	
		21	55	μA	+25°C		
		22	55	μA	+85°C		
		23	70	μA	+125°C		
D025		0.14	0.25	mA	-40°C to +125°C	VDD = 1.8V	FOSC = 500 kHz (**RC_RUN** mode, MFINTOSC source)
D026		0.17	0.30	mA	-40°C to +125°C	VDD = 3.0V	
D027		0.18	0.25	mA	-40°C to +125°C	VDD = 2.3V	FOSC = 500 kHz (**RC_RUN** mode, MFINTOSC source)
D028		0.20	0.30	mA	-40°C to +125°C	VDD = 3.0V	
D029		0.25	0.35	mA	-40°C to +125°C	VDD = 5.0V	

Note 1: The supply current is mainly a function of operating voltage, frequency and mode. Other factors, such as I/O pin loading and switching rate, oscillator type and circuit, internal code execution pattern and temperature, also have an impact on the current consumption.
Test condition: All Peripheral Module Control bits in PMD0, PMD1 and PMD2 set to '1'.

2: The test conditions for all IDD measurements in active operation mode are:
All I/O pins set as outputs driven to Vss;
$\overline{\text{MCLR}}$ = VDD;
OSC1 = external square wave, from rail-to-rail (PRI_RUN and PRI_IDLE only).

© 2010-2016 Microchip Technology Inc.

27.3 DC Characteristics: RC Run Supply Current, PIC18(L)F2X/4XK22 (Continued)

PIC18LF2X/4XK22		Standard Operating Conditions (unless otherwise stated) Operating temperature -40°C ≤ TA ≤ +125°C					
PIC18F2X/4XK22		**Standard Operating Conditions (unless otherwise stated)** Operating temperature -40°C ≤ TA ≤ +125°C					
Param No.	**Device Characteristics**	**Typ**	**Max**	**Units**	**Conditions**		
D030		0.35	0.50	mA	-40°C to +125°C	VDD = 1.8V	FOSC = 1 MHz (**RC_RUN** mode, HFINTOSC source)
D031		0.45	0.65	mA	-40°C to +125°C	VDD = 3.0V	
D032		0.40	0.60	mA	-40°C to +125°C	VDD = 2.3V	FOSC = 1 MHz (**RC_RUN** mode, HFINTOSC source)
D033		0.50	0.65	mA	-40°C to +125°C	VDD = 3.0V	
D034		0.55	0.75	mA	-40°C to +125°C	VDD = 5.0V	
D035		1.3	2.0	mA	-40°C to +125°C	VDD = 1.8V	FOSC = 16 MHz (**RC_RUN** mode, HFINTOSC source)
D036		2.2	3.0	mA	-40°C to +125°C	VDD = 3.0V	
D037		1.7	2.0	mA	-40°C to +125°C	VDD = 2.3V	FOSC = 16 MHz (**RC_RUN** mode, HFINTOSC source)
D038		2.2	3.0	mA	-40°C to +125°C	VDD = 3.0V	
D039		2.5	3.5	mA	-40°C to +125°C	VDD = 5.0V	
D041		6.2	8.5	mA	-40°C to +125°C	VDD = 3.0V	FOSC = 64 MHz (**RC_RUN** mode, HFINTOSC + PLL source)
D043		6.2	8.5	mA	-40°C to +125°C	VDD = 3.0V	FOSC = 64 MHz (**RC_RUN** mode, HFINTOSC + PLL source)
D044		6.8	9.5	mA	-40°C to +125°C	VDD = 5.0V	

Note 1: The supply current is mainly a function of operating voltage, frequency and mode. Other factors, such as I/O pin loading and switching rate, oscillator type and circuit, internal code execution pattern and temperature, also have an impact on the current consumption.
Test condition: All Peripheral Module Control bits in PMD0, PMD1 and PMD2 set to '1'.

2: The test conditions for all IDD measurements in active operation mode are:
All I/O pins set as outputs driven to Vss;
$\overline{\text{MCLR}}$ = VDD;
OSC1 = external square wave, from rail-to-rail (PRI_RUN and PRI_IDLE only).

27.4 DC Characteristics: RC Idle Supply Current, PIC18(L)F2X/4XK22

PIC18LF2X/4XK22		Standard Operating Conditions (unless otherwise stated) Operating temperature -40°C ≤ TA ≤ +125°C					
PIC18F2X/4XK22		**Standard Operating Conditions (unless otherwise stated)** Operating temperature -40°C ≤ TA ≤ +125°C					
Param No.	**Device Characteristics**	**Typ**	**Max**	**Units**	**Conditions**		
D045	Supply Current (IDD)(1),(2)	0.5	18	μA	-40°C	VDD = 1.8V	FOSC = 31 kHz (**RC_IDLE** mode, LFINTOSC source)
		0.6	18	μA	+25°C		
		0.7	—	μA	+60°C		
		0.75	20	μA	+85°C		
		2.3	22	μA	+125°C		
D046		1.1	20	μA	-40°C	VDD = 3.0V	
		1.2	20	μA	+25°C		
		1.3	—	μA	+60°C		
		1.4	22	μA	+85°C		
		3.2	25	μA	+125°C		
D047		17	30	μA	-40°C	VDD = 2.3V	FOSC = 31 kHz (**RC_IDLE** mode, LFINTOSC source)
		13	30	μA	+25°C		
		14	30	μA	+85°C		
		15	45	μA	+125°C		
D048		19	35	μA	-40°C	VDD = 3.0V	
		15	35	μA	+25°C		
		16	35	μA	+85°C		
		17	50	μA	+125°C		
D049		21	40	μA	-40°C	VDD = 5.0V	
		15	40	μA	+25°C		
		16	40	μA	+85°C		
		18	60	μA	+125°C		
D050		0.11	0.20	mA	-40°C to +125°C	VDD = 1.8V	FOSC = 500 kHz (**RC_IDLE** mode, MFINTOSC source)
D051		0.12	0.25	mA	-40°C to +125°C	VDD = 3.0V	
D052		0.14	0.21	mA	-40°C to +125°C	VDD = 2.3V	FOSC = 500 kHz (**RC_IDLE** mode, MFINTOSC source)
D053		0.15	0.25	mA	-40°C to +125°C	VDD = 3.0V	
D054		0.20	0.31	mA	-40°C to +125°C	VDD = 5.0V	

Note 1: The supply current is mainly a function of operating voltage, frequency and mode. Other factors, such as I/O pin loading and switching rate, oscillator type and circuit, internal code execution pattern and temperature, also have an impact on the current consumption.
Test condition: All Peripheral Module Control bits in PMD0, PMD1 and PMD2 set to ‘1’.

2: The test conditions for all IDD measurements in active operation mode are:
All I/O pins set as outputs driven to Vss;
MCLR = VDD;
OSC1 = external square wave, from rail-to-rail (PRI_RUN and PRI_IDLE only).

© 2010-2016 Microchip Technology Inc.

27.4 DC Characteristics: RC Idle Supply Current, PIC18(L)F2X/4XK22 (Continued)

PIC18LF2X/4XK22		Standard Operating Conditions (unless otherwise stated) Operating temperature -40°C ≤ TA ≤ +125°C					
PIC18F2X/4XK22		**Standard Operating Conditions (unless otherwise stated)** Operating temperature -40°C ≤ TA ≤ +125°C					
Param No.	**Device Characteristics**	**Typ**	**Max**	**Units**	**Conditions**		
D055		0.25	0.40	mA	-40°C to +125°C	VDD = 1.8V	FOSC = 1 MHz (**RC_IDLE** mode, HFINTOSC source)
D056		0.35	0.50	mA	-40°C to +125°C	VDD = 3.0V	
D057		0.30	0.45	mA	-40°C to +125°C	VDD = 2.3V	FOSC = 1 MHz (**RC_IDLE** mode, HFINTOSC source)
D058		0.40	0.50	mA	-40°C to +125°C	VDD = 3.0V	
D059		0.45	0.60	mA	-40°C to +125°C	VDD = 5.0V	
D060		0.50	0.7	mA	-40°C to +125°C	VDD = 1.8V	FOSC = 16 MHz (**RC_IDLE** mode, HFINTOSC source)
D061		0.80	1.1	mA	-40°C to +125°C	VDD = 3.0V	
D062		0.65	1.0	mA	-40°C to +125°C	VDD = 2.3V	FOSC = 16 MHz (**RC_IDLE** mode, HFINTOSC source)
D063		0.80	1.1	mA	-40°C to +125°C	VDD = 3.0V	
D064		0.95	1.2	mA	-40°C to +125°C	VDD = 5.0V	
D066		2.5	3.5	mA	-40°C to +125°C	VDD = 3.0V	FOSC = 64 MHz (**RC_IDLE** mode, HFINTOSC + PLL source)
D068		2.5	3.5	mA	-40°C to +125°C	VDD = 3.0V	FOSC = 64 MHz (**RC_IDLE** mode, HFINTOSC + PLL source)
D069		3.0	4.5	mA	-40°C to +125°C	VDD = 5.0V	

Note 1: The supply current is mainly a function of operating voltage, frequency and mode. Other factors, such as I/O pin loading and switching rate, oscillator type and circuit, internal code execution pattern and temperature, also have an impact on the current consumption.
Test condition: All Peripheral Module Control bits in PMD0, PMD1 and PMD2 set to ‘1’.

2: The test conditions for all IDD measurements in active operation mode are:
All I/O pins set as outputs driven to Vss;
$\overline{\text{MCLR}}$ = VDD;
OSC1 = external square wave, from rail-to-rail (PRI_RUN and PRI_IDLE only).

27.5 DC Characteristics: Primary Run Supply Current, PIC18(L)F2X/4XK22

PIC18LF2X/4XK22		Standard Operating Conditions (unless otherwise stated) Operating temperature -40°C ≤ TA ≤ +125°C					
PIC18F2X/4XK22		**Standard Operating Conditions (unless otherwise stated)** Operating temperature -40°C ≤ TA ≤ +125°C					
Param No.	**Device Characteristics**	**Typ**	**Max**	**Units**	**Conditions**		
D070	Supply Current (IDD)(1),(2)	0.11	0.20	mA	-40°C to +125°C	VDD = 1.8V	FOSC = 1 MHz (**PRI_RUN** mode, ECM source)
D071		0.17	0.25	mA	-40°C to +125°C	VDD = 3.0V	
D072		0.15	0.25	mA	-40°C to +125°C	VDD = 2.3V	FOSC = 1 MHz (**PRI_RUN** mode, ECM source)
D073		0.20	0.30	mA	-40°C to +125°C	VDD = 3.0V	
D074		0.25	0.35	mA	-40°C to +125°C	VDD = 5.0V	
D075		1.45	2.0	mA	-40°C to +125°C	VDD = 1.8V	FOSC = 20 MHz (**PRI_RUN** mode, ECH source)
D076		2.60	3.5	mA	-40°C to +125°C	VDD = 3.0V	
D077		1.95	2.5	mA	-40°C to +125°C	VDD = 2.3V	FOSC = 20 MHz (**PRI_RUN** mode, ECH source)
D078		2.65	3.5	mA	-40°C to +125°C	VDD = 3.0V	
D079		2.95	4.5	mA	-40°C to +125°C	VDD = 5.0V	
D080		7.5	10	mA	-40°C to +125°C	VDD = 3.0V	FOSC = 64 MHz (**PRI_RUN**, ECH oscillator)
D081		7.5	10	mA	-40°C to +125°C	VDD = 3.0V	FOSC = 64 MHz (**PRI_RUN** mode, ECH source)
D082		8.5	11.5	mA	-40°C to +125°C	VDD = 5.0V	
D083		1.0	1.5	mA	-40°C to +125°C	VDD = 1.8V	FOSC = 4 MHz 16 MHz Internal (**PRI_RUN** mode, ECM + PLL source)
D084		1.8	3.0	mA	-40°C to +125°C	VDD = 3.0V	
D085		1.4	2.0	mA	-40°C to +125°C	VDD = 2.3V	FOSC = 4 MHz 16 MHz Internal (**PRI_RUN** mode, ECM + PLL source)
D086		1.85	2.5	mA	-40°C to +125°C	VDD = 3.0V	
D087		2.1	3.0	mA	-40°C to +125°C	VDD = 5.0V	
D088		6.35	9.0	mA	-40°C to +125°C	VDD = 3.0V	FOSC = 16 MHz 64 MHz Internal (**PRI_RUN** mode, ECH + PLL source)
D089		6.35	9.0	mA	-40°C to +125°C	VDD = 3.0V	FOSC = 16 MHz 64 MHz Internal (**PRI_RUN** mode, ECH + PLL source)
D090		7.0	10	mA	-40°C to +125°C	VDD = 5.0V	

Note 1: The supply current is mainly a function of operating voltage, frequency and mode. Other factors, such as I/O pin loading and switching rate, oscillator type and circuit, internal code execution pattern and temperature, also have an impact on the current consumption.
Test condition: All Peripheral Module Control bits in PMD0, PMD1 and PMD2 set to '1'.

2: The test conditions for all IDD measurements in active operation mode are:
All I/O pins set as outputs driven to Vss;
MCLR = VDD;
OSC1 = external square wave, from rail-to-rail (PRI_RUN and PRI_IDLE only).

© 2010-2016 Microchip Technology Inc.

27.6 DC Characteristics: Primary Idle Supply Current, PIC18(L)F2X/4XK22

PIC18LF2X/4XK22		Standard Operating Conditions (unless otherwise stated) Operating temperature -40°C ≤ TA ≤ +125°C					
PIC18F2X/4XK22		**Standard Operating Conditions (unless otherwise stated)** Operating temperature -40°C ≤ TA ≤ +125°C					
Param No.	**Device Characteristics**	**Typ**	**Max**	**Units**	**Conditions**		
D100	Supply Current (IDD)(1),(2)	0.030	0.050	mA	-40°C to +125°C	VDD = 1.8V	Fosc = 1 MHz (**PRI_IDLE** mode, ECM source)
D101		0.045	0.065	mA	-40°C to +125°C	VDD = 3.0V	
D102		0.06	0.12	mA	-40°C to +125°C	VDD = 2.3V	Fosc = 1 MHz (**PRI_IDLE** mode, ECM source)
D103		0.08	0.15	mA	-40°C to +125°C	VDD = 3.0V	
D104		0.13	0.20	mA	-40°C to +125°C	VDD = 5.0V	
D105		0.45	0.8	mA	-40°C to +125°C	VDD = 1.8V	Fosc = 20 MHz (**PRI_IDLE** mode, ECH source)
D106		0.70	1.0	mA	-40°C to +125°C	VDD = 3.0V	
D107		0.55	0.8	mA	-40°C to +125°C	VDD = 2.3V	Fosc = 20 MHz (**PRI_IDLE** mode, ECH source)
D108		0.75	1.0	mA	-40°C to +125°C	VDD = 3.0V	
D109		0.90	1.2	mA	-40°C to +125°C	VDD = 5.0V	
D110		2.25	3.0	mA	-40°C to +125°C	VDD = 3.0V	Fosc = 64 MHz (**PRI_IDLE** mode, ECH source)
D111		2.25	3.0	mA	-40°C to +125°C	VDD = 3.0V	Fosc = 64 MHz (**PRI_IDLE** mode, ECH source)
D112		2.60	3.5	mA	-40°C to +125°C	VDD = 5.0V	
D113		0.35	0.6	mA	-40°C to +125°C	VDD = 1.8V	Fosc = 4 MHz 16 MHz Internal (**PRI_IDLE** mode, ECM + PLL source)
D114		0.55	0.8	mA	-40°C to +125°C	VDD = 3.0V	
D115		0.45	0.6	mA	-40°C to +125°C	VDD = 2.3V	Fosc = 4 MHz 16 MHz Internal (**PRI_IDLE** mode, ECM + PLL source)
D116		0.60	0.9	mA	-40°C to +125°C	VDD = 3.0V	
D117		0.70	1.0	mA	-40°C to +125°C	VDD = 5.0V	
D118		2.2	3.0	mA	-40°C to +125°C	VDD = 3.0V	Fosc = 16 MHz 64 MHz Internal (**PRI_IDLE** mode, ECH + PLL source)
D119		2.2	3.0	mA	-40°C to +125°C	VDD = 3.0V	Fosc = 16 MHz 64 MHz Internal (**PRI_IDLE** mode, ECH + PLL source)
D120		2.5	3.5	mA	-40°C to +125°C	VDD = 5.0V	

Note 1: The supply current is mainly a function of operating voltage, frequency and mode. Other factors, such as I/O pin loading and switching rate, oscillator type and circuit, internal code execution pattern and temperature, also have an impact on the current consumption.
Test condition: All Peripheral Module Control bits in PMD0, PMD1 and PMD2 set to '1'.

2: The test conditions for all IDD measurements in active operation mode are:
All I/O pins set as outputs driven to Vss;
MCLR = VDD;
OSC1 = external square wave, from rail-to-rail (PRI_RUN and PRI_IDLE only).

27.7 DC Characteristics: Secondary Oscillator Supply Current, PIC18(L)F2X/4XK22

PIC18LF2X/4XK22		Standard Operating Conditions (unless otherwise stated) Operating temperature -40°C ≤ TA ≤ +125°C					
PIC18F2X/4XK22		**Standard Operating Conditions (unless otherwise stated)** Operating temperature -40°C ≤ TA ≤ +125°C					
Param No.	**Device Characteristics**	**Typ**	**Max**	**Units**	**Conditions**		
D130	Supply Current (IDD)(1),(2)	3.5	23	μA	-40°C	VDD = 1.8V	Fosc = 32 kHz (**SEC_RUN** mode, SOSC source)
		3.7	25	μA	+25°C		
		3.8	—	μA	+60°C		
		4.0	28	μA	+85°C		
		5.1	30	μA	+125°C		
D131		6.2	26	μA	-40°C	VDD = 3.0V	
		6.4	30	μA	+25°C		
		6.5	—	μA	+60°C		
		6.8	35	μA	+85°C		
		7.8	40	μA	+125°C		
D132		15	35	μA	-40°C	VDD = 2.3V	Fosc = 32 kHz (**SEC_RUN** mode, SOSC source)
		16	35	μA	+25°C		
		17	35	μA	+85°C		
		19	50	μA	+125°C		
D133		18	50	μA	-40°C	VDD = 3.0V	
		19	50	μA	+25°C		
		21	50	μA	+85°C		
		22	60	μA	+125°C		
D134		19	55	μA	-40°C	VDD = 5.0V	
		20	55	μA	+25°C		
		22	55	μA	+85°C		
		23	70	μA	+125°C		

Note 1: The supply current is mainly a function of operating voltage, frequency and mode. Other factors, such as I/O pin loading and switching rate, oscillator type and circuit, internal code execution pattern and temperature, also have an impact on the current consumption.
Test condition: All Peripheral Module Control bits in PMD0, PMD1 and PMD2 set to ‘1’.

2: The test conditions for all IDD measurements in active operation mode are:
All I/O pins set as outputs driven to Vss;
$\overline{\text{MCLR}}$ = VDD;
SOSCI / SOSCO = complementary external square wave, from rail-to-rail.

© 2010-2016 Microchip Technology Inc.

27.7 DC Characteristics: Secondary Oscillator Supply Current, PIC18(L)F2X/4XK22

PIC18LF2X/4XK22		Standard Operating Conditions (unless otherwise stated) Operating temperature -40°C ≤ TA ≤ +125°C					
PIC18F2X/4XK22		**Standard Operating Conditions (unless otherwise stated)** Operating temperature -40°C ≤ TA ≤ +125°C					
Param No.	**Device Characteristics**	**Typ**	**Max**	**Units**	**Conditions**		
D135		0.9	18	μA	-40°C	VDD = 1.8V	Fosc = 32 kHz (**SEC_IDLE** mode, SOSC source)
		1.0	18	μA	+25°C		
		1.1	—	μA	+60°C		
		1.3	20	μA	+85°C		
		2.3	22	μA	+125°C		
D136		1.3	20	μA	-40°C	VDD = 3.0V	
		1.4	20	μA	+25°C		
		1.5	—	μA	+60°C		
		1.8	22	μA	+85°C		
		2.9	25	μA	+125°C		
D137		12	30	μA	-40°C	VDD = 2.3V	Fosc = 32 kHz (**SEC_IDLE** mode, SOSC source)
		13	30	μA	+25°C		
		14	30	μA	+85°C		
		16	45	μA	+125°C		
D138		13	35	μA	-40°C	VDD = 3.0V	
		14	35	μA	+25°C		
		16	35	μA	+85°C		
		18	50	μA	+125°C		
D139		14	40	μA	-40°C	VDD = 5.0V	
		15	40	μA	+25°C		
		16	40	μA	+85°C		
		18	60	μA	+125°C		

Note 1: The supply current is mainly a function of operating voltage, frequency and mode. Other factors, such as I/O pin loading and switching rate, oscillator type and circuit, internal code execution pattern and temperature, also have an impact on the current consumption.
Test condition: All Peripheral Module Control bits in PMD0, PMD1 and PMD2 set to ‘1’.

2: The test conditions for all IDD measurements in active operation mode are:
All I/O pins set as outputs driven to Vss;
MCLR = VDD;
SOSCI / SOSCO = complementary external square wave, from rail-to-rail.

27.8 DC Characteristics: Input/Output Characteristics, PIC18(L)F2X/4XK22

DC CHARACTERISTICS			Standard Operating Conditions (unless otherwise stated) Operating temperature -40°C ≤ TA ≤ +125°C				
Param No.	**Symbol**	**Characteristic**	**Min**	**Typ†**	**Max**	**Units**	**Conditions**
	VIL	**Input Low Voltage**					
		I/O PORT:					
D140		with TTL buffer	—	—	0.8	V	4.5V ≤ VDD ≤ 5.5V
D140A			—	—	0.15 VDD	V	1.8V ≤ VDD ≤ 4.5V
D141		with Schmitt Trigger buffer	—	—	0.2 VDD	V	2.0V ≤ VDD ≤ 5.5V
		with I²C levels	—	—	0.3 VDD	V	
		with SMBus levels	—	—	0.8	V	2.7V ≤ VDD ≤ 5.5V
D142		$\overline{\text{MCLR}}$, OSC1 (RC mode)(1)	—	—	0.2 VDD	V	
D142A		OSC1 (HS mode)	—	—	0.3 VDD	V	
	VIH	**Input High Voltage**					
		I/O ports:		—	—		
D147		with TTL buffer	2.0	—	—	V	4.5V ≤ VDD ≤ 5.5V
D147A			0.25 VDD + 0.8	—	—	V	1.8V ≤ VDD ≤ 4.5V
D148		with Schmitt Trigger buffer	0.8 VDD	—	—	V	2.0V ≤ VDD ≤ 5.5V
		with I²C levels	0.7 VDD	—	—	V	
		with SMBus levels	2.1	—	—	V	2.7V ≤ VDD ≤ 5.5V
D149		$\overline{\text{MCLR}}$	0.8 VDD	—	—	V	
D150A		OSC1 (HS mode)	0.7 VDD	—	—	V	
D150B		OSC1 (RC mode)(1)	0.9 VDD	—	—	V	
	IIL	**Input Leakage I/O and $\overline{\text{MCLR}}$(2),(3)**					VSS ≤ VPIN ≤ VDD, Pin at high-impedance
D155		I/O ports and $\overline{\text{MCLR}}$	— — — —	0.1 0.7 4 35	50 100 200 1000	nA nA nA nA	≤ +25°C(4) +60°C +85°C +125°C
	IPU	**Weak Pull-up Current(4)**					
D158	IPURB	PORTB weak pull-up current	25 25	85 130	200 300	μA μA	VDD = 3.3V, VPIN = VSS VDD = 5.0V, VPIN = VSS

Note 1: In RC oscillator configuration, the OSC1/CLKIN pin is a Schmitt Trigger input. It is not recommended that the PIC® device be driven with an external clock while in RC mode.

2: The leakage current on the $\overline{\text{MCLR}}$ pin is strongly dependent on the applied voltage level. The specified levels represent normal operating conditions. Higher leakage current may be measured at different input voltages.

3: Negative current is defined as current sourced by the pin.

4: Parameter is characterized but not tested.

© 2010-2016 Microchip Technology Inc.

27.8 DC Characteristics: Input/Output Characteristics, PIC18(L)F2X/4XK22 (Continued)

DC CHARACTERISTICS			Standard Operating Conditions (unless otherwise stated) Operating temperature -40°C ≤ TA ≤ +125°C				
Param No.	**Symbol**	**Characteristic**	**Min**	**Typ†**	**Max**	**Units**	**Conditions**
D159	VOL	**Output Low Voltage** I/O ports	—	—	0.6	V	IOL = 8 mA, VDD = 5V IOL = 6 mA, VDD = 3.3V IOL = 1.8 mA, VDD = 1.8V
D161	VOH	**Output High Voltage(3)** I/O ports	VDD - 0.7	—	—	V	IOH = 3.5 mA, VDD = 5V IOH = 3 mA, VDD = 3.3V IOH = 1 mA, VDD = 1.8V

Note 1: In RC oscillator configuration, the OSC1/CLKIN pin is a Schmitt Trigger input. It is not recommended that the PIC® device be driven with an external clock while in RC mode.

2: The leakage current on the $\overline{\text{MCLR}}$ pin is strongly dependent on the applied voltage level. The specified levels represent normal operating conditions. Higher leakage current may be measured at different input voltages.

3: Negative current is defined as current sourced by the pin.

4: Parameter is characterized but not tested.

27.9 Memory Programming Requirements

DC CHARACTERISTICS			Standard Operating Conditions (unless otherwise stated) Operating temperature -40°C ≤ TA ≤ +125°C				
Param No.	**Sym**	**Characteristic**	**Min**	**Typ†**	**Max**	**Units**	**Conditions**
		Internal Program Memory Programming Specifications(1)					
D170	VPP	Voltage on $\overline{\text{MCLR}}$/VPP pin	8	—	9	V	**(Note 3), (Note 4)**
D171	IDDP	Supply Current during Programming	—	—	10	mA	
		Data EEPROM Memory					
D172	ED	Byte Endurance	100K	—	—	E/W	-40°C to +85°C
D173	VDRW	VDD for Read/Write	VDDMIN	—	VDDMAX	V	Using EECON to read/ write
D175	TDEW	Erase/Write Cycle Time	—	3	4	ms	
D176	TRETD	Characteristic Retention	—	40	—	Year	Provided no other specifications are violated
D177	TREF	Number of Total Erase/Write Cycles before Refresh(2)	1M	10M	—	E/W	-40°C to +85°C
		Program Flash Memory					
D178	EP	Cell Endurance	10K	—	—	E/W	-40°C to +85°C **(Note 5)**
D179	VPR	VDD for Read	VDDMIN	—	VDDMAX	V	
D181	VIW	VDD for Row Erase or Write	2.2	—	VDDMAX	V	PIC18LF24K22
D182	VIW		VDDMIN	—	VDDMAX	V	PIC18(L)F26K22
D183	TIW	Self-timed Write Cycle Time	—	2	—	ms	
D184	TRETD	Characteristic Retention	—	40	—	Year	Provided no other specifications are violated

† Data in “Typ” column is at 3.0V, 25°C unless otherwise stated. These parameters are for design guidance only and are not tested.

Note 1: These specifications are for programming the on-chip program memory through the use of table write instructions.

2: Refer to **Section 7.8 “Using the Data EEPROM”** for a more detailed discussion on data EEPROM endurance.

3: Required only if single-supply programming is disabled.

4: The MPLAB ICD 2 does not support variable VPP output. Circuitry to limit the MPLAB ICD 2 VPP voltage must be placed between the MPLAB ICD 2 and target system when programming or debugging with the MPLAB ICD 2.

5: Self-write and Block Erase.

© 2010-2016 Microchip Technology Inc.

27.10 Analog Characteristics

TABLE 27-1: COMPARATOR SPECIFICATIONS

Operating Conditions: 1.8V < VDD < 5.5V, -40°C < TA < +125°C (unless otherwise stated)							
Param No.	**Sym**	**Characteristics**	**Min**	**Typ**	**Max**	**Units**	**Comments**
CM01	VIOFF	Input Offset Voltage	—	3	40	mV	High-Power mode VREF = VDD/2
			—	4	60	mV	Low-Power mode VREF = VDD/2
CM02	VICM	Input Common-mode Voltage	VSS	—	VDD	V	
CM04*	TRESP	Response Time(1)	—	200	400	ns	High-Power mode
			—	600	3500	ns	Low-Power mode
CM05*	TMC2OV	Comparator Mode Change to Output Valid	—	—	10	µs	

* These parameters are characterized but not tested.

Note 1: Response time measured with one comparator input at VDD/2, while the other input transitions from VSS to VDD.

TABLE 27-2: DIGITAL-TO-ANALOG CONVERTER (DAC) SPECIFICATIONS

Operating Conditions: 2.0V < VDD < 5.5V, -40°C < TA < +125°C (unless otherwise stated)							
Param No.	**Sym**	**Characteristics**	**Min**	**Typ**	**Max**	**Units**	**Comments**
CV01*	CLSB	Step Size(2)	—	VDD/32	—	V	
CV02*	CACC	Absolute Accuracy	—	—	± 1/2	LSb	ΔVSRC ≥ 2.0V
CV03*	CR	Unit Resistor Value (R)	—	5k	—	Ω	
CV04*	CST	Settling Time(1)	—	—	10	µs	
CV05*	VSRC+	DAC Positive Reference	VSRC- +2	—	VDD	V	
CV06*	VSRC-	DAC Negative Reference	VSS	—	VSRC+ -2	V	
CV07*	ΔVSRC	DAC Reference Range (VSRC+ - VSRC-)	2	—	VDD	V	

* These parameters are characterized but not tested.

Note 1: Settling time measured while CVRR = 1 and CVR3:CVR0 transitions from ‘0000’ to ‘1111’.

2: See **Section 22.0 “Digital-to-Analog Converter (DAC) Module”** for more information.

TABLE 27-3: FIXED VOLTAGE REFERENCE (FVR) SPECIFICATIONS

Operating Conditions: -40°C < TA < +125°C (unless otherwise stated)							
Param No.	**Sym**	**Characteristics**	**Min**	**Typ**	**Max**	**Units**	**Comments**
VR01	VROUT	VR voltage output to ADC	0.973	1.024	1.085	V	1x output, VDD ≥ 2.5V
			1.946	2.048	2.171	V	2x output, VDD ≥ 2.5V
			3.891	4.096	4.342	V	4x output, VDD ≥ 4.75V (PIC18F2X/4XK22)
VR02	VROUT	VR voltage output all other modules	0.942	1.024	1.096	V	1x output, VDD ≥ 2.5V
			1.884	2.048	2.191	V	2x output, VDD ≥ 2.5V
			3.768	4.096	4.383	V	4x output, VDD ≥ 4.75V (PIC18F2X/4XK22)
VR04*	TSTABLE	Settling Time	—	25	100	μs	0 to 125°C

* These parameters are characterized but not tested.

TABLE 27-4: CHARGE TIME MEASUREMENT UNIT (CTMU) SPECIFICATIONS

Operating Conditions: 1.8V < VDD < 5.5V, -40°C < TA < +125°C (unless otherwise stated)							
Param No.	**Sym**	**Characteristics**	**Min**	**Typ(1)**	**Max**	**Units**	**Comments**
CT01	IOUT1	CTMU Current Source, Base Range	—	0.55	—	μA	IRNG<1:0>=01
CT02	IOUT2	CTMU Current Source, 10X Range	—	5.5	—	μA	IRNG<1:0>=10
CT03	IOUT3	CTMU Current Source, 100X Range	—	55	—	μA	IRNG<1:0>=11 VDD ≥ 3.0V

Note 1: Nominal value at center point of current trim range (CTMUICON<7:2>=000000).

© 2010-2016 Microchip Technology Inc.

FIGURE 27-5: HIGH/LOW-VOLTAGE DETECT CHARACTERISTICS

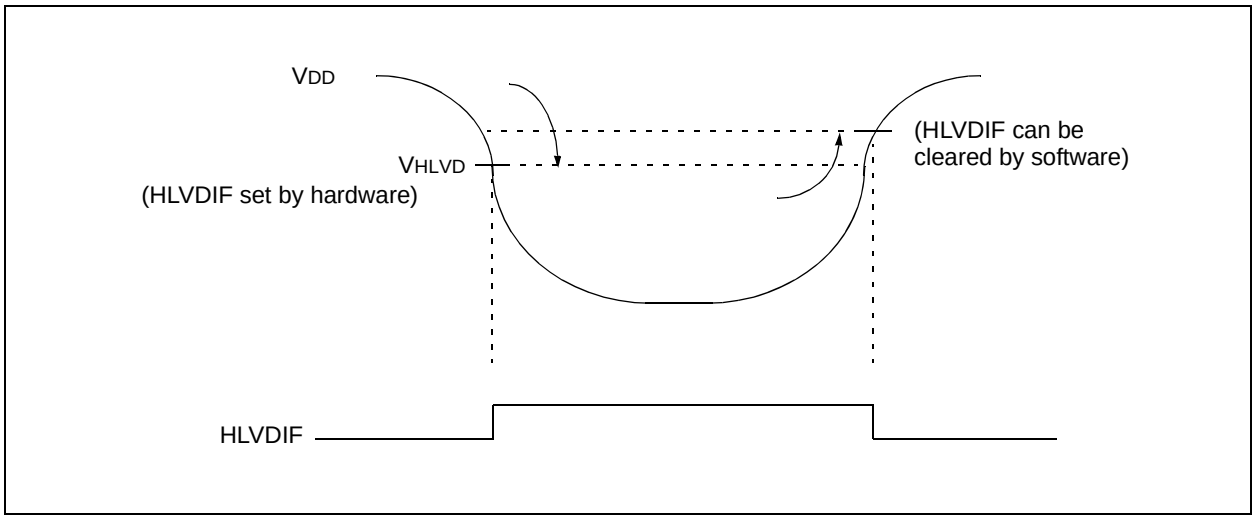

TABLE 27-5: HIGH/LOW-VOLTAGE DETECT CHARACTERISTICS

Standard Operating Conditions (unless otherwise stated)
Operating temperature -40°C ≤ TA ≤ +125°C

Param No.	Symbol	Characteristic	HLVDL<3:0>	Min	Typ†	Max	Units	Conditions
		HLVD Voltage on VDD Transition High-to-Low	0000	1.69	1.84	1.99	V	
			0001	1.92	2.07	2.22	V	
			0010	2.08	2.28	2.48	V	
			0011	2.24	2.44	2.64	V	
			0100	2.34	2.54	2.74	V	
			0101	2.54	2.74	2.94	V	
			0110	2.62	2.87	3.12	V	
			0111	2.76	3.01	3.26	V	
			1000	3.00	3.30	3.60	V	
			1001	3.18	3.48	3.78	V	
			1010	3.44	3.69	3.94	V	
			1011	3.66	3.91	4.16	V	
			1100	3.90	4.15	4.40	V	
			1101	4.11	4.41	4.71	V	
			1110	4.39	4.74	5.09	V	
			1111	V(HLVDIN pin)			v	

† Production tested at TAMB = 25°C. Specifications over temperature limits ensured by characterization.

27.11 AC (Timing) Characteristics

27.11.1 TIMING PARAMETER SYMBOLOGY

The timing parameter symbols have been created using one of the following formats:

1. TppS2ppS
2. TppS
3. TCC:ST (I^{2}C specifications only)
4. Ts (I^{2}C specifications only)

T			
F	Frequency	T	Time

Lowercase letters (pp) and their meanings:

pp			
cc	CCP1	osc	OSC1
ck	CLKOUT	rd	$\overline{RD}$
cs	$\overline{CS}$	rw	$\overline{RD}$ or $\overline{WR}$
di	SDI	sc	SCK
do	SDO	ss	$\overline{SS}$
dt	Data in	t0	T0CKI
io	I/O port	t1	T13CKI
mc	$\overline{MCLR}$	wr	$\overline{WR}$

Uppercase letters and their meanings:

S			
F	Fall	P	Period
H	High	R	Rise
I	Invalid (High-impedance)	V	Valid
L	Low	Z	High-impedance
I^{2}C only			
AA	output access	High	High
BUF	Bus free	Low	Low

TCC:ST (I^{2}C specifications only)

CC			
HD	Hold	SU	Setup
ST			
DAT	DATA input hold	STO	Stop condition
STA	Start condition		

© 2010-2016 Microchip Technology Inc.

27.11.2 TIMING CONDITIONS

The temperature and voltages specified in Table 27-6 apply to all timing specifications unless otherwise noted. Figure 27-6 specifies the load conditions for the timing specifications.

TABLE 27-6: TEMPERATURE AND VOLTAGE SPECIFICATIONS – AC

AC CHARACTERISTICS	**Standard Operating Conditions (unless otherwise stated)** Operating temperature -40°C ≤ TA ≤ +125°C Operating voltage VDD range as described in **Section 27.1 "DC Characteristics: Supply Voltage, PIC18(L)F2X/4XK22"** and **Section 27.9 "Memory Programming Requirements"**.

FIGURE 27-6: LOAD CONDITIONS FOR DEVICE TIMING SPECIFICATIONS

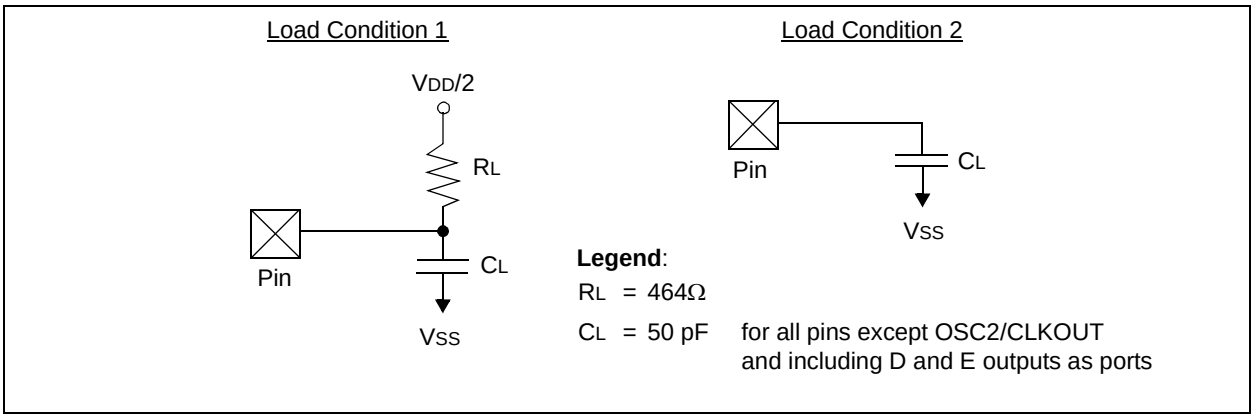

27.11.3 TIMING DIAGRAMS AND SPECIFICATIONS

FIGURE 27-7: EXTERNAL CLOCK TIMING (ALL MODES EXCEPT PLL)

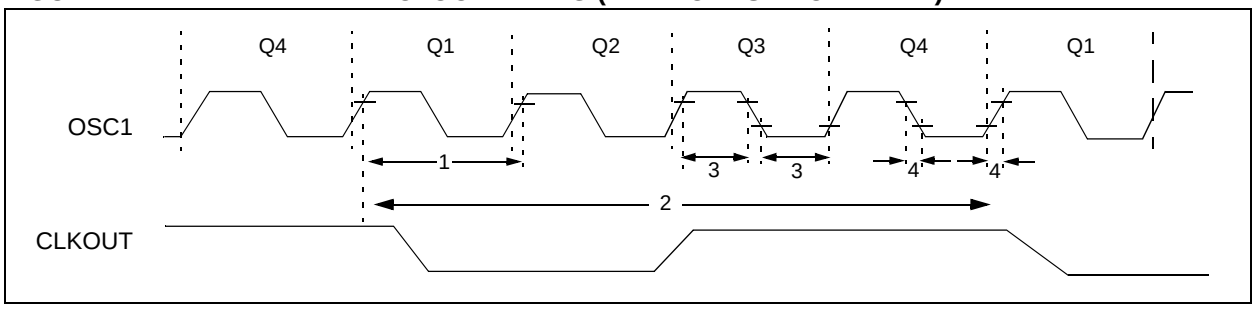

TABLE 27-7: EXTERNAL CLOCK TIMING REQUIREMENTS

Param. No.	Symbol	Characteristic	Min	Max	Units	Conditions
1A	FOSC	External CLKIN Frequency(1)	DC	0.5	MHz	EC, ECIO Oscillator mode (low power)
			DC	16	MHz	EC, ECIO Oscillator mode (medium power)
			DC	64	MHz	EC, ECIO Oscillator mode (high power)
		Oscillator Frequency(1)	DC	4	MHz	RC Oscillator mode
			5	200	kHz	LP Oscillator mode
			0.1	4	MHz	XT Oscillator mode
			4	4	MHz	HS Oscillator mode, VDD < 2.7V
			4	16	MHz	HS Oscillator mode, VDD ≥ 2.7V, Medium-Power mode (HSMP)
			4	20	MHz	HS Oscillator mode, VDD ≥ 2.7V, High-Power mode (HSHP)
1	TOSC	External CLKIN Period(1)	2.0	—	μs	EC, ECIO Oscillator mode (low power)
			62.5	—	ns	EC, ECIO Oscillator mode (medium power)
			15.6	—	ns	EC, ECIO Oscillator mode (high power)
		Oscillator Period(1)	250	—	ns	RC Oscillator mode
			5	200	μs	LP Oscillator mode
			0.25	10	μs	XT Oscillator mode
			250	250	ns	HS Oscillator mode, VDD < 2.7V
			62.5	250	ns	HS Oscillator mode, VDD ≥ 2.7V, Medium-Power mode (HSMP)
			50	250	ns	HS Oscillator mode, VDD ≥ 2.7V, High-Power mode (HSHP)
2	TCY	Instruction Cycle Time(1)	62.5	—	ns	TCY = 4/FOSC
3	TOSL, TOSH	External Clock in (OSC1) High or Low Time	2.5	—	μs	LP Oscillator mode
			30	—	ns	XT Oscillator mode
			10	—	ns	HS Oscillator mode
4	TOSR, TOSF	External Clock in (OSC1) Rise or Fall Time	—	50	ns	LP Oscillator mode
			—	20	ns	XT Oscillator mode
			—	7.5	ns	HS Oscillator mode

Note 1: Instruction cycle period (TCY) equals four times the input oscillator time base period for all configurations except PLL. All specified values are based on characterization data for that particular oscillator type under standard operating conditions with the device executing code. Exceeding these specified limits may result in an unstable oscillator operation and/or higher than expected current consumption. All devices are tested to operate at “min.” values with an external clock applied to the OSC1/CLKIN pin. When an external clock input is used, the “max.” cycle time limit is “DC” (no clock) for all devices.

© 2010-2016 Microchip Technology Inc.

TABLE 27-8: PLL CLOCK TIMING SPECIFICATIONS

Param. No.	Sym	Characteristic	Min	Max	Units	Conditions
F10	FOSC	Oscillator Frequency Range	4	5	MHz	VDD < 2.7V, -40°C to +85°C
			4	4	MHz	VDD < 2.7V, +85°C to +125°C
			4	16	MHz	2.7V ≤ VDD, -40°C to +85°C
			4	12	MHz	2.7V ≤ VDD, +85°C to +125°C
F11	FSYS	On-Chip VCO System Frequency	16	20	MHz	VDD < 2.7V, -40°C to +85°C
			16	16	MHz	VDD < 2.7V, +85°C to +125°C
			16	64	MHz	2.7V ≤ VDD, -40°C to +85°C
			16	48	MHz	2.7V ≤ VDD, +85°C to +125°C
F12	t_{rc}	PLL Start-up Time (Lock Time)	—	2	ms	

TABLE 27-9: AC CHARACTERISTICS:INTERNAL OSCILLATORS ACCURACY PIC18(L)F46K22

Standard Operating Conditions (unless otherwise stated)
Operating temperature -40°C ≤ TA ≤ +125°C

Param. No.	Characteristics	Freq. Tolerance	Min	Typ†	Max	Units	Conditions
OA1	Internal Calibrated HFINTOSC Frequency(1)	± 2%	—	16.0	—	MHz	0°C ≤ TA ≤ +60°C, VDD ≥ 2.5V
		± 3%	—	16.0	—	MHz	+60°C ≤ TA ≤ +85°C, VDD ≥ 2.5V
		± 5%	—	16.0	—	MHz	-40°C ≤ TA ≤ +125°C
OA2	Internal Calibrated MFINTOSC Frequency(1)	± 2%	—	500	—	kHz	0°C ≤ TA ≤ +60°C, VDD ≥ 2.5V
		± 3%	—	500	—	kHz	+60°C ≤ TA ≤ +85°C, VDD ≥ 2.5V
		± 5%	—	500	—	kHz	-40°C ≤ TA ≤ +125°C
OA3	Internal Calibrated LFINTOSC Frequency(1)	± 20%	—	31	—	kHz	-40°C ≤ TA ≤ +125°C

† Data in “Typ” column is at 3.0V, 25°C unless otherwise stated. These parameters are for design guidance only and are not tested.

Note 1: To ensure these oscillator frequency tolerances, VDD and VSS must be capacitively decoupled as close to the device as possible. 0.1 μF and 0.01 μF values in parallel are recommended.

FIGURE 27-8: CLKOUT AND I/O TIMING

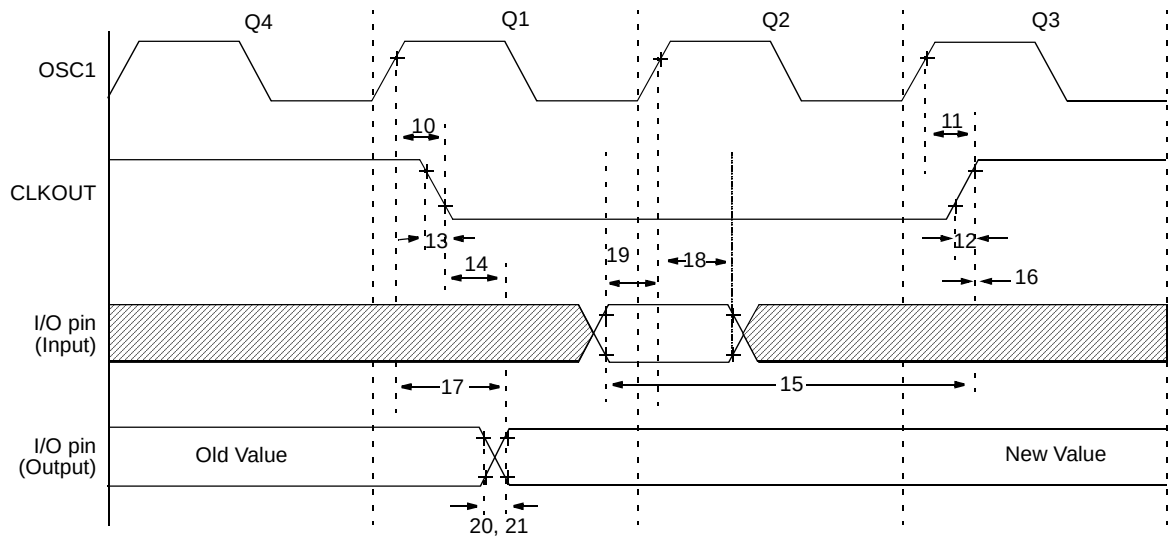

Note: Refer to Figure 27-6 for load conditions.

TABLE 27-10: CLKOUT AND I/O TIMING REQUIREMENTS

Param. No.	Symbol	Characteristic	Min	Typ	Max	Units	Conditions
10	TosH2ckL	OSC1 ↑ to CLKOUT ↓	—	75	200	ns	**(Note 1)**
11	TosH2ckH	OSC1 ↑ to CLKOUT ↑	—	75	200	ns	**(Note 1)**
12	TckR	CLKOUT Rise Time	—	35	100	ns	**(Note 1)**
13	TckF	CLKOUT Fall Time	—	35	100	ns	**(Note 1)**
14	TckL2ioV	CLKOUT ↓ to Port Out Valid	—	—	0.5 TCY + 20	ns	**(Note 1)**
15	TioV2ckH	Port In Valid before CLKOUT ↑	0.25 TCY + 25	—	—	ns	**(Note 1)**
16	TckH2ioI	Port In Hold after CLKOUT ↑	0	—	—	ns	**(Note 1)**
17	TosH2ioV	OSC1 ↑ (Q1 cycle) to Port Out Valid	—	50	150	ns	
18	TosH2ioI	OSC1 ↑ (Q2 cycle) to Port Input Invalid (I/O in hold time)	100	—	—	ns	
19	TioV2osH	Port Input Valid to OSC1 ↑ (I/O in setup time)	0	—	—	ns	
20	TioR	Port Output Rise Time	— —	40 15	72 32	ns ns	VDD = 1.8V VDD = 3.3V - 5.0V
21	TioF	Port Output Fall Time	— —	28 15	55 30	ns ns	VDD = 1.8V VDD = 3.3V - 5.0V
22†	TINP	INTx pin High or Low Time	20	—	—	ns	
23†	TRBP	RB<7:4> Change KBIx High or Low Time	TCY	—	—	ns	

† These parameters are asynchronous events not related to any internal clock edges.

Note 1: Measurements are taken in RC mode, where CLKOUT output is 4 x TOSC.

© 2010-2016 Microchip Technology Inc.

FIGURE 27-9: RESET, WATCHDOG TIMER, OSCILLATOR START-UP TIMER AND POWER-UP TIMER TIMING

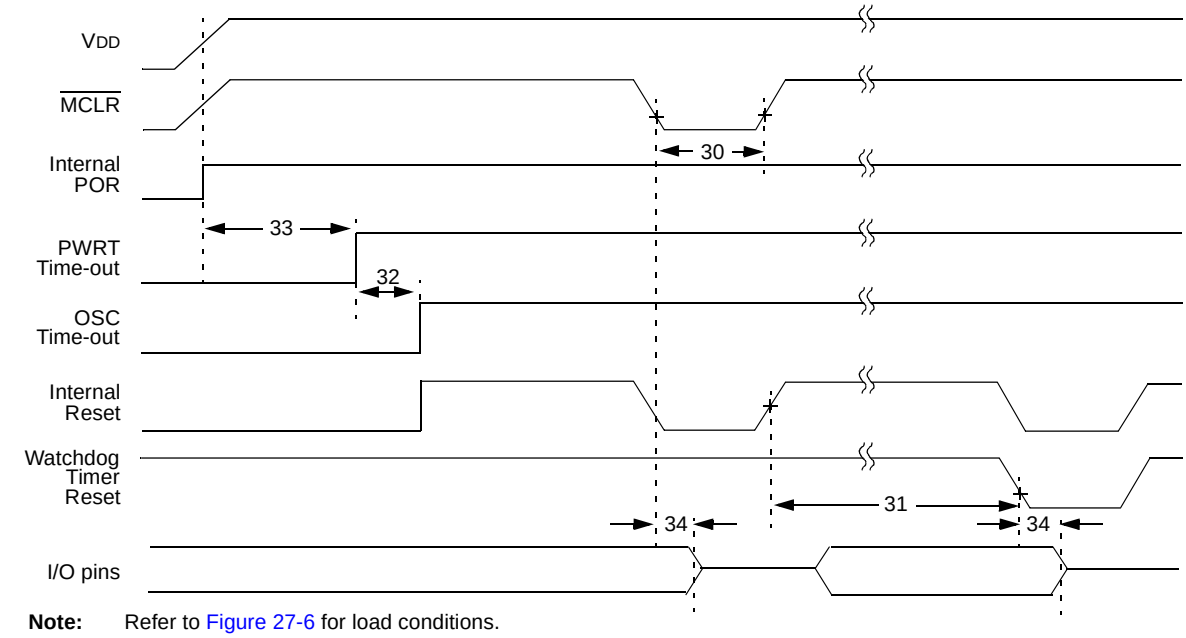

Note: Refer to Figure 27-6 for load conditions.

FIGURE 27-10: BROWN-OUT RESET TIMING

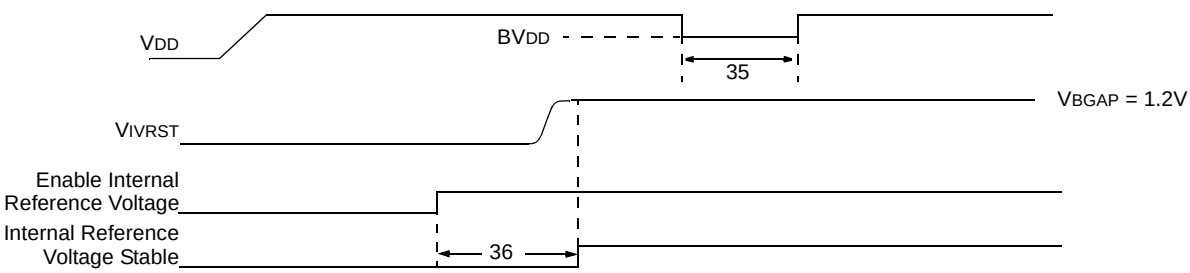

TABLE 27-11: RESET, WATCHDOG TIMER, OSCILLATOR START-UP TIMER, POWER-UP TIMER AND BROWN-OUT RESET REQUIREMENTS

Param. No.	Symbol	Characteristic	Min	Typ	Max	Units	Conditions
30	TmcL	$\overline{\text{MCLR}}$ Pulse Width (low)	2	—	—	µs	
31	TWDT	Watchdog Timer Time-out Period (no postscaler)	3.5	4.1	4.7	ms	1:1 prescaler
32	TOST	Oscillation Start-up Timer Period	1024 TOSC	—	1024 TOSC	—	TOSC = OSC1 period
33	TPWRT	Power-up Timer Period	54.8	64.4	74.1	ms	
34	TIOZ	I/O High-Impedance from $\overline{\text{MCLR}}$ Low or Watchdog Timer Reset	—	2	—	µs	
35	TBOR	Brown-out Reset Pulse Width	200[1]	—	—	µs	VDD ≤ BVDD (see D005)
36	TIVRST	Internal Reference Voltage Stable	—	25	35	µs	
37	THLVD	High/Low-Voltage Detect Pulse Width	200[1]	—	—	µs	VDD ≤ VHLVD
38	TCSD	CPU Start-up Time	5	—	10	µs	
39	TIOBST	Time for HF-INTOSC to Stabilize	—	0.25	1	ms	
40	TIOSC_ST	Time for HF-INTOSC to Start	—	TBD	TBD	µs	

Note 1: Minimum pulse width that will consistently trigger a reset or interrupt. Shorter pulses may intermittently trigger a response.

FIGURE 27-11: TIMER0 AND TIMER1 EXTERNAL CLOCK TIMINGS

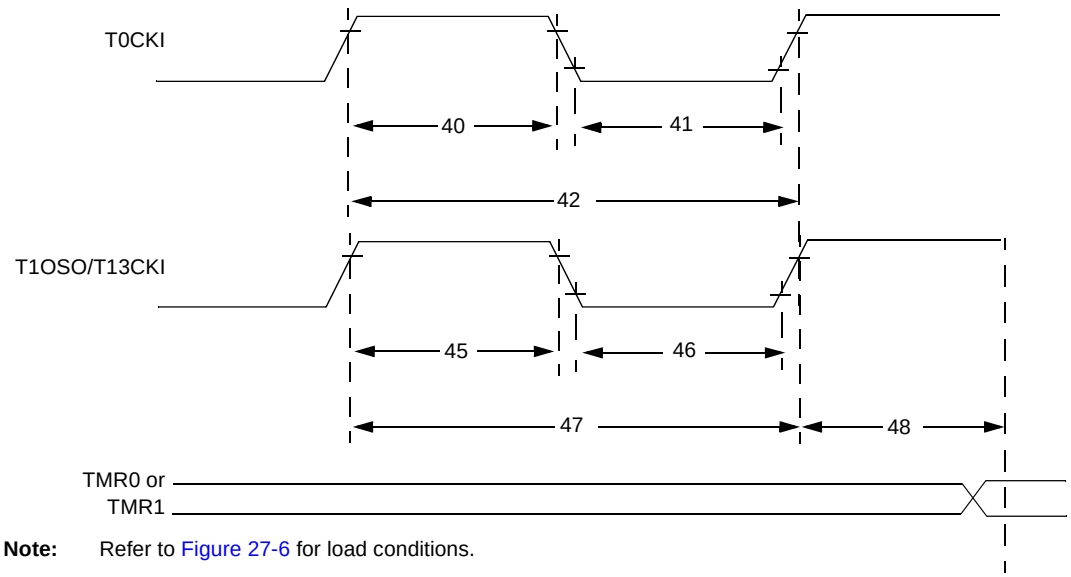

Note: Refer to Figure 27-6 for load conditions.

© 2010-2016 Microchip Technology Inc.

TABLE 27-12: TIMER0 AND TIMER1/3/5 EXTERNAL CLOCK REQUIREMENTS

Param. No.	Symbol	Characteristic		Min	Max	Units	Conditions
40	Tt0H	T0CKI High Pulse Width	No prescaler	0.5 TCY + 20	—	ns	
			With prescaler	10	—	ns	
41	Tt0L	T0CKI Low Pulse Width	No prescaler	0.5 TCY + 20	—	ns	
			With prescaler	10	—	ns	
42	Tt0P	T0CKI Period	No prescaler	TCY + 10	—	ns	
			With prescaler	Greater of: 20 ns or (TCY + 40)/N	—	ns	N = prescale value (1, 2, 4,..., 256)
45	Tt1H	TxCKI High Time	Synchronous, no prescaler	0.5 TCY + 20	—	ns	
			Synchronous, with prescaler	10	—	ns	
			Asynchronous	30	—	ns	
46	Tt1L	TxCKI Low Time	Synchronous, no prescaler	0.5 TCY + 5	—	ns	
			Synchronous, with prescaler	10	—	ns	
			Asynchronous	30	—	ns	
47	Tt1P	TxCKI Input Period	Synchronous	Greater of: 20 ns or (TCY + 40)/N	—	ns	N = prescale value (1, 2, 4, 8)
			Asynchronous	60	—	ns	
	Ft1	TxCKI Clock Input Frequency Range		DC	50	kHz	
48	Tcke2tmrI	Delay from External TxCKI Clock Edge to Timer Increment		2 TOSC	7 TOSC	—	

FIGURE 27-12: CAPTURE/COMPARE/PWM TIMINGS (ALL CCP MODULES)

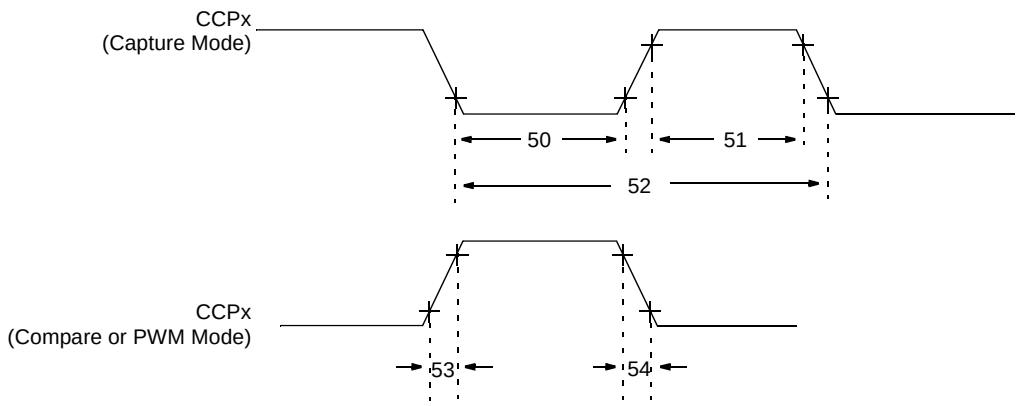

Note: Refer to Figure 27-6 for load conditions.

TABLE 27-13: CAPTURE/COMPARE/PWM REQUIREMENTS (ALL CCP MODULES)

Param. No.	Symbol	Characteristic		Min	Max	Units	Conditions
50	TccL	CCPx Input Low Time	No prescaler	0.5 TCY + 20	—	ns	
			With prescaler	10	—	ns	
51	TccH	CCPx Input High Time	No prescaler	0.5 TCY + 20	—	ns	
			With prescaler	10	—	ns	
52	TccP	CCPx Input Period		$\frac{3\ T_{CY} + 40}{N}$	—	ns	N = prescale value (1, 4 or 16)
53	TccR	CCPx Output Fall Time		—	25	ns	
54	TccF	CCPx Output Fall Time		—	25	ns	

© 2010-2016 Microchip Technology Inc.

FIGURE 27-13: EXAMPLE SPI MASTER MODE TIMING (CKE = 0)

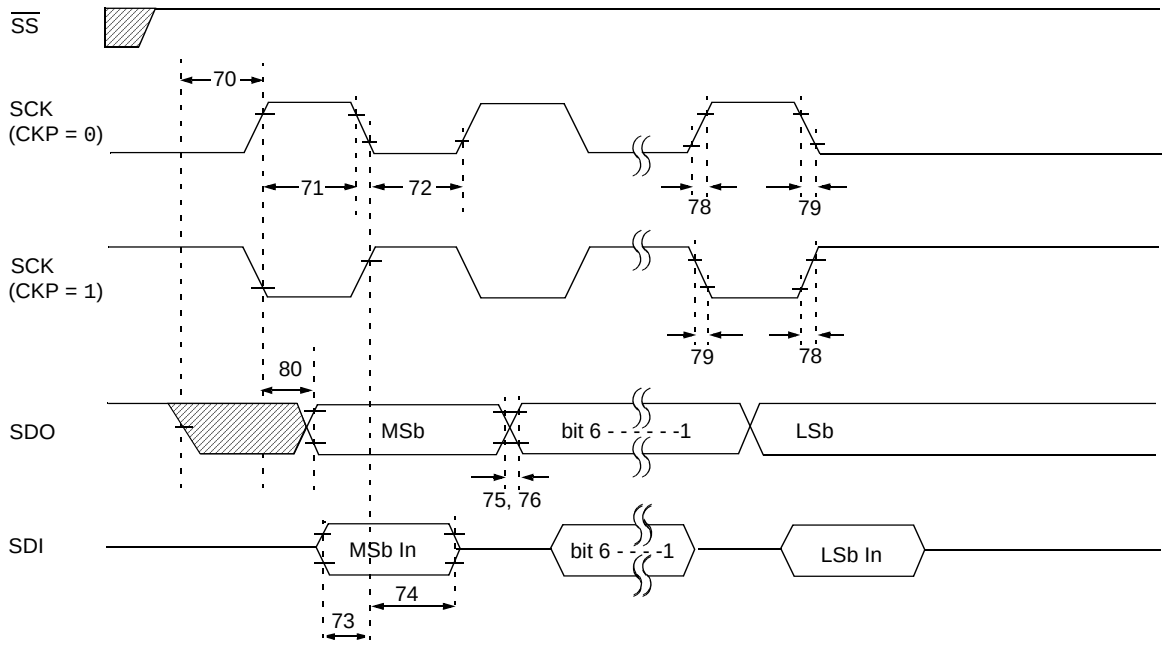

Note: Refer to Figure 27-6 for load conditions.

FIGURE 27-14: EXAMPLE SPI MASTER MODE TIMING (CKE = 1)

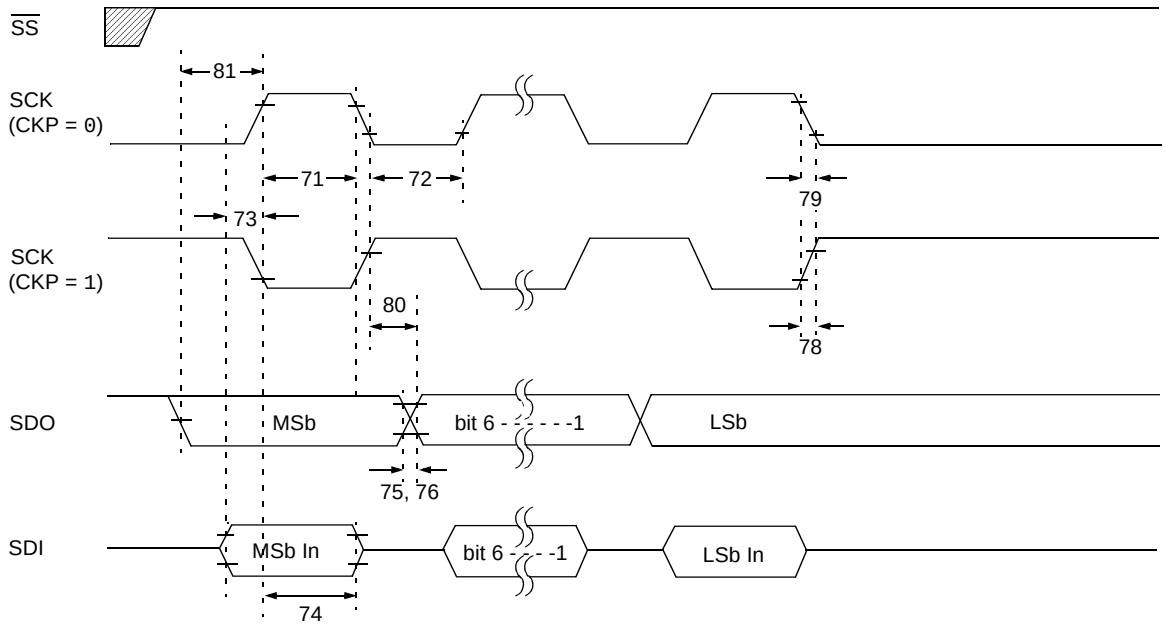

Note: Refer to Figure 27-6 for load conditions.

FIGURE 27-15: EXAMPLE SPI SLAVE MODE TIMING (CKE = 0)

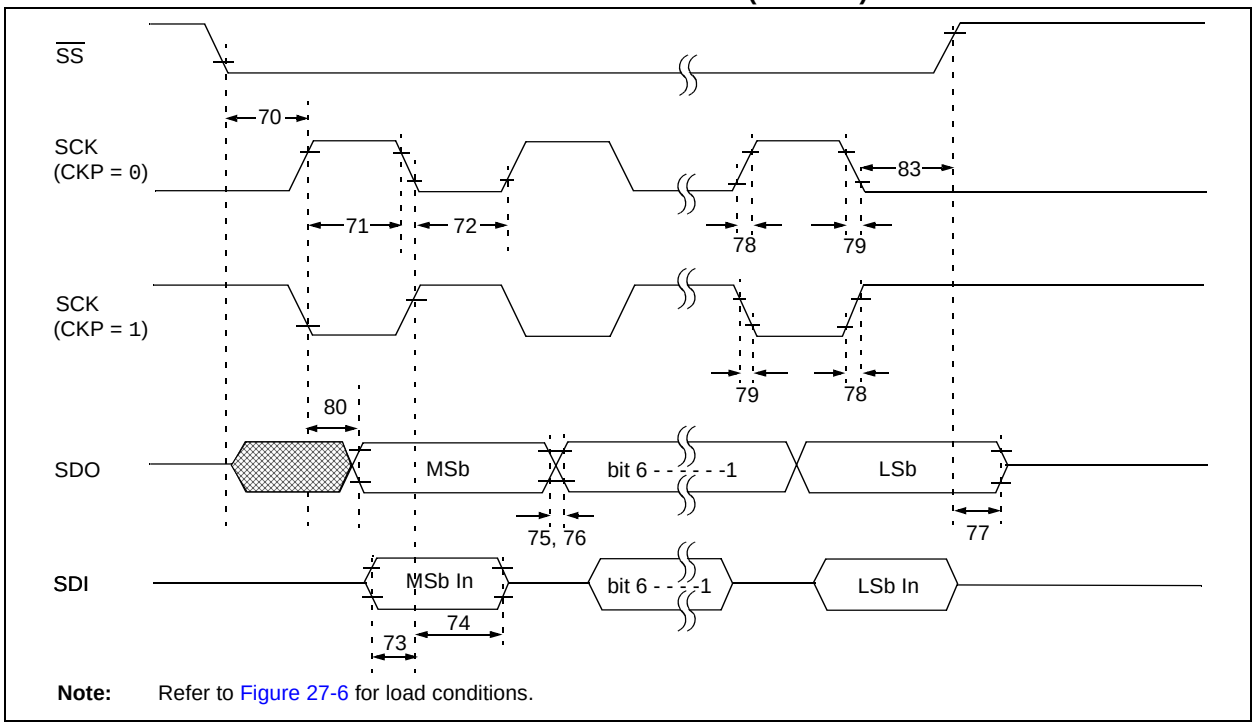

Note: Refer to Figure 27-6 for load conditions.

FIGURE 27-16: EXAMPLE SPI SLAVE MODE TIMING (CKE = 1)

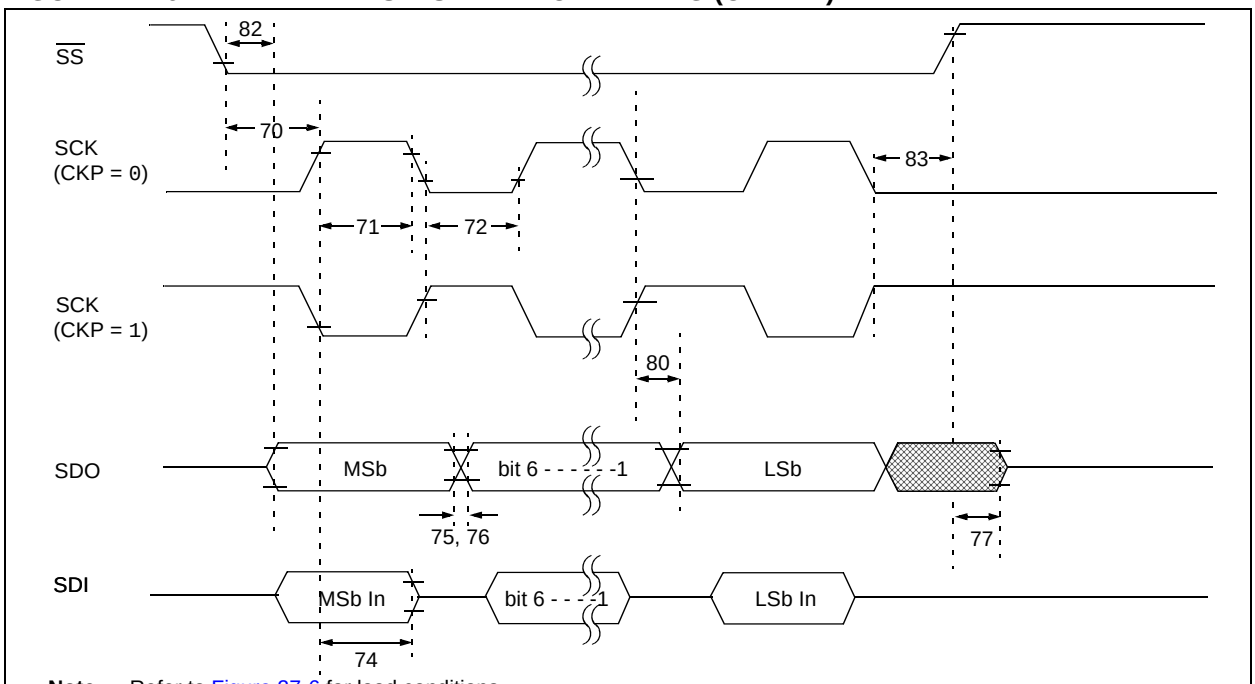

Note: Refer to Figure 27-6 for load conditions.

© 2010-2016 Microchip Technology Inc.

TABLE 27-14: SPI MODE REQUIREMENTS

Param. No.	Symbol	Characteristic	Min	Max	Units	Conditions
70	TssL2scH, TssL2scL	$\overline{SS}$ ↓ to SCK ↓ or SCK ↑ Input	TCY	—	ns	
71	TscH	SCK Input High Time Continuous	25	—	ns	
72	TscL	SCK Input Low Time Continuous	30	—	ns	
73	TdiV2scH, TdiV2scL	Setup Time of SDI Data Input to SCK Edge	25	—	ns	
74	TscH2diL, TscL2diL	Hold Time of SDI Data Input to SCK Edge	25	—	ns	
75	TdoR	SDO Data Output Rise Time	—	30	ns	
76	TdoF	SDO Data Output Fall Time	—	20	ns	
77	TssH2doZ	$\overline{SS}$↑ to SDO Output High-Impedance	10	50	ns	
78	TscR	SCK Output Rise Time (Master mode)	—	30	ns	
79	TscF	SCK Output Fall Time (Master mode)	—	20	ns	
80	TscH2doV, TscL2doV	SDO Data Output Valid after SCK Edge	—	20 60	ns ns	SPI Master Mode SPI Slave Mode
81	TdoV2scH, TdoV2scL	SDO Data Output Setup to SCK Edge	TCY	—	ns	
82	TssL2doV	SDO Data Output Valid after $\overline{SS}$ ↓ Edge	—	60	ns	
83	TscH2ssH, TscL2ssH	$\overline{SS}$ ↑ after SCK edge	1.5 TCY + 40	—	ns	

FIGURE 27-17: I²C BUS START/STOP BITS TIMING

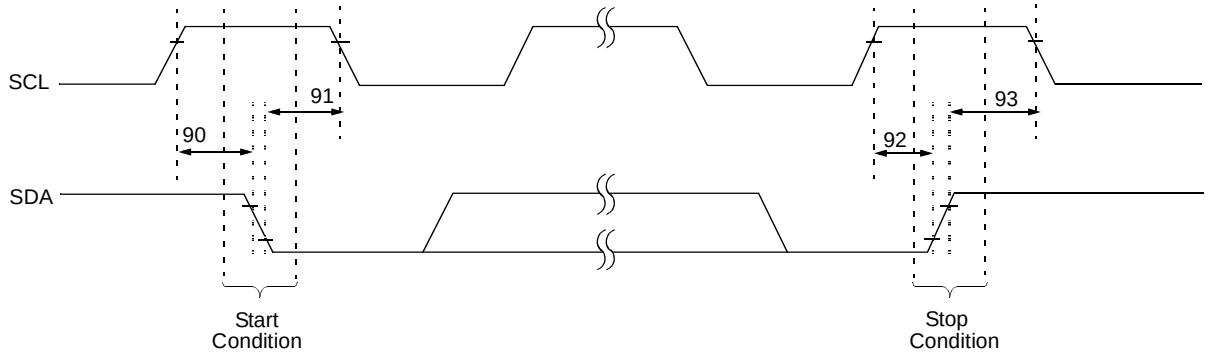

Note: Refer to Figure 27-6 for load conditions.

TABLE 27-15: I²C BUS START/STOP BITS REQUIREMENTS (SLAVE MODE)

Param. No.	Symbol	Characteristic		Min	Max	Units	Conditions
90	TSU:STA	Start Condition Setup Time	100 kHz mode	4700	—	ns	Only relevant for Repeated Start condition
			400 kHz mode	600	—		
91	THD:STA	Start Condition Hold Time	100 kHz mode	4000	—	ns	After this period, the first clock pulse is generated
			400 kHz mode	600	—		
92	TSU:STO	Stop Condition Setup Time	100 kHz mode	4700	—	ns	
			400 kHz mode	600	—		
93	THD:STO	Stop Condition Hold Time	100 kHz mode	4000	—	ns	
			400 kHz mode	600	—		

FIGURE 27-18: I²C BUS DATA TIMING

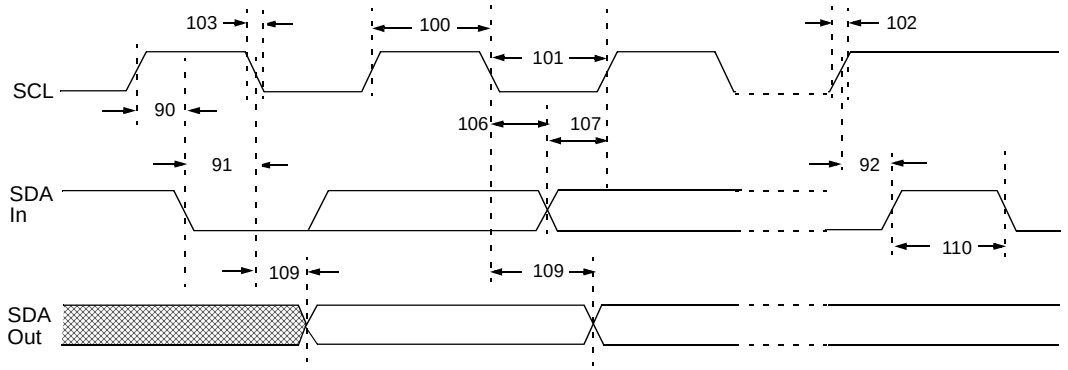

Note: Refer to Figure 27-6 for load conditions.

© 2010-2016 Microchip Technology Inc.

TABLE 27-16: I²C BUS DATA REQUIREMENTS (SLAVE MODE)

Param. No.	Symbol	Characteristic		Min	Max	Units	Conditions
100	THIGH	Clock High Time	100 kHz mode	4.0	—	μs	Must operate at a minimum of 1.5 MHz
			400 kHz mode	0.6	—	μs	Must operate at a minimum of 10 MHz
			SSP Module	1.5 TCY	—		
101	TLOW	Clock Low Time	100 kHz mode	4.7	—	μs	Must operate at a minimum of 1.5 MHz
			400 kHz mode	1.3	—	μs	Must operate at a minimum of 10 MHz
			SSP Module	1.5 TCY	—		
102	TR	SDA and SCL Rise Time	100 kHz mode	—	1000	ns	
			400 kHz mode	20 + 0.1 CB	300	ns	CB is specified to be from 10 to 400 pF
103	TF	SDA and SCL Fall Time	100 kHz mode	—	300	ns	
			400 kHz mode	20 + 0.1 CB	300	ns	CB is specified to be from 10 to 400 pF
90	TSU:STA	Start Condition Setup Time	100 kHz mode	4.7	—	μs	Only relevant for Repeated Start condition
			400 kHz mode	0.6	—	μs	
91	THD:STA	Start Condition Hold Time	100 kHz mode	4.0	—	μs	After this period, the first clock pulse is generated
			400 kHz mode	0.6	—	μs	
106	THD:DAT	Data Input Hold Time	100 kHz mode	0	—	ns	
			400 kHz mode	0	0.9	μs	
107	TSU:DAT	Data Input Setup Time	100 kHz mode	250	—	ns	**(Note 2)**
			400 kHz mode	100	—	ns	
92	TSU:STO	Stop Condition Setup Time	100 kHz mode	4.7	—	μs	
			400 kHz mode	0.6	—	μs	
109	TAA	Output Valid from Clock	100 kHz mode	—	3500	ns	**(Note 1)**
			400 kHz mode	—	—	ns	
110	TBUF	Bus Free Time	100 kHz mode	4.7	—	μs	Time the bus must be free before a new transmission can start
			400 kHz mode	1.3	—	μs	
D102	CB	Bus Capacitive Loading		—	400	pF	

Note 1: As a transmitter, the device must provide this internal minimum delay time to bridge the undefined region (min. 300 ns) of the falling edge of SCL to avoid unintended generation of Start or Stop conditions.

2: A fast mode I²C bus device can be used in a standard mode I²C bus system but the requirement, TSU:DAT ≥ 250 ns, must then be met. This will automatically be the case if the device does not stretch the LOW period of the SCL signal. If such a device does stretch the LOW period of the SCL signal, it must output the next data bit to the SDA line, TR max. + TSU:DAT = 1000 + 250 = 1250 ns (according to the standard mode I²C bus specification), before the SCL line is released.

FIGURE 27-19: MASTER SSP I²C BUS START/STOP BITS TIMING WAVEFORMS

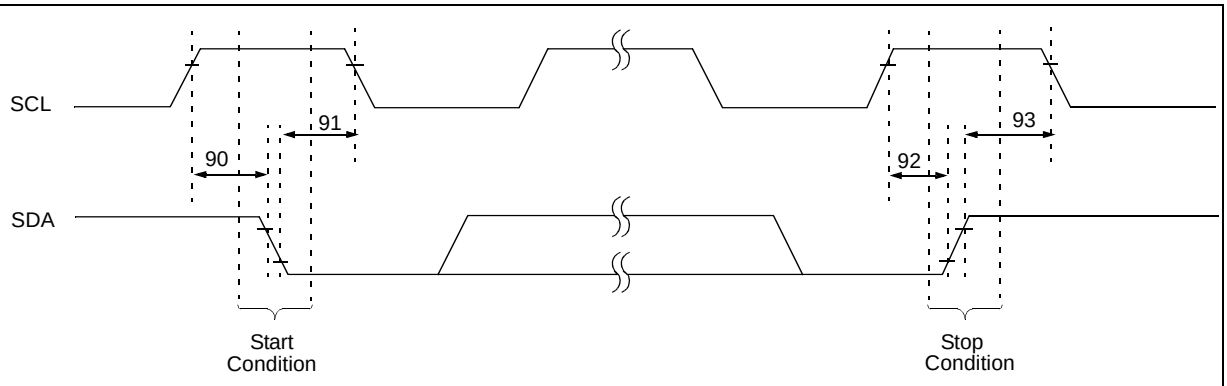

Note: Refer to Figure 27-6 for load conditions.

TABLE 27-17: MASTER SSP I²C BUS START/STOP BITS REQUIREMENTS

Param. No.	Symbol	Characteristic		Min	Max	Units	Conditions
90	TSU:STA	Start Condition Setup Time	100 kHz mode	2(Tosc)(BRG + 1)	—	ns	Only relevant for Repeated Start condition
			400 kHz mode	2(Tosc)(BRG + 1)	—		
			1 MHz mode(1)	2(Tosc)(BRG + 1)	—		
91	THD:STA	Start Condition Hold Time	100 kHz mode	2(Tosc)(BRG + 1)	—	ns	After this period, the first clock pulse is generated
			400 kHz mode	2(Tosc)(BRG + 1)	—		
			1 MHz mode(1)	2(Tosc)(BRG + 1)	—		
92	TSU:STO	Stop Condition Setup Time	100 kHz mode	2(Tosc)(BRG + 1)	—	ns	
			400 kHz mode	2(Tosc)(BRG + 1)	—		
			1 MHz mode(1)	2(Tosc)(BRG + 1)	—		
93	THD:STO	Stop Condition Hold Time	100 kHz mode	2(Tosc)(BRG + 1)	—	ns	
			400 kHz mode	2(Tosc)(BRG + 1)	—		
			1 MHz mode(1)	2(Tosc)(BRG + 1)	—		

Note 1: Maximum pin capacitance = 10 pF for all I²C pins.

FIGURE 27-20: MASTER SSP I²C BUS DATA TIMING

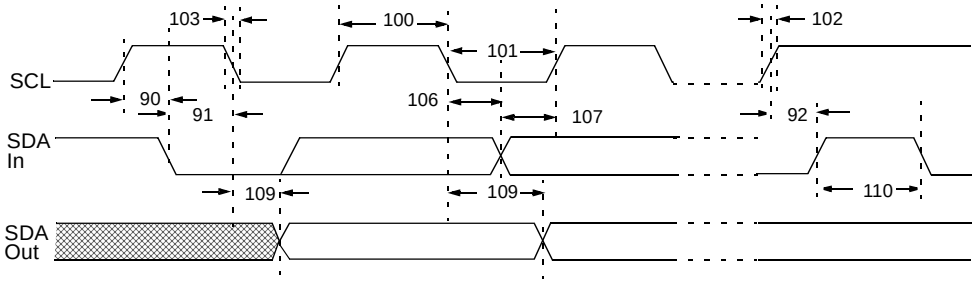

Note: Refer to Figure 27-6 for load conditions.

© 2010-2016 Microchip Technology Inc.

TABLE 27-18: MASTER SSP I²C BUS DATA REQUIREMENTS

Param. No.	Symbol	Characteristic		Min	Max	Units	Conditions
100	THIGH	Clock High Time	100 kHz mode	2(TOSC)(BRG + 1)	—	ms	
			400 kHz mode	2(TOSC)(BRG + 1)	—	ms	
			1 MHz mode(1)	2(TOSC)(BRG + 1)	—	ms	
101	TLOW	Clock Low Time	100 kHz mode	2(TOSC)(BRG + 1)	—	ms	
			400 kHz mode	2(TOSC)(BRG + 1)	—	ms	
			1 MHz mode(1)	2(TOSC)(BRG + 1)	—	ms	
102	TR	SDA and SCL Rise Time	100 kHz mode	—	1000	ns	CB is specified to be from 10 to 400 pF
			400 kHz mode	20 + 0.1 CB	300	ns	
			1 MHz mode(1)	—	300	ns	
103	TF	SDA and SCL Fall Time	100 kHz mode	—	300	ns	CB is specified to be from 10 to 400 pF
			400 kHz mode	20 + 0.1 CB	300	ns	
			1 MHz mode(1)	—	100	ns	
90	TSU:STA	Start Condition Setup Time	100 kHz mode	2(TOSC)(BRG + 1)	—	ms	Only relevant for Repeated Start condition
			400 kHz mode	2(TOSC)(BRG + 1)	—	ms	
			1 MHz mode(1)	2(TOSC)(BRG + 1)	—	ms	
91	THD:STA	Start Condition Hold Time	100 kHz mode	2(TOSC)(BRG + 1)	—	ms	After this period, the first clock pulse is generated
			400 kHz mode	2(TOSC)(BRG + 1)	—	ms	
			1 MHz mode(1)	2(TOSC)(BRG + 1)	—	ms	
106	THD:DAT	Data Input Hold Time	100 kHz mode	0	—	ns	
			400 kHz mode	0	0.9	ms	
107	TSU:DAT	Data Input Setup Time	100 kHz mode	250	—	ns	**(Note 2)**
			400 kHz mode	100	—	ns	
92	TSU:STO	Stop Condition Setup Time	100 kHz mode	2(TOSC)(BRG + 1)	—	ms	
			400 kHz mode	2(TOSC)(BRG + 1)	—	ms	
			1 MHz mode(1)	2(TOSC)(BRG + 1)	—	ms	
109	TAA	Output Valid from Clock	100 kHz mode	—	3500	ns	
			400 kHz mode	—	1000	ns	
			1 MHz mode(1)	—	—	ns	
110	TBUF	Bus Free Time	100 kHz mode	4.7	—	ms	Time the bus must be free before a new transmission can start
			400 kHz mode	1.3	—	ms	
D102	CB	Bus Capacitive Loading		—	400	pF	

Note 1: Maximum pin capacitance = 10 pF for all I²C pins.

2: A fast mode I²C bus device can be used in a standard mode I²C bus system, but parameter 107 ≥ 250 ns must then be met. This will automatically be the case if the device does not stretch the Low period of the SCL signal. If such a device does stretch the Low period of the SCL signal, it must output the next data bit to the SDA line, parameter 102 + parameter 107 = 1000 + 250 = 1250 ns (for 100 kHz mode), before the SCL line is released.

FIGURE 27-21: EUSART SYNCHRONOUS TRANSMISSION (MASTER/SLAVE) TIMING

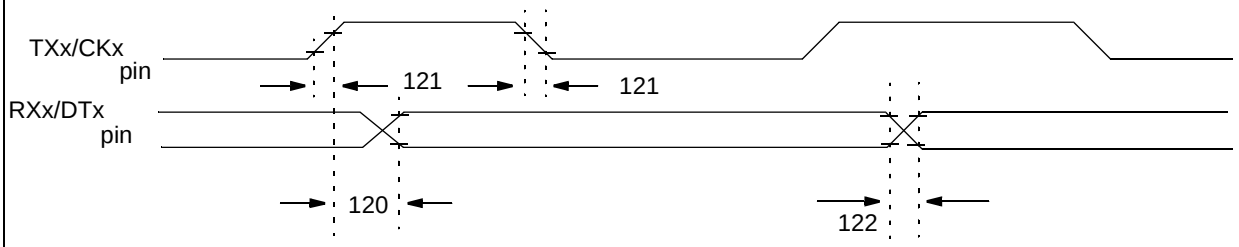

Note: Refer to Figure 27-6 for load conditions.

TABLE 27-19: EUSART SYNCHRONOUS TRANSMISSION REQUIREMENTS

Param. No.	Symbol	Characteristic	Min	Max	Units	Conditions
120	TckH2dtV	SYNC XMIT (MASTER & SLAVE) Clock High to Data Out Valid	—	40	ns	
121	Tckrf	Clock Out Rise Time and Fall Time (Master mode)	—	20	ns	
122	Tdtrf	Data Out Rise Time and Fall Time	—	20	ns	

FIGURE 27-22: EUSART SYNCHRONOUS RECEIVE (MASTER/SLAVE) TIMING

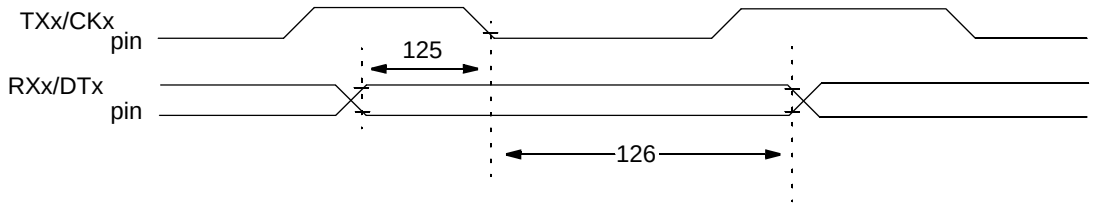

Note: Refer to Figure 27-6 for load conditions.

TABLE 27-20: EUSART SYNCHRONOUS RECEIVE REQUIREMENTS

Param. No.	Symbol	Characteristic	Min	Max	Units	Conditions
125	TdtV2ckl	SYNC RCV (MASTER & SLAVE) Data Setup before CK ↓ (DT setup time)	10	—	ns	
126	TckL2dtl	Data Hold after CK ↓ (DT hold time)	15	—	ns	

© 2010-2016 Microchip Technology Inc.

TABLE 27-21: A/D CONVERTER CHARACTERISTICS:PIC18(L)F2X/4XK22

PIC18(L)F2X/4XK22			Standard Operating Conditions (unless otherwise stated) Operating temperature Tested at +25°C				
Param. No.	**Symbol**	**Characteristic**	**Min**	**Typ**	**Max**	**Units**	**Conditions**
A01	N_R	Resolution	—	—	10	bits	ΔV_{REF} = 3.0V
A03	E_{IL}	Integral Linearity Error	—	±0.5	±1	LSb	ΔV_{REF} = 3.0V
A04	E_{DL}	Differential Linearity Error	—	±0.5	±1	LSb	ΔV_{REF} = 3.0V
A06	E_{OFF}	Offset Error	—	±0.7	±2	LSb	ΔV_{REF} = 3.0V
A07	E_{GN}	Gain Error	—	±0.7	±2	LSb	ΔV_{REF} = 3.0V
A08	E_{TOTL}	Total Error	—	±0.8	±3	LSb	ΔV_{REF} = 3.0V
A20	ΔV_{REF}	Reference Voltage Range (V_{REFH} – V_{REFL})	2	—	V_{DD}	V	
A21	V_{REFH}	Reference Voltage High	V_{DD}/2	—	V_{DD} + 0.3	V	
A22	V_{REFL}	Reference Voltage Low	V_{SS} – 0.3V	—	V_{DD}/2	V	
A25	V_{AIN}	Analog Input Voltage	V_{REFL}	—	V_{REFH}	V	
A30	Z_{AIN}	Recommended Impedance of Analog Voltage Source	—	—	3	kΩ	

Note: The A/D conversion result never decreases with an increase in the input voltage and has no missing codes.

FIGURE 27-23: A/D CONVERSION TIMING

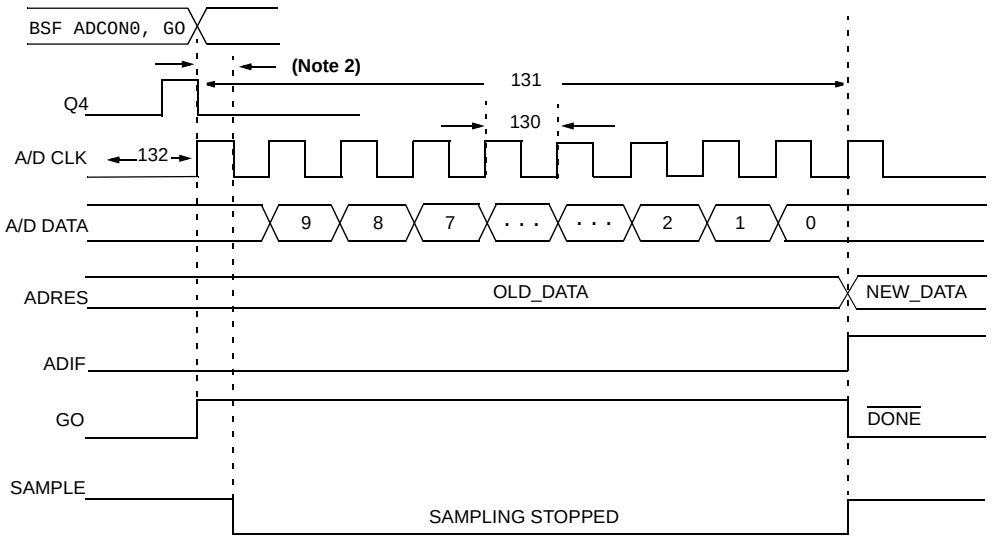

Note 1: If the A/D clock source is selected as RC, a time of T_{CY} is added before the A/D clock starts. This allows the SLEEP instruction to be executed.

2: This is a minimal RC delay (0.5T_{AD}), which also disconnects the holding capacitor from the analog input.

TABLE 27-22: A/D CONVERSION REQUIREMENTS PIC18(L)F2X/4XK22

Standard Operating Conditions (unless otherwise stated) Operating temperature Tested at +25°C							
Param. No.	**Symbol**	**Characteristic**	**Min**	**Typ**	**Max**	**Units**	**Conditions**
130	TAD	A/D Clock Period	1	—	25	μs	-40°C to +85°C
			1	—	4	μs	+85°C to +125°C
131	TCNV	Conversion Time (not including acquisition time) **(Note 1)**	11	—	11	TAD	
132	TACQ	Acquisition Time **(Note 2)**	1.4	—	—	μs	VDD = 3V, Rs = 50Ω
135	TSWC	Switching Time from Convert → Sample	—	—	**(Note 3)**		
136	TDIS	Discharge Time	1	—	1	TCY	

Note 1: ADRES register may be read on the following TCY cycle.

2: The time for the holding capacitor to acquire the “New” input voltage when the voltage changes full scale after the conversion (VDD to VSS or VSS to VDD). The source impedance (*RS*) on the input channels is 50 Ω.

3: On the following cycle of the device clock.

© 2010-2016 Microchip Technology Inc.

28.0 DC AND AC CHARACTERISTICS GRAPHS AND CHARTS

Note: The graphs and tables provided following this note are a statistical summary based on a limited number of samples and are provided for informational purposes only. The performance characteristics listed herein are not tested or guaranteed. In some graphs or tables, the data presented may be outside the specified operating range (e.g. outside specified power supply range) and therefore, outside the warranted range.

FIGURE 28-1: PIC18LF2X/4XK22 BASE IPD

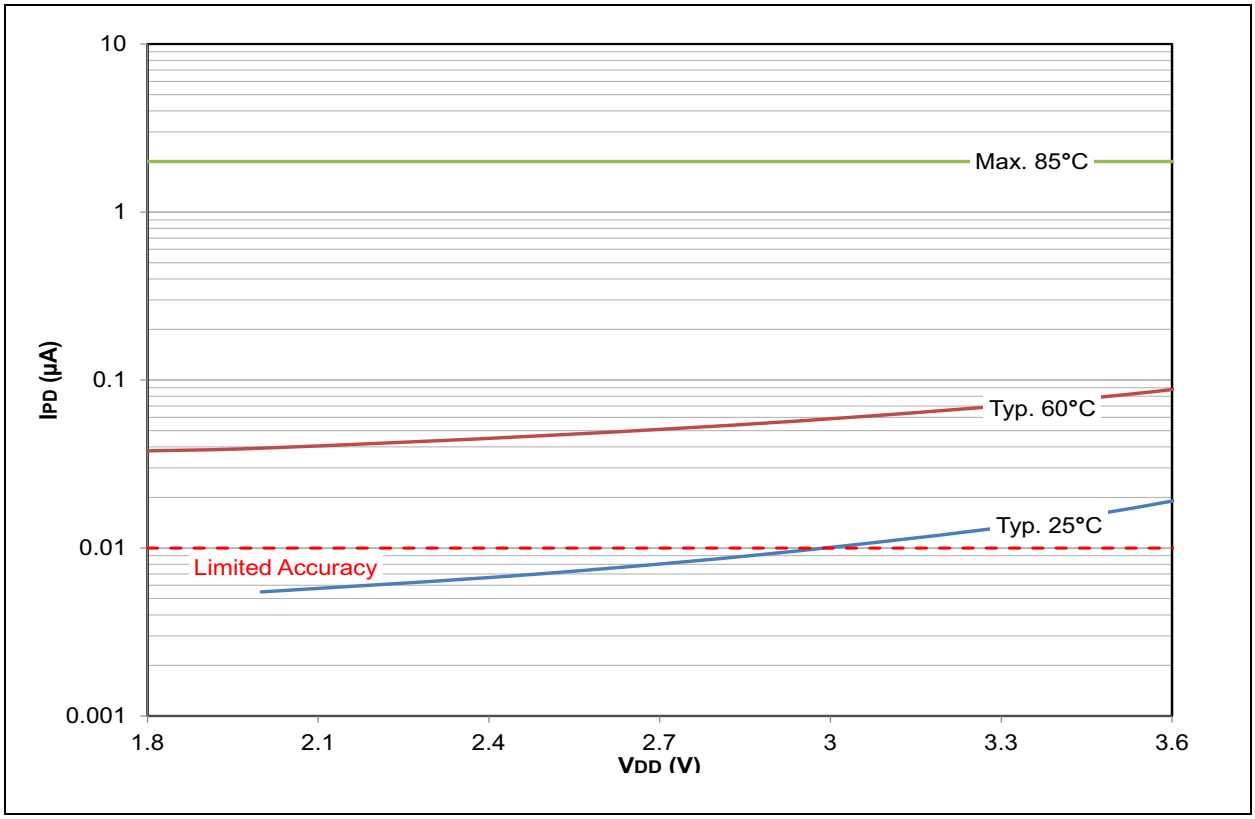

FIGURE 28-2: PIC18F2X/4XK22 BASE IPD

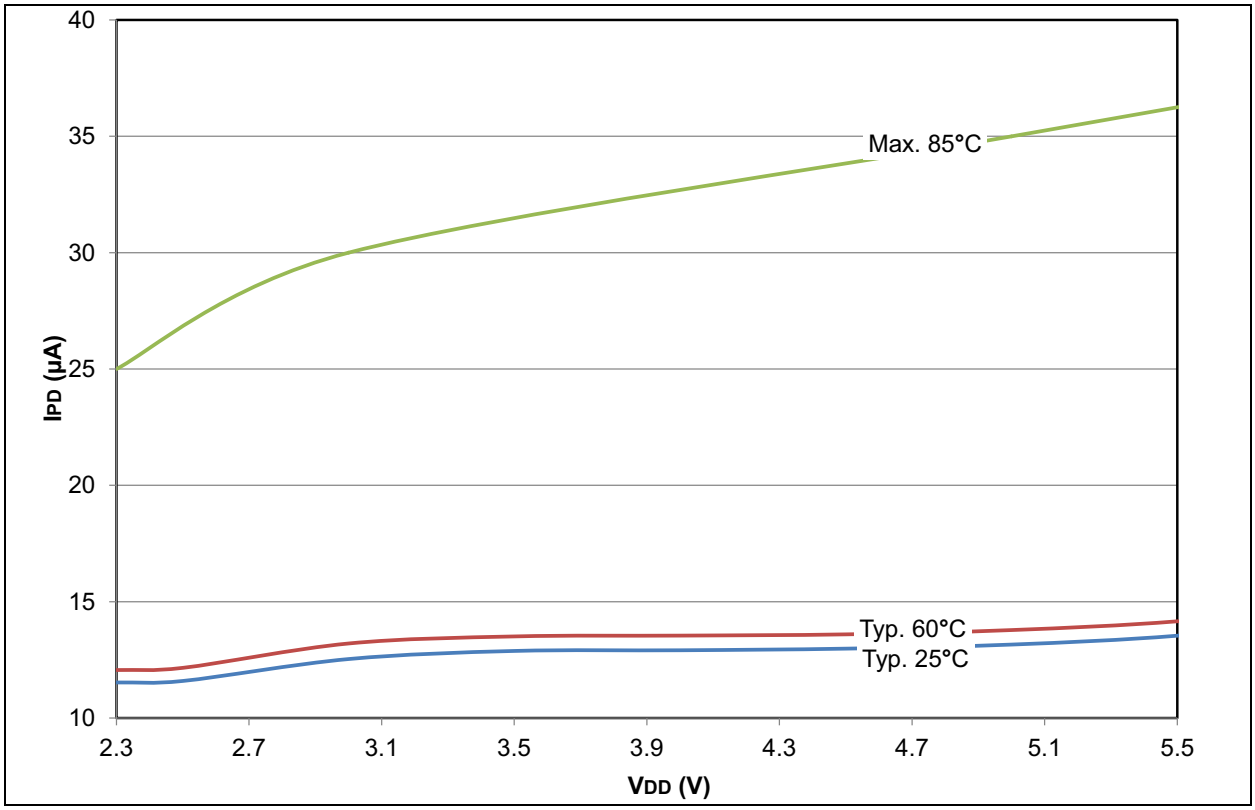

© 2010-2016 Microchip Technology Inc.

FIGURE 28-3: PIC18LF2X/4XK22 DELTA IPD WATCHDOG TIMER (WDT)

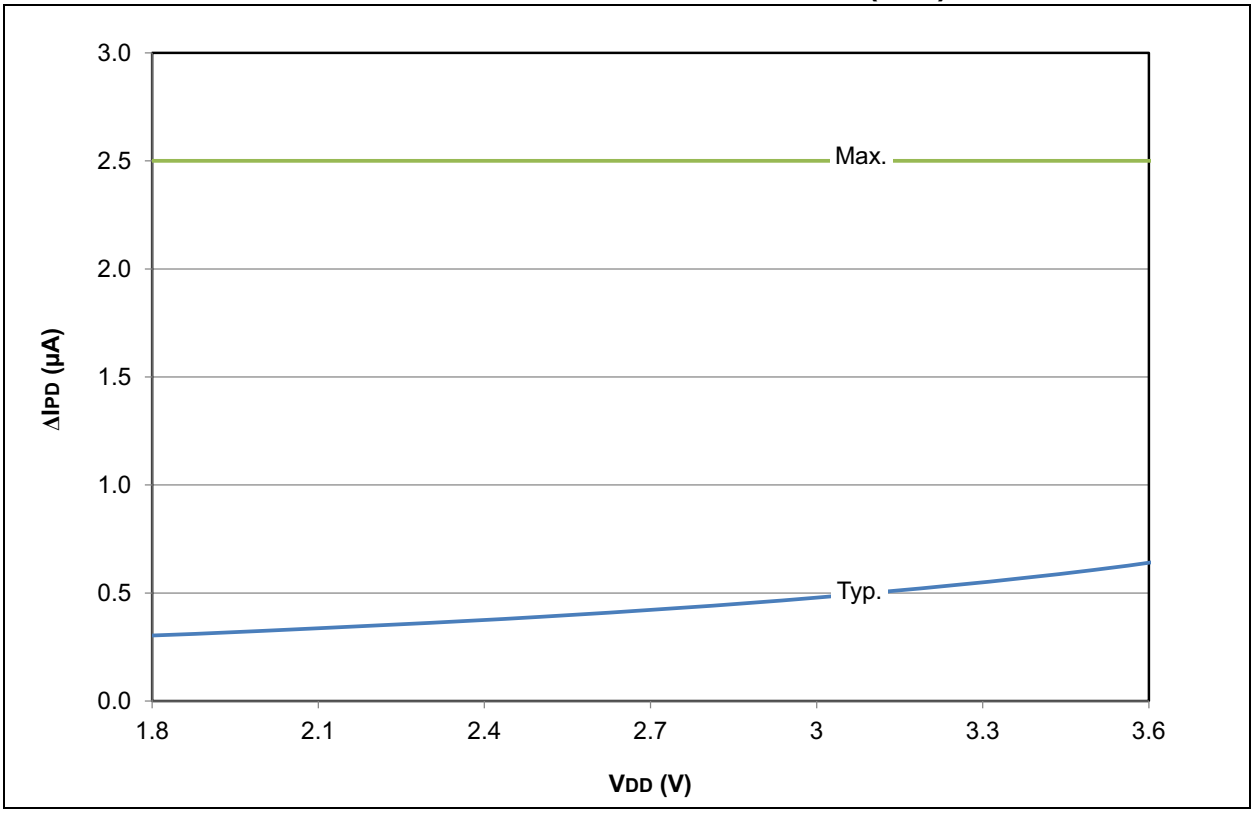

FIGURE 28-4: PIC18F2X/4XK22 DELTA IPD WATCHDOG TIMER (WDT)

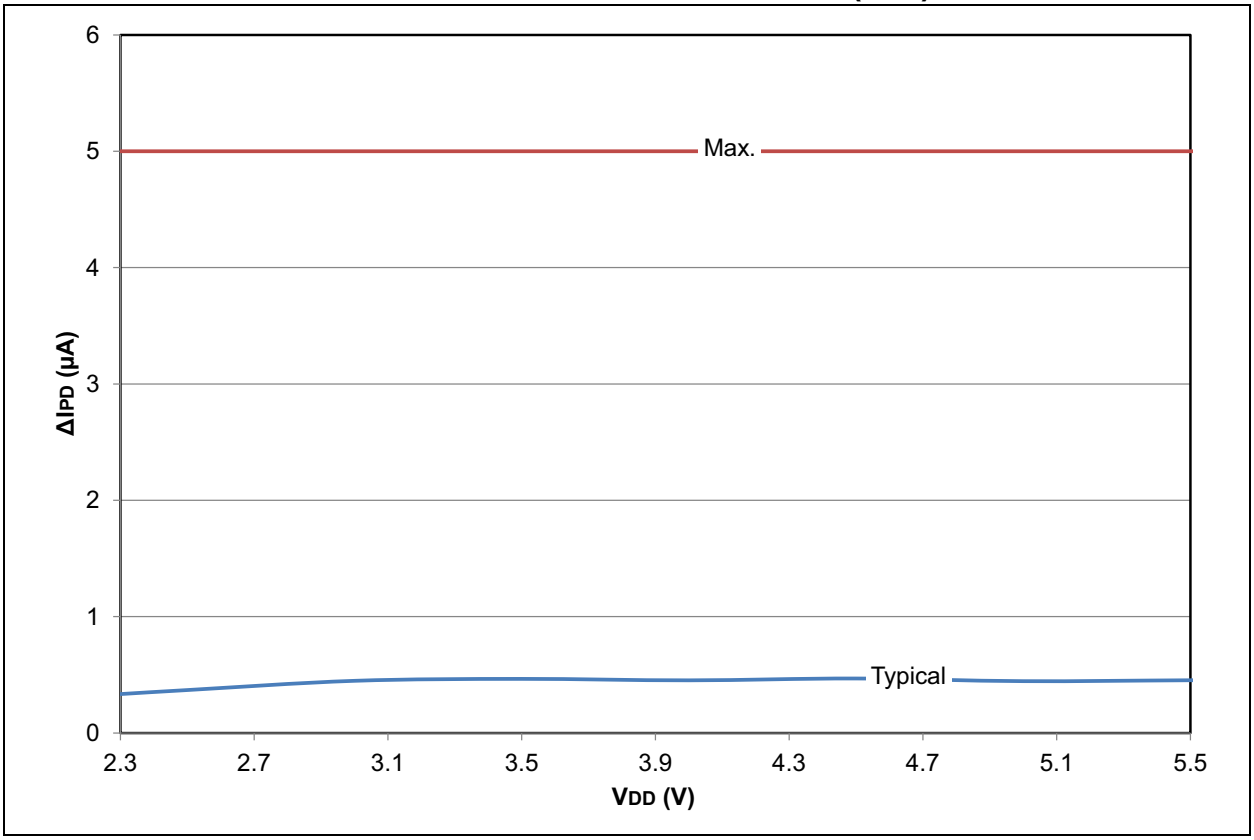

FIGURE 28-5: PIC18LF2X/4XK22 DELTA IPD BROWN-OUT RESET (BOR)

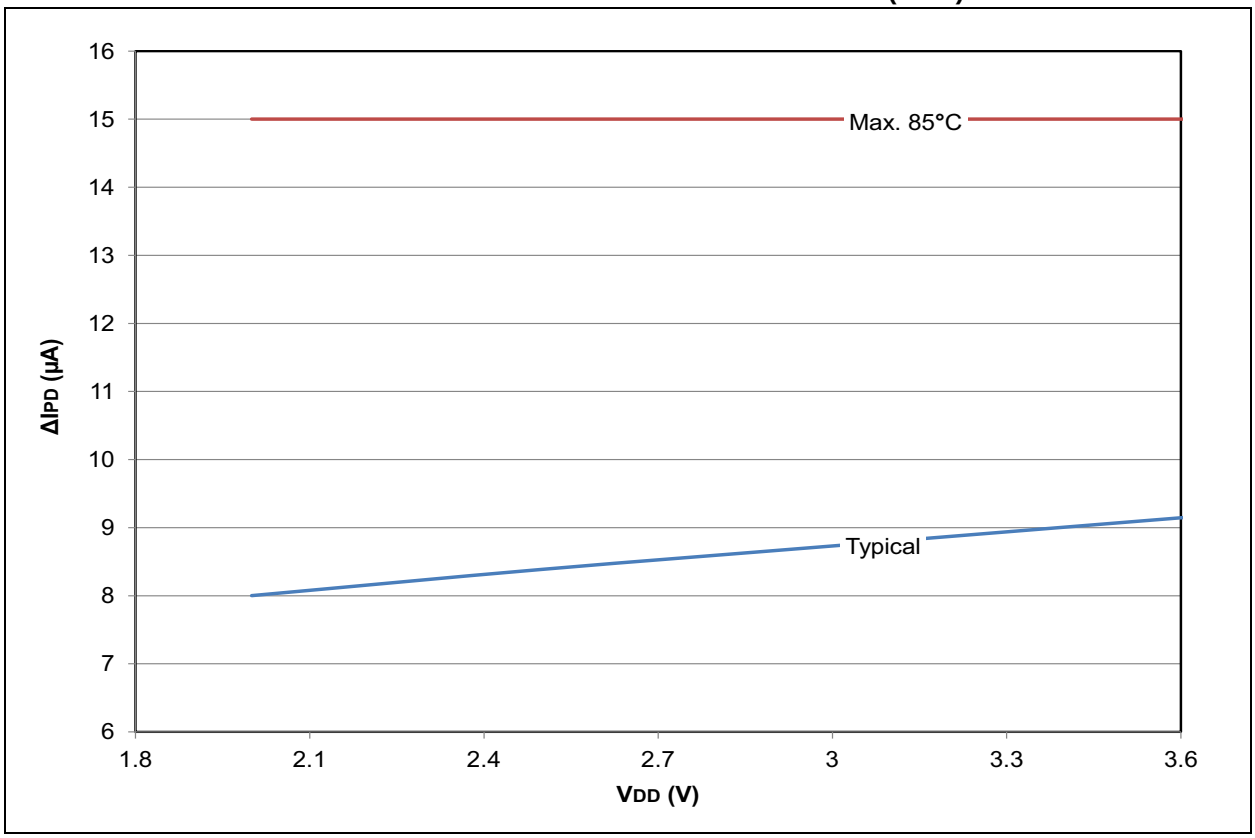

FIGURE 28-6: PIC18F2X/4XK22 DELTA IPD BROWN-OUT RESET (BOR)

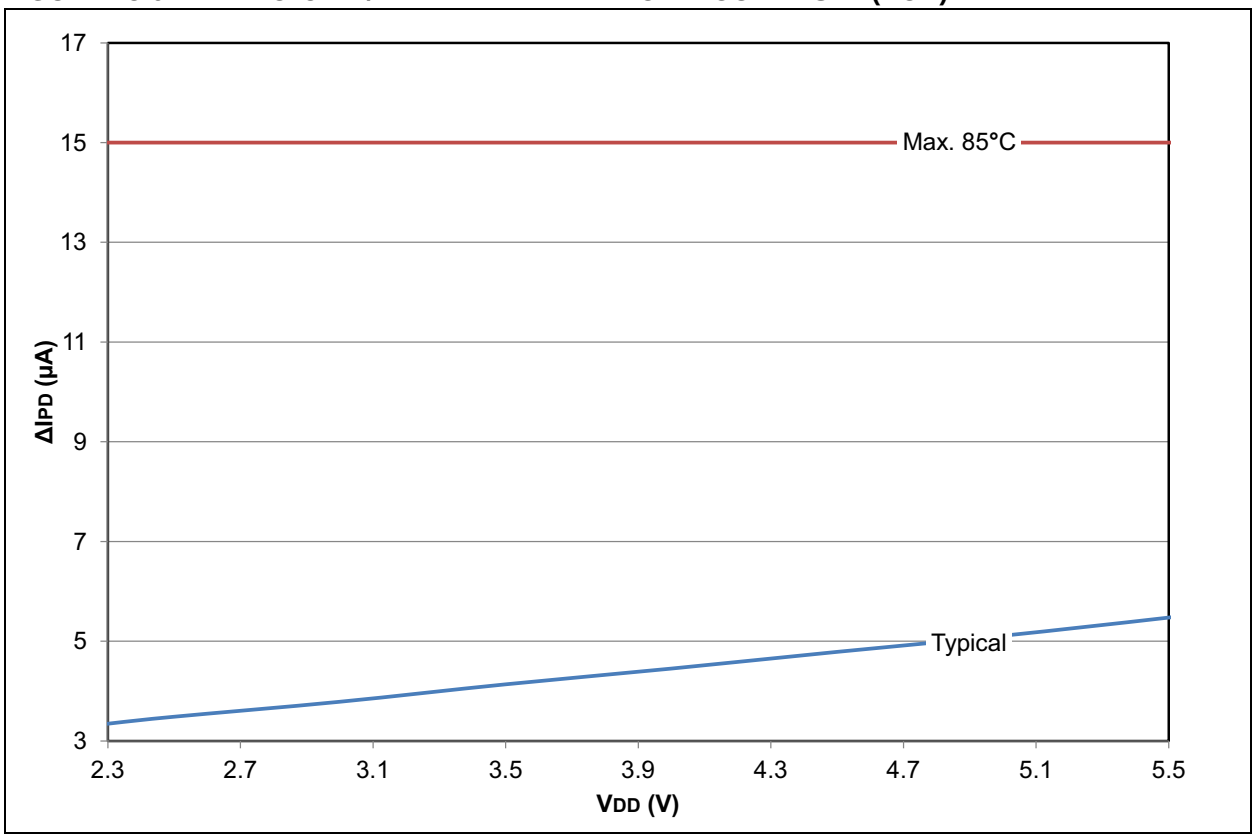

© 2010-2016 Microchip Technology Inc.

FIGURE 28-7: PIC18LF2X/4XK22 DELTA IPD HIGH/LOW-VOLTAGE DETECT (HLVD)

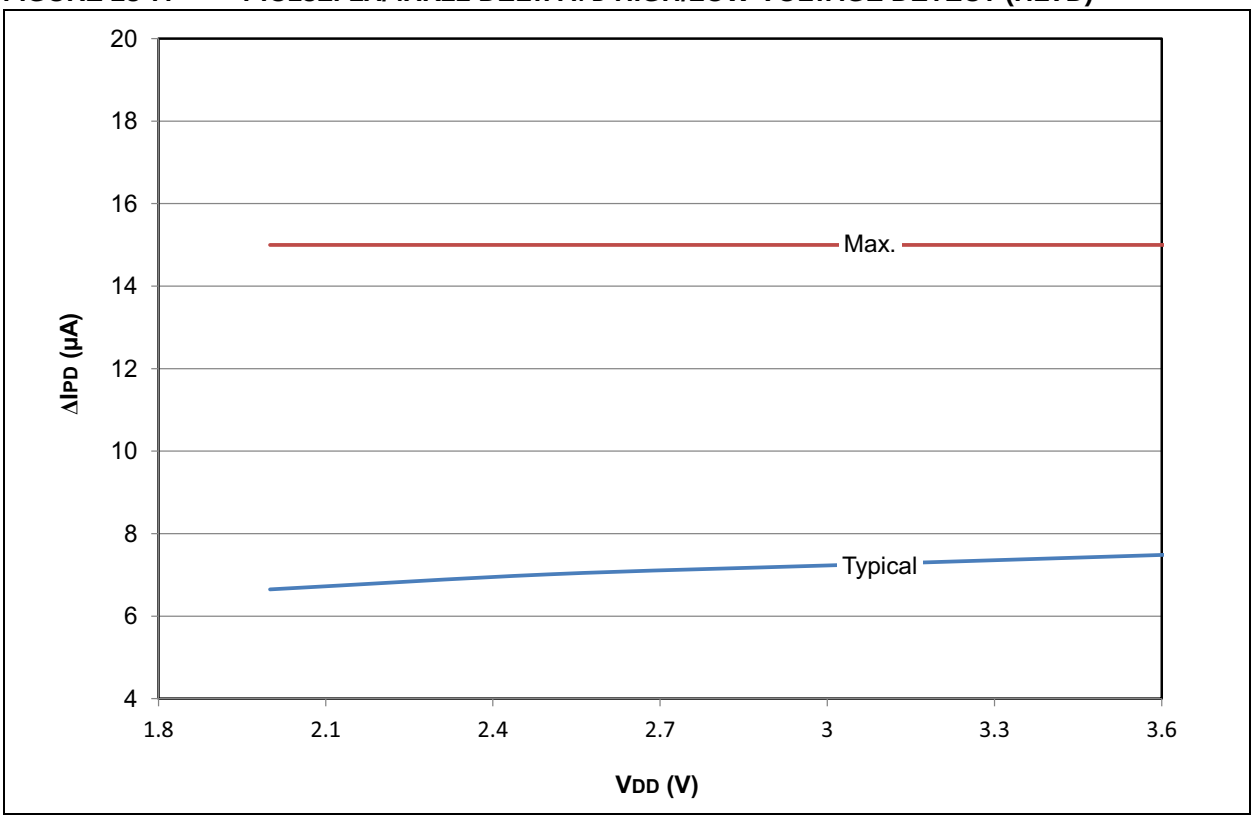

FIGURE 28-8: PIC18F2X/4XK22 DELTA IPD HIGH/LOW-VOLTAGE DETECT (HLVD)

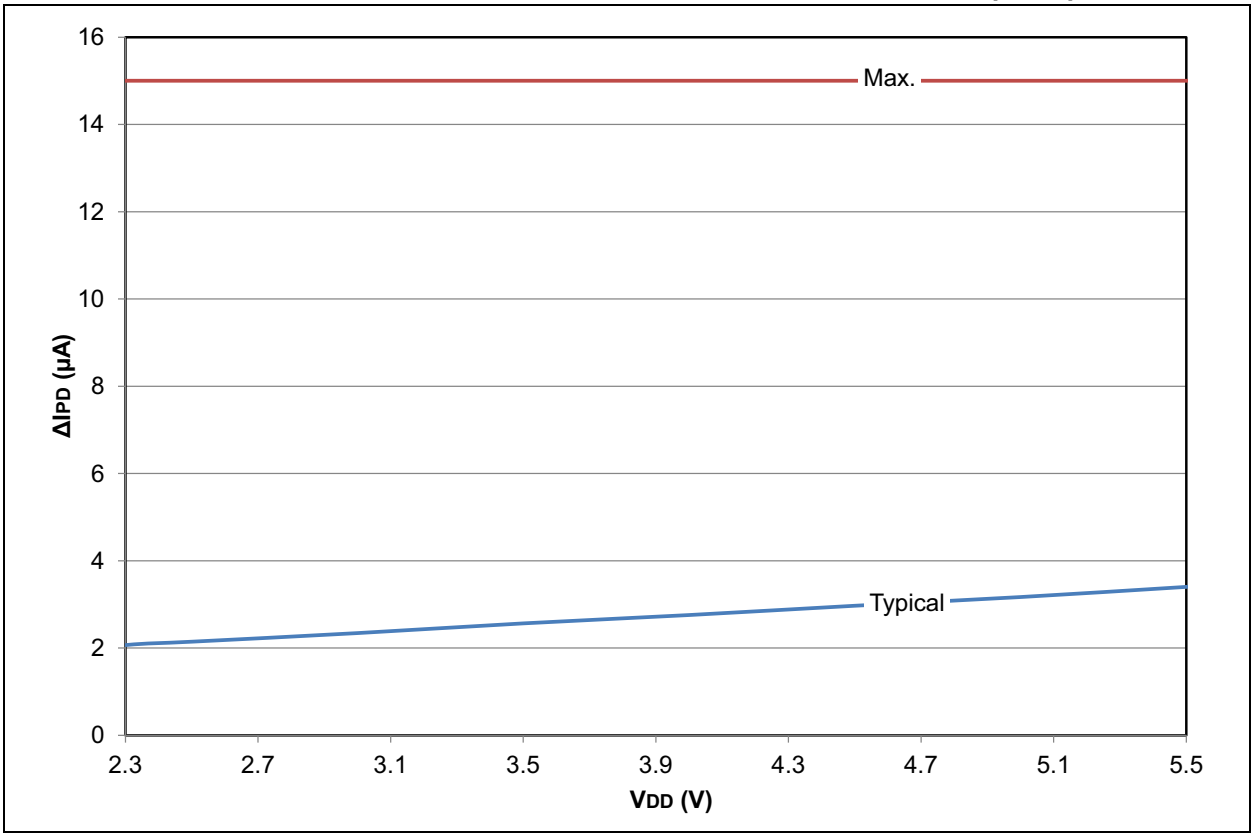

FIGURE 28-9: PIC18LF2X/4XK22 DELTA IPD SECONDARY OSCILLATOR

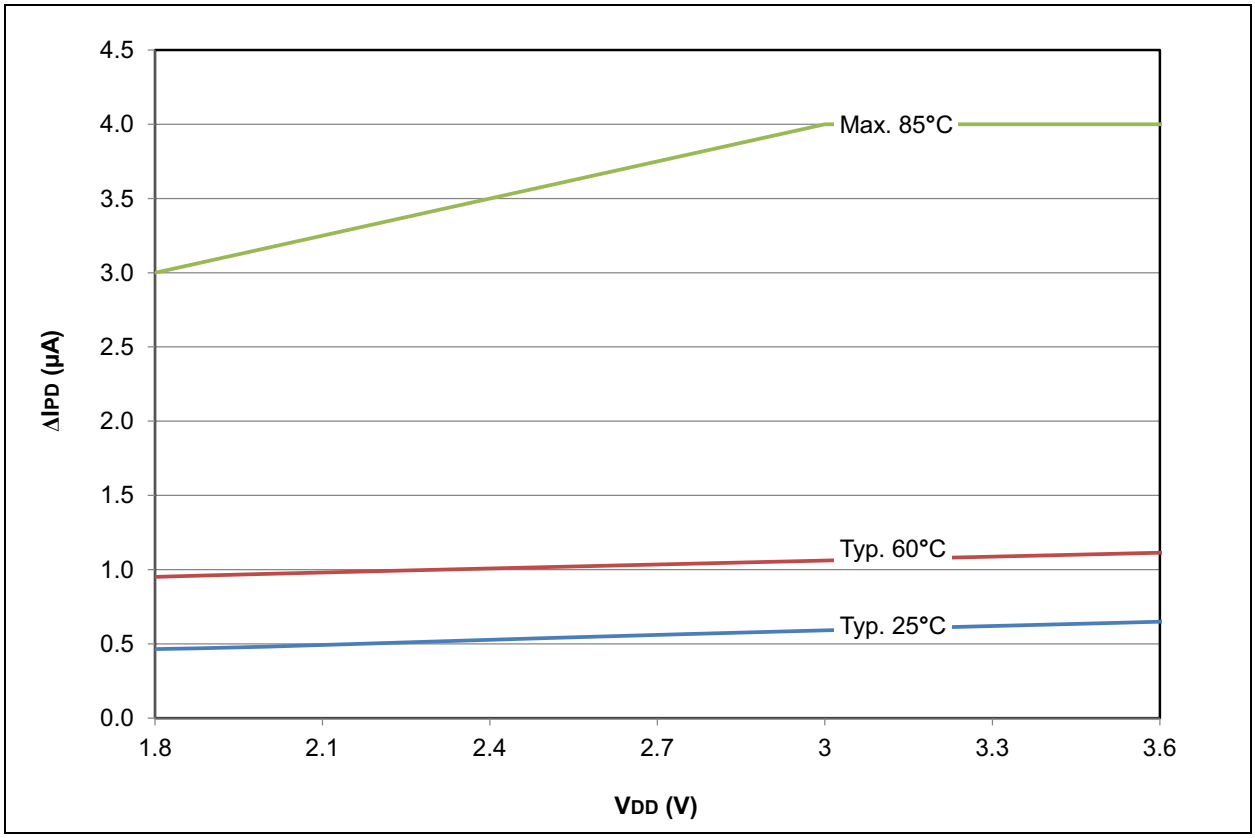

FIGURE 28-10: PIC18F2X/4XK22 DELTA IPD SECONDARY OSCILLATOR

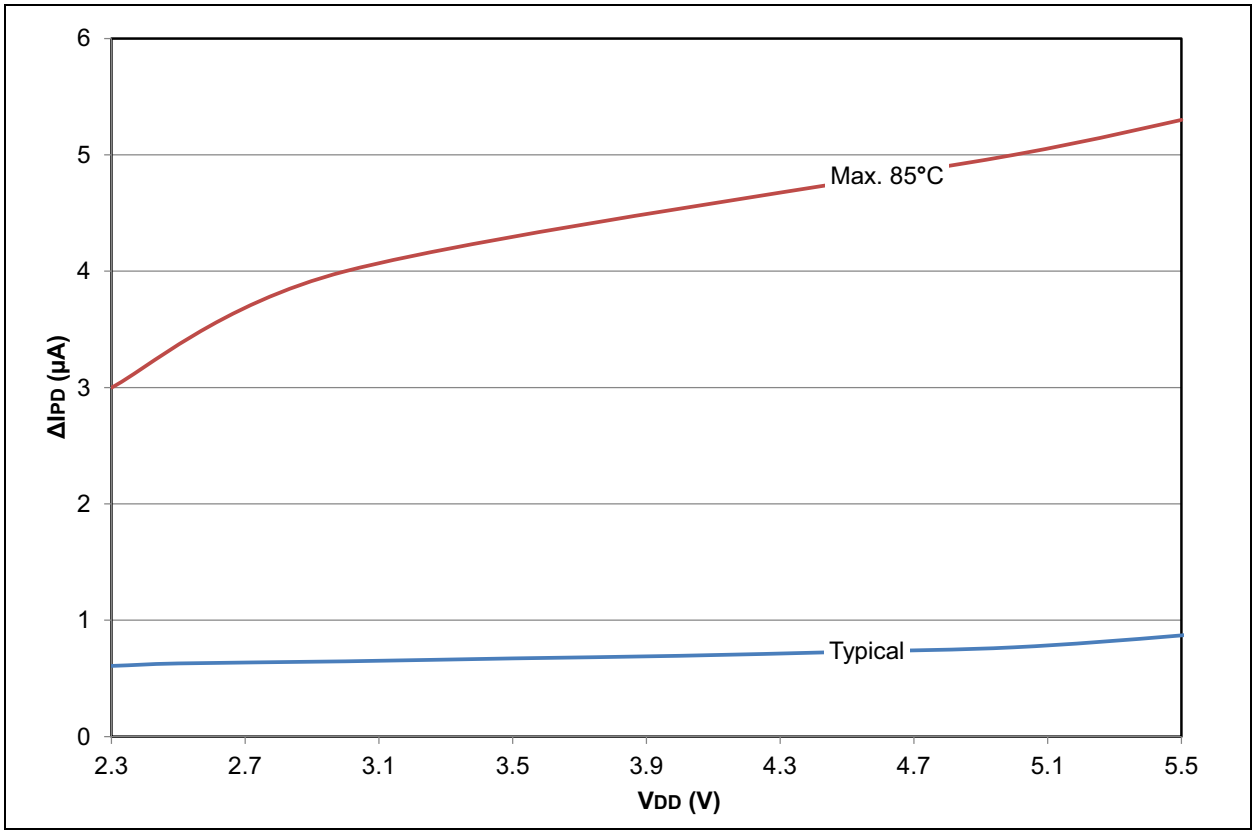

© 2010-2016 Microchip Technology Inc.

FIGURE 28-11: PIC18LF2X/4XK22 DELTA IPD COMPARATOR LOW-POWER MODE

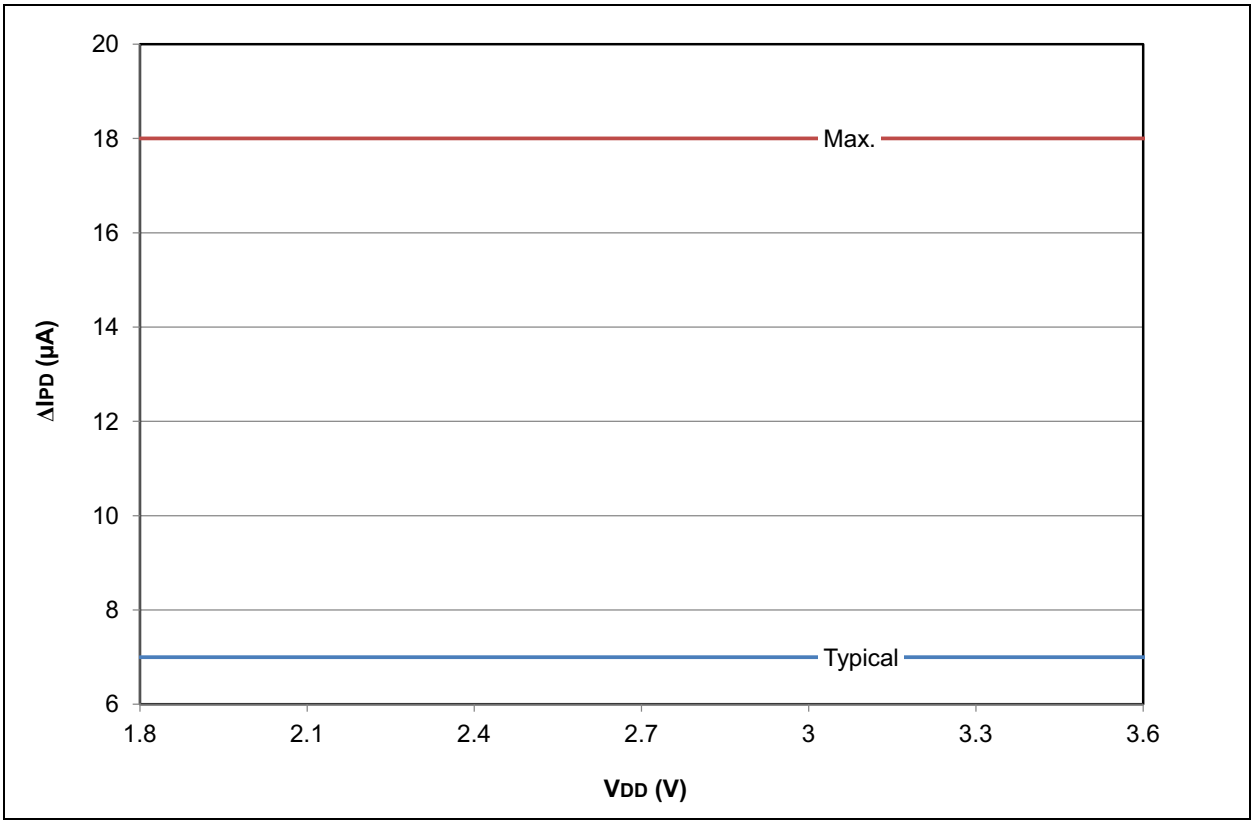

FIGURE 28-12: PIC18F2X/4XK22 DELTA IPD COMPARATOR LOW-POWER MODE

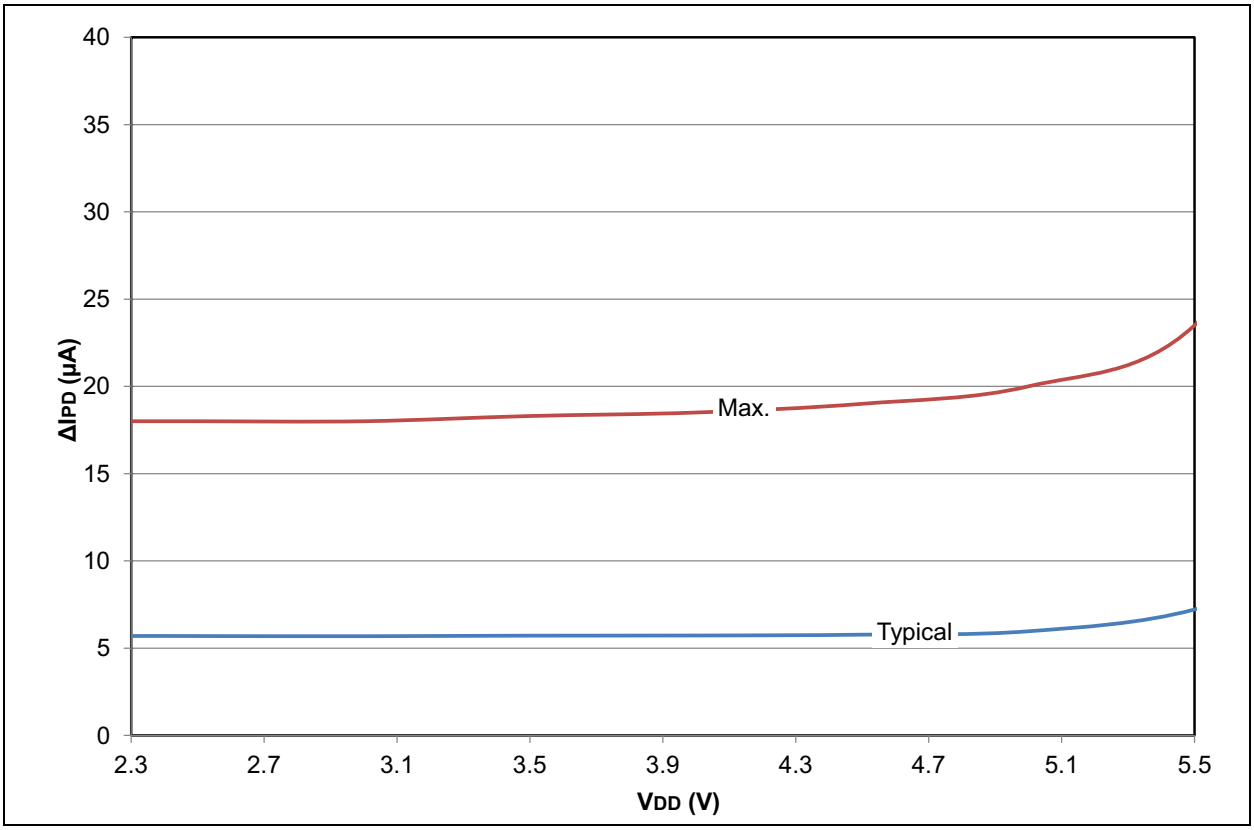

FIGURE 28-13: PIC18LF2X/4XK22 DELTA IPD COMPARATOR HIGH-POWER MODE

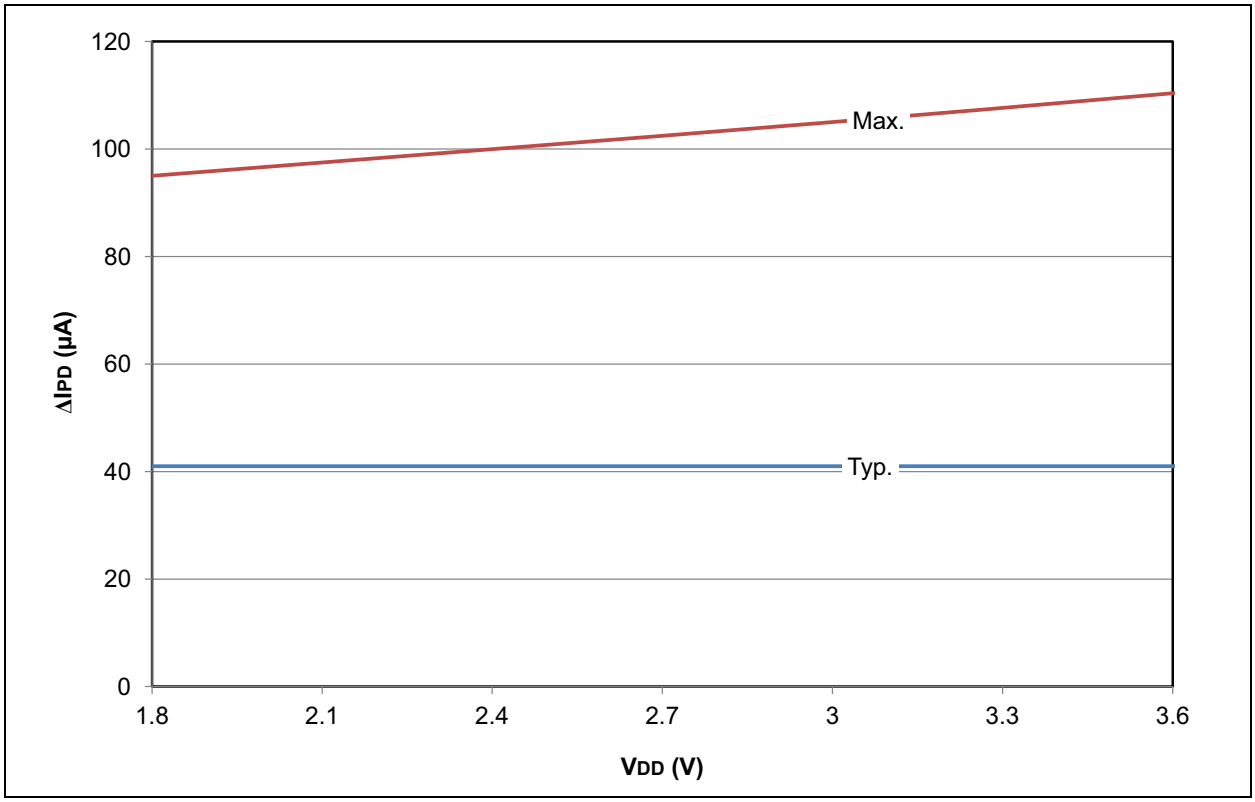

FIGURE 28-14: PIC18F2X/4XK22 DELTA IPD COMPARATOR HIGH-POWER MODE

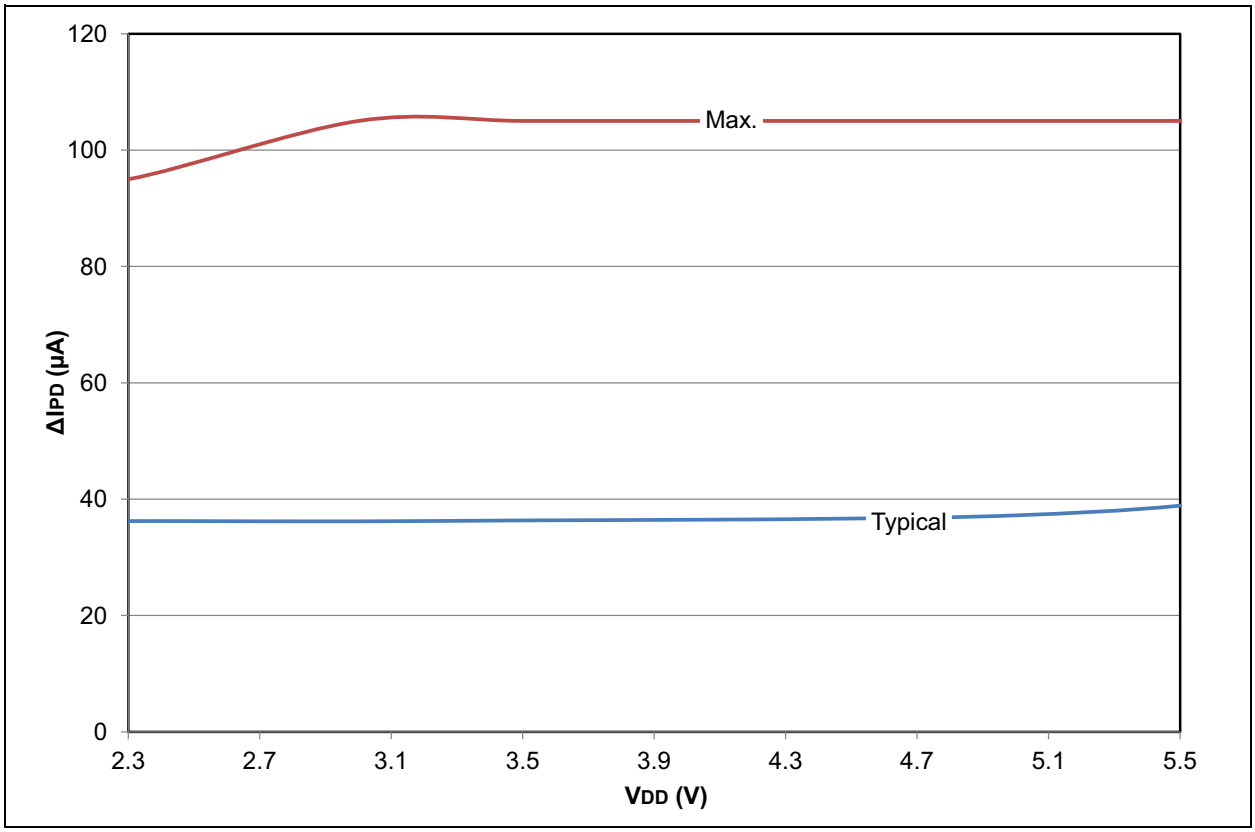

© 2010-2016 Microchip Technology Inc.

FIGURE 28-15: PIC18LF2X/4XK22 DELTA IPD DAC

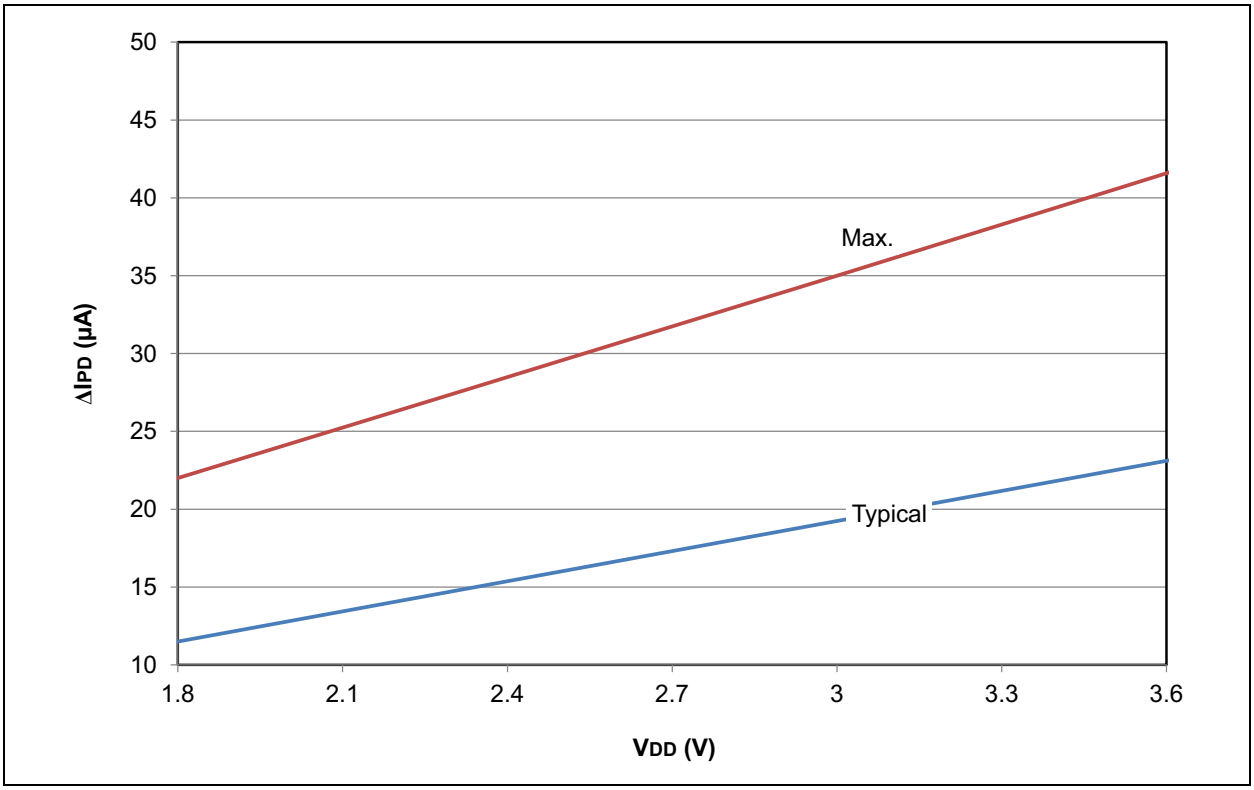

FIGURE 28-16: PIC18F2X/4XK22 DELTA IPD DAC

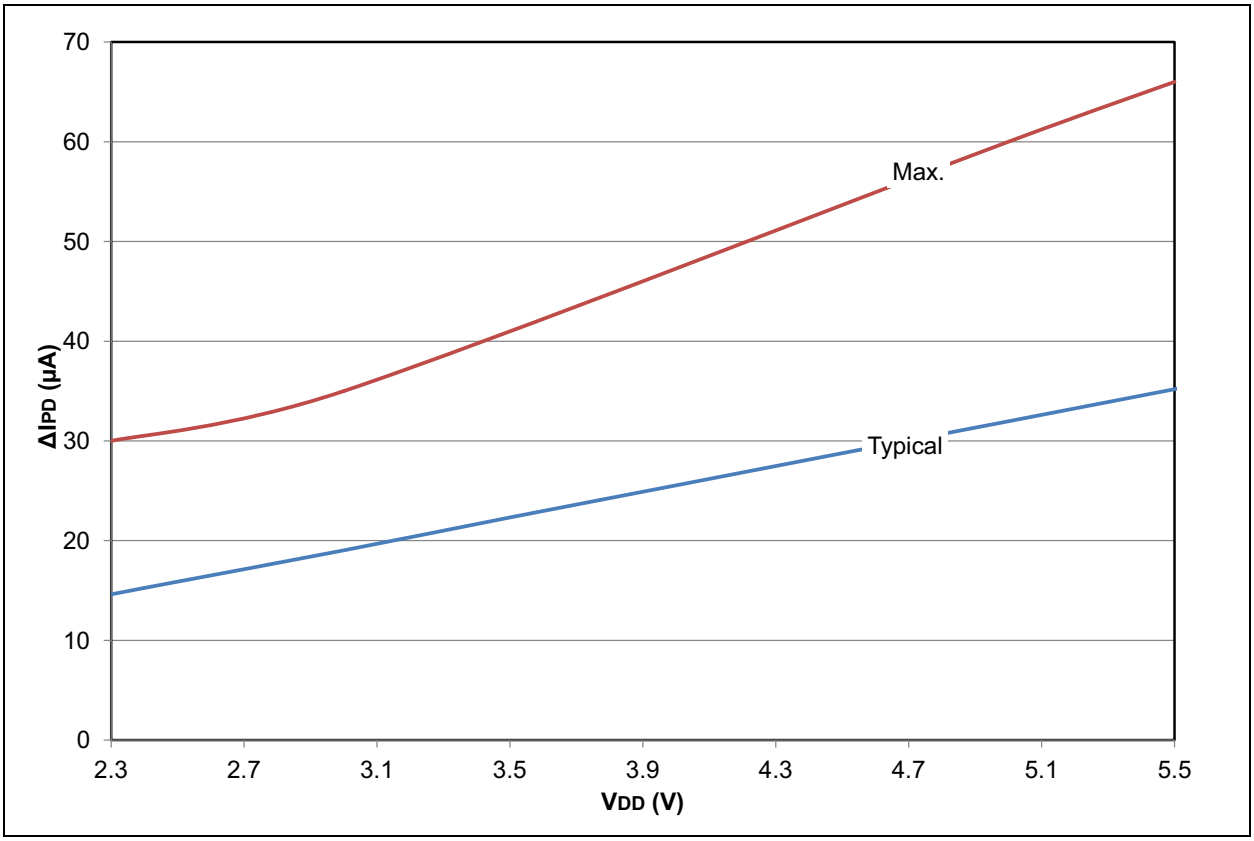

FIGURE 28-17: PIC18LF2X/4XK22 DELTA IPD FVR

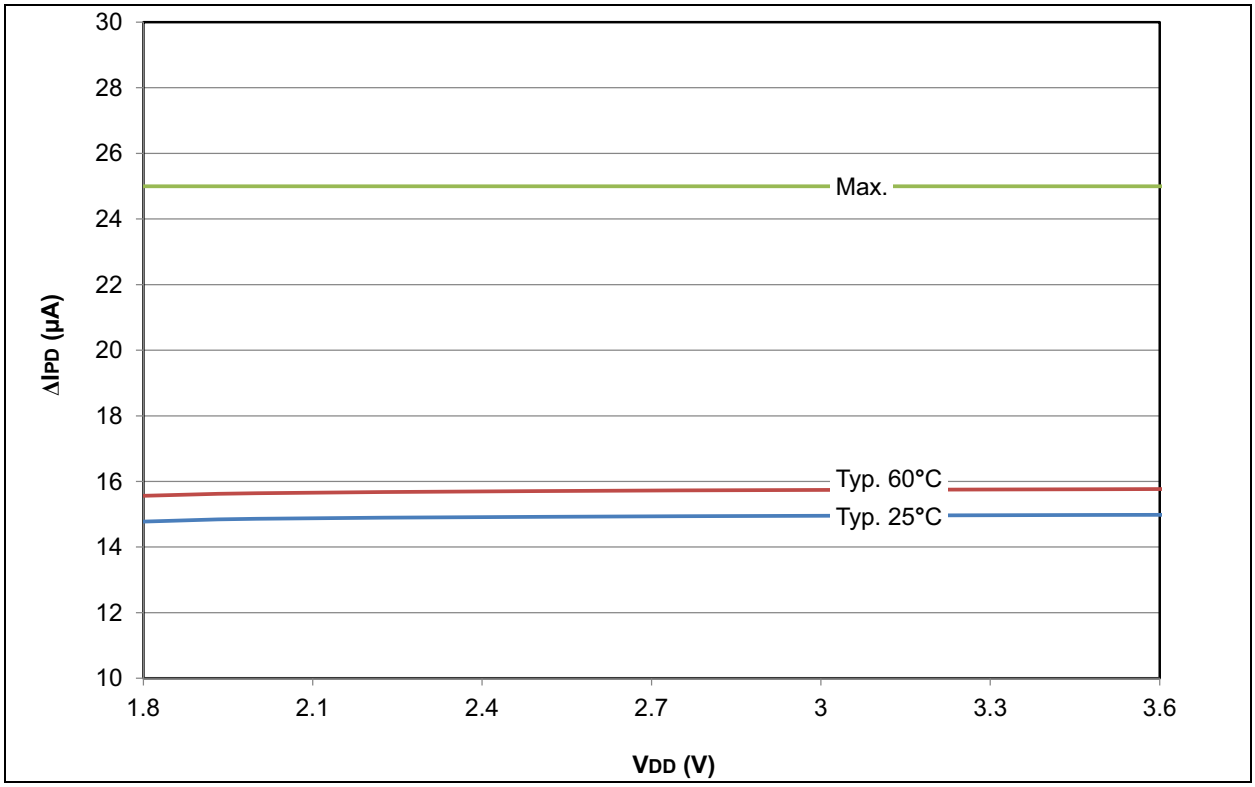

FIGURE 28-18: PIC18F2X/4XK22 DELTA IPD FVR

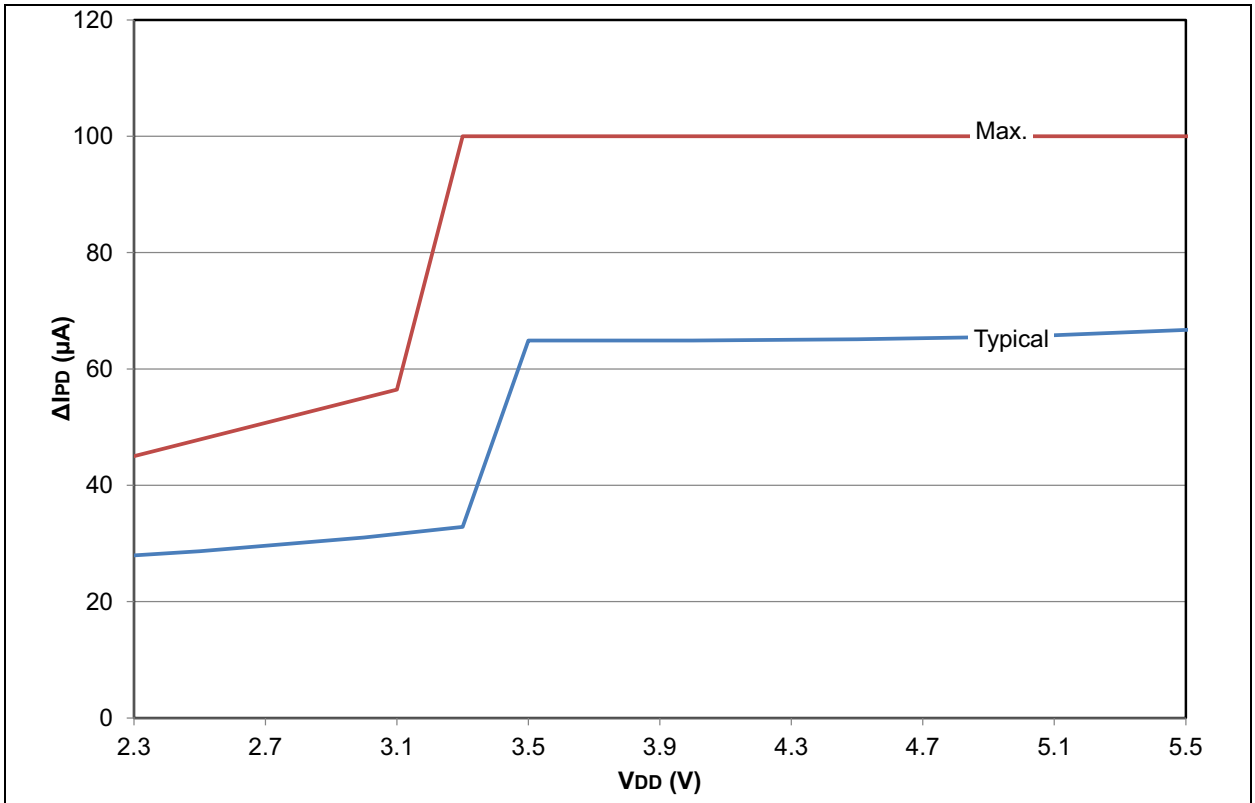

Note 1: On the PIC18F2X/4XK22, enabling the FVR results in significantly more Sleep current when the part enters Voltage Regulation mode at VDD ~ 3.2V.

© 2010-2016 Microchip Technology Inc.

FIGURE 28-19: PIC18(L)F2X/4XK22 DELTA IDD A/D CONVERTOR[1]

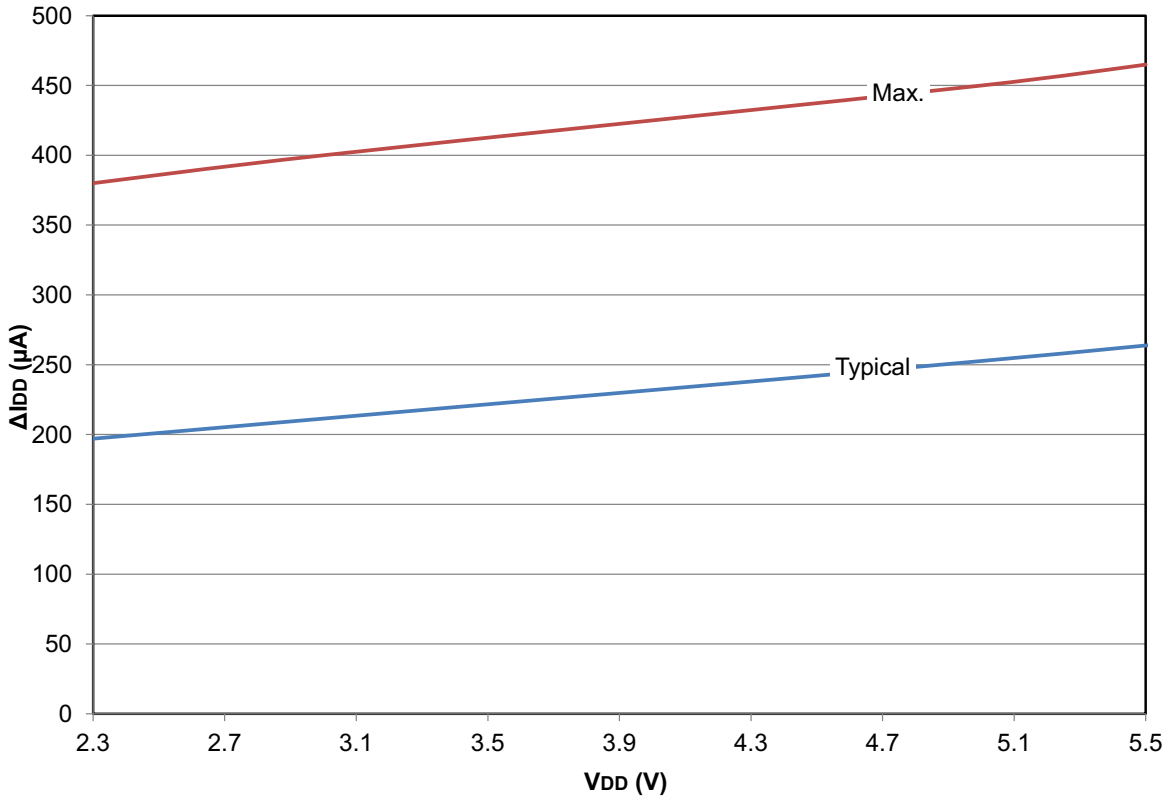

Note 1: A/D converter differential currents apply only in Run mode. In Sleep or Idle mode, both the ADC and the FRC turn off as soon as conversion (if any) is complete.

FIGURE 28-20: PIC18LF2X/4XK22 TYPICAL IDD: RC_RUN LF-INTOSC 31 kHz

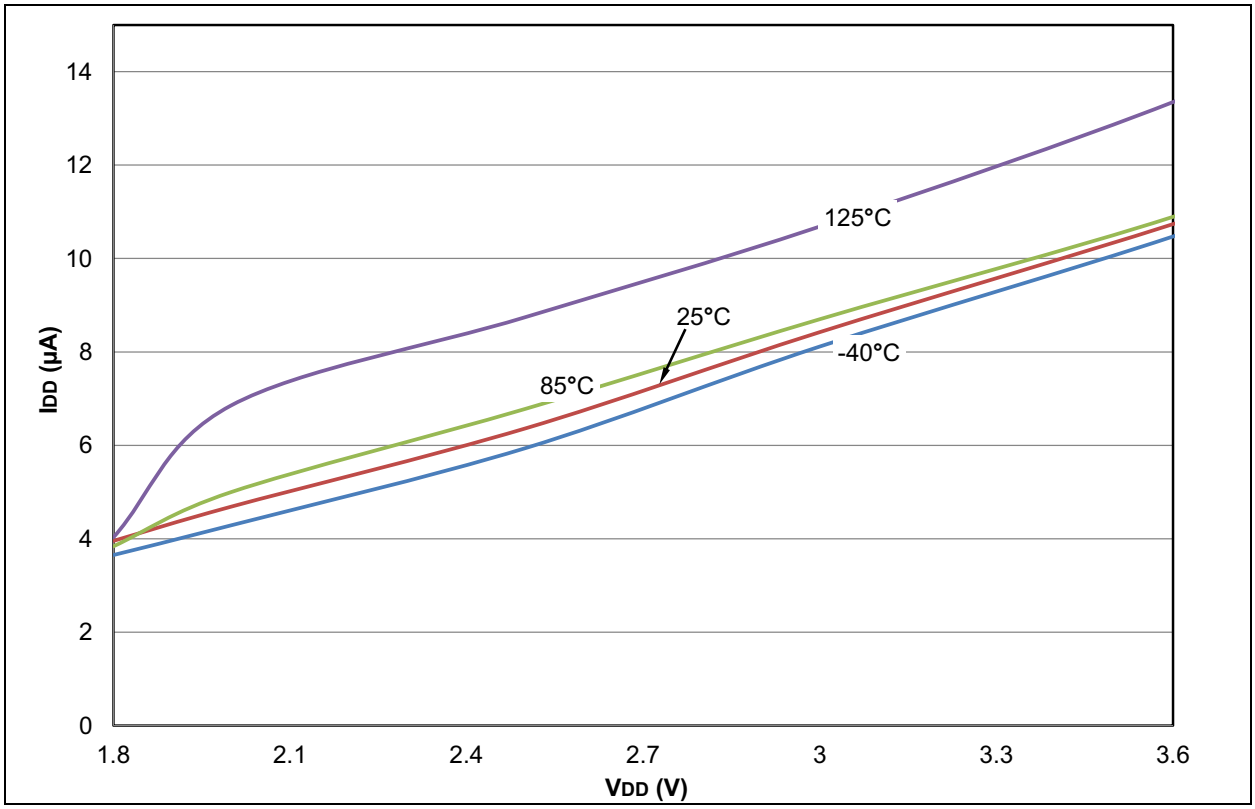

FIGURE 28-21: PIC18LF2X/4XK22 MAXIMUM IDD: RC_RUN LF-INTOSC 31 kHz

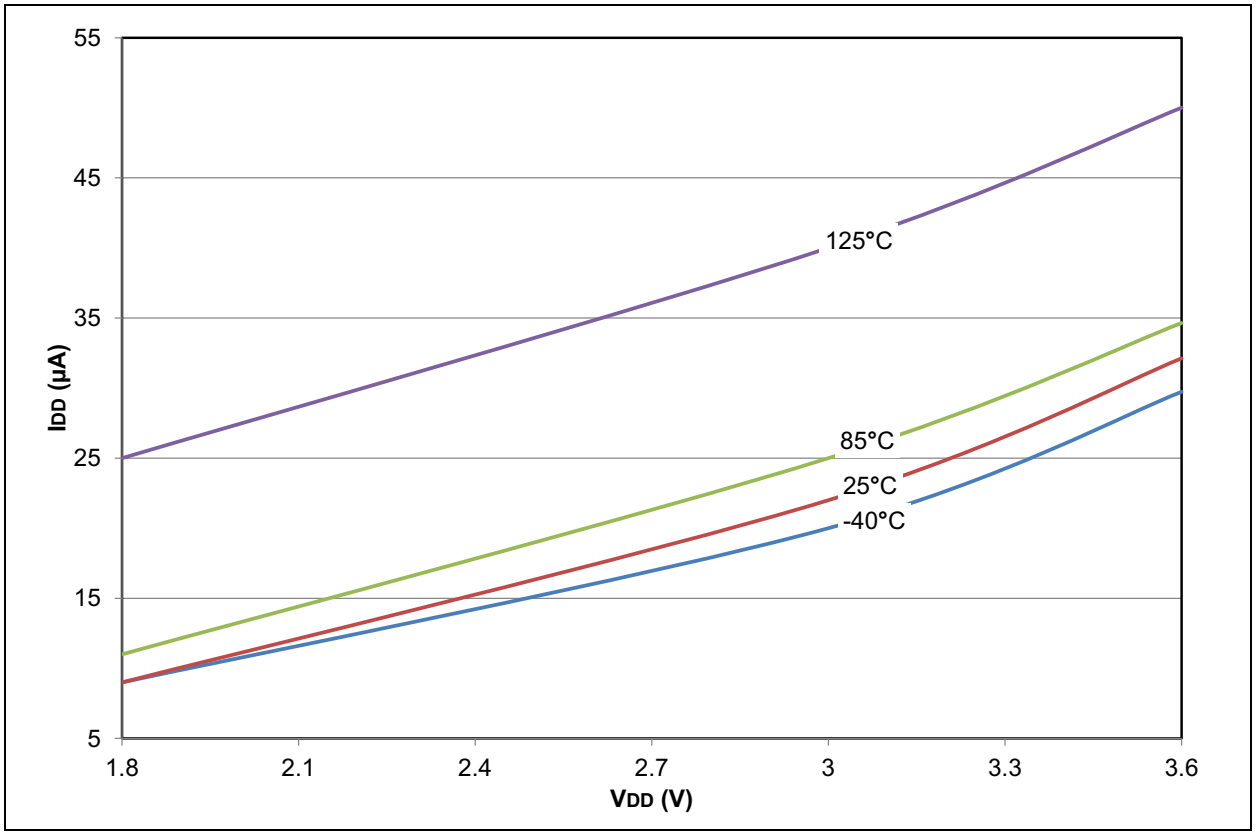

© 2010-2016 Microchip Technology Inc.

FIGURE 28-22: PIC18F2X/4XK22 TYPICAL IDD: RC_RUN LF-INTOSC 31 kHz

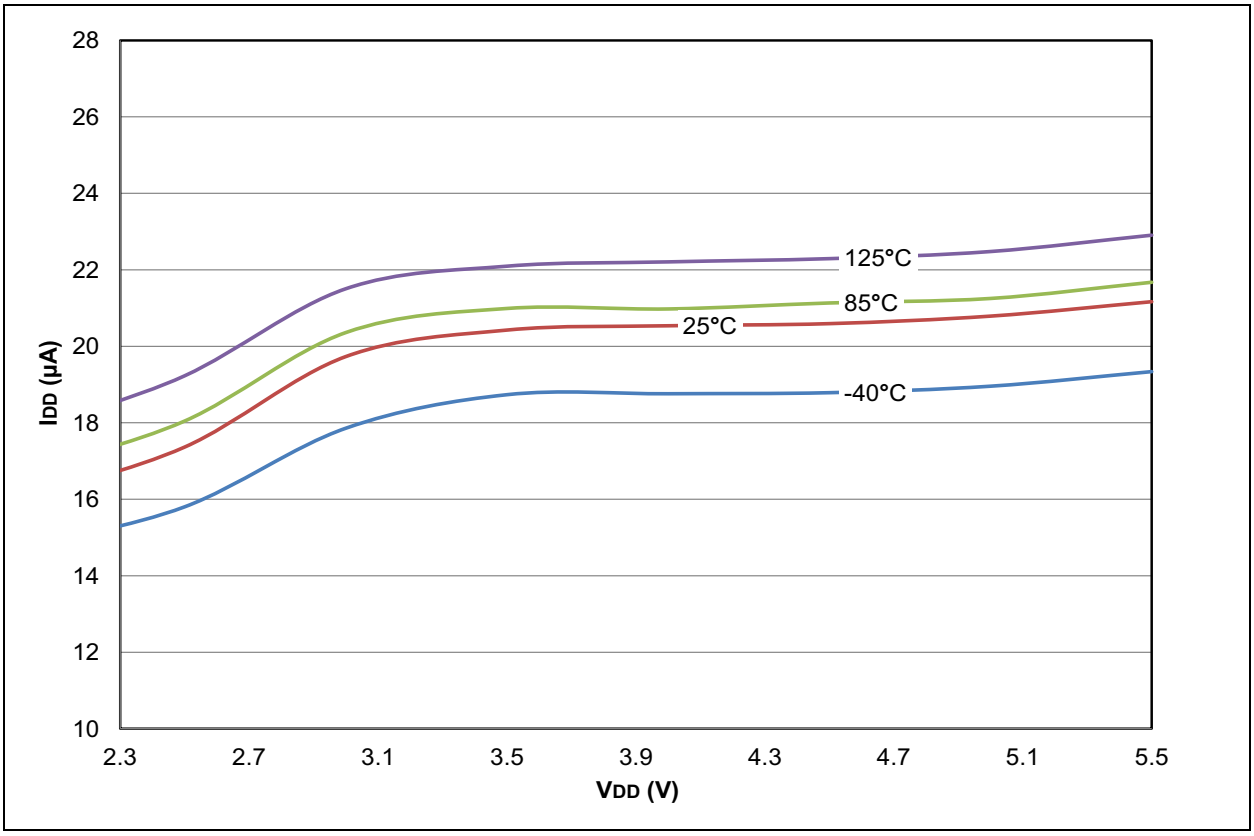

FIGURE 28-23: PIC18F2X/4XK22 MAXIMUM IDD: RC_RUN LF-INTOSC 31 kHz

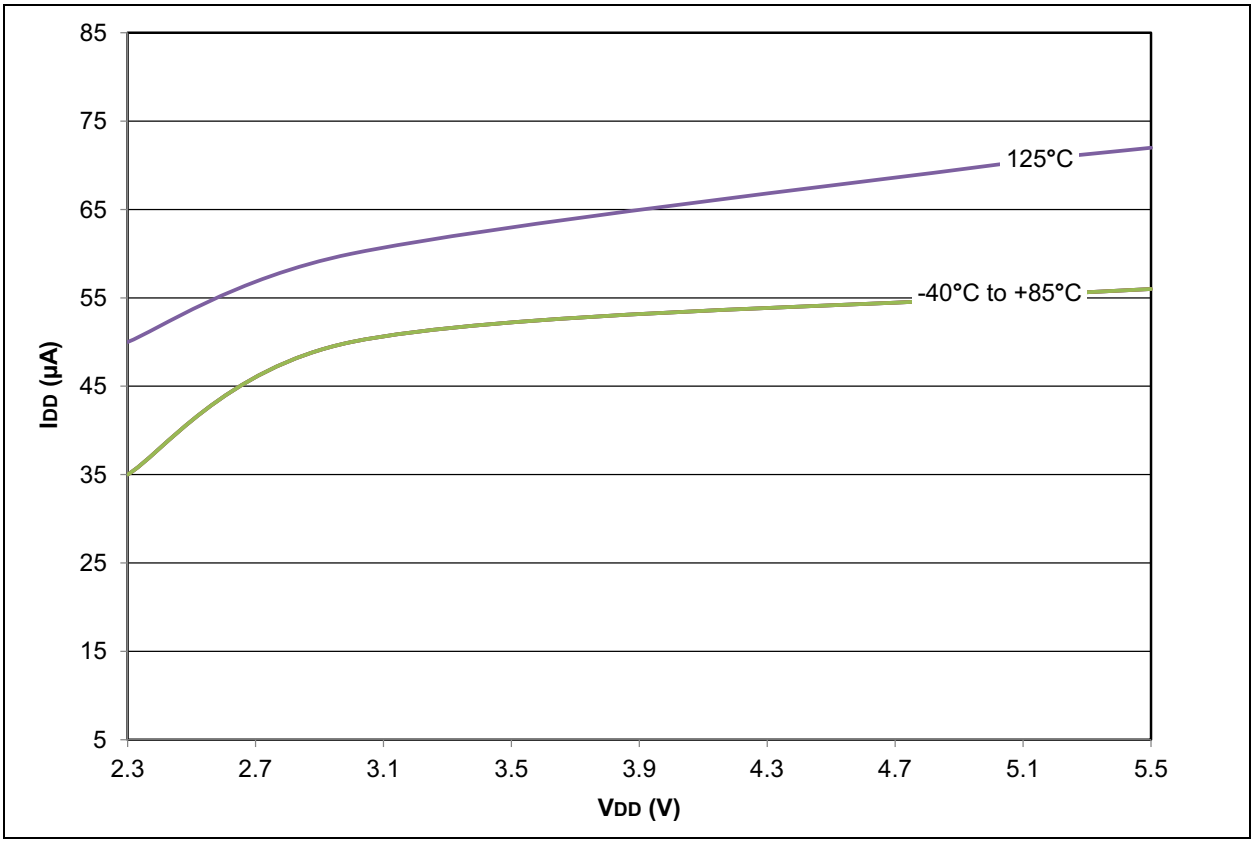

FIGURE 28-24: PIC18LF2X/4XK22 IDD: RC_RUN MF-INTOSC 500 kHz

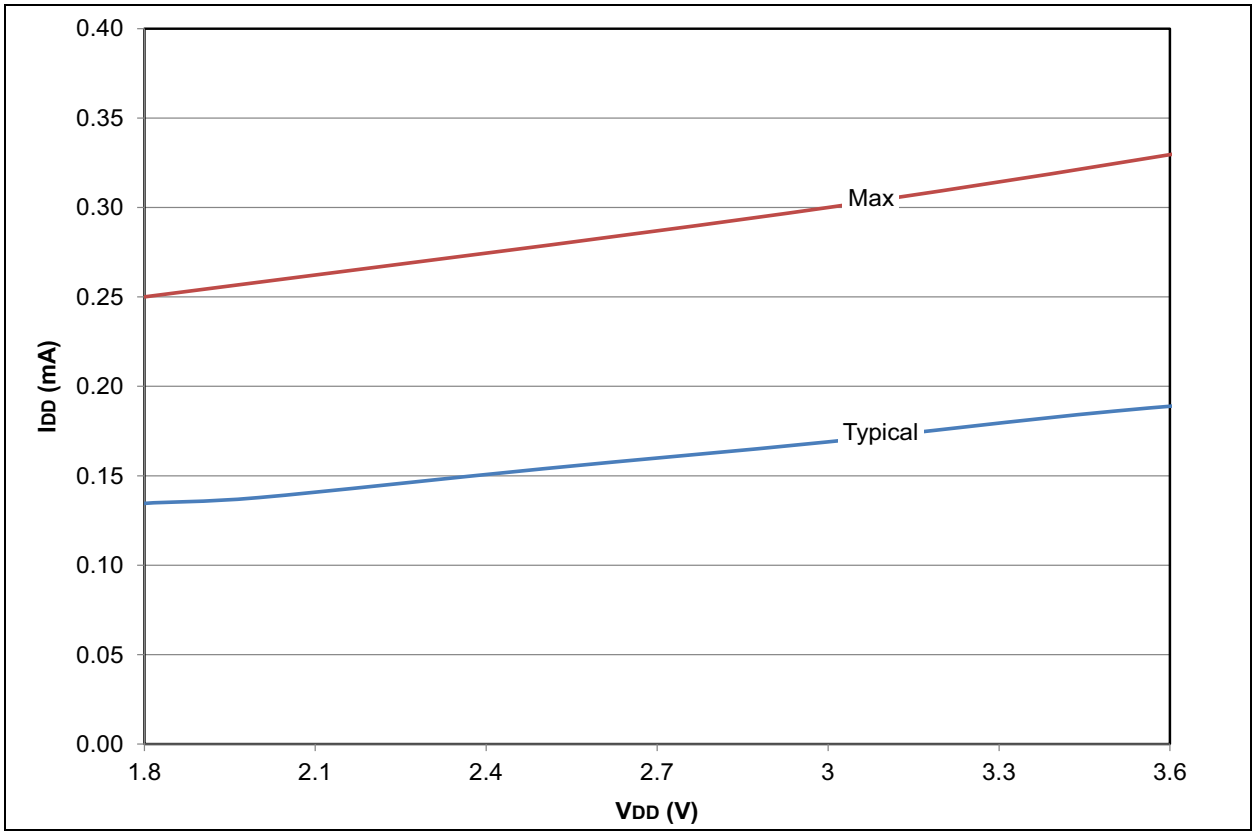

FIGURE 28-25: PIC18F2X/4XK22 IDD: RC_RUN MF-INTOSC 500 kHz

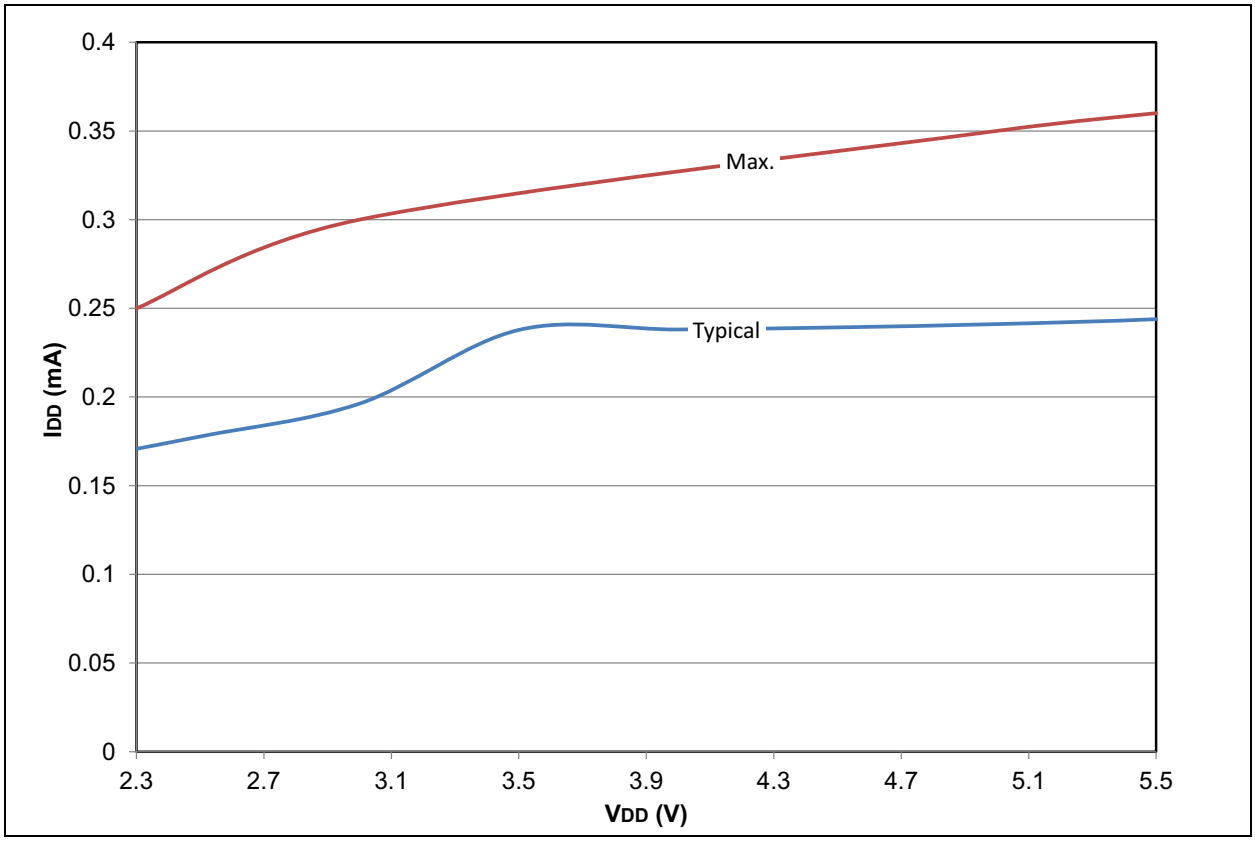

© 2010-2016 Microchip Technology Inc.

FIGURE 28-26: PIC18LF2X/4XK22 TYPICAL IDD: RC_RUN HF-INTOSC

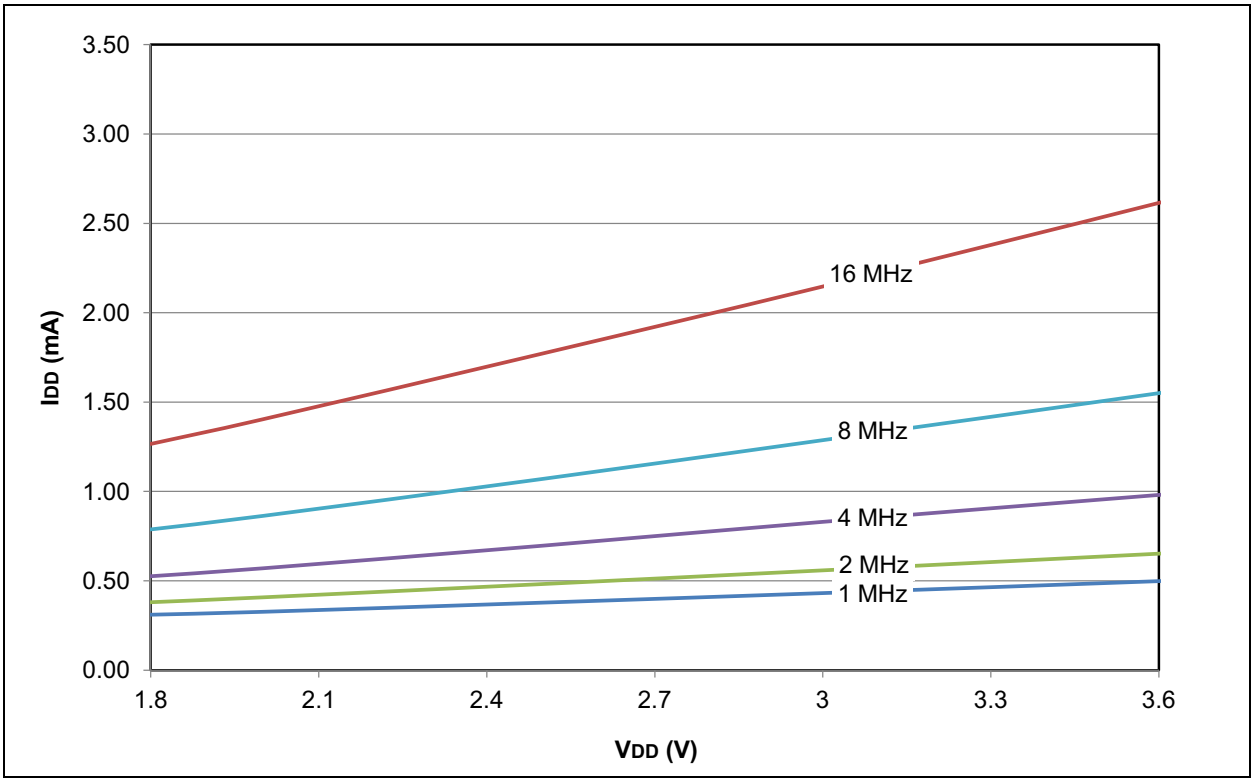

FIGURE 28-27: PIC18LF2X/4XK22 MAXIMUM IDD: RC_RUN HF-INTOSC

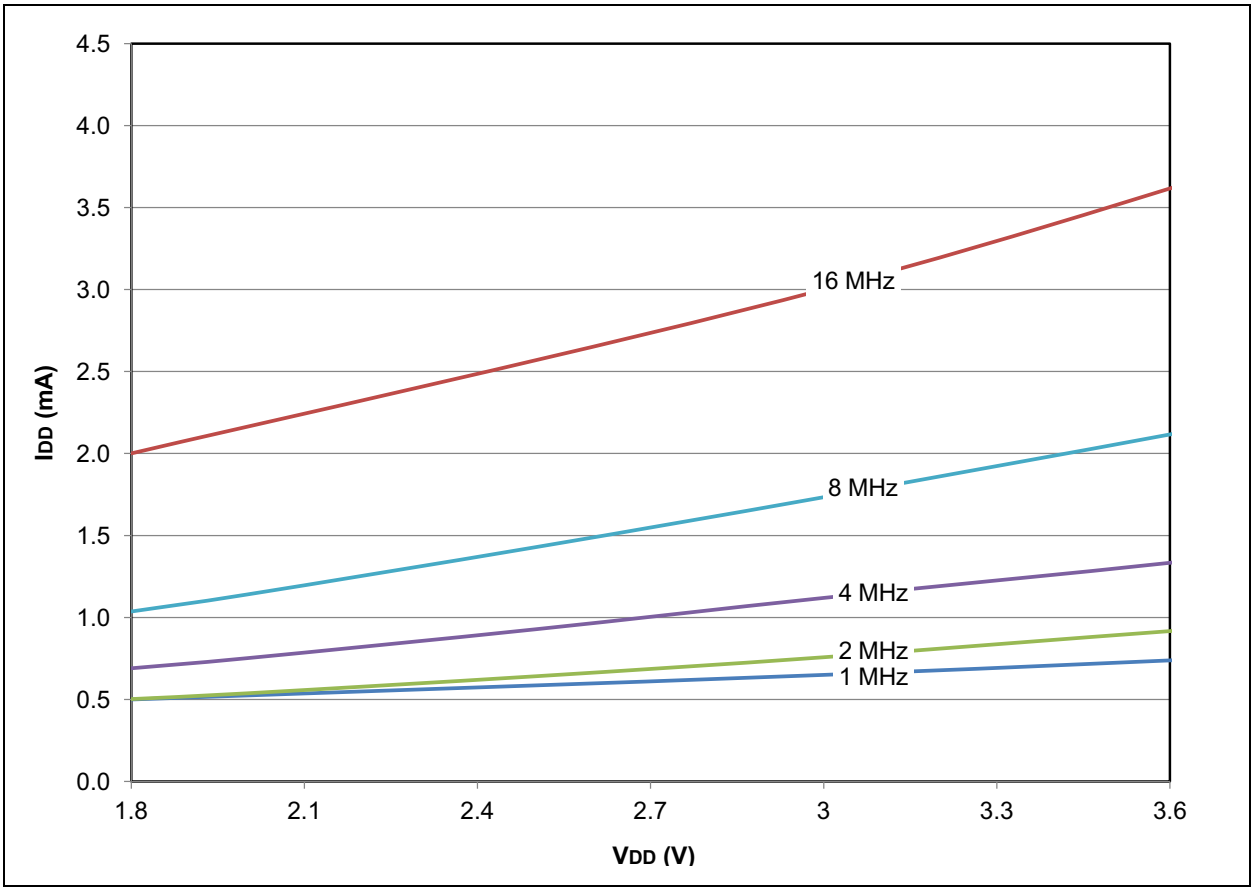

FIGURE 28-28: PIC18F2X/4XK22 TYPICAL IDD: RC_RUN HF-INTOSC

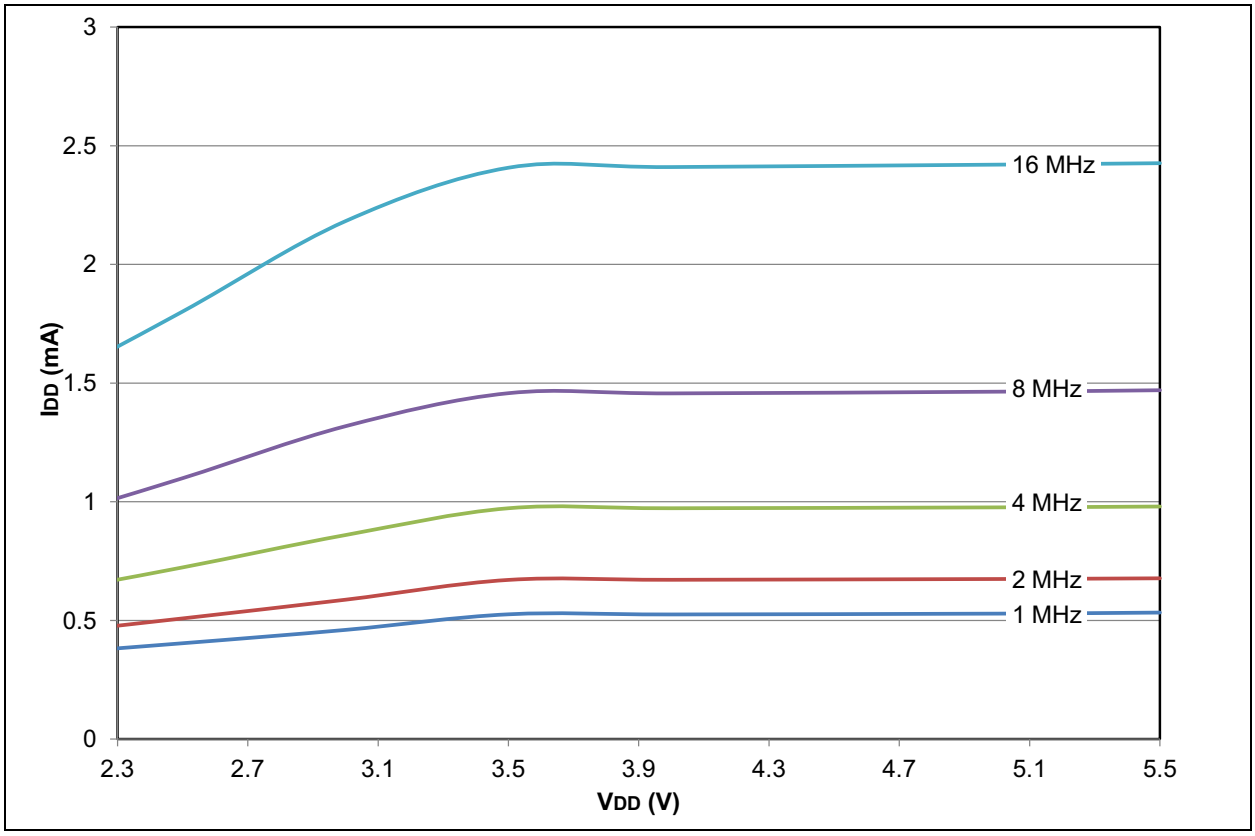

FIGURE 28-29: PIC18F2X/4XK22 MAXIMUM IDD: RC_RUN HF-INTOSC

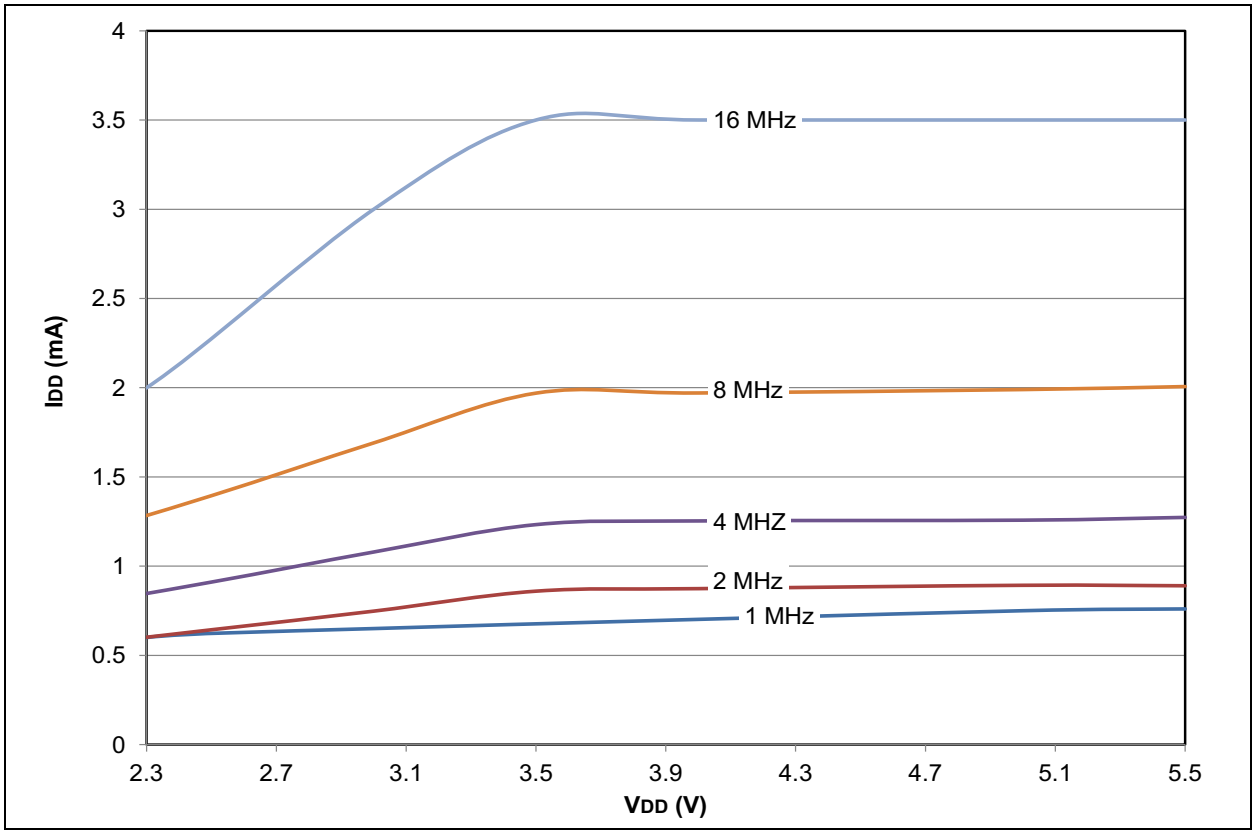

© 2010-2016 Microchip Technology Inc.

FIGURE 28-30: PIC18LF2X/4XK22 TYPICAL IDD: RC_RUN HF-INTOSC with PLL

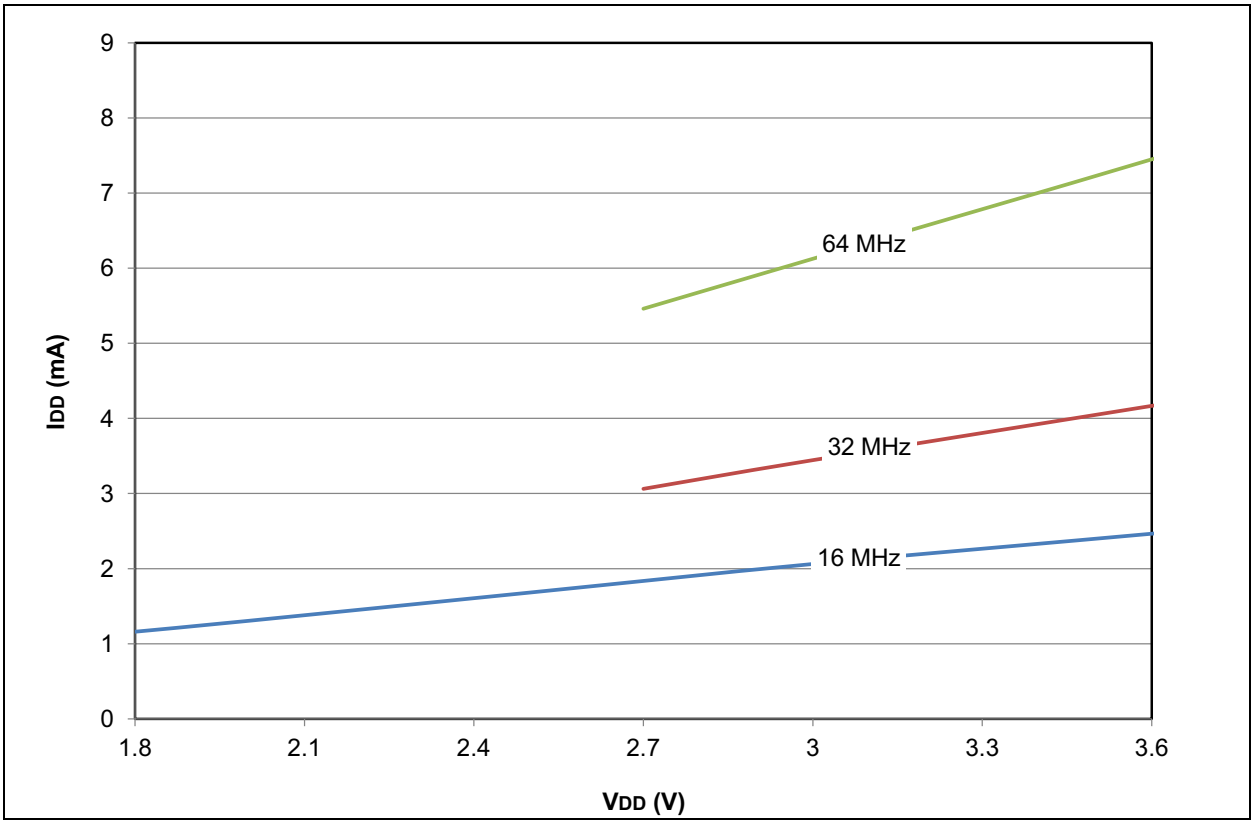

FIGURE 28-31: PIC18LF2X/4XK22 MAXIMUM IDD: RC_RUN HF-INTOSC with PLL

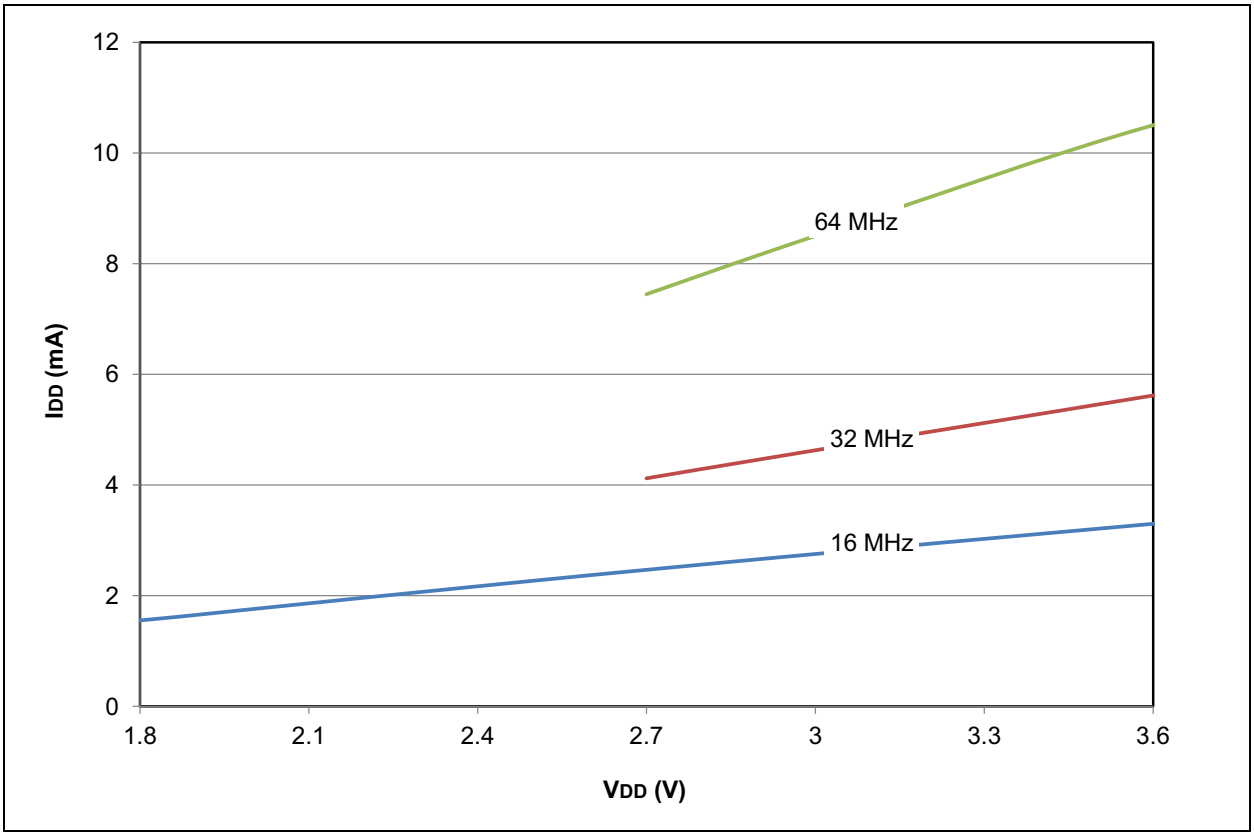

FIGURE 28-32: PIC18F2X/4XK22 TYPICAL IDD: RC_RUN HF-INTOSC with PLL

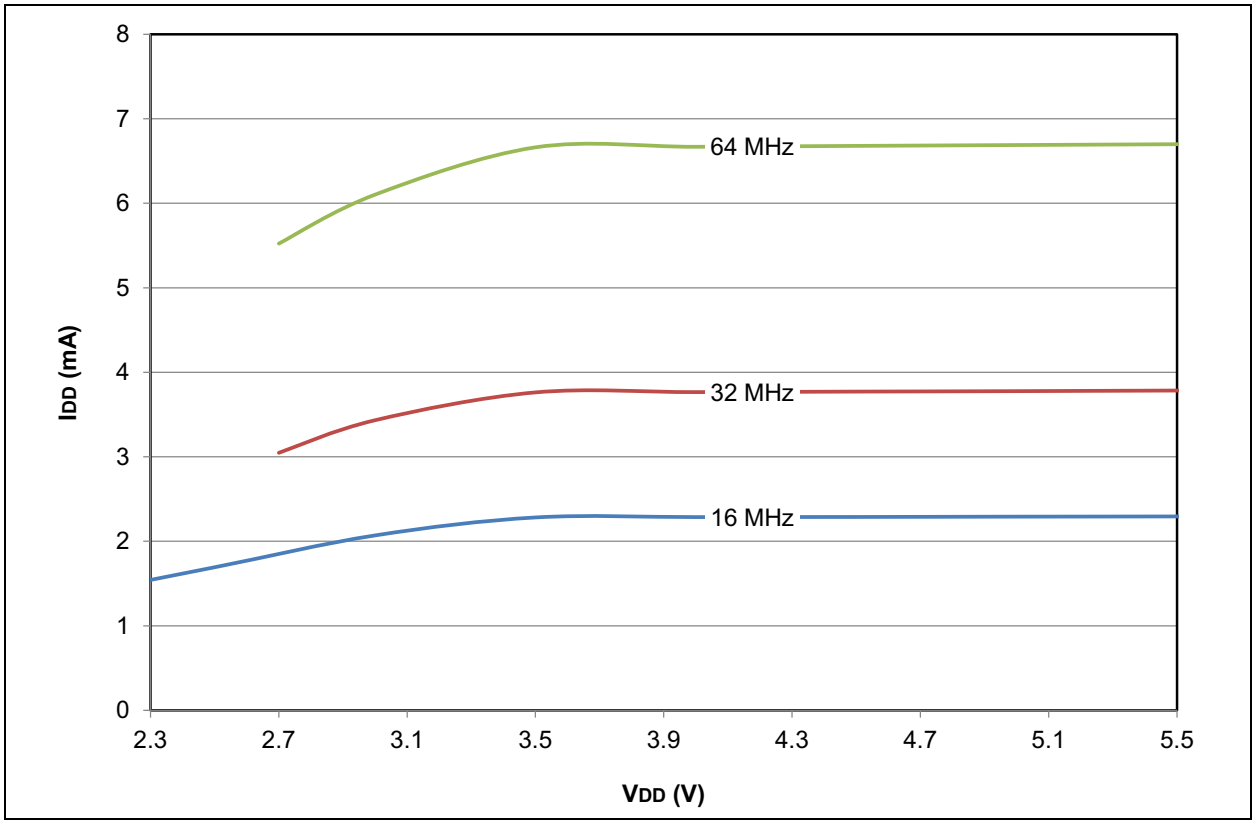

FIGURE 28-33: PIC18F2X/4XK22 MAXIMUM IDD: RC_RUN HF-INTOSC with PLL

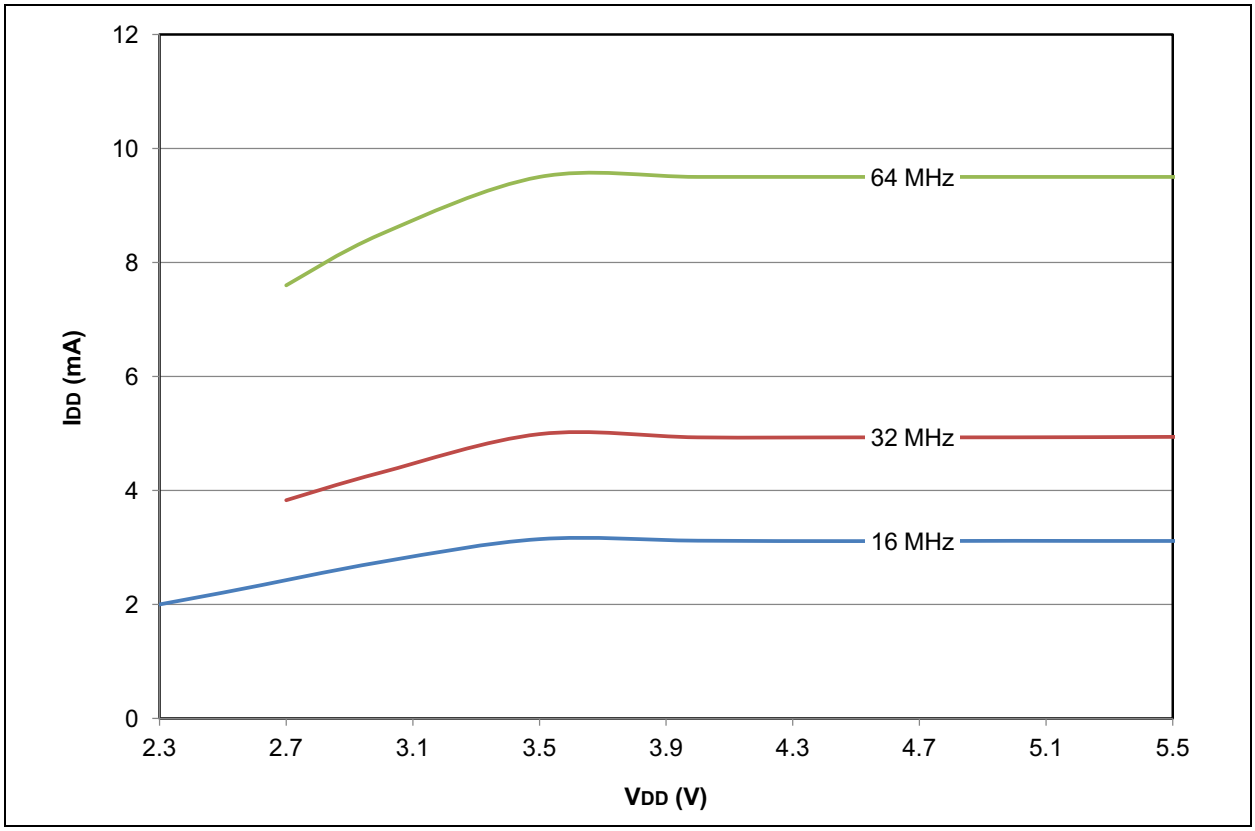

© 2010-2016 Microchip Technology Inc.

FIGURE 28-34: PIC18LF2X/4XK22 TYPICAL IDD: RC_IDLE LF-INTOSC 31 kHz

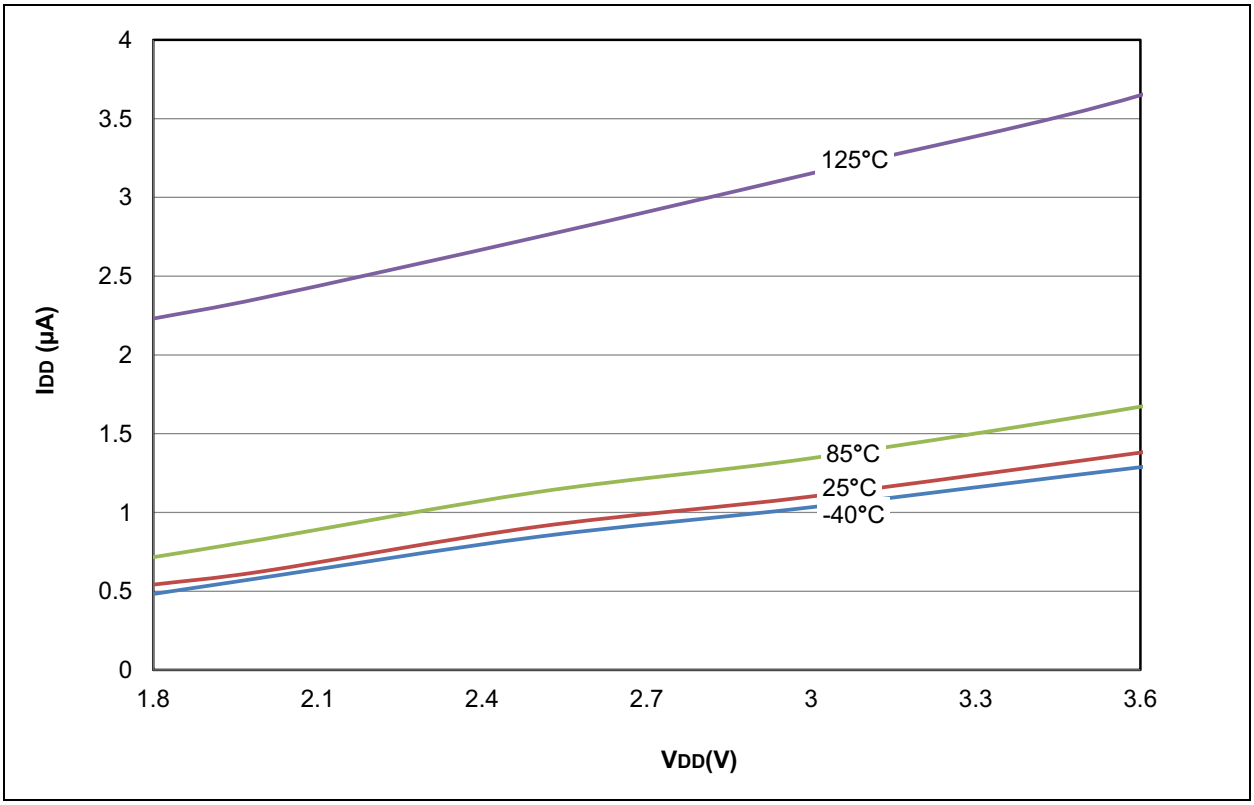

FIGURE 28-35: PIC18LF2X/4XK22 MAXIMUM IDD: RC_IDLE LF-INTOSC 31 kHz

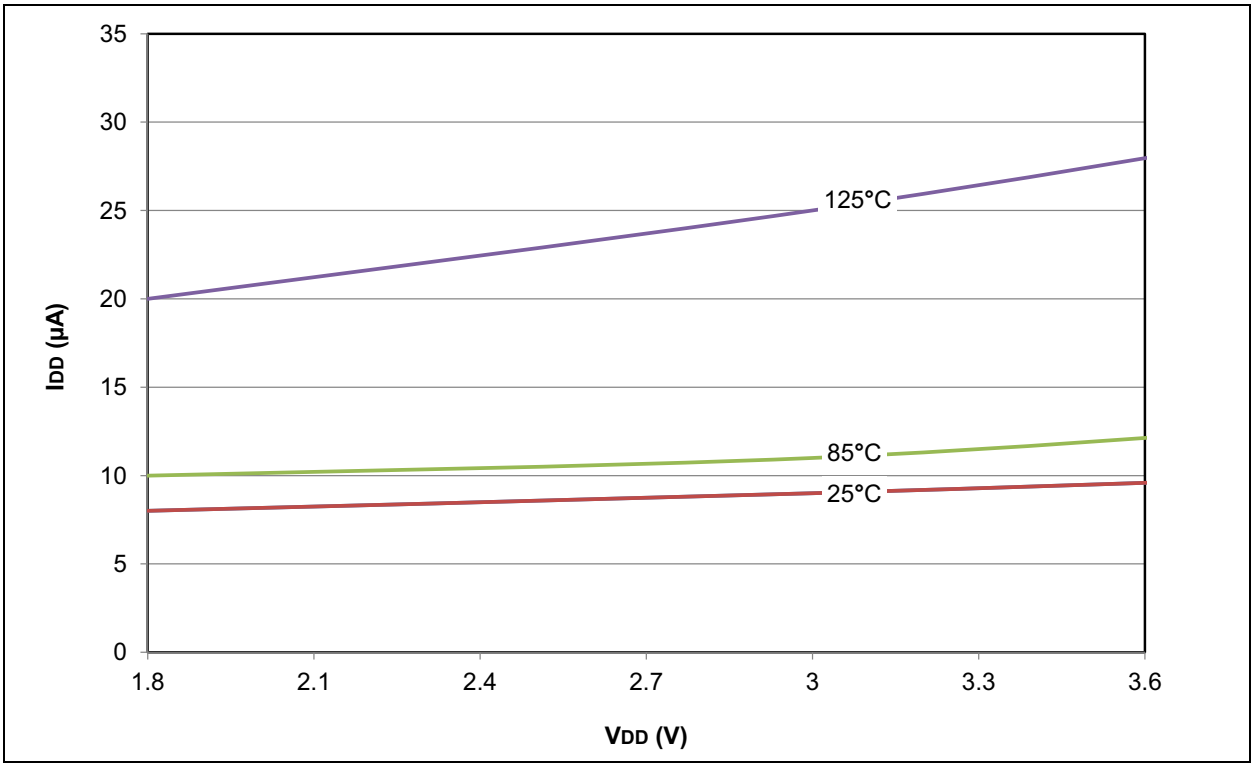

FIGURE 28-36: PIC18F2X/4XK22 TYPICAL IDD: RC_IDLE LF-INTOSC 31 kHz

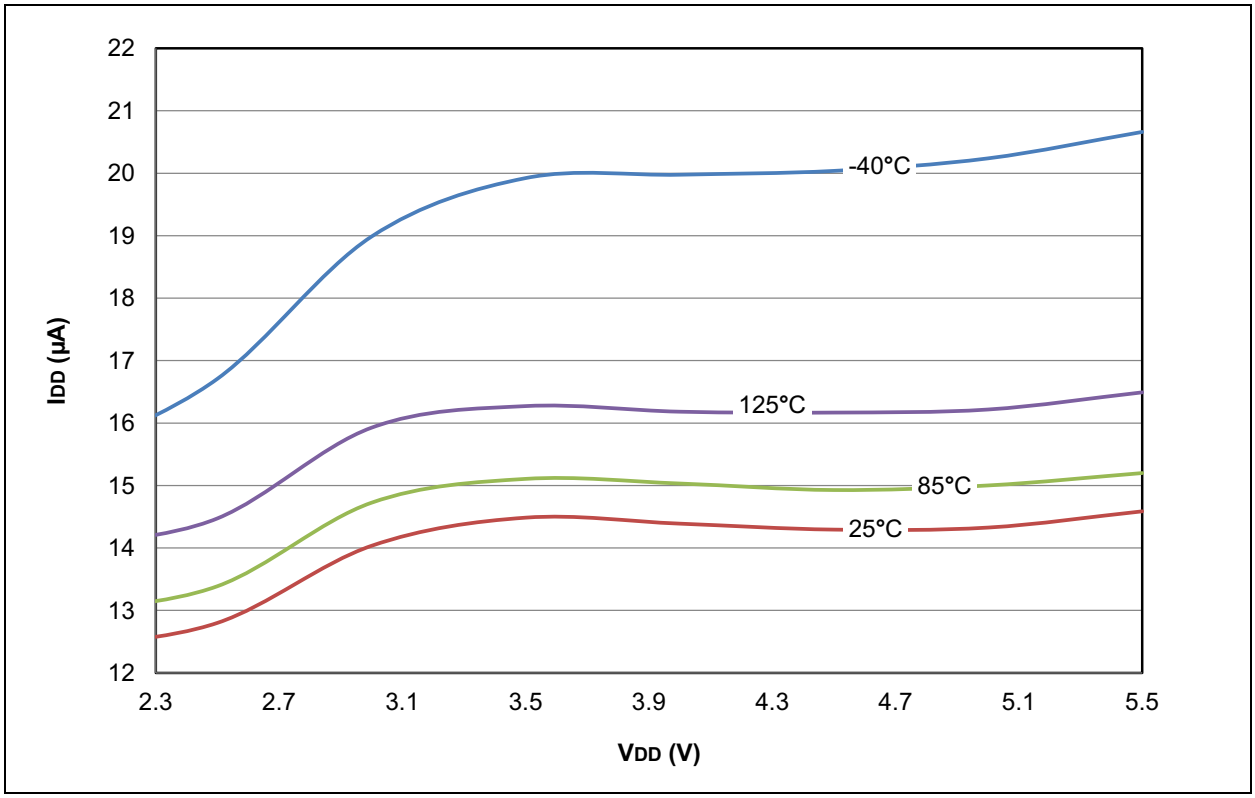

FIGURE 28-37: PIC18F2X/4XK22 MAXIMUM IDD: RC_IDLE LF-INTOSC 31 kHz

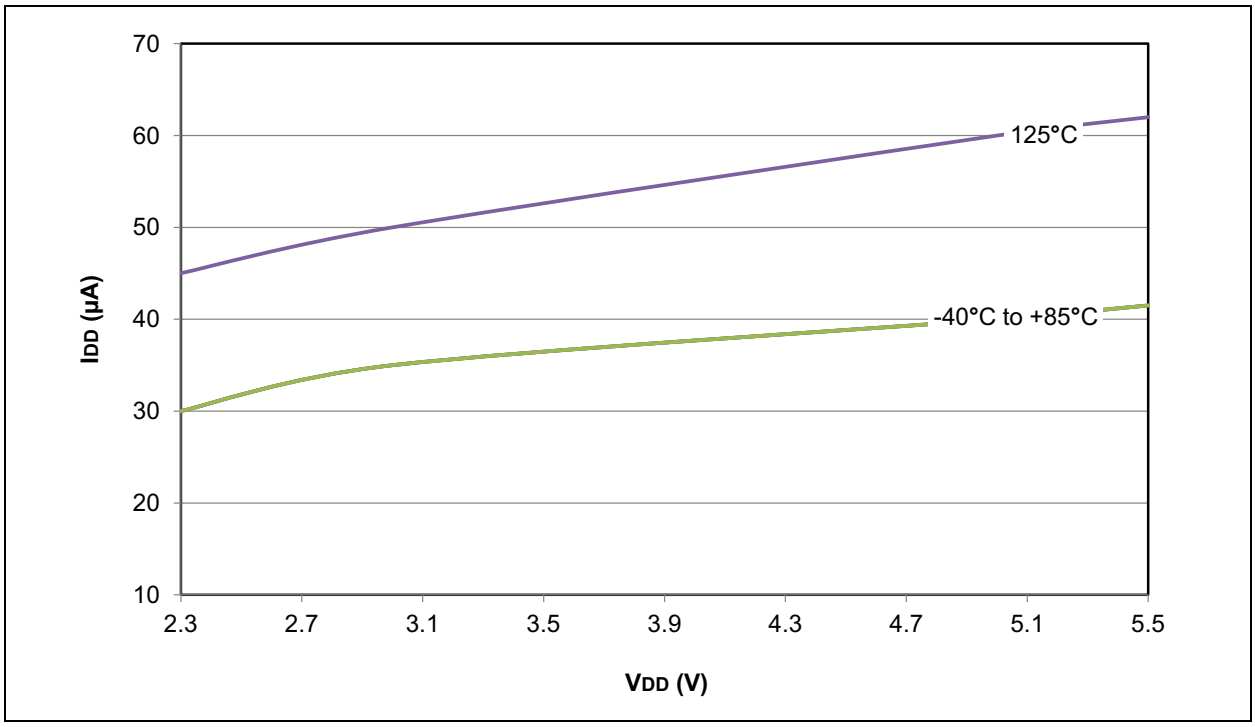

© 2010-2016 Microchip Technology Inc.

FIGURE 28-38: PIC18LF2X/4XK22 IDD: RC_IDLE MF-INTOSC 500 kHz

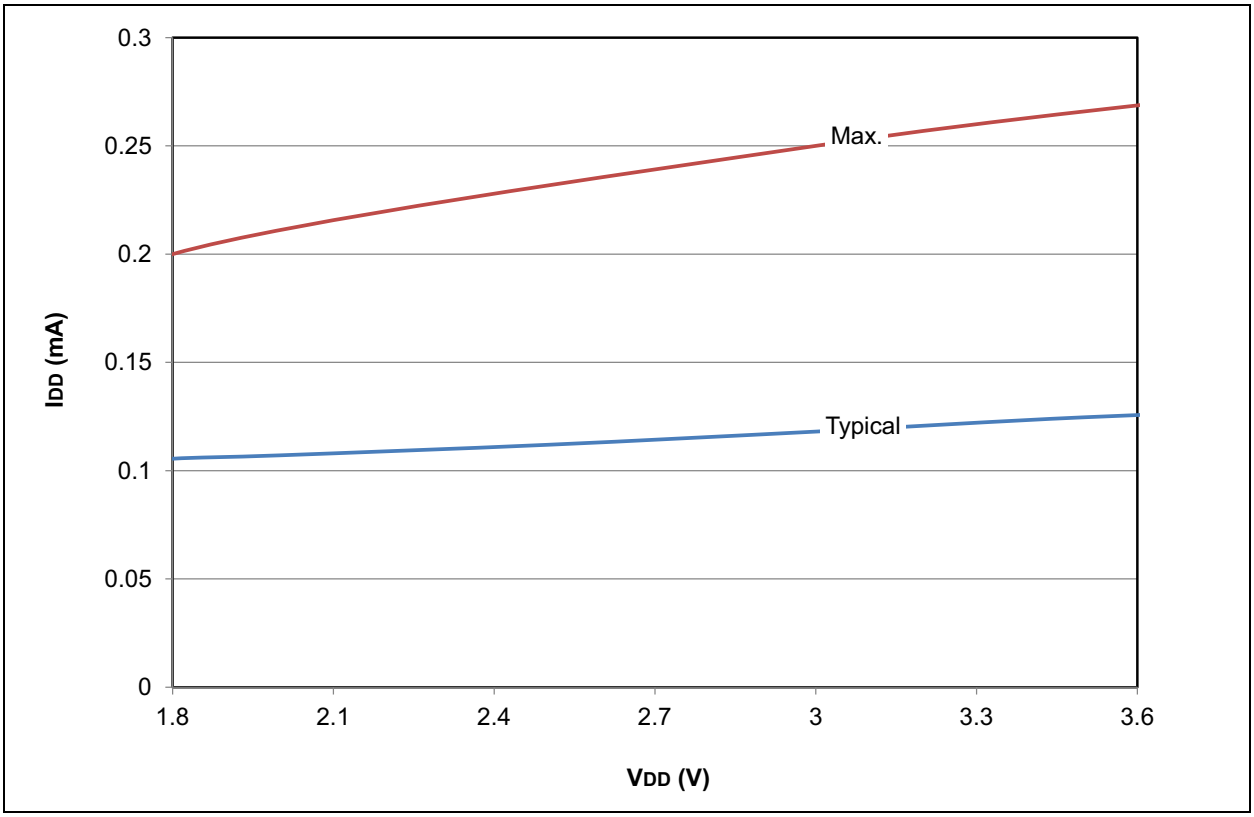

FIGURE 28-39: PIC18F2X/4XK22 IDD: RC_IDLE MF-INTOSC 500 kHz

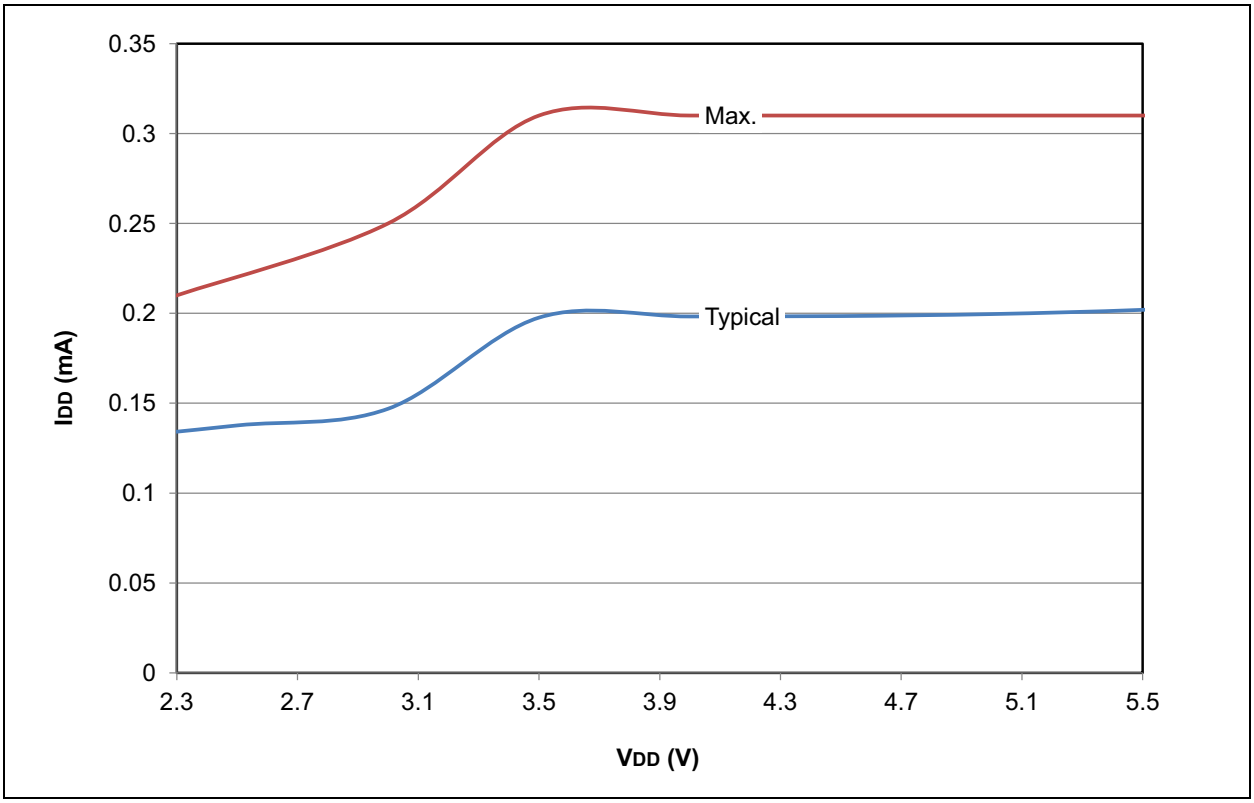

FIGURE 28-40: PIC18LF2X/4XK22 TYPICAL IDD: RC_IDLE HF-INTOSC

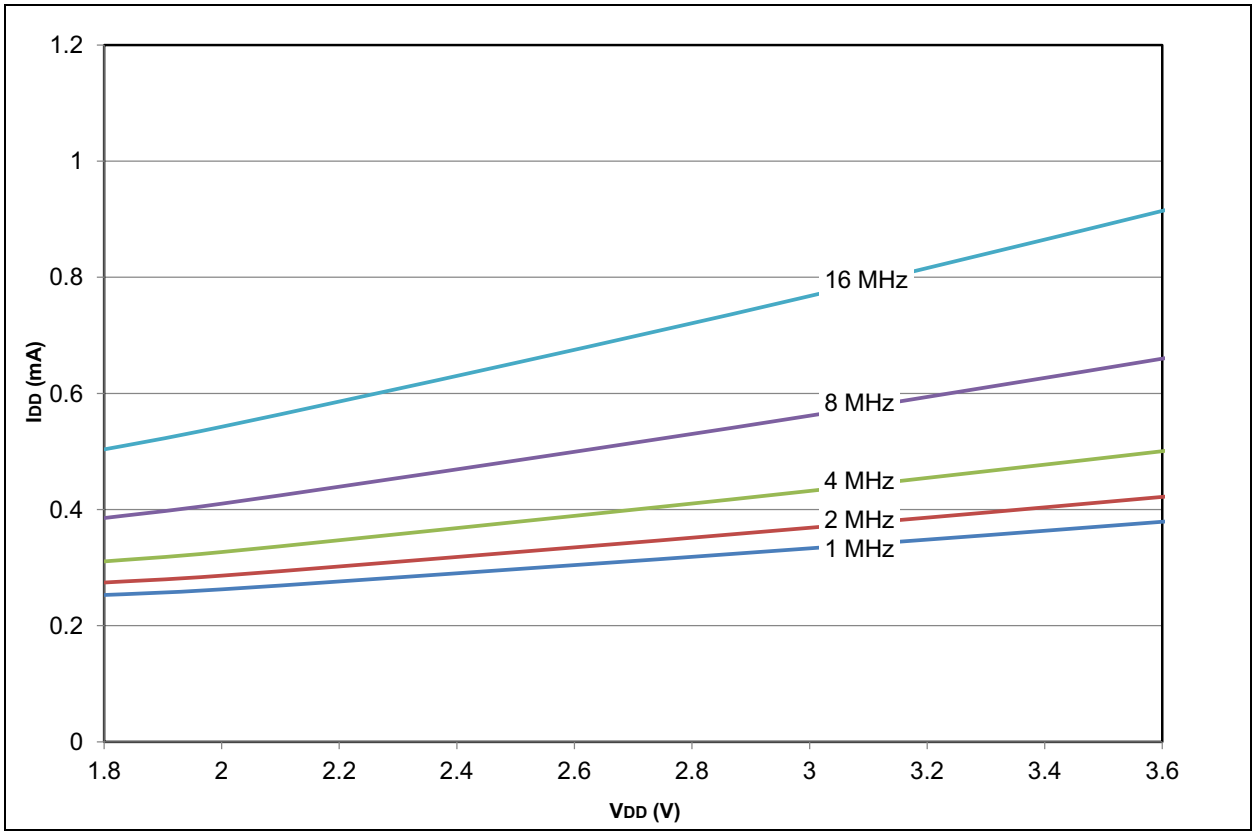

FIGURE 28-41: PIC18LF2X/4XK22 MAXIMUM IDD: RC_IDLE HF-INTOSC

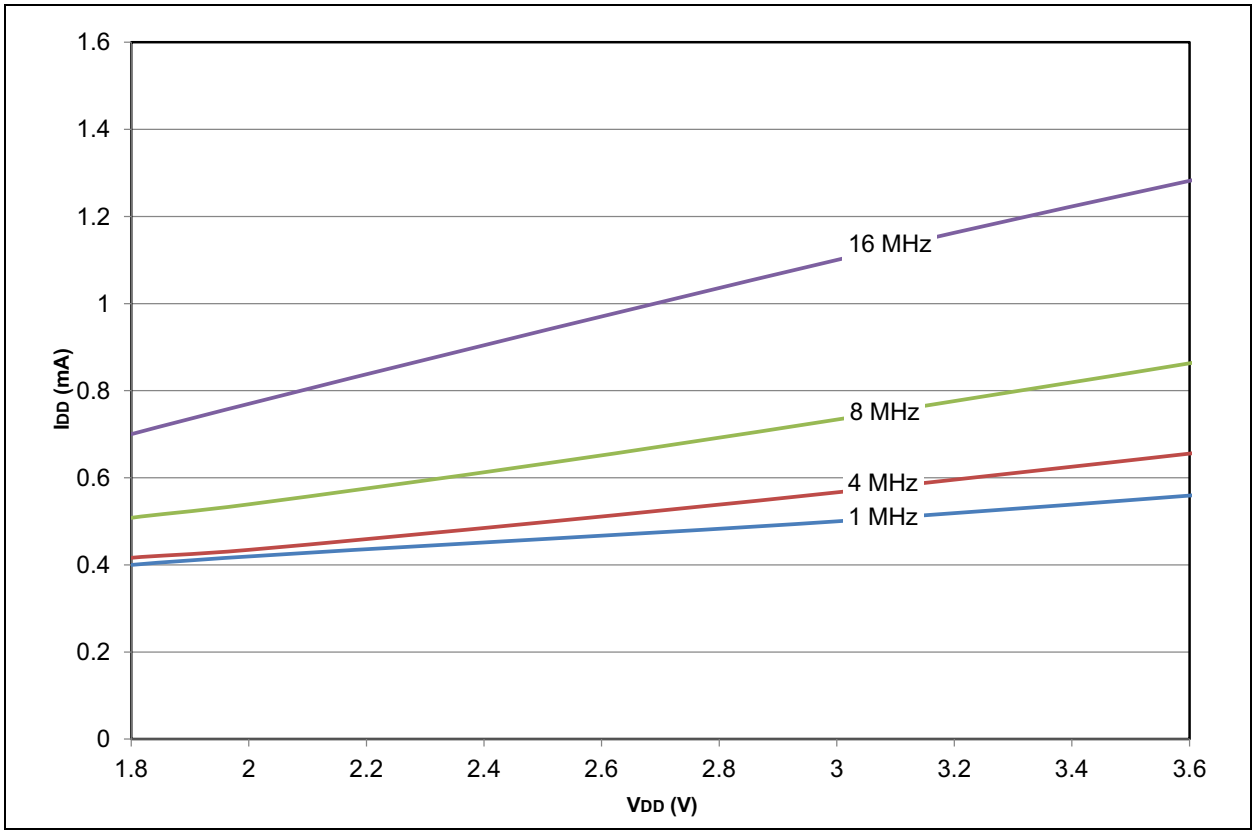

© 2010-2016 Microchip Technology Inc.

FIGURE 28-42: PIC18F2X/4XK22 TYPICAL IDD: RC_IDLE HF-INTOSC

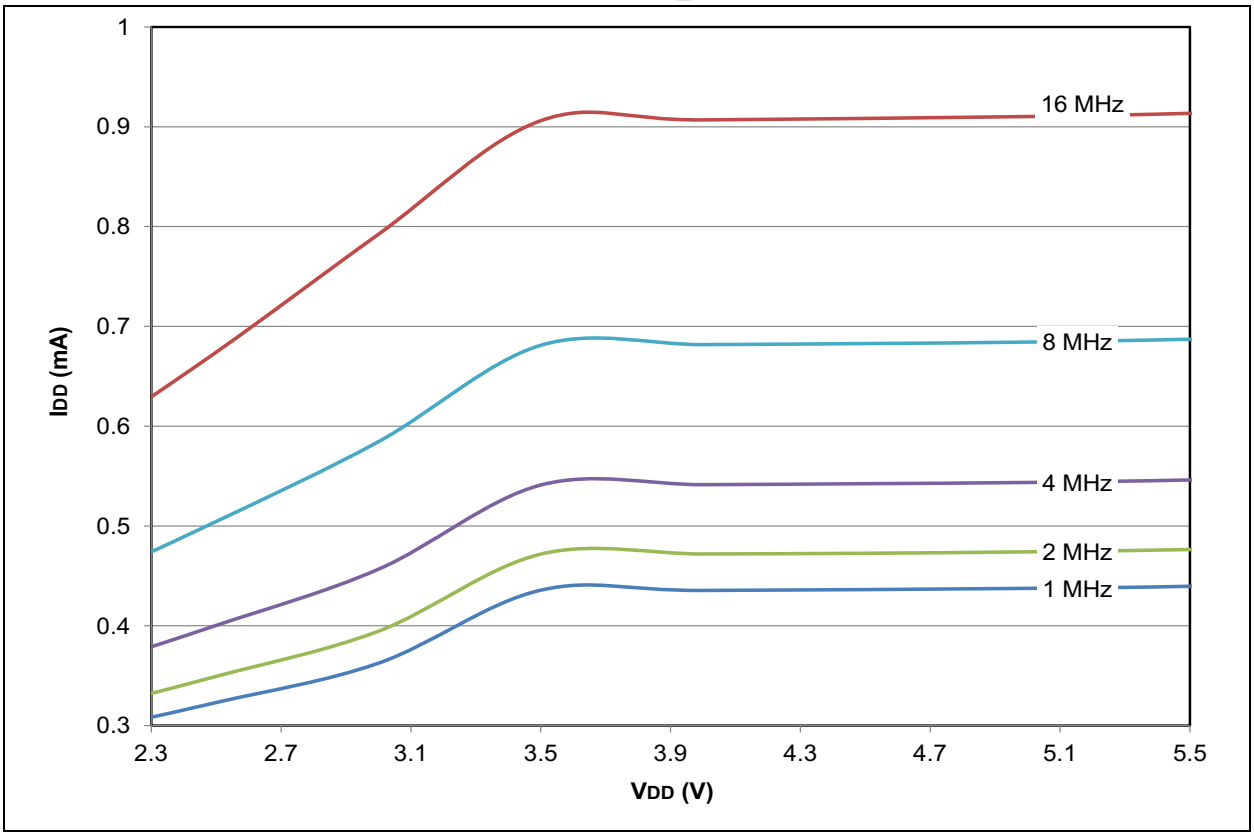

FIGURE 28-43: PIC18F2X/4XK22 MAXIMUM IDD: RC_IDLE HF-INTOSC

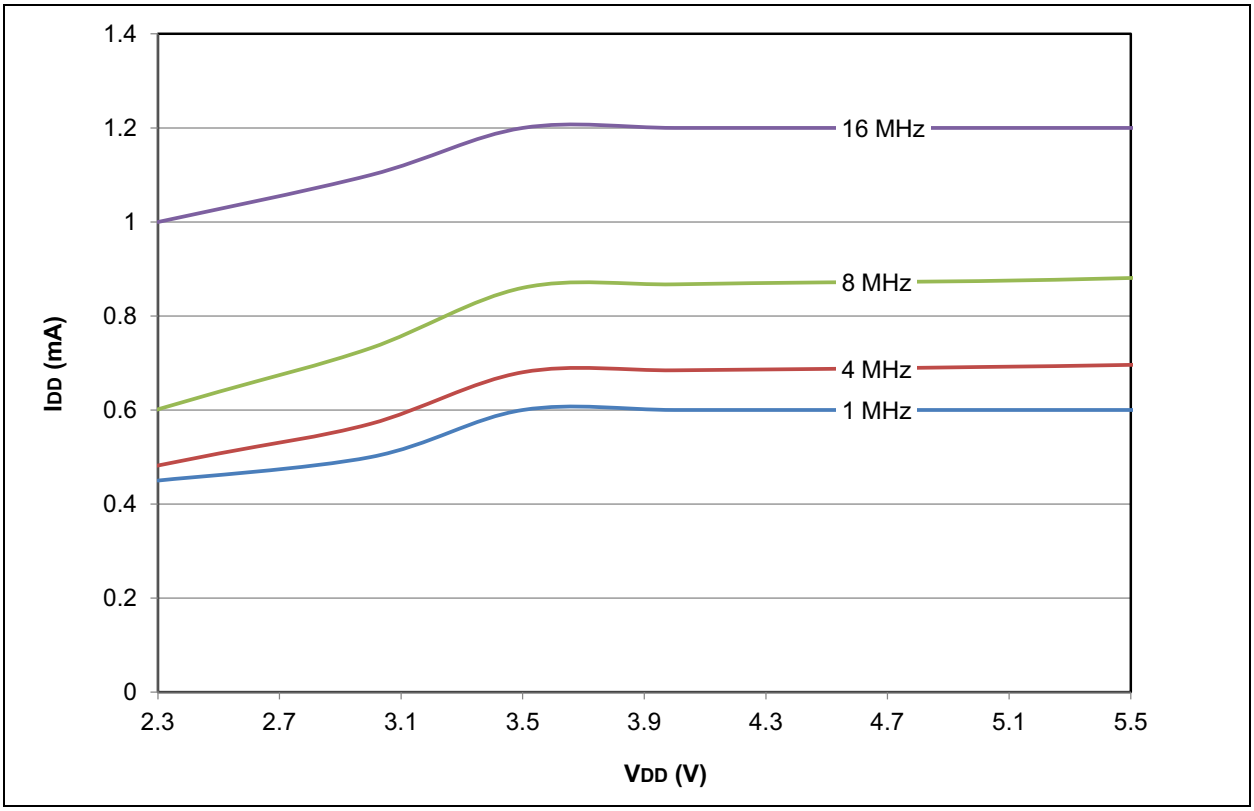

FIGURE 28-44: PIC18LF2X/4XK22 TYPICAL IDD: RC_IDLE HF-INTOSC with PLL

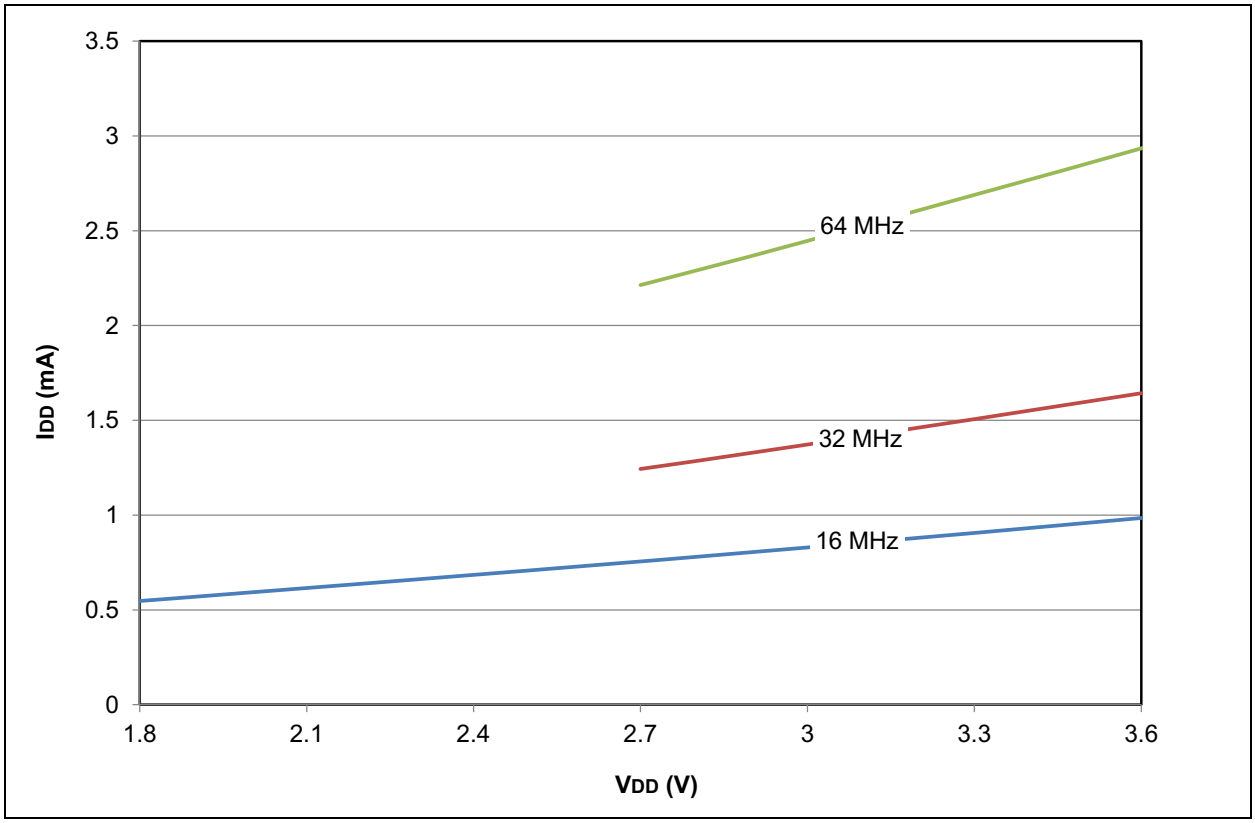

FIGURE 28-45: PIC18LF2X/4XK22 MAXIMUM IDD: RC_IDLE HF-INTOSC with PLL

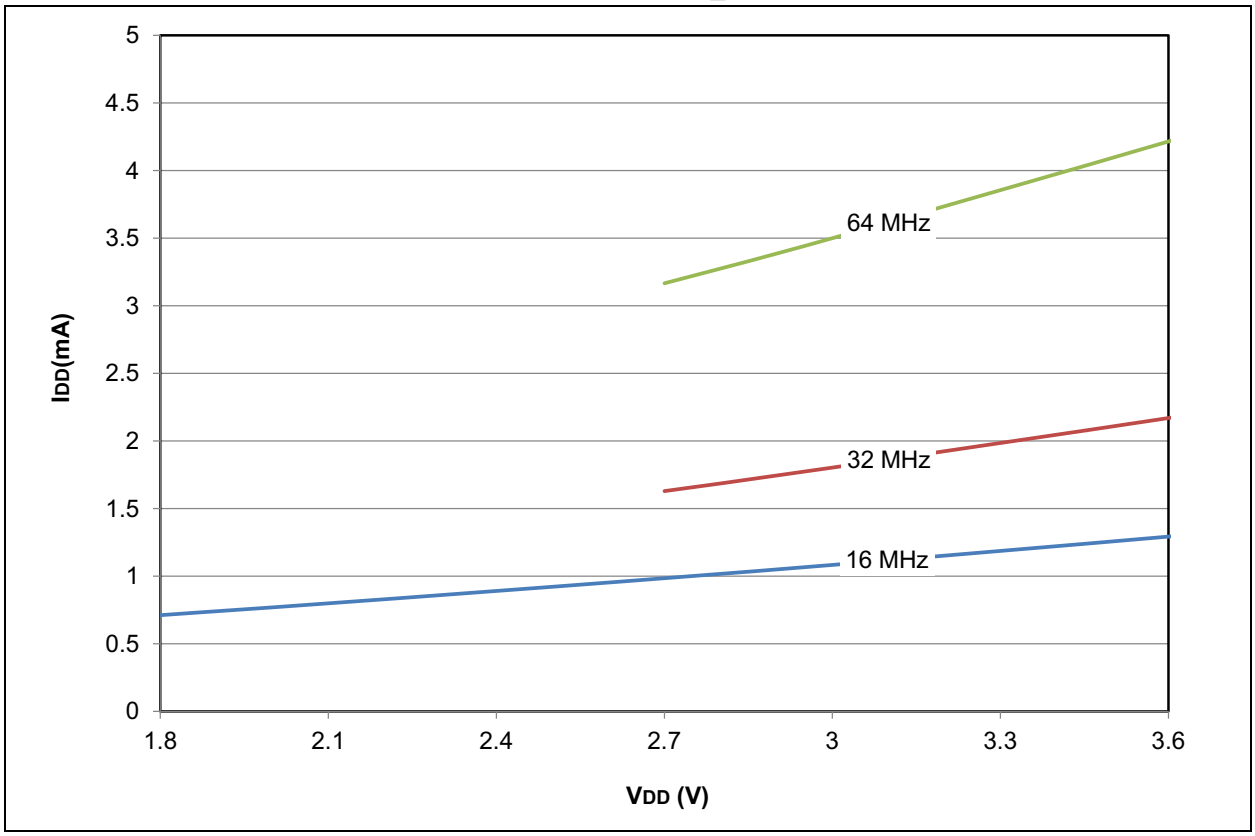

© 2010-2016 Microchip Technology Inc.

FIGURE 28-46: PIC18F2X/4XK22 TYPICAL IDD: RC_IDLE HF-INTOSC with PLL

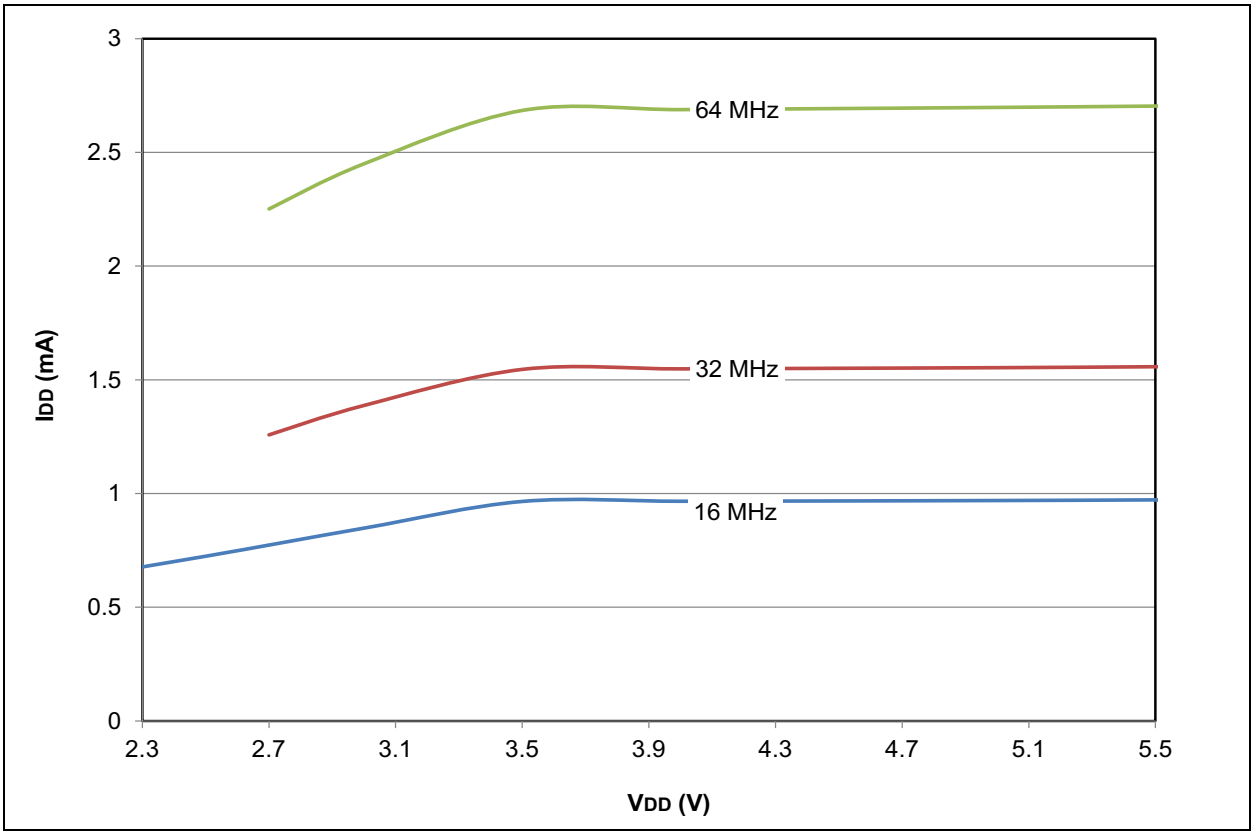

FIGURE 28-47: PIC18F2X/4XK22 MAXIMUM IDD: RC_IDLE HF-INTOSC with PLL

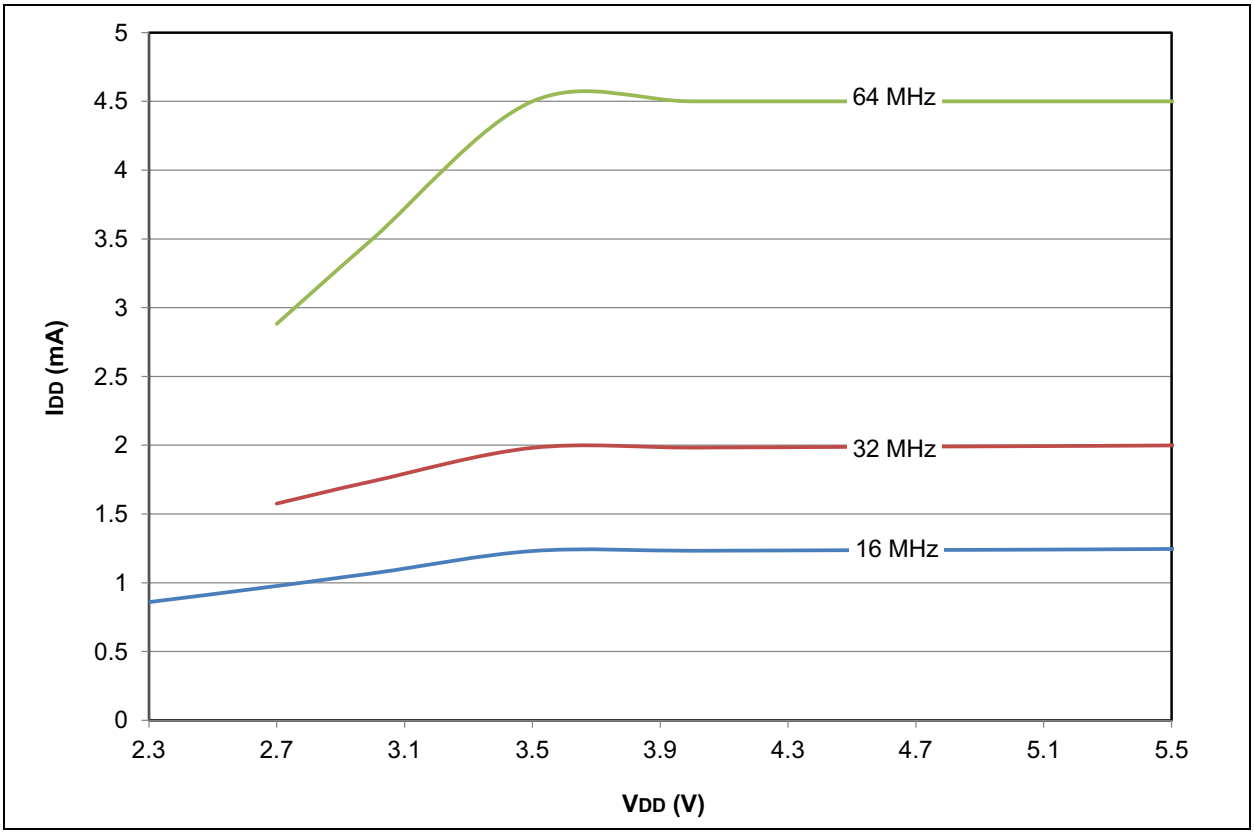

FIGURE 28-48: PIC18LF2X/4XK22 TYPICAL IDD: PRI_RUN EC MEDIUM POWER

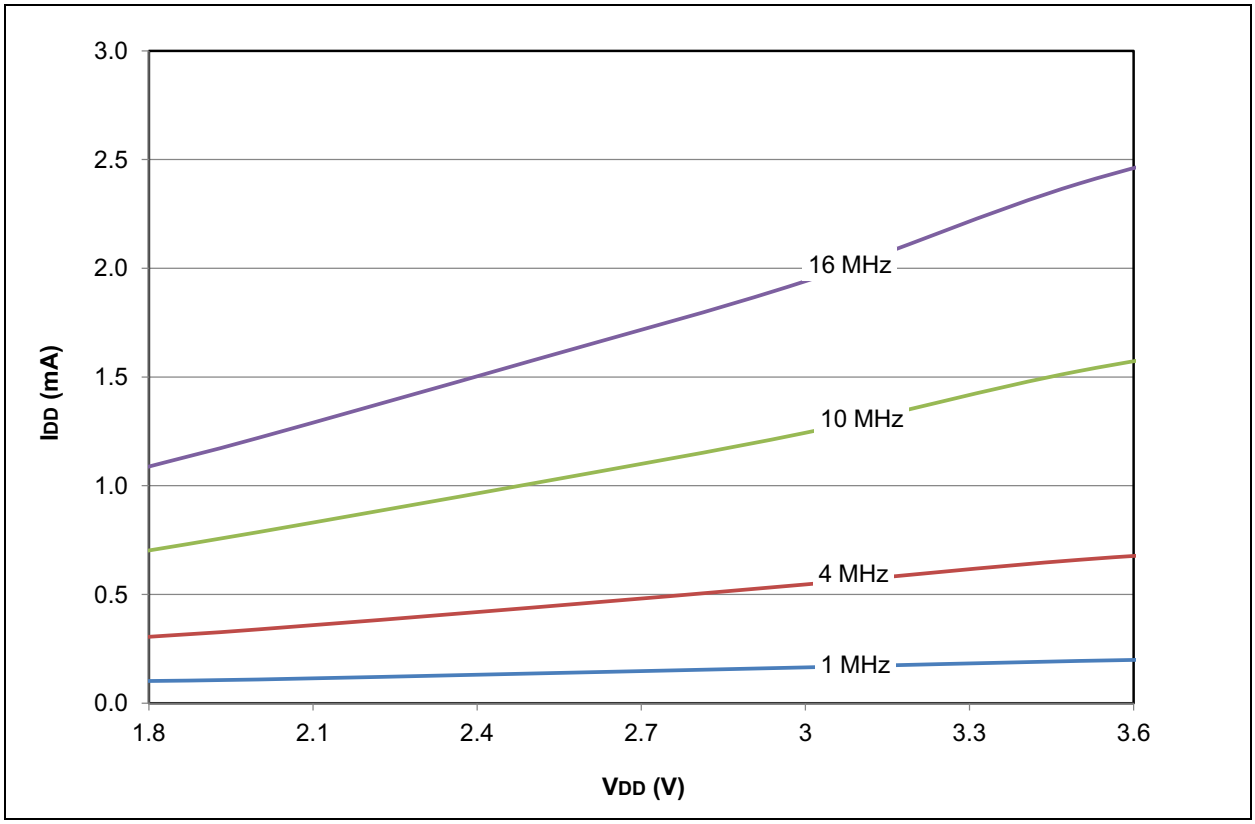

FIGURE 28-49: PIC18LF2X/4XK22 MAXIMUM IDD: PRI_RUN EC MEDIUM POWER

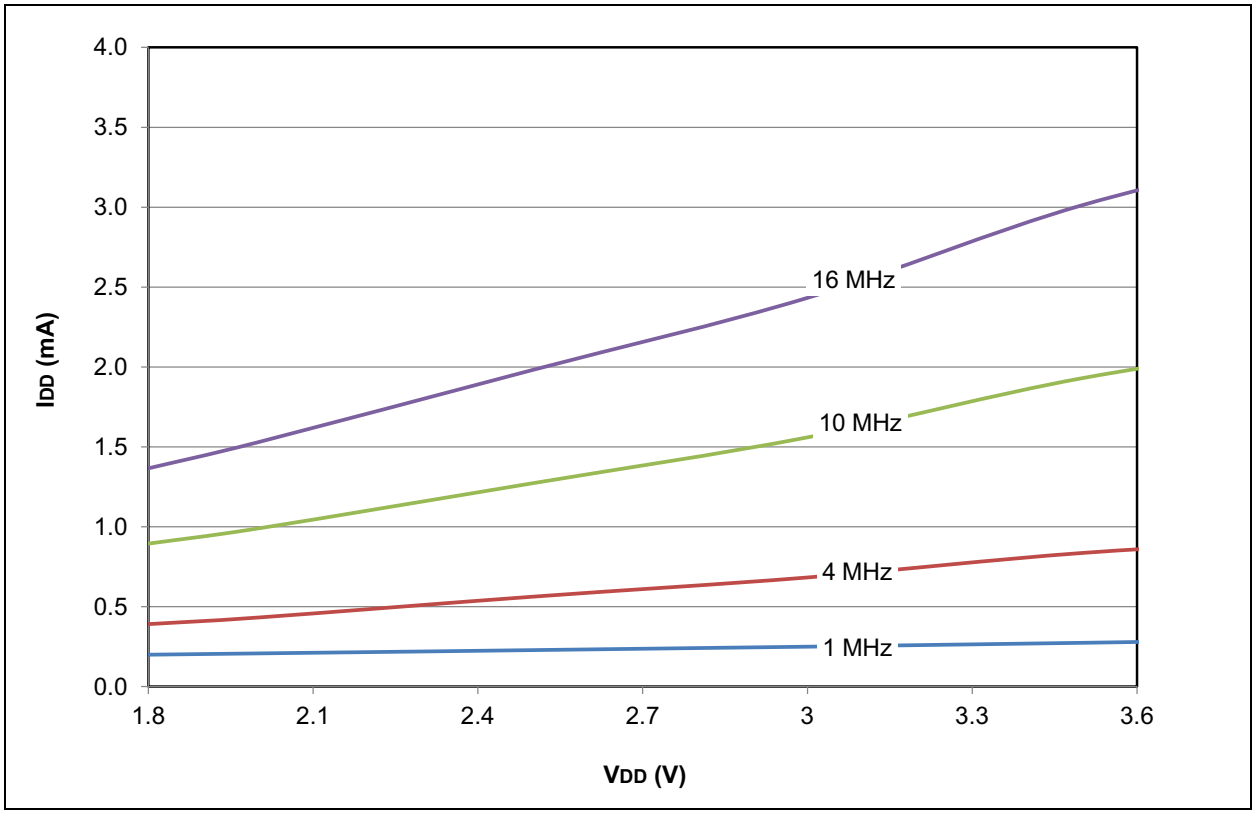

© 2010-2016 Microchip Technology Inc.

FIGURE 28-50: PIC18F2X/4XK22 TYPICAL IDD: PRI_RUN EC MEDIUM POWER

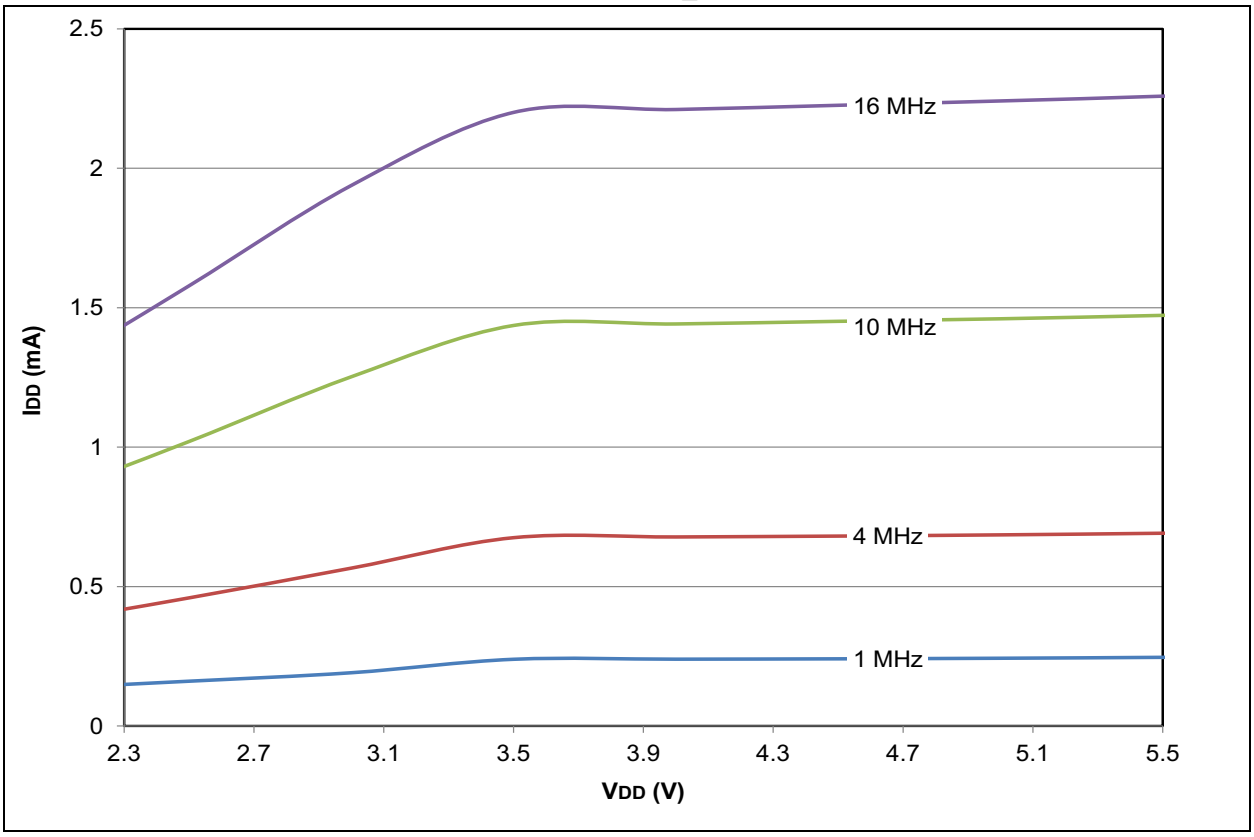

FIGURE 28-51: PIC18F2X/4XK22 MAXIMUM IDD: PRI_RUN EC MEDIUM POWER

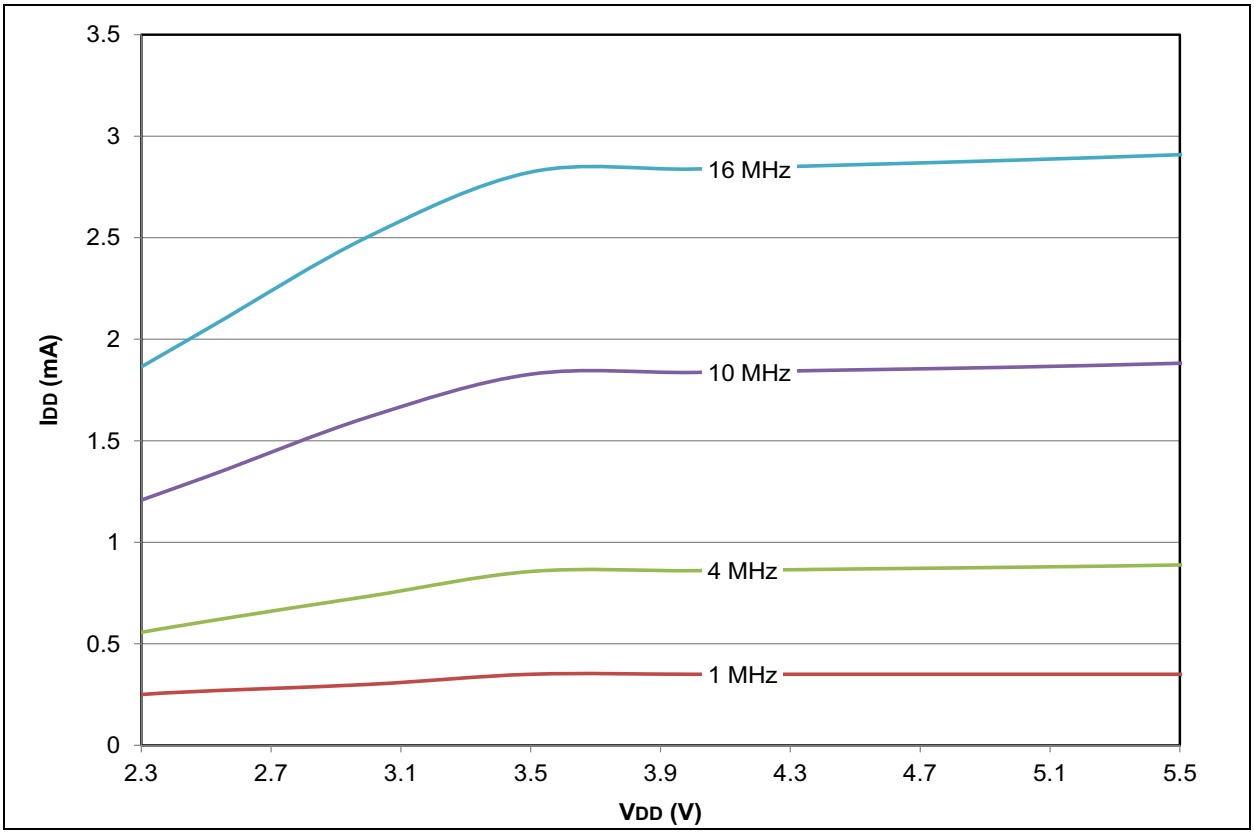

FIGURE 28-52: PIC18LF2X/4XK22 TYPICAL IDD: PRI_RUN EC HIGH POWER

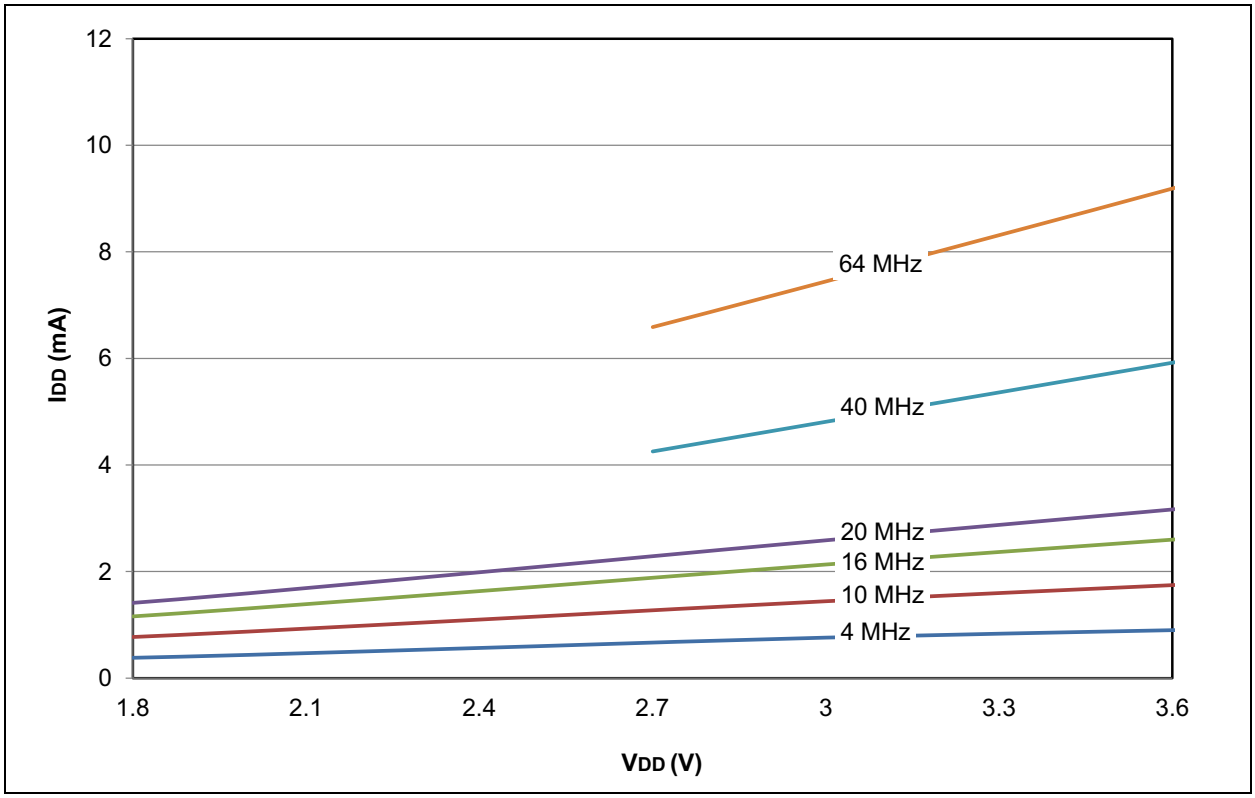

FIGURE 28-53: PIC18LF2X/4XK22 MAXIMUM IDD: PRI_RUN EC HIGH POWER

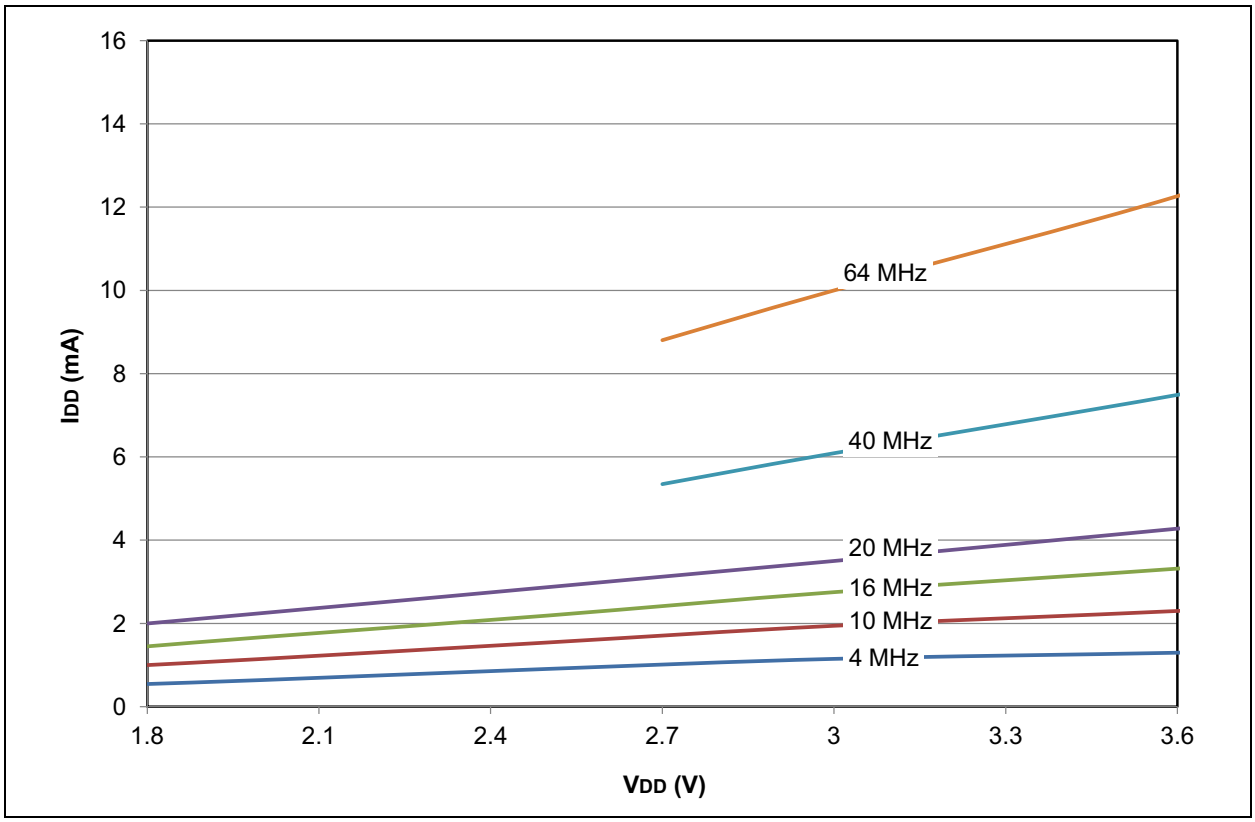

© 2010-2016 Microchip Technology Inc.

FIGURE 28-54: PIC18F2X/4XK22 TYPICAL IDD: PRI_RUN EC HIGH POWER

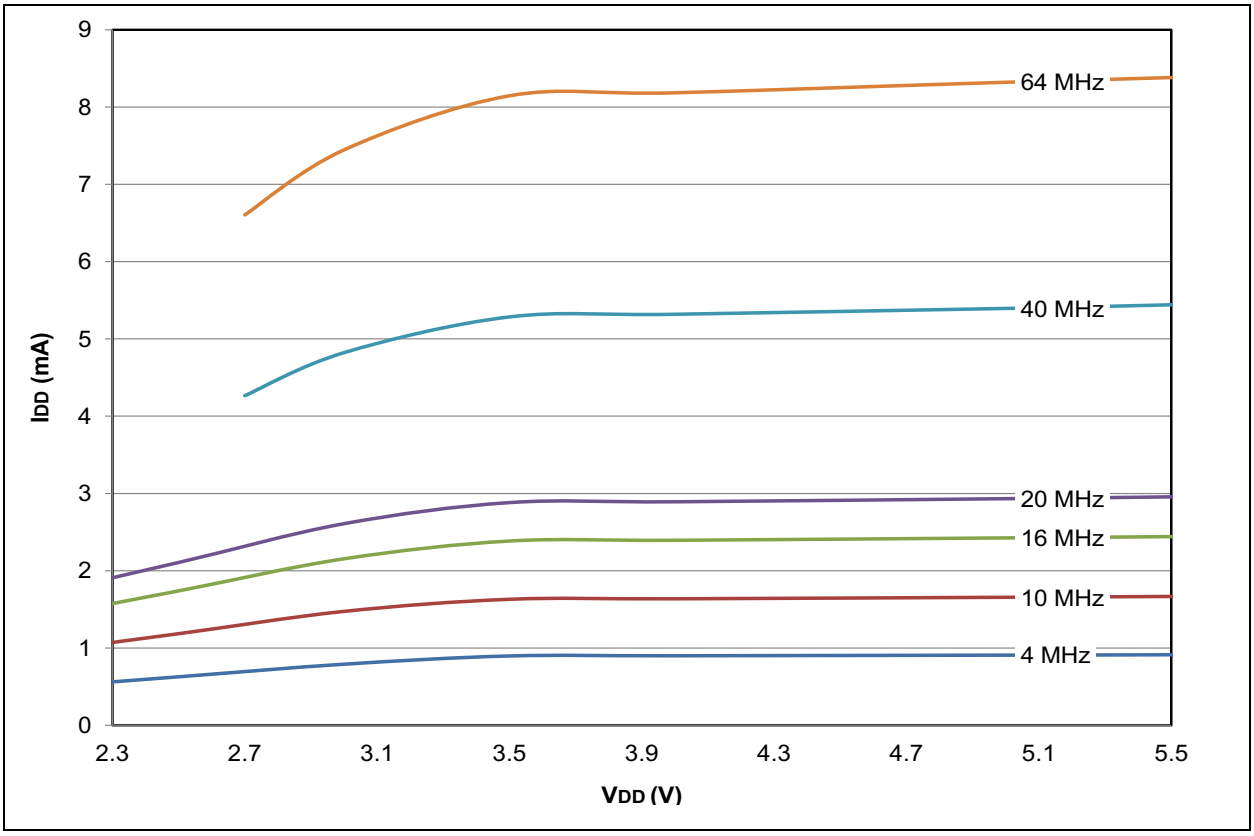

FIGURE 28-55: PIC18F2X/4XK22 MAXIMUM IDD: PRI_RUN EC HIGH POWER

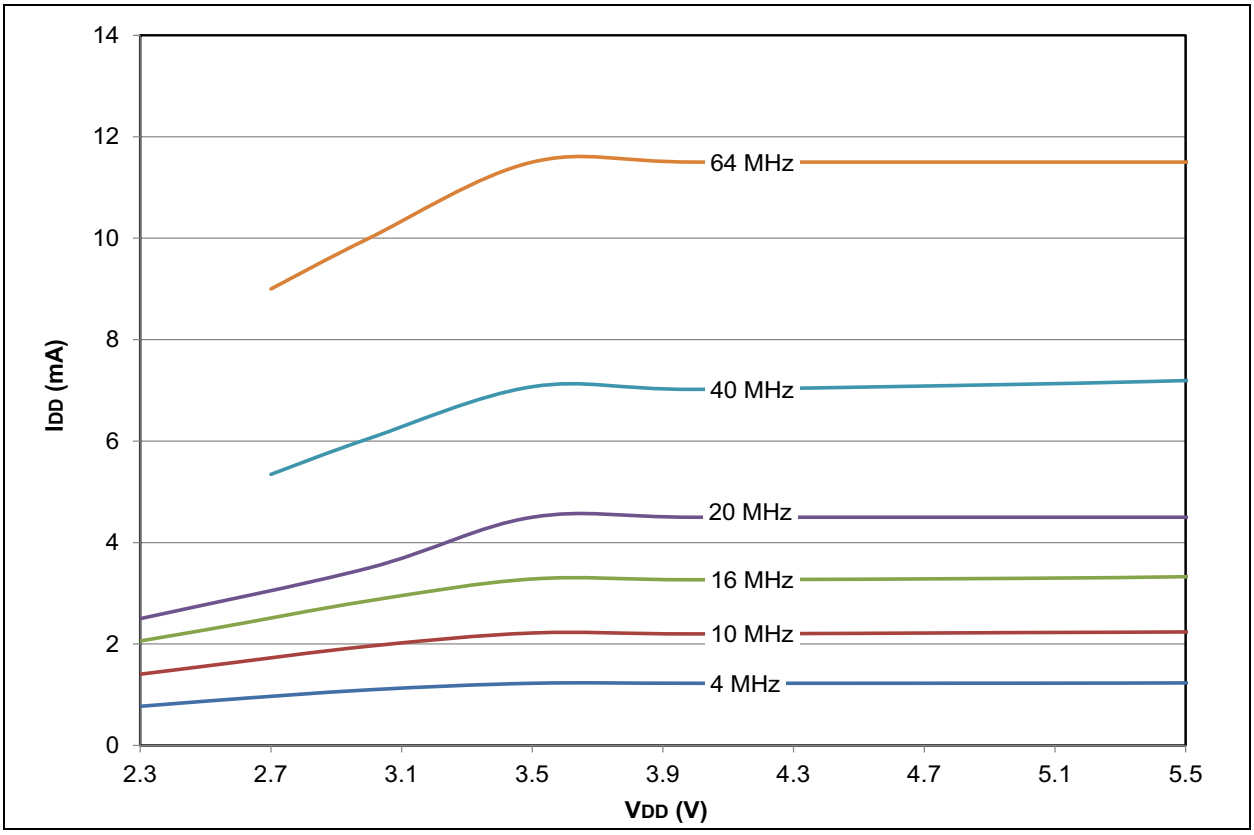

FIGURE 28-56: PIC18LF2X/4XK22 TYPICAL IDD: PRI_RUN EC with PLL

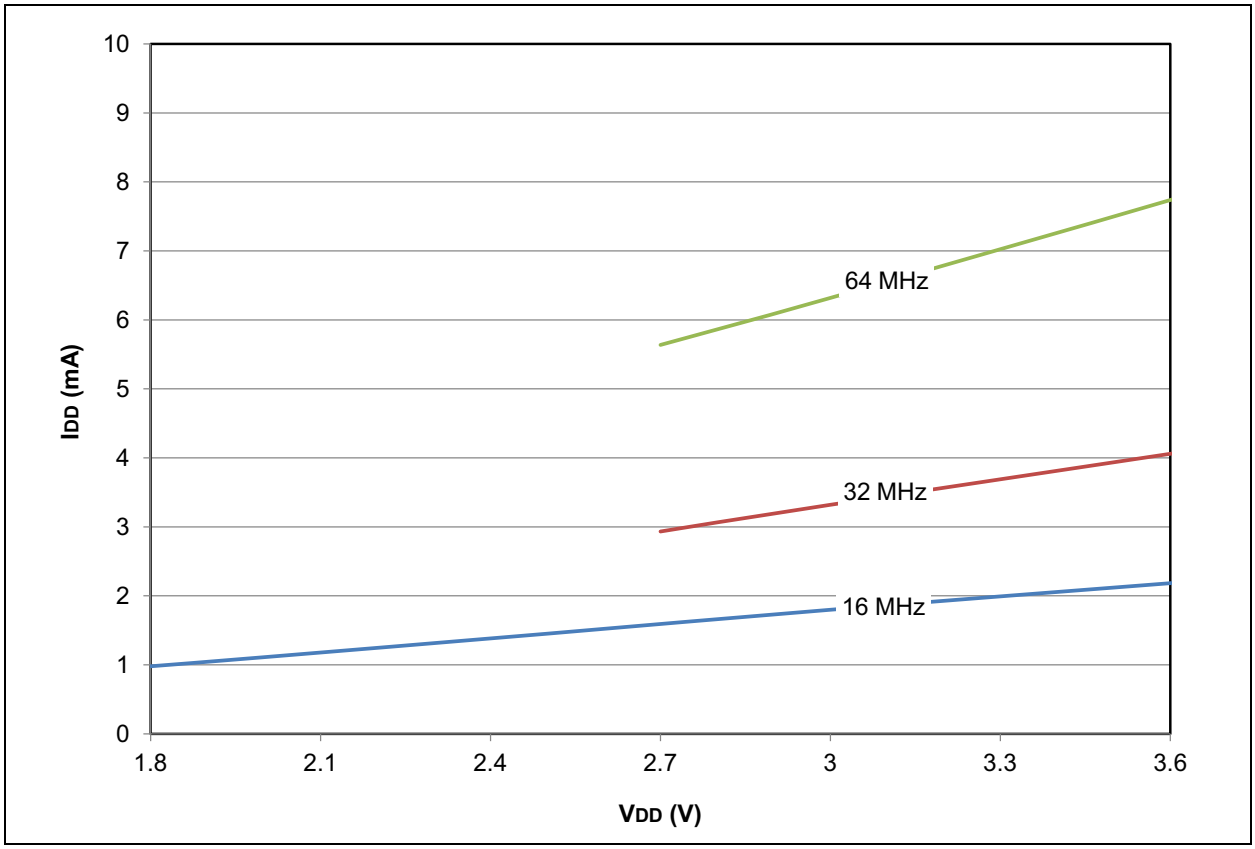

FIGURE 28-57: PIC18LF2X/4XK22 MAXIMIUM IDD: PRI_RUN EC with PLL

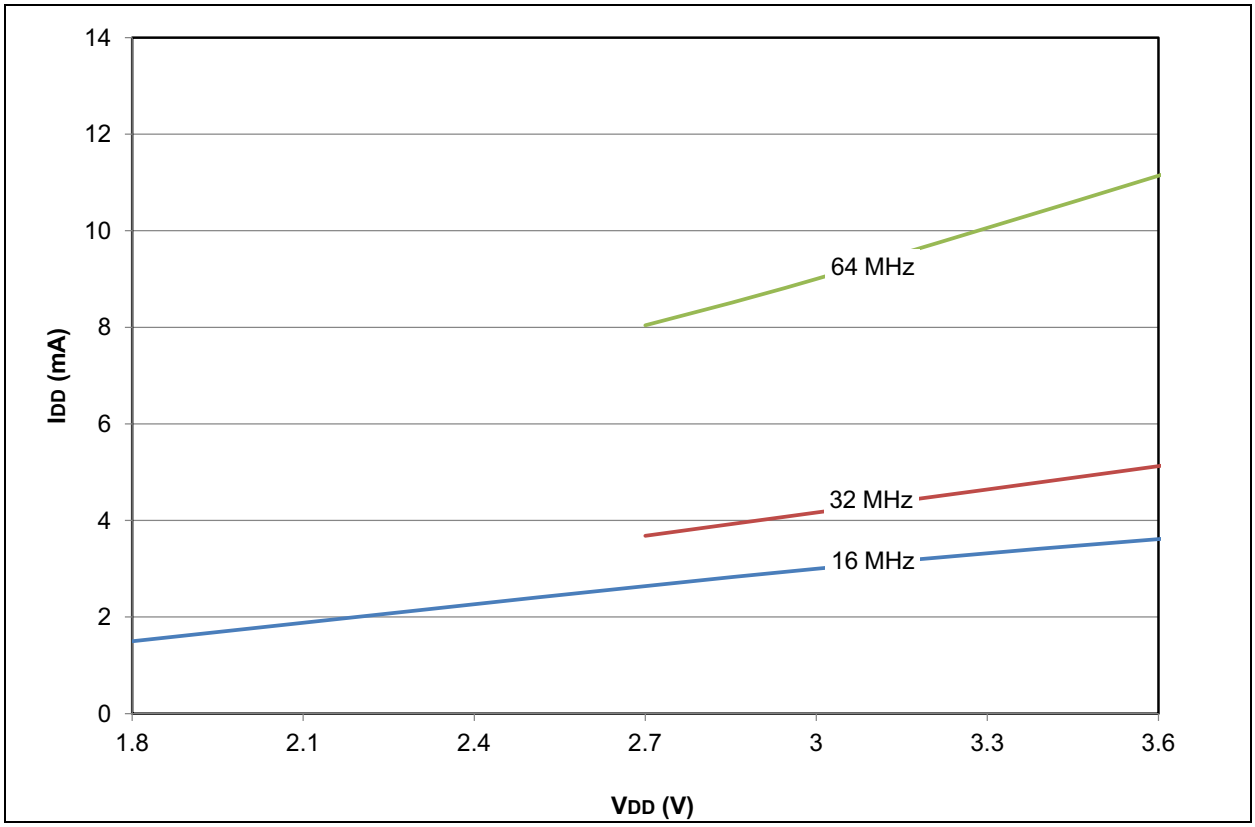

© 2010-2016 Microchip Technology Inc.

FIGURE 28-58: PIC18F2X/4XK22 TYPICAL IDD: PRI_RUN EC with PLL

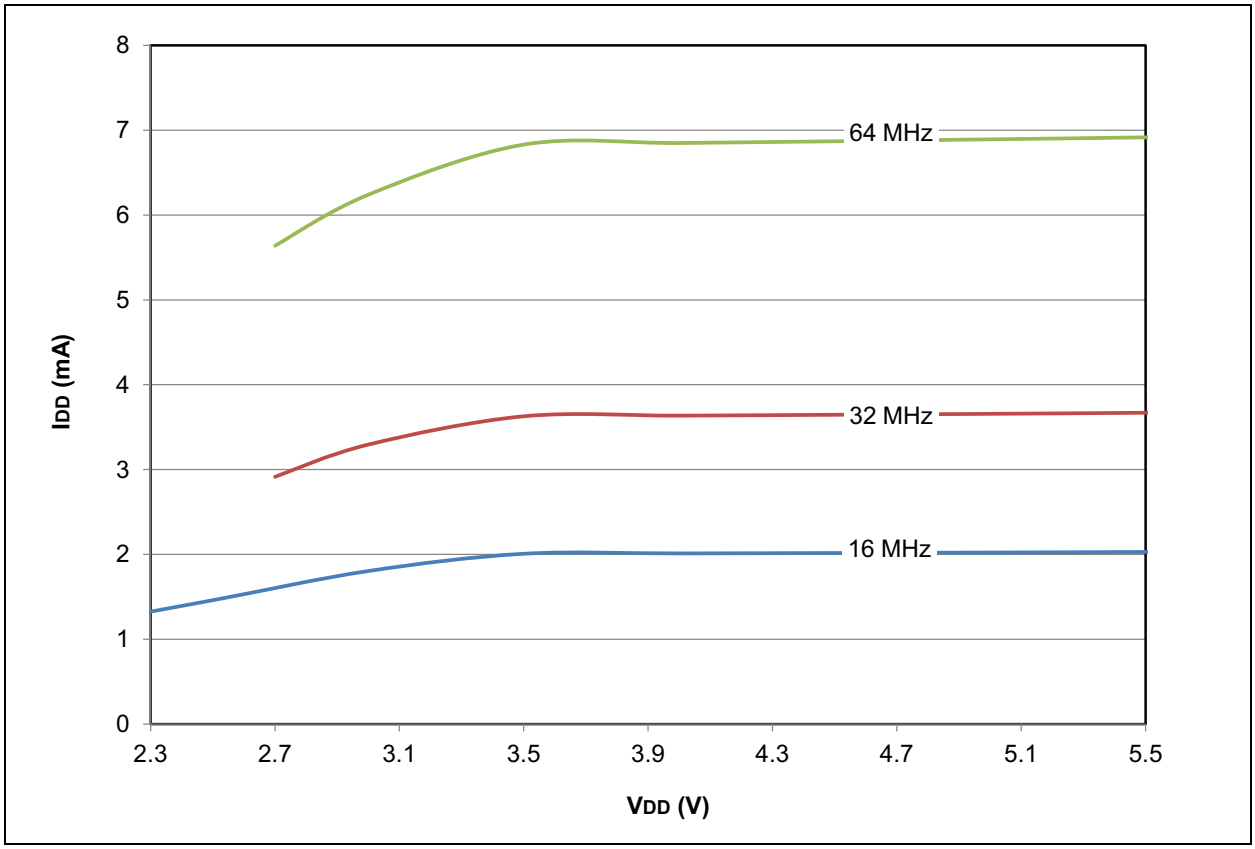

FIGURE 28-59: PIC18F2X/4XK22 MAXIMUM IDD: PRI_RUN EC with PLL

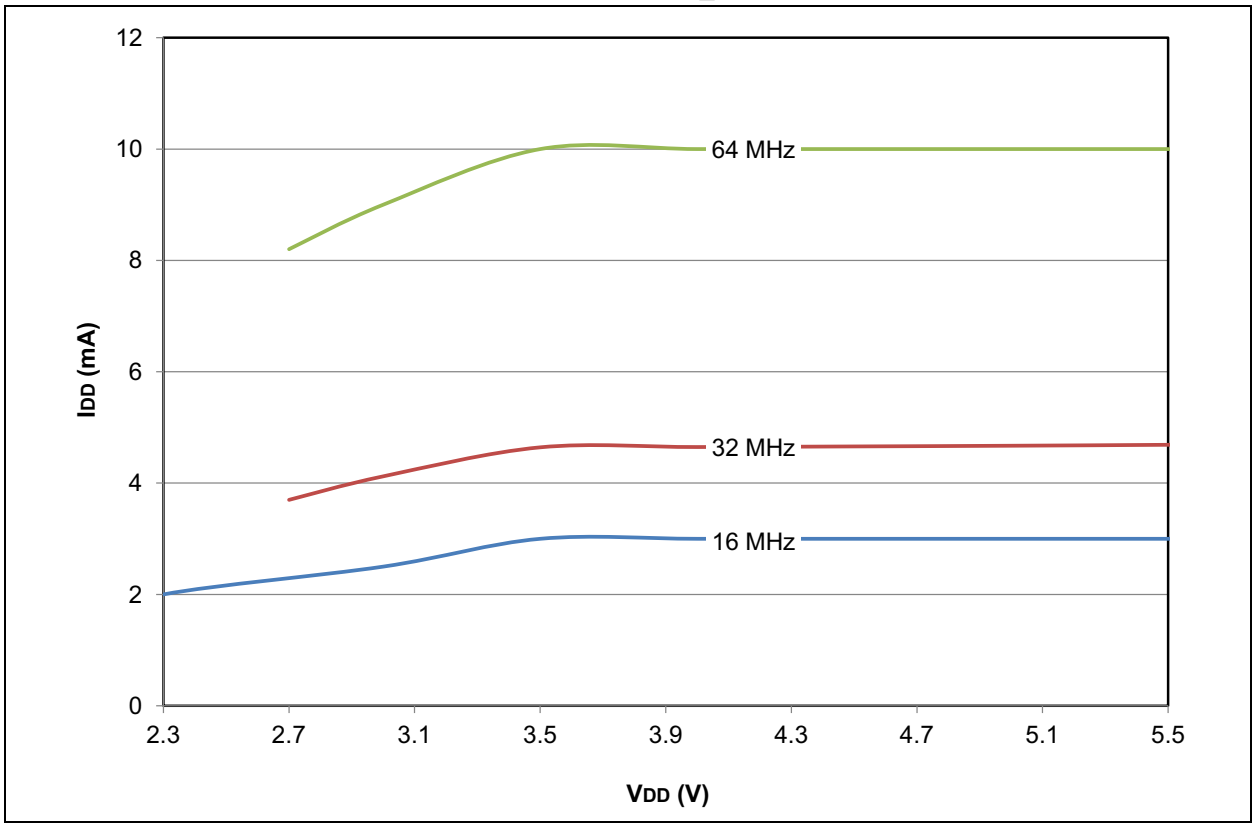

FIGURE 28-60: PIC18LF2X/4XK22 TYPICAL IDD: PRI_IDLE EC MEDIUM POWER

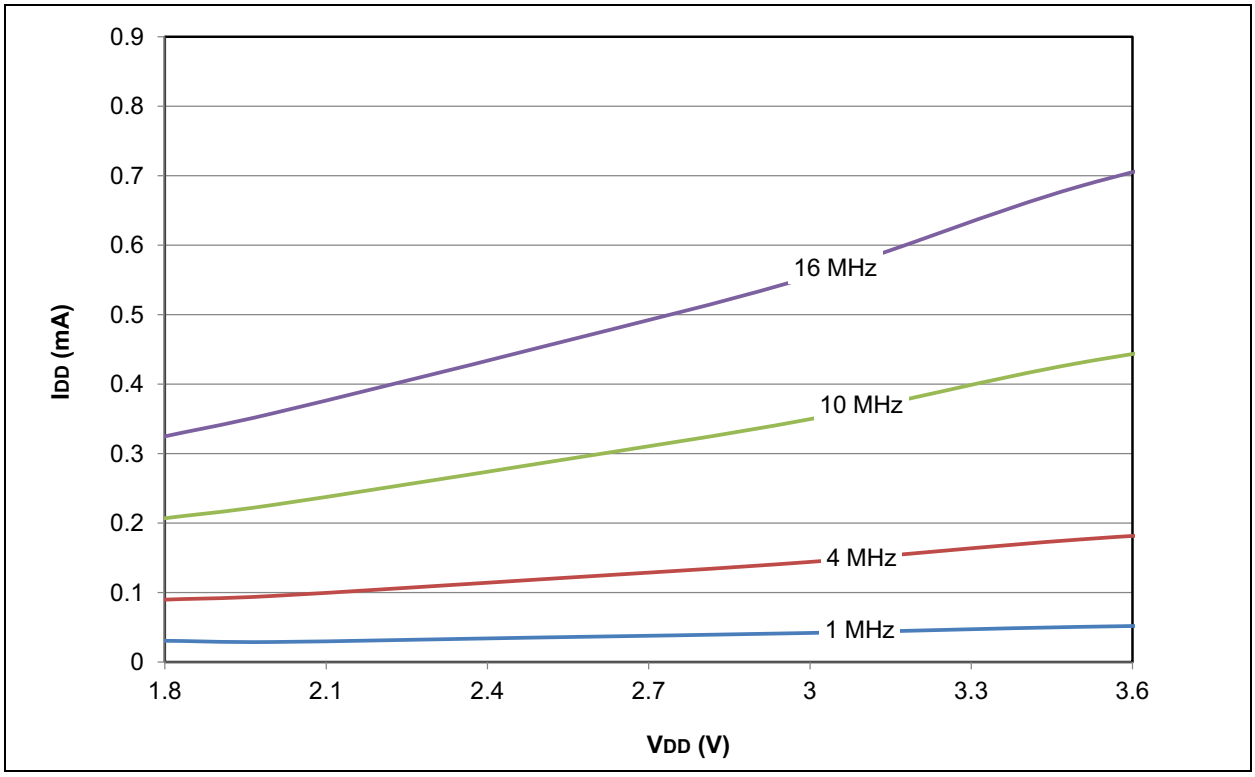

FIGURE 28-61: PIC18LF2X/4XK22 MAXIMUM IDD: PRI_IDLE EC MEDIUM POWER

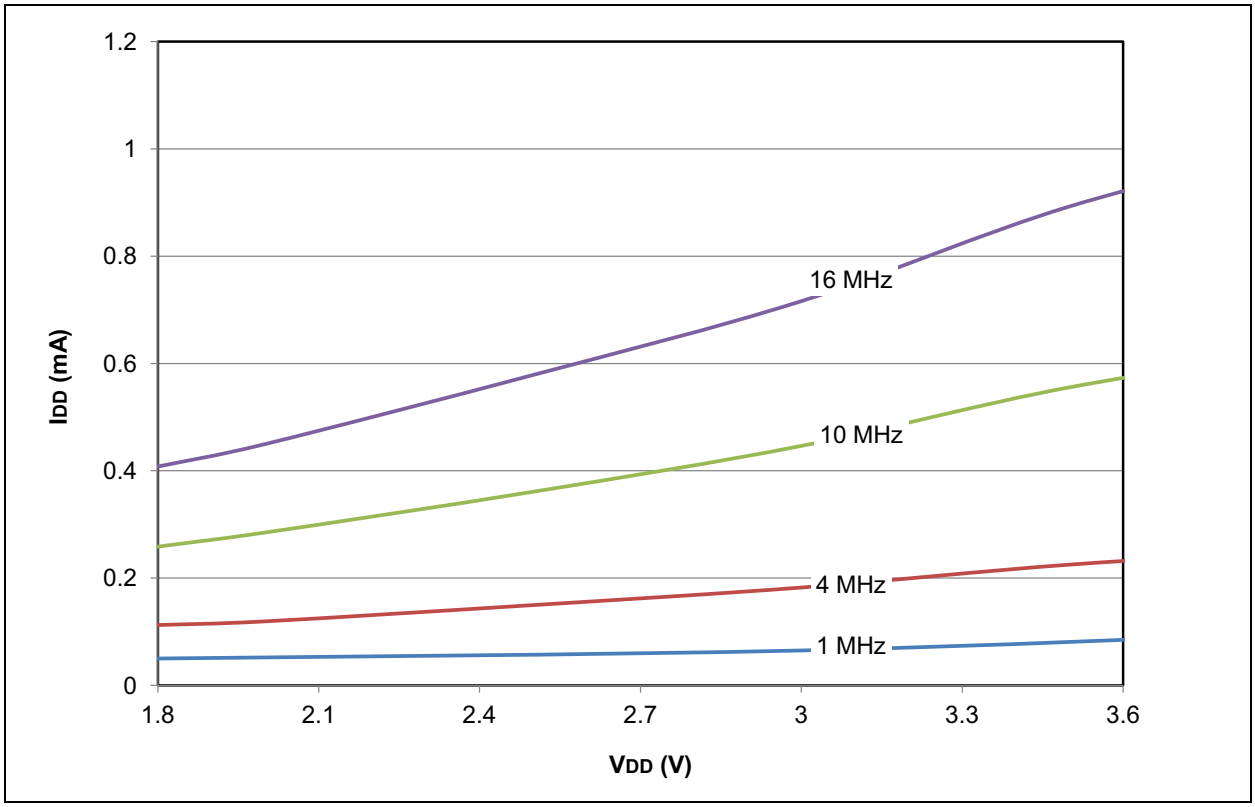

© 2010-2016 Microchip Technology Inc.

FIGURE 28-62: PIC18F2X/4XK22 TYPICAL IDD: PRI_IDLE EC MEDIUM POWER

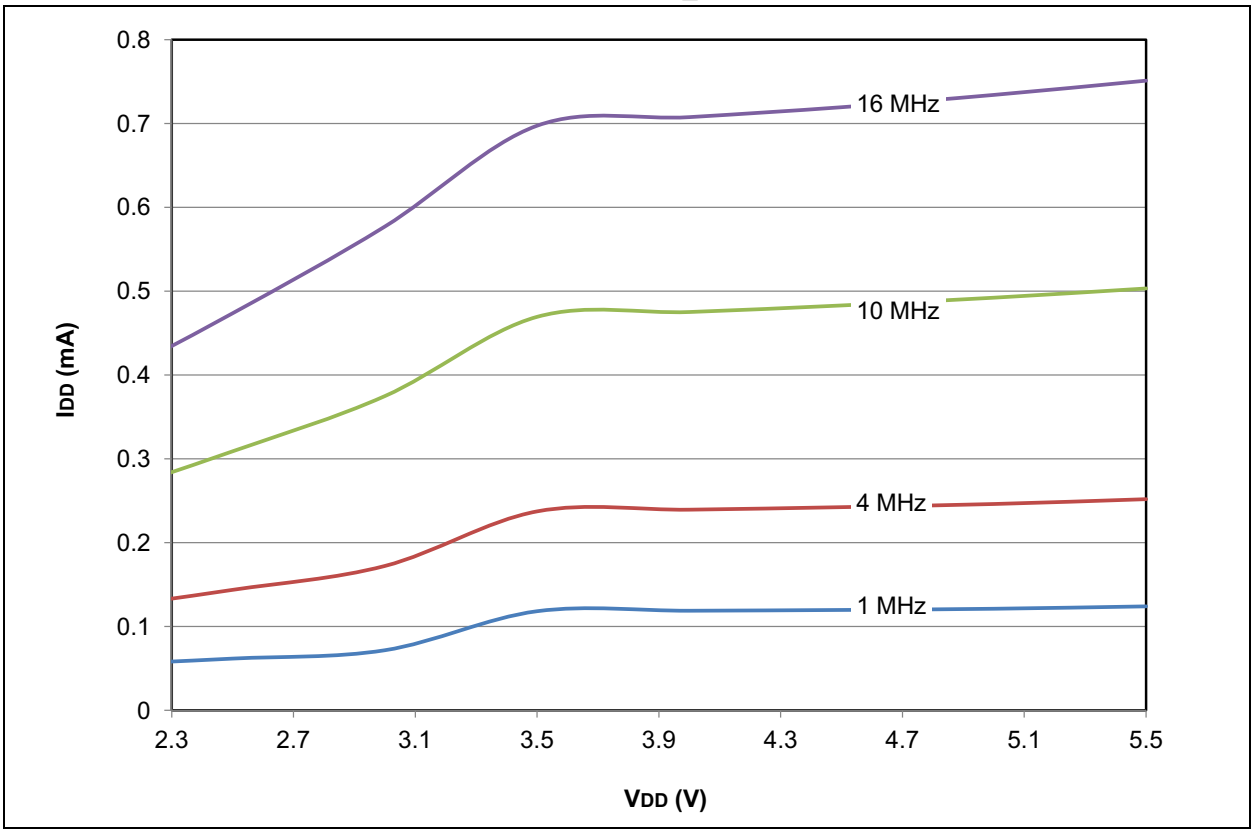

FIGURE 28-63: PIC18F2X/4XK22 MAXIMUM IDD: PRI_IDLE EC MEDIUM POWER

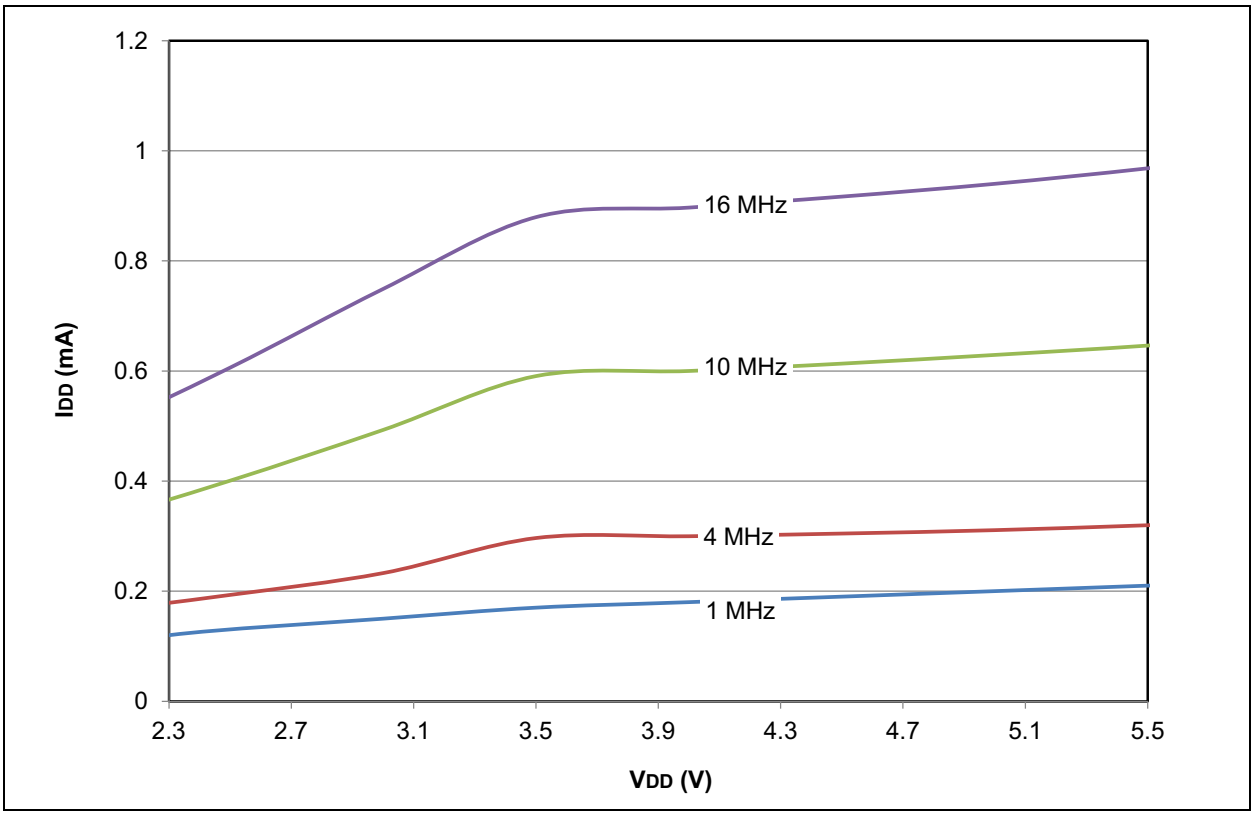

FIGURE 28-64: PIC18LF2X/4XK22 TYPICAL IDD: PRI_IDLE EC HIGH POWER

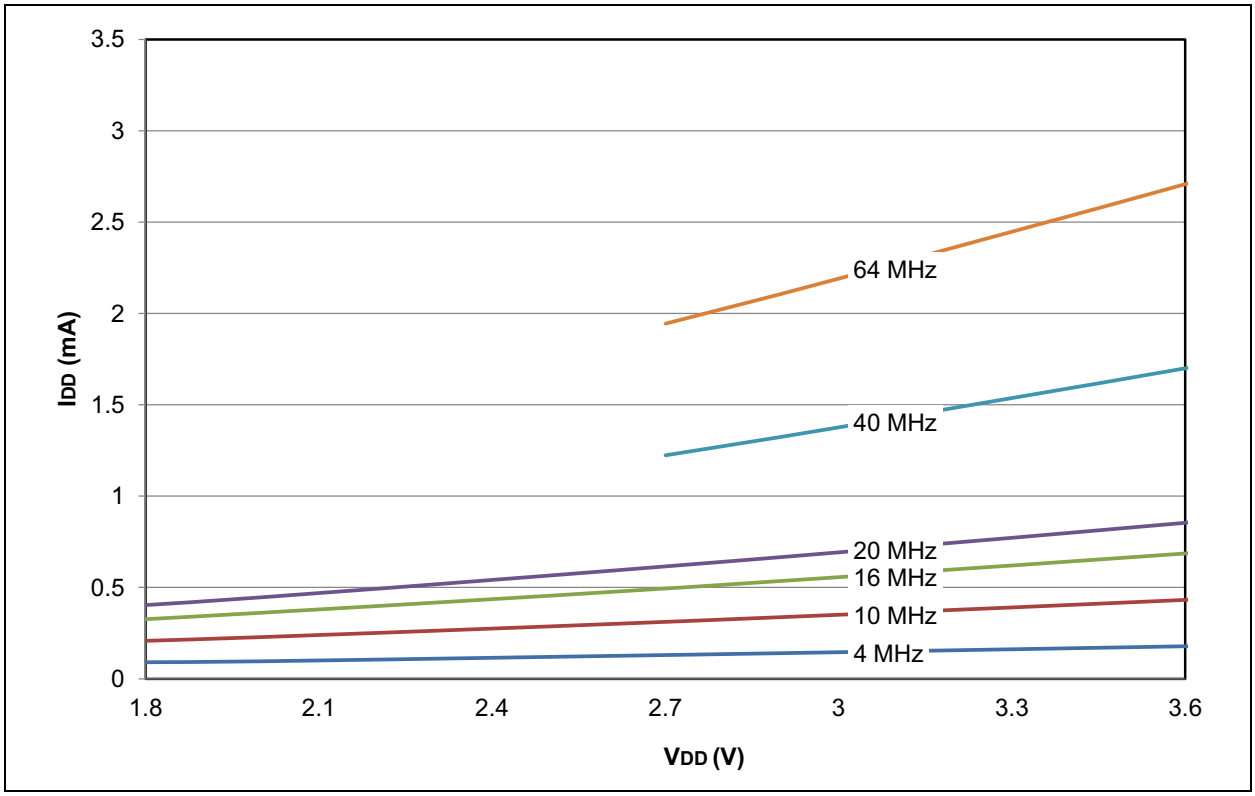

FIGURE 28-65: PIC18LF2X/4XK22 MAXIMUM IDD: PRI_IDLE EC HIGH POWER

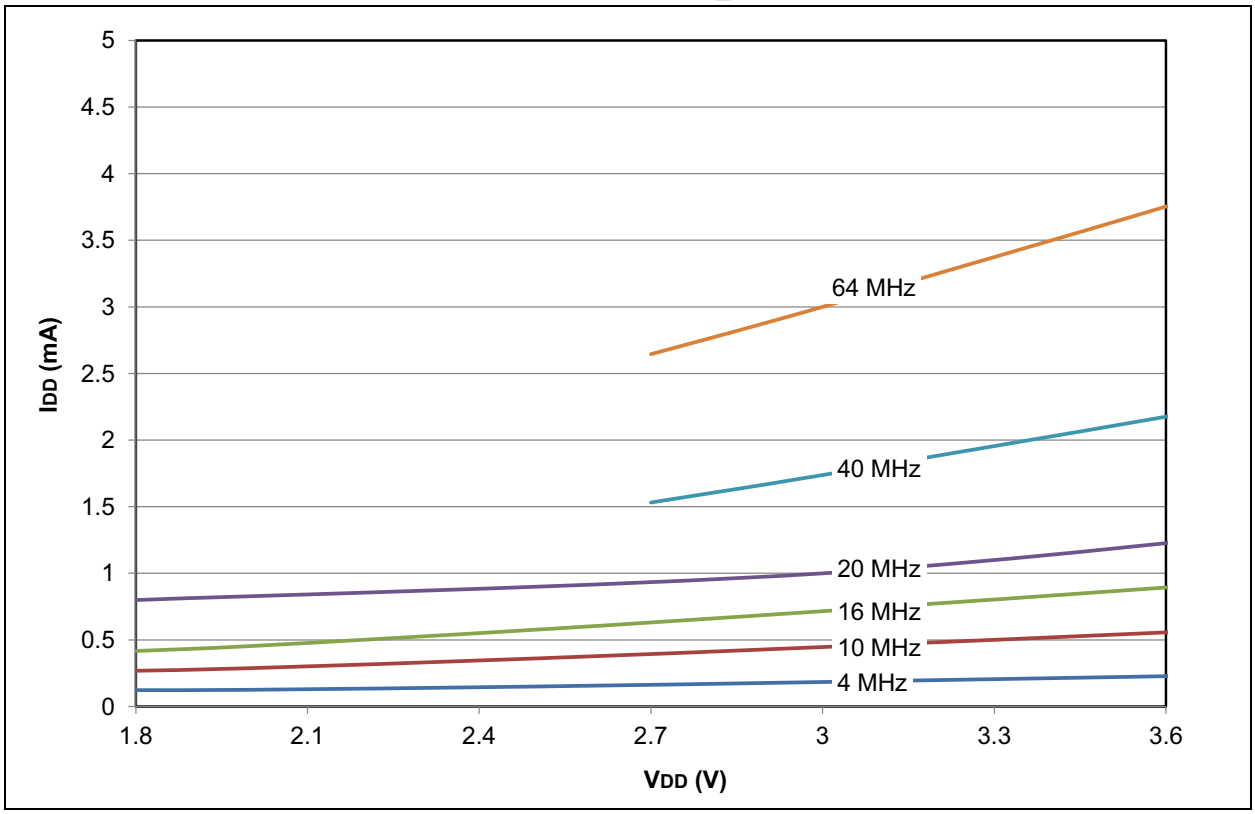

© 2010-2016 Microchip Technology Inc.

FIGURE 28-66: PIC18F2X/4XK22 TYPICAL IDD: PRI_IDLE EC HIGH POWER

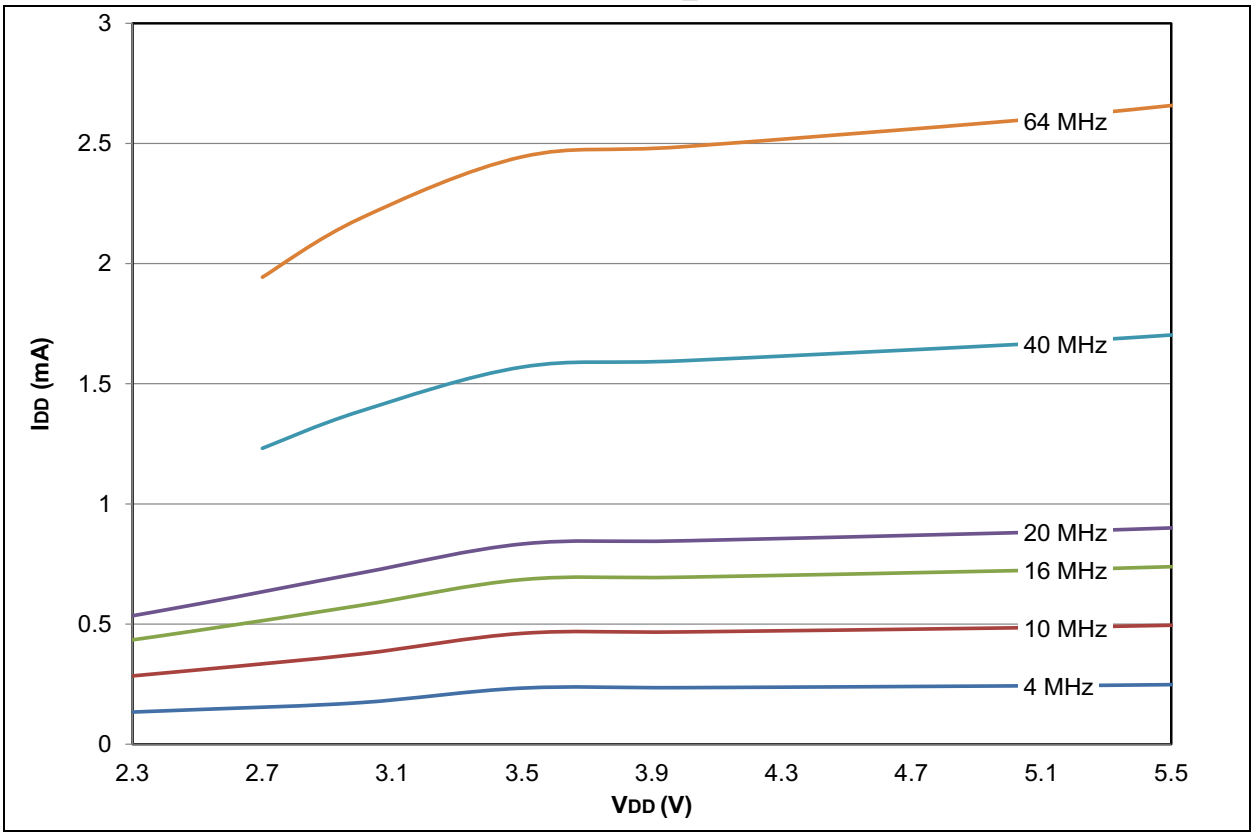

FIGURE 28-67: PIC18F2X/4XK22 MAXIMUM IDD: PRI_IDLE EC HIGH POWER

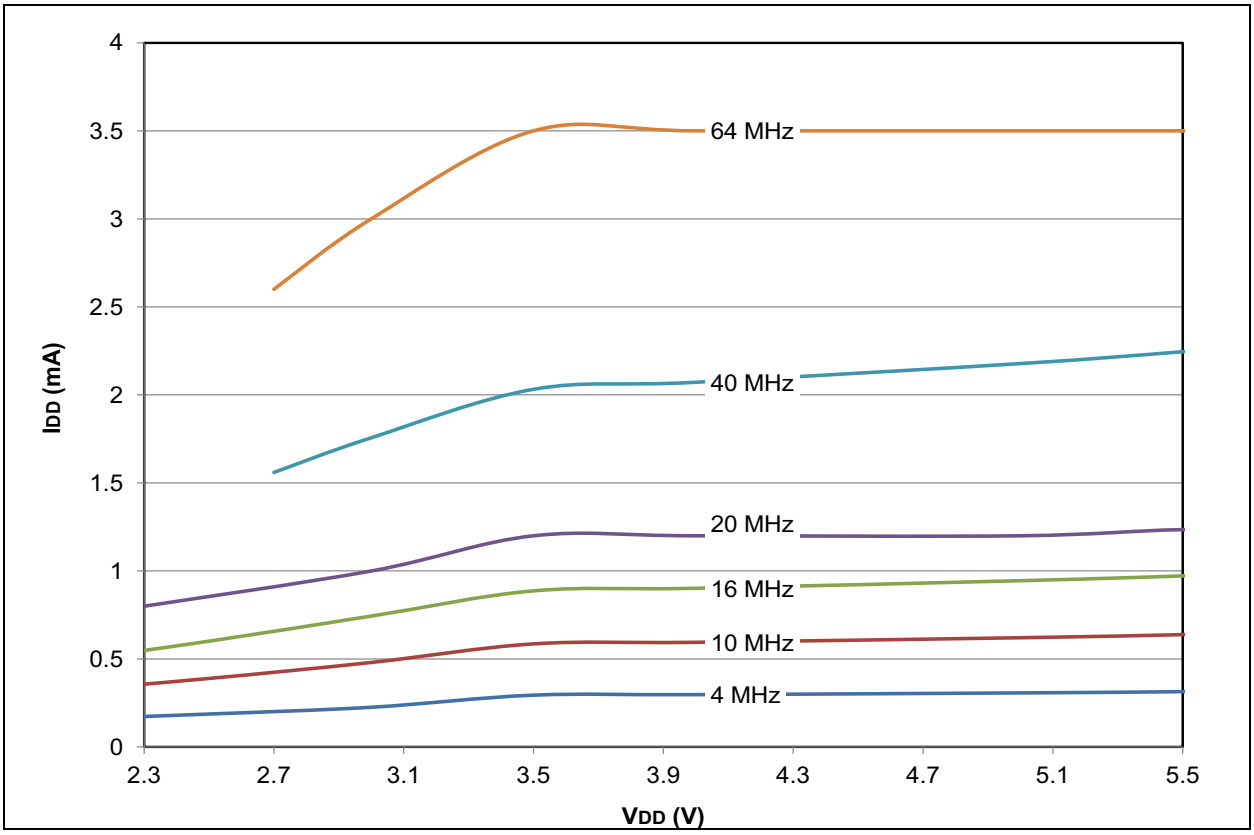

FIGURE 28-68: PIC18LF2X/4XK22 TYPICAL IDD: PRI_IDLE EC with PLL

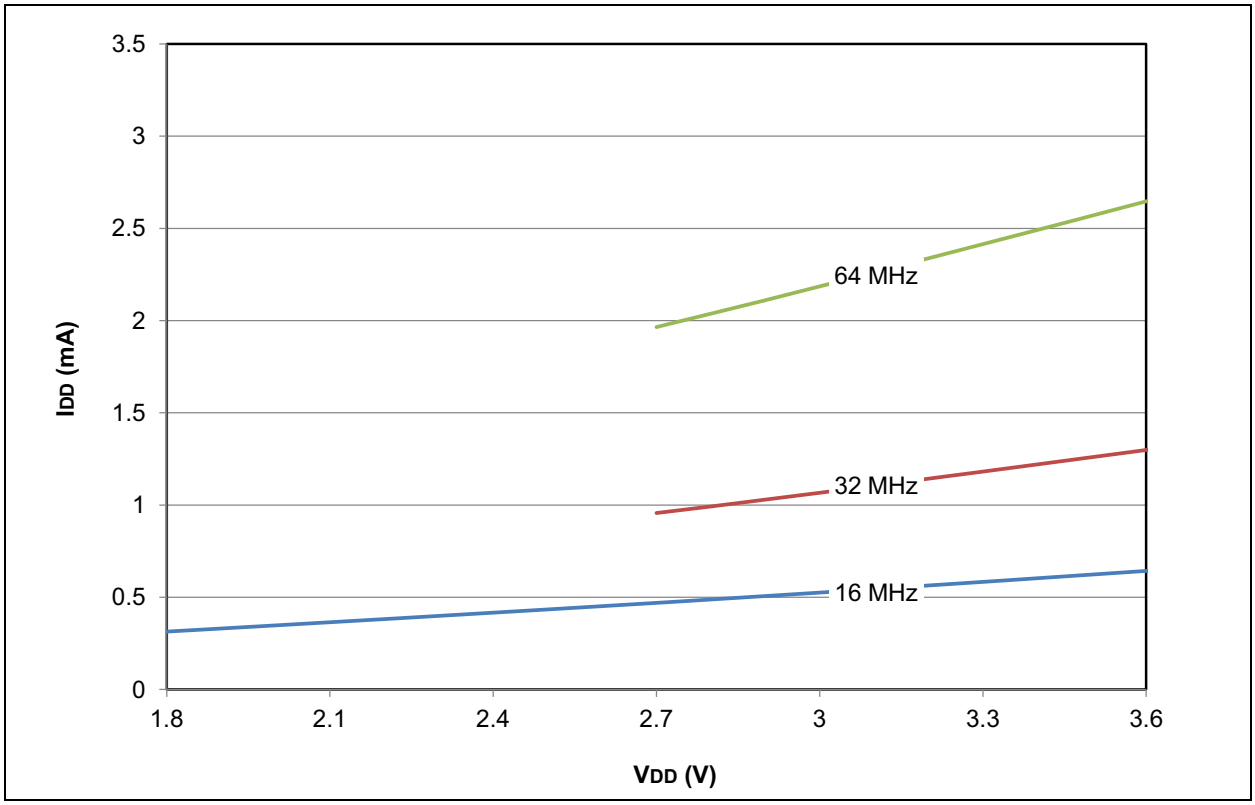

FIGURE 28-69: PIC18LF2X/4XK22 MAXIMUM IDD: PRI_IDLE EC with PLL

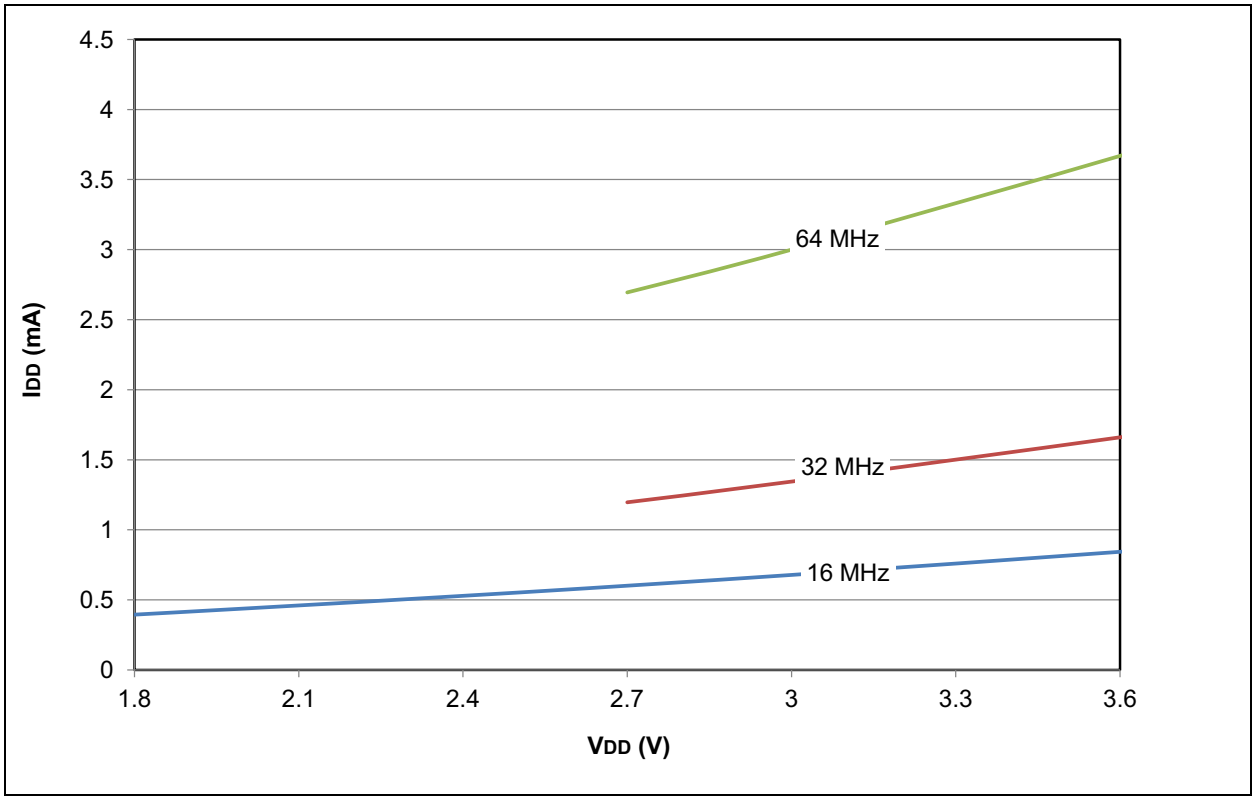

© 2010-2016 Microchip Technology Inc.

FIGURE 28-70: PIC18F2X/4XK22 TYPICAL IDD: PRI_IDLE EC with PLL

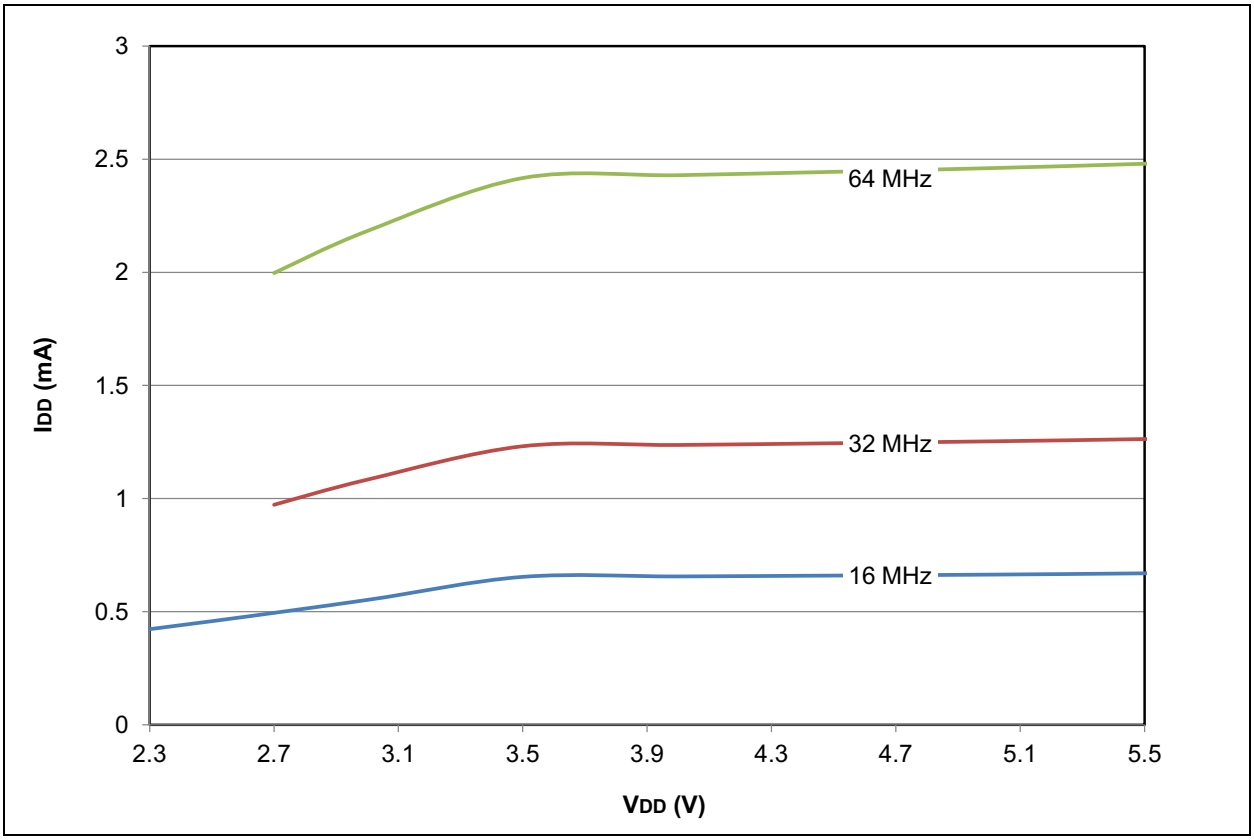

FIGURE 28-71: PIC18F2X/4XK22 MAXIMUM IDD: PRI_IDLE EC with PLL

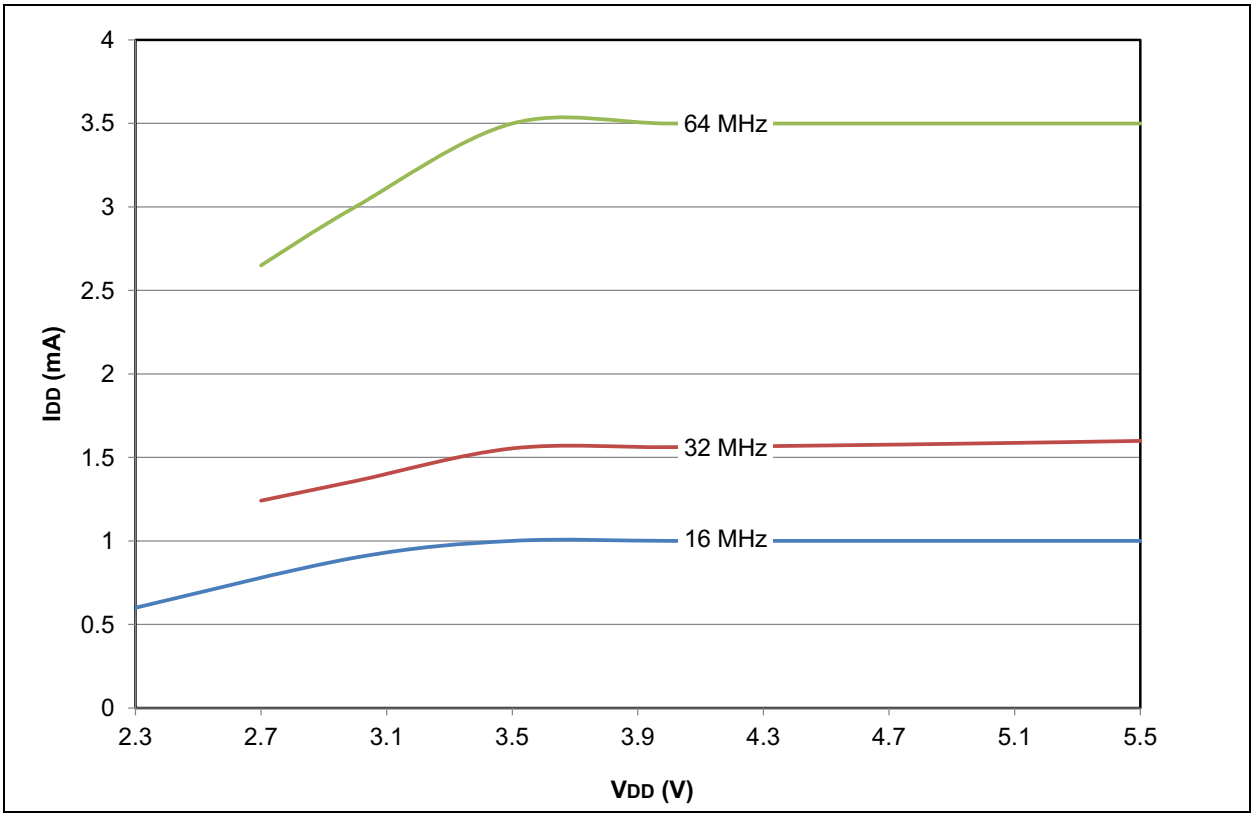

FIGURE 28-72: PIC18LF2X/4XK22 TYPICAL IDD: SEC_RUN 32.768 kHz

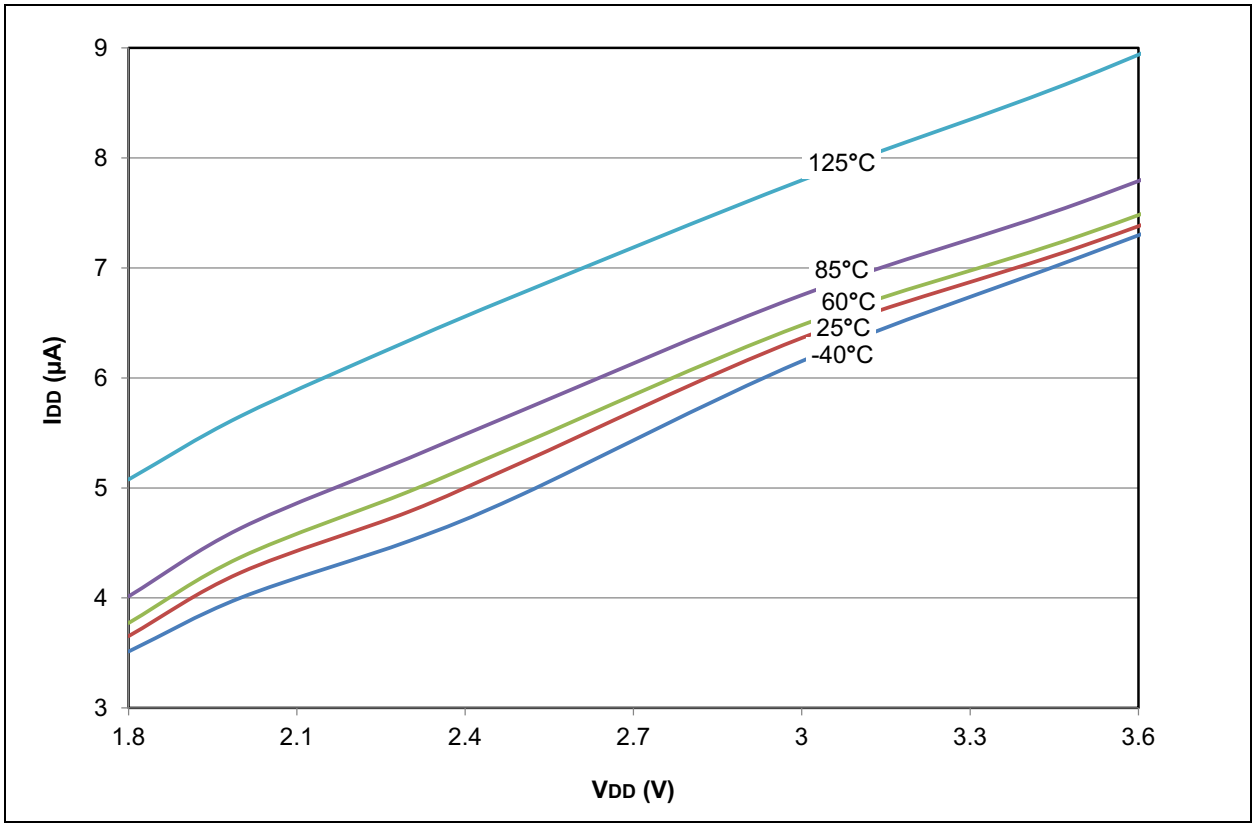

FIGURE 28-73: PIC18LF2X/4XK22 MAXIMUM IDD: SEC_RUN 32.768 kHz

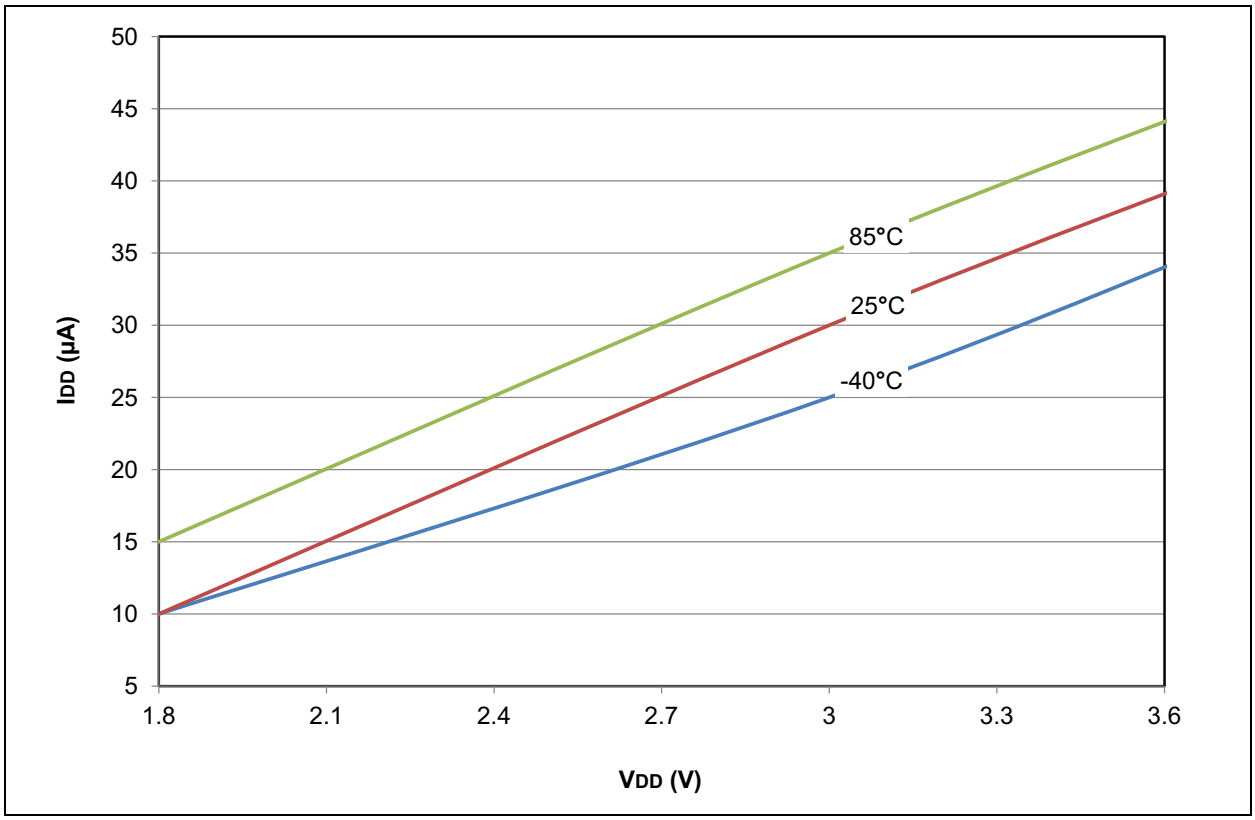

© 2010-2016 Microchip Technology Inc.

FIGURE 28-74: PIC18F2X/4XK22 TYPICAL IDD: SEC_RUN 32.768 kHz

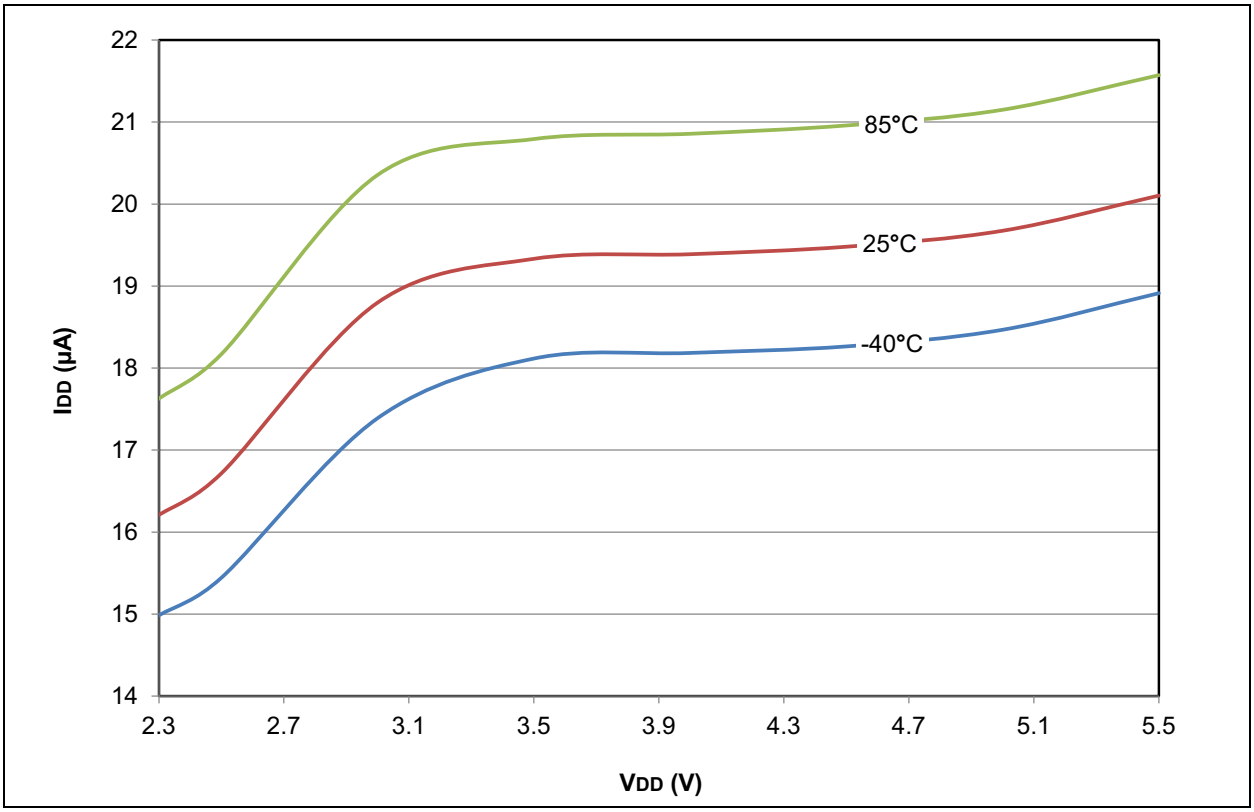

FIGURE 28-75: PIC18F2X/4XK22 MAXIMUM IDD: SEC_RUN 32.768 kHz

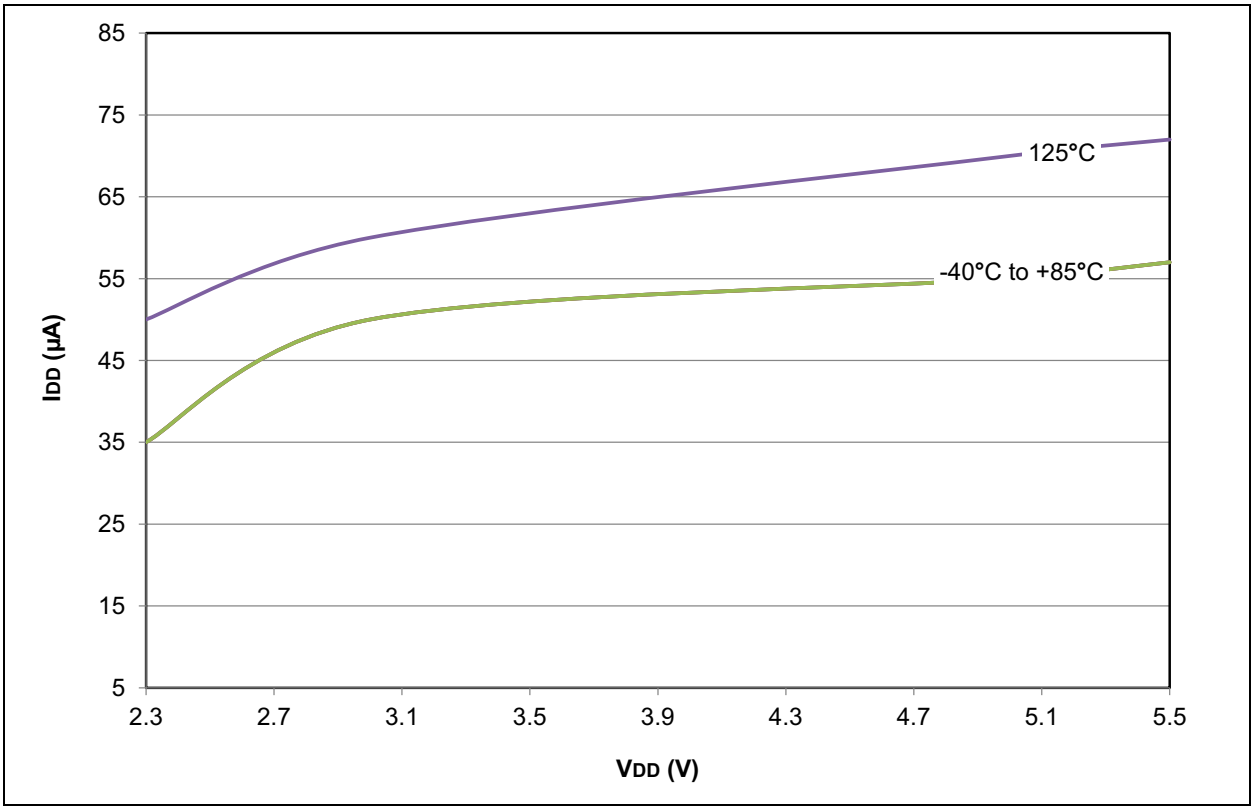

FIGURE 28-76: PIC18LF2X/4XK22 TYPICAL IDD: SEC_IDLE 32.768 kHz

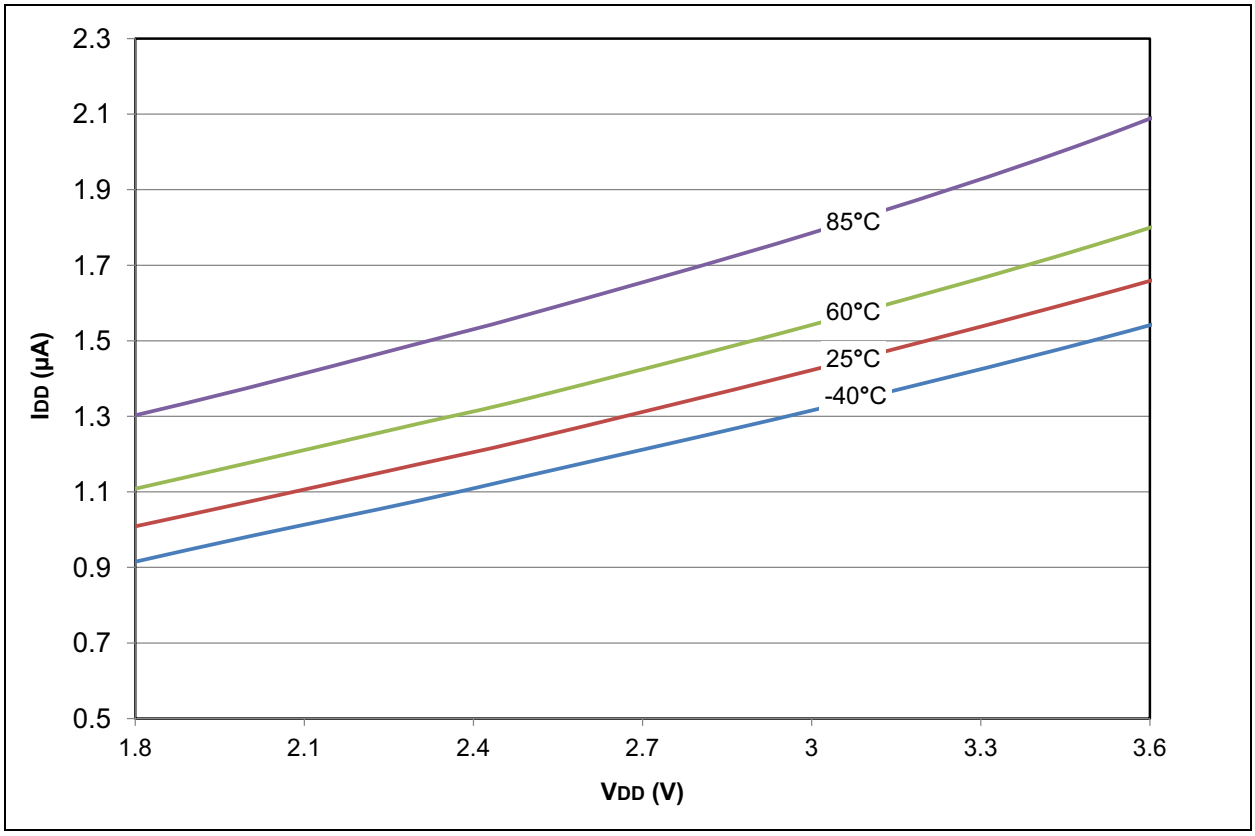

FIGURE 28-77: PIC18LF2X/4XK22 MAXIMUM IDD: SEC_IDLE 32.768 kHz

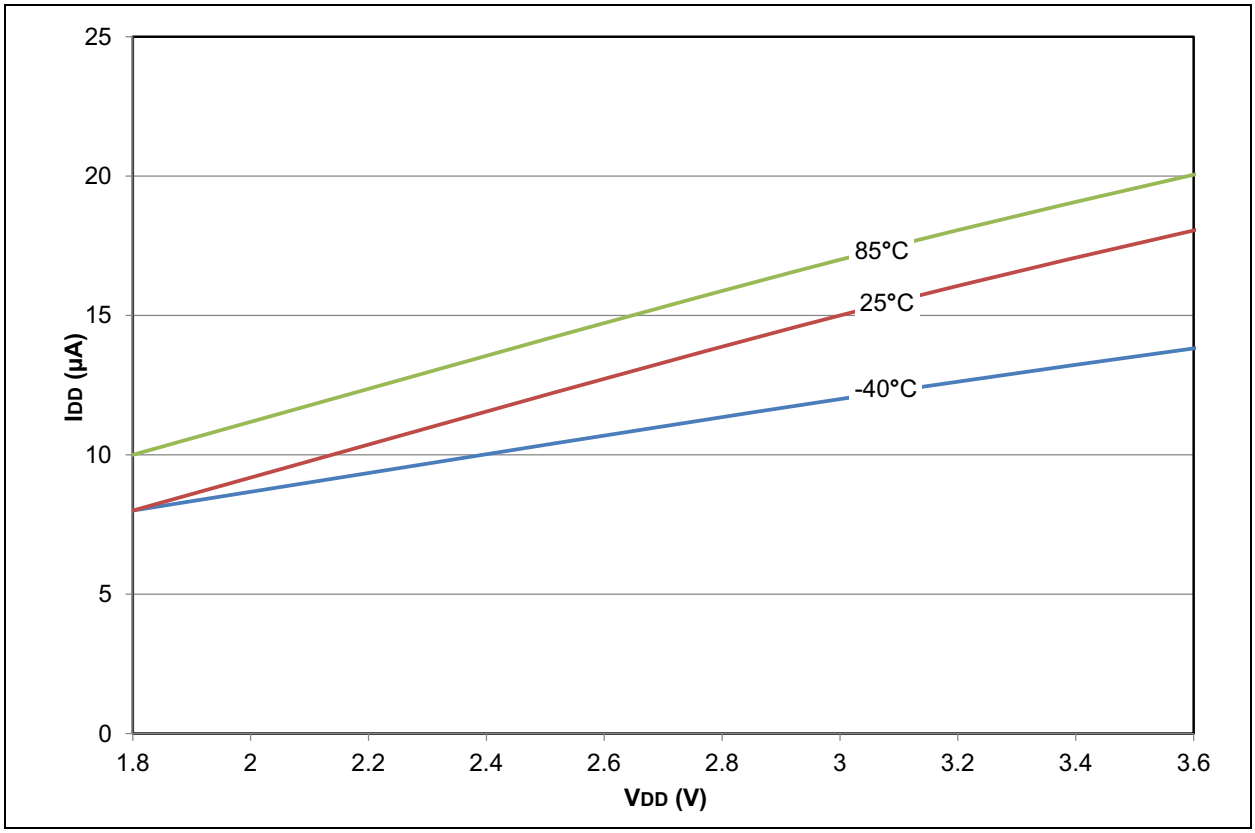

© 2010-2016 Microchip Technology Inc.

FIGURE 28-78: PIC18F2X/4XK22 TYPICAL IDD: SEC_IDLE 32.768 kHz

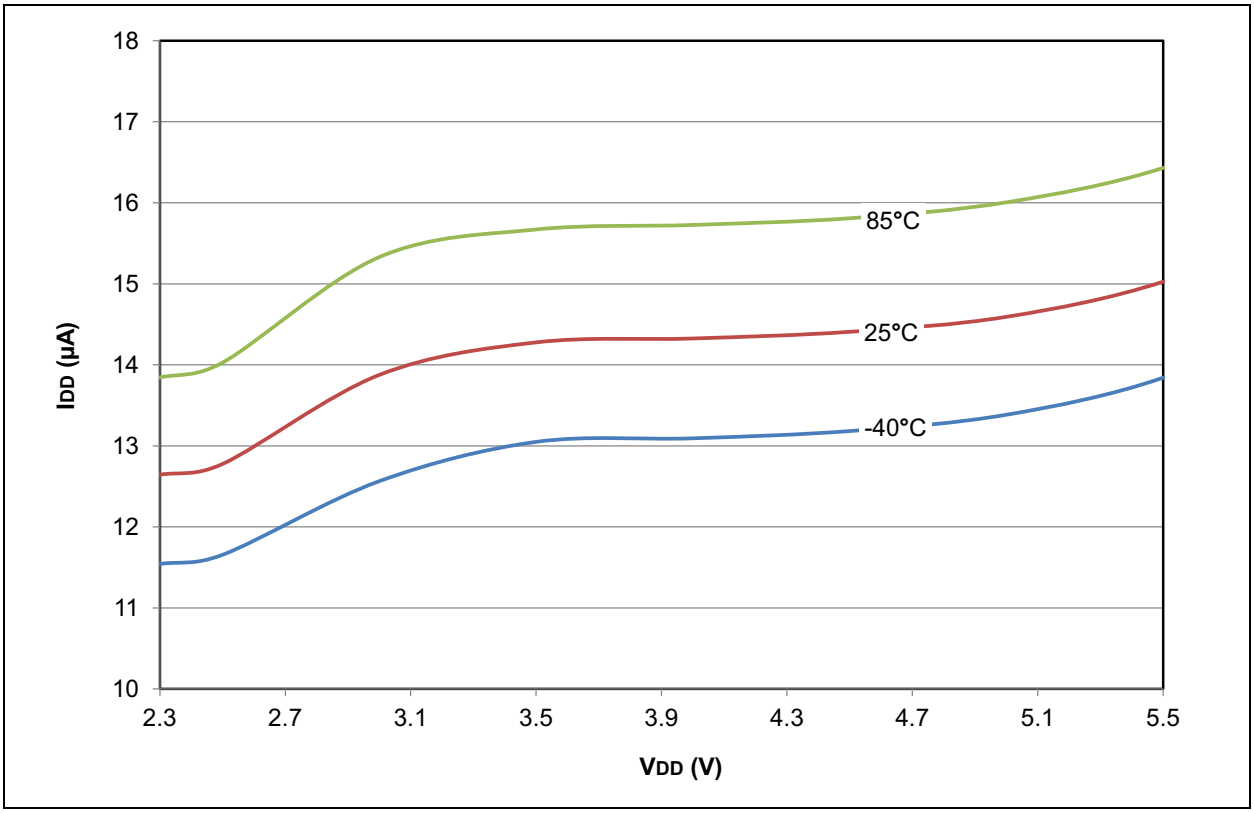

FIGURE 28-79: PIC18F2X/4XK22 MAXIMUM IDD: SEC_IDLE 32.768 kHz

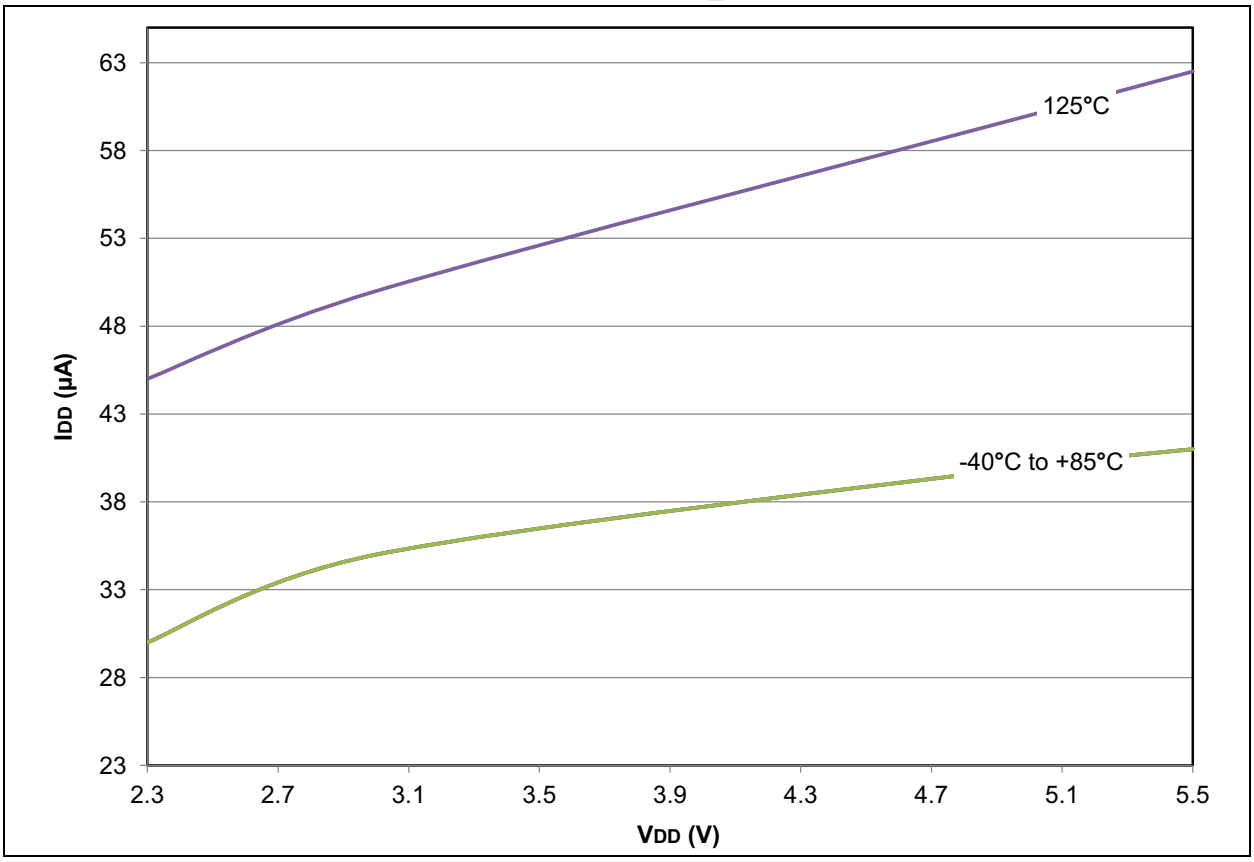

FIGURE 28-80: PIC18(L)F2X/4XK22 TTL BUFFER INPUT LOW VOLTAGE

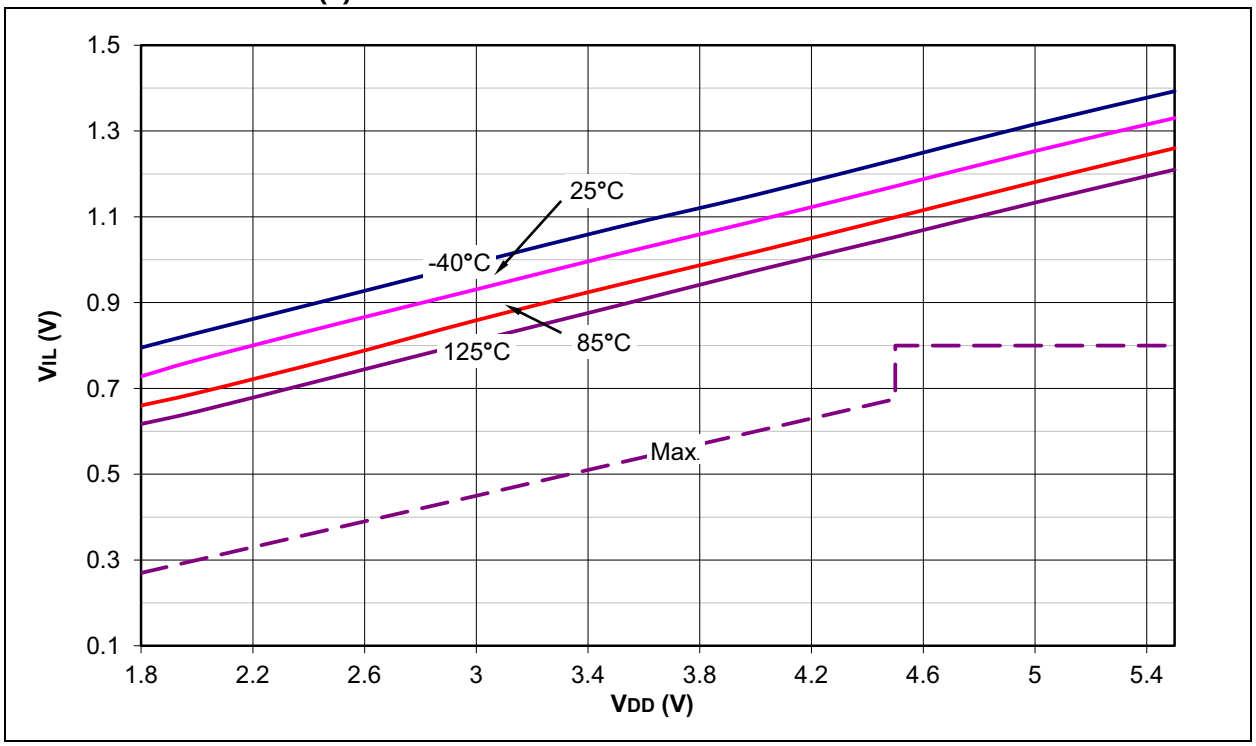

FIGURE 28-81: PIC18(L)F2X/4XK22 SCHMITT TRIGGER BUFFER INPUT LOW VOLTAGE

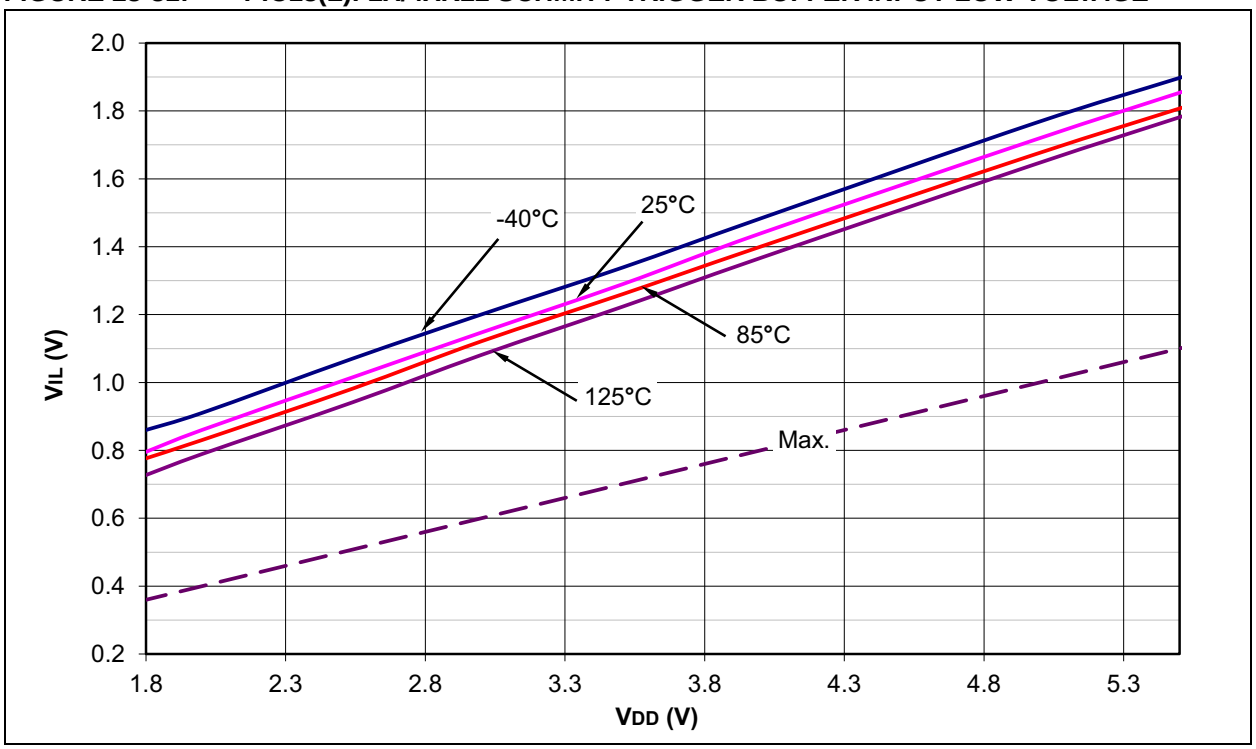

© 2010-2016 Microchip Technology Inc.

FIGURE 28-82: PIC18(L)F2X/4XK22 TTL BUFFER INPUT HIGH VOLTAGE

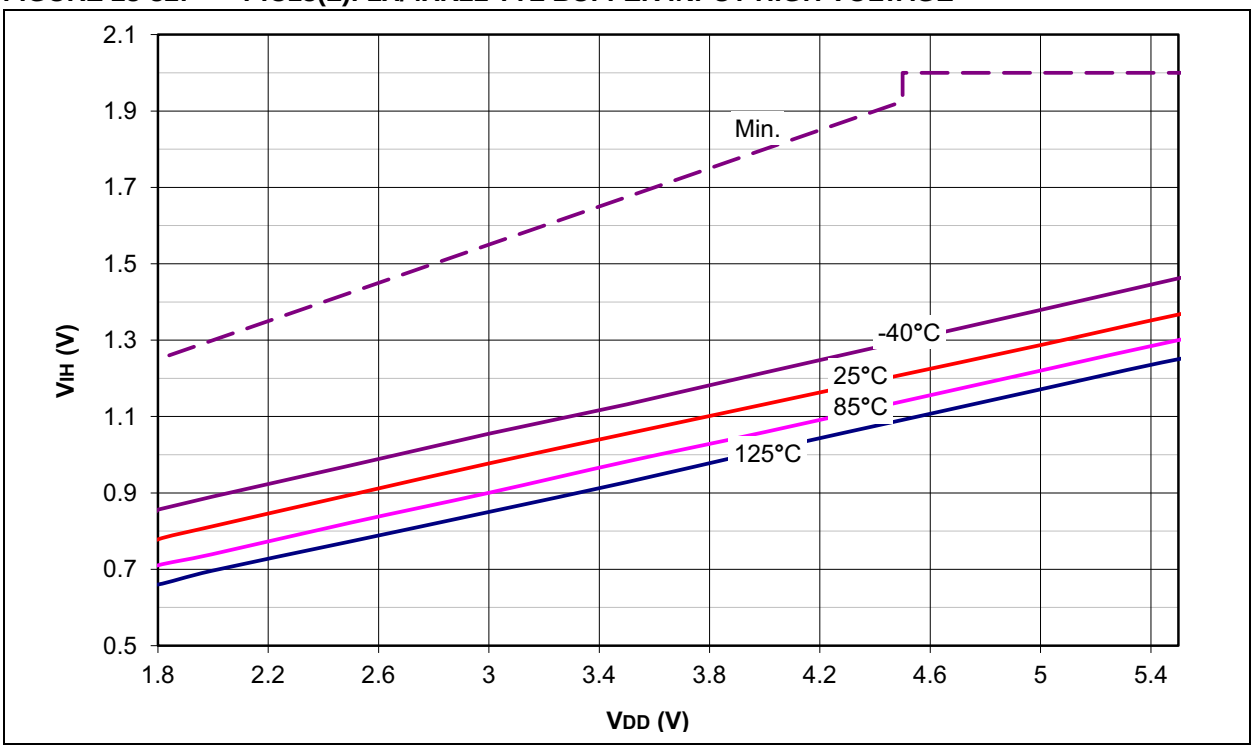

FIGURE 28-83: PIC18(L)F2X/4XK22 SCHMITT TRIGGER BUFFER INPUT HIGH VOLTAGE

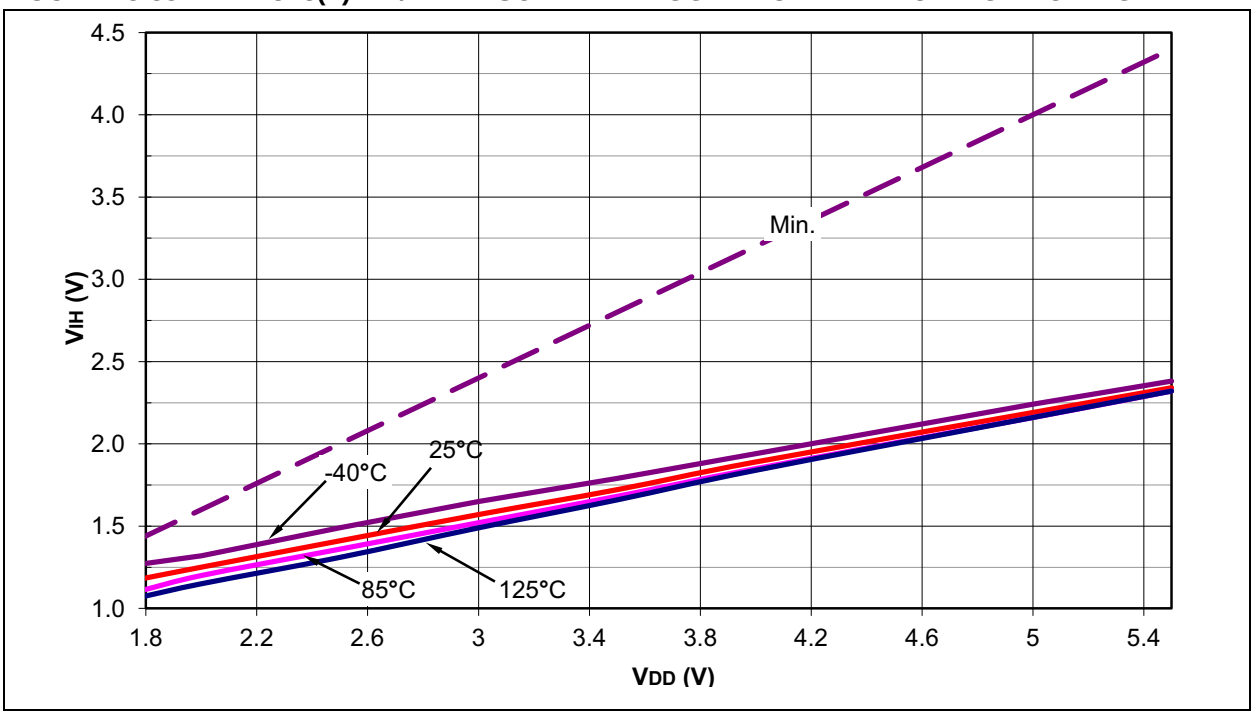

FIGURE 28-84: PIC18(L)F2X/4XK22 PIN INPUT LEAKAGE

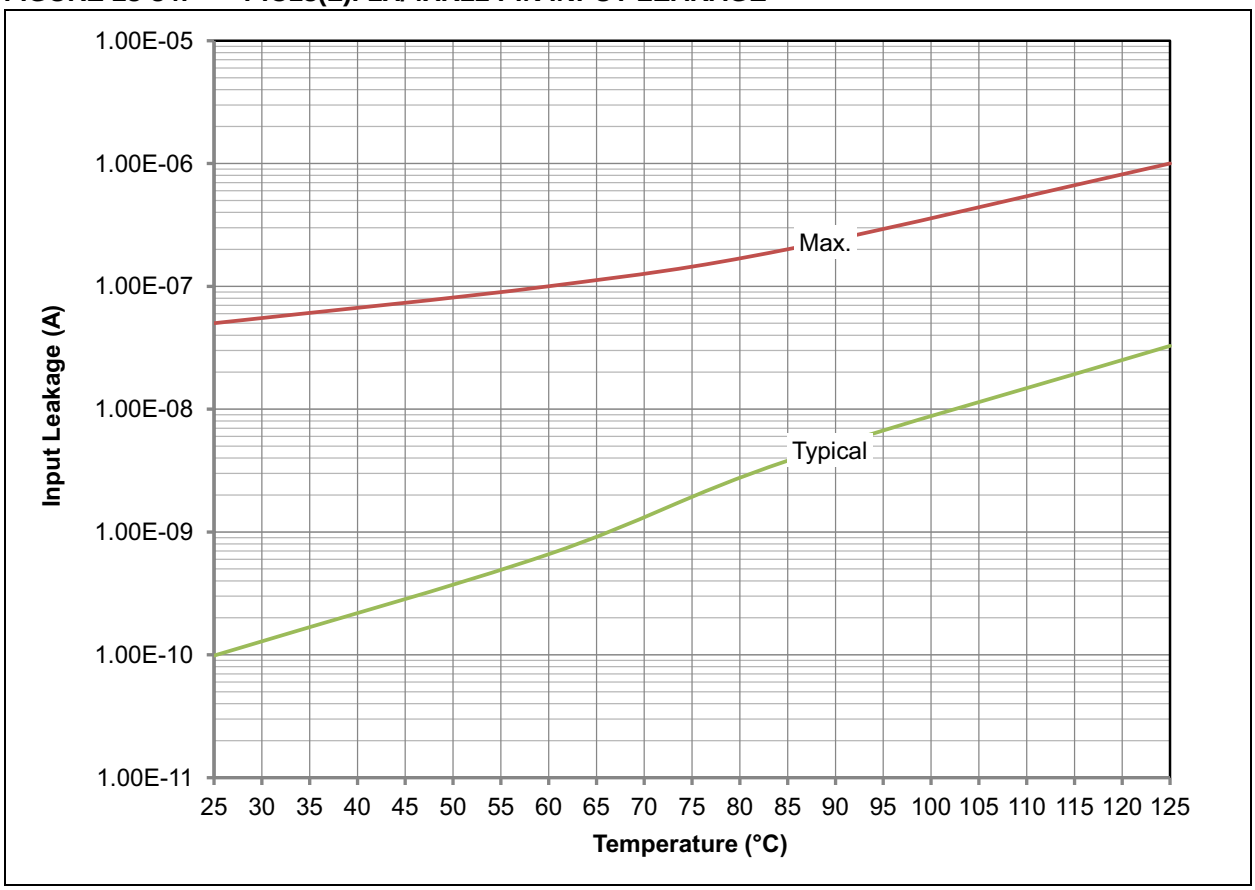

© 2010-2016 Microchip Technology Inc.

FIGURE 28-85: PIC18(L)F2X/4XK22 OUTPUT LOW VOLTAGE

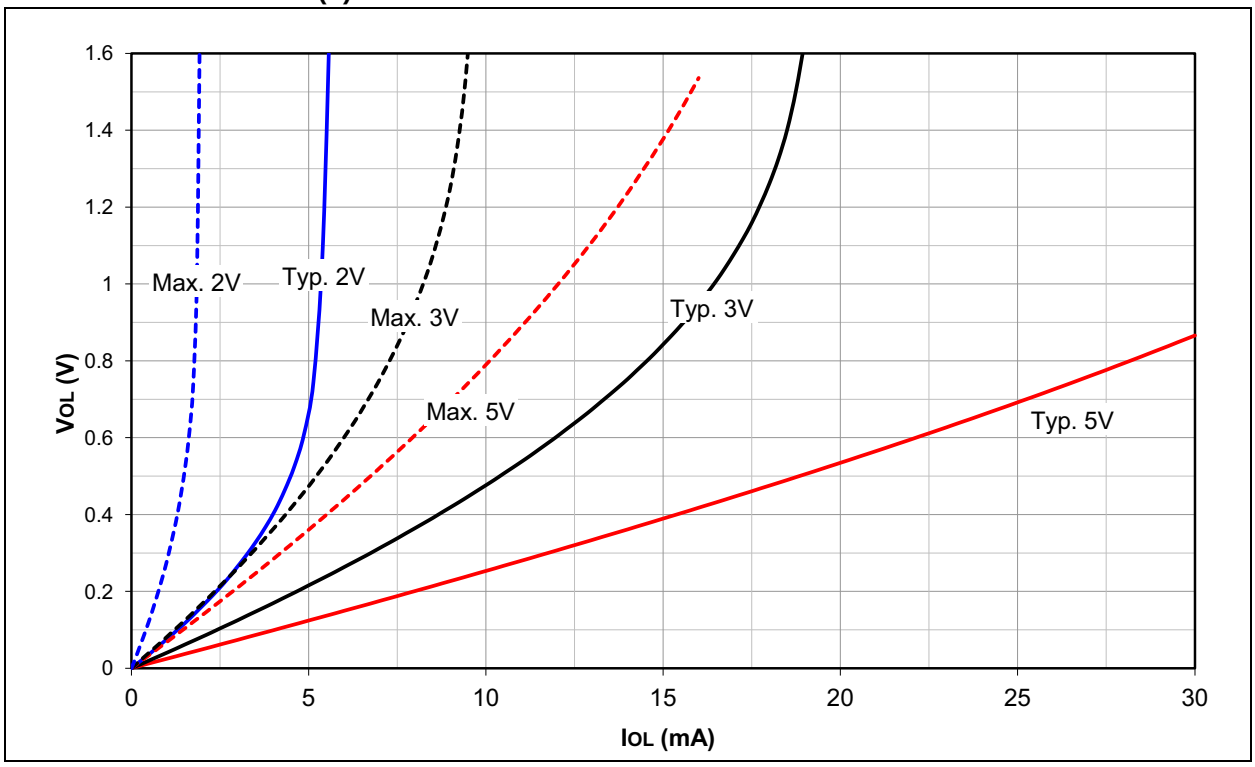

FIGURE 28-86: PIC18(L)F2X/4XK22 OUTPUT HIGH VOLTAGE

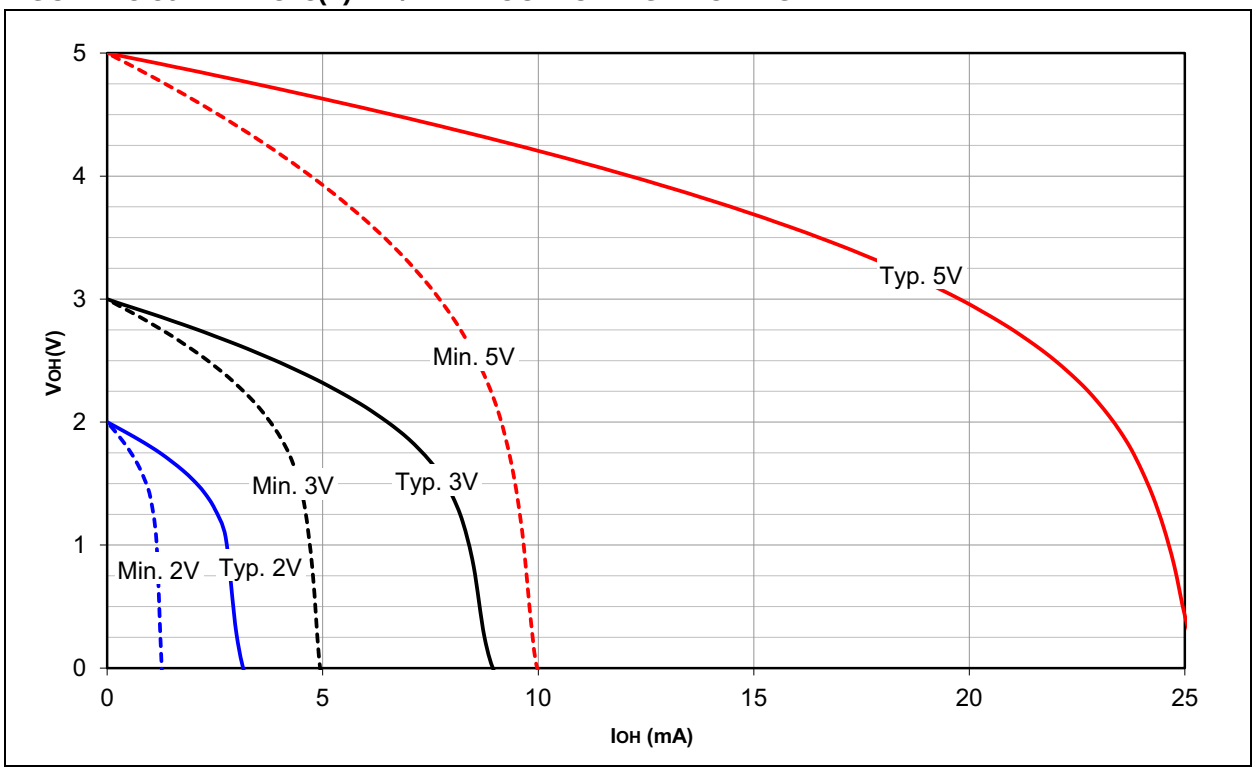

FIGURE 28-87: PIC18(L)F2X/4XK22 COMPARATOR OFFSET VOLTAGE, NORMAL-POWER MODE; VDD=5.5V

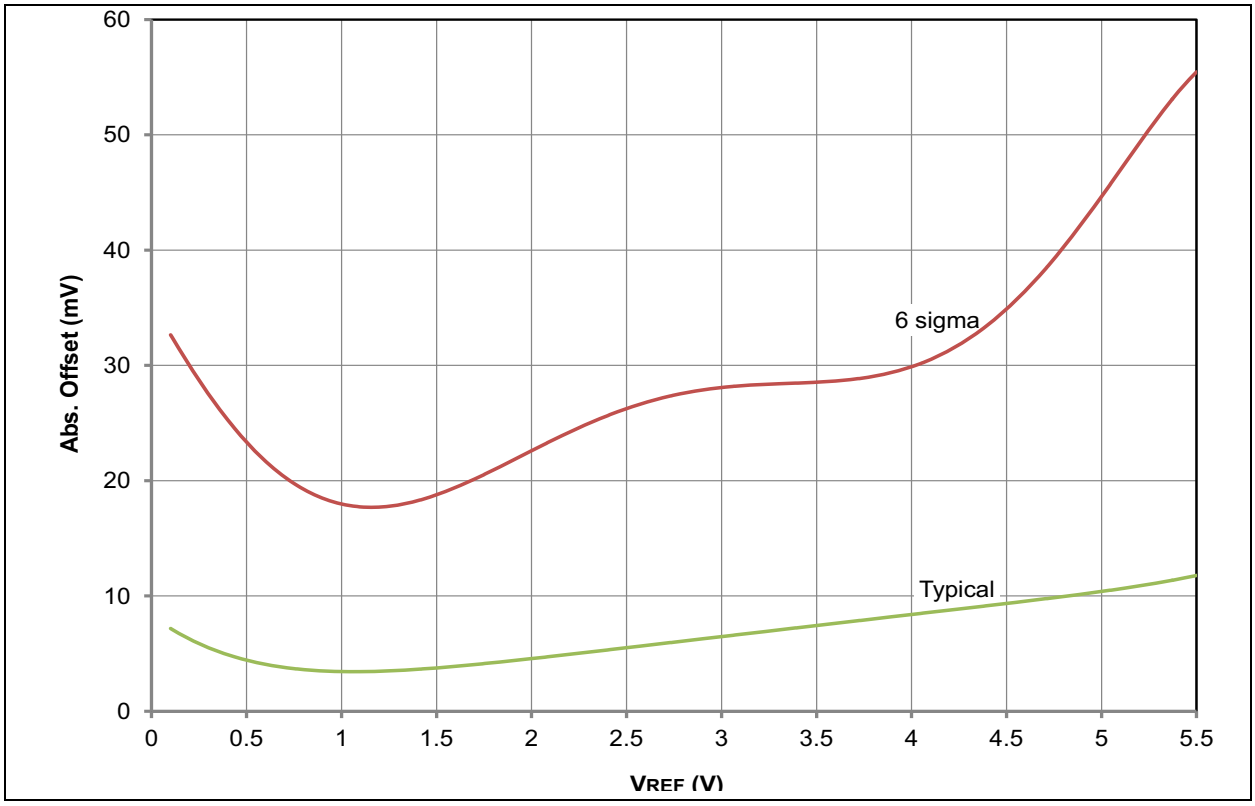

FIGURE 28-88: PIC18(L)F2X/4XK22 COMPARATOR OFFSET VOLTAGE, NORMAL-POWER MODE; VDD=3.0V

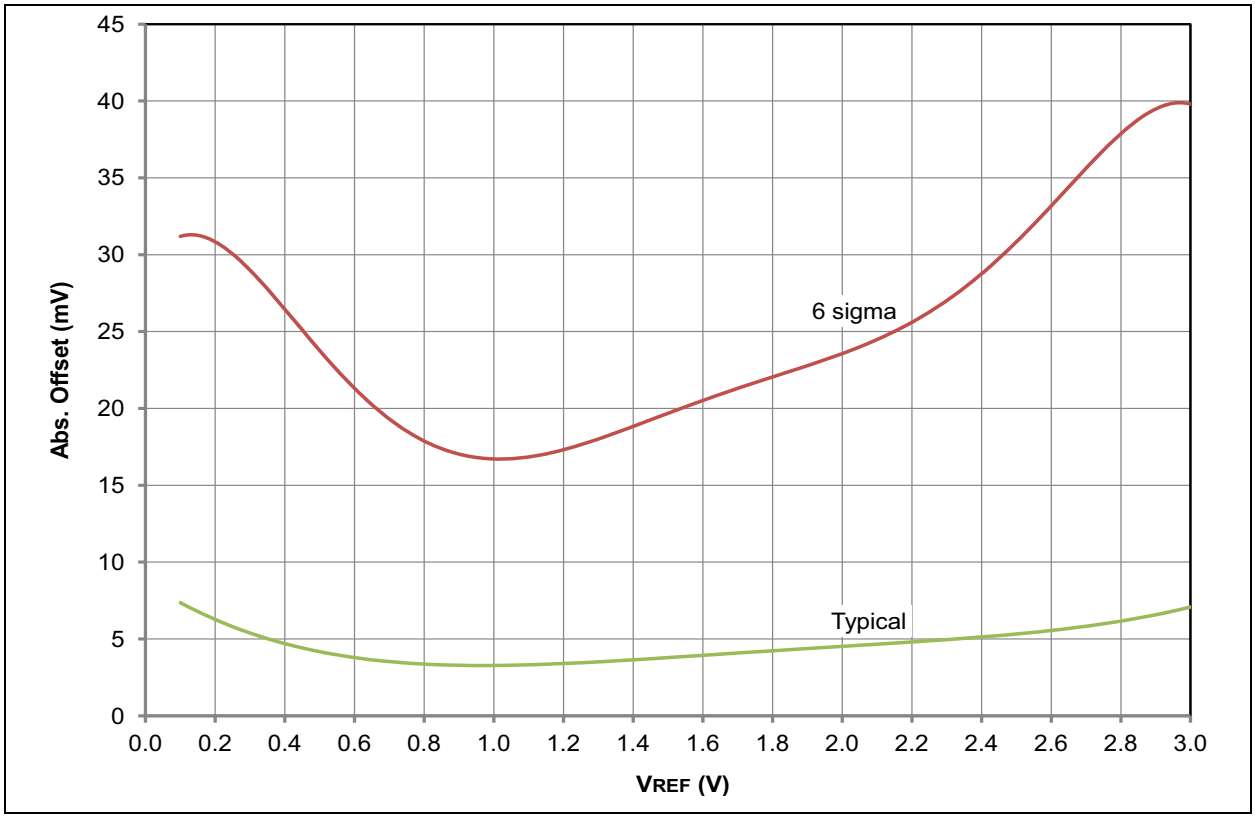

© 2010-2016 Microchip Technology Inc.

FIGURE 28-89: PIC18LF2X/4XK22 COMPARATOR OFFSET VOLTAGE, NORMAL-POWER MODE; VDD=1.8V

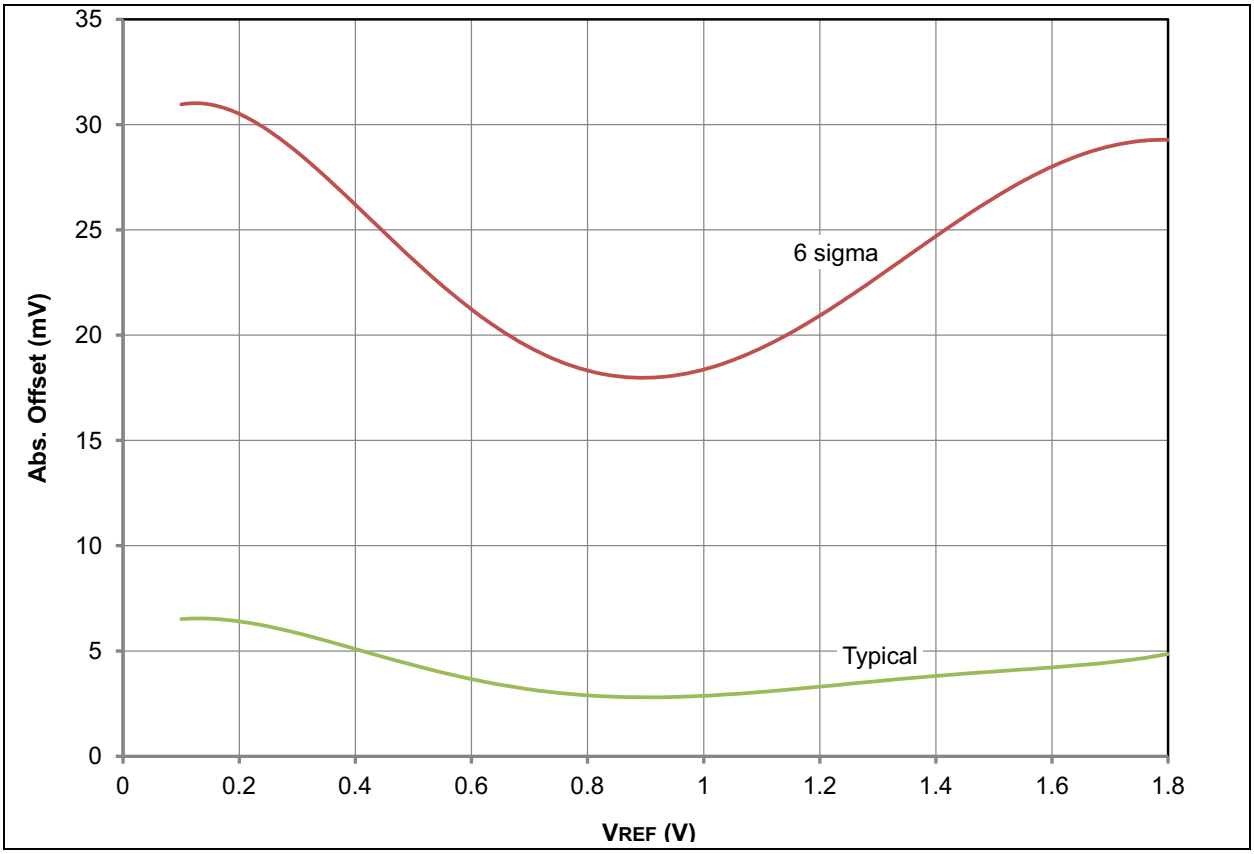

FIGURE 28-90: PIC18(L)F2X/4XK22 COMPARATOR OFFSET VOLTAGE, LOW-POWER MODE; VDD=5.5V

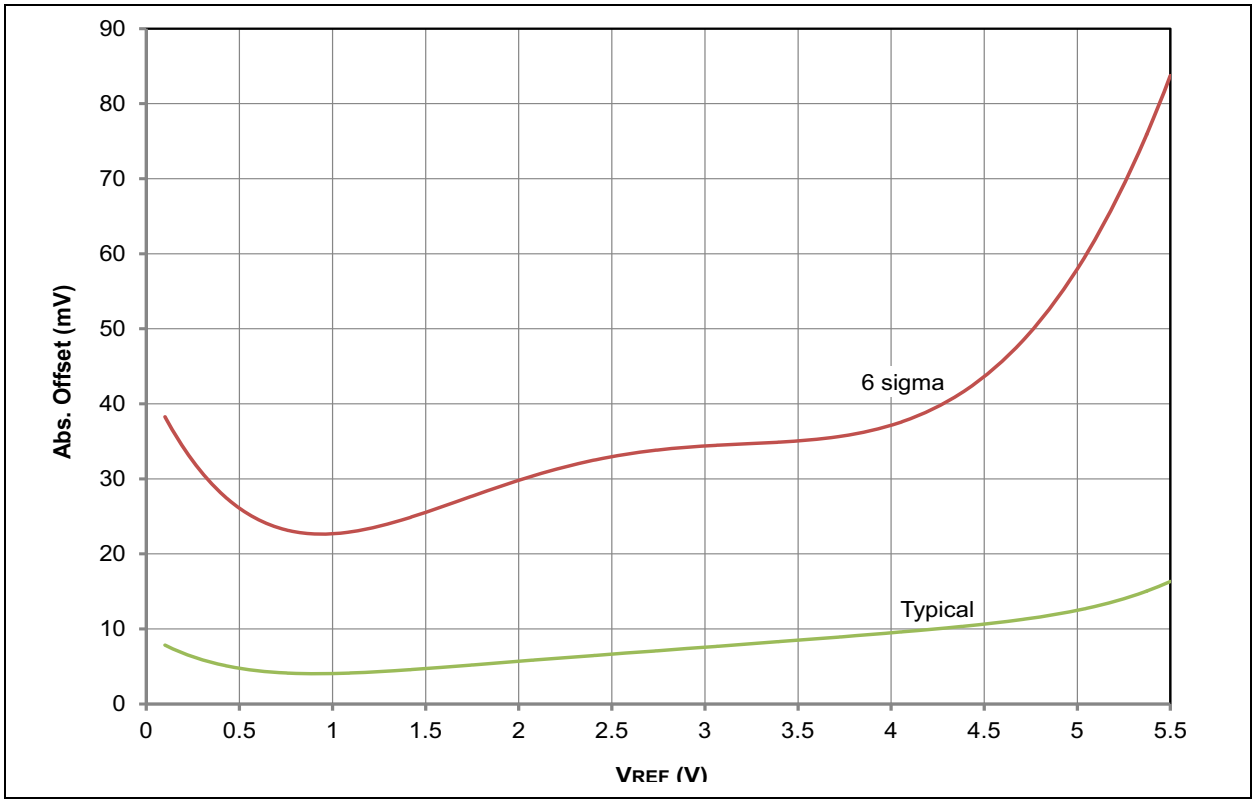

FIGURE 28-91: PIC18(L)F2X/4XK22 COMPARATOR OFFSET VOLTAGE, LOW-POWER MODE; VDD=3.0V

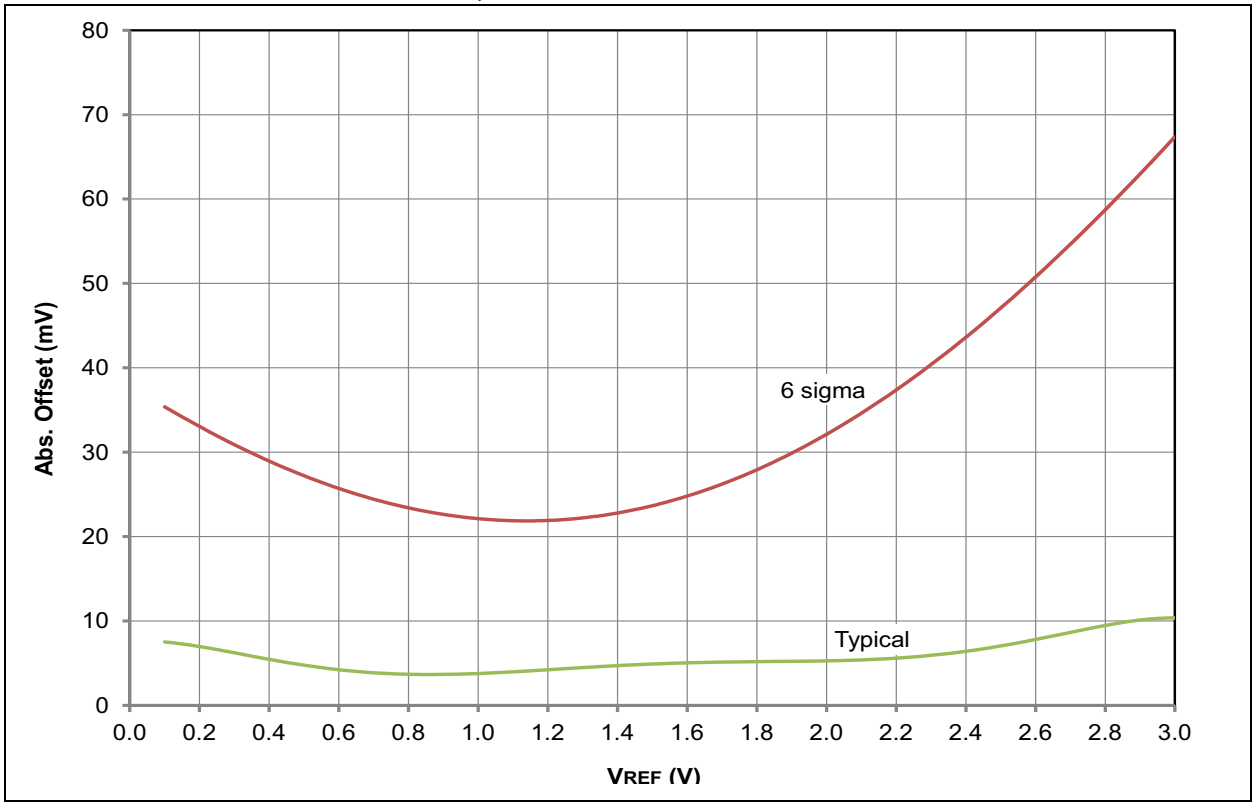

© 2010-2016 Microchip Technology Inc.

FIGURE 28-92: PIC18LF2X/4XK22 COMPARATOR OFFSET VOLTAGE, LOW-POWER MODE; VDD=1.8V

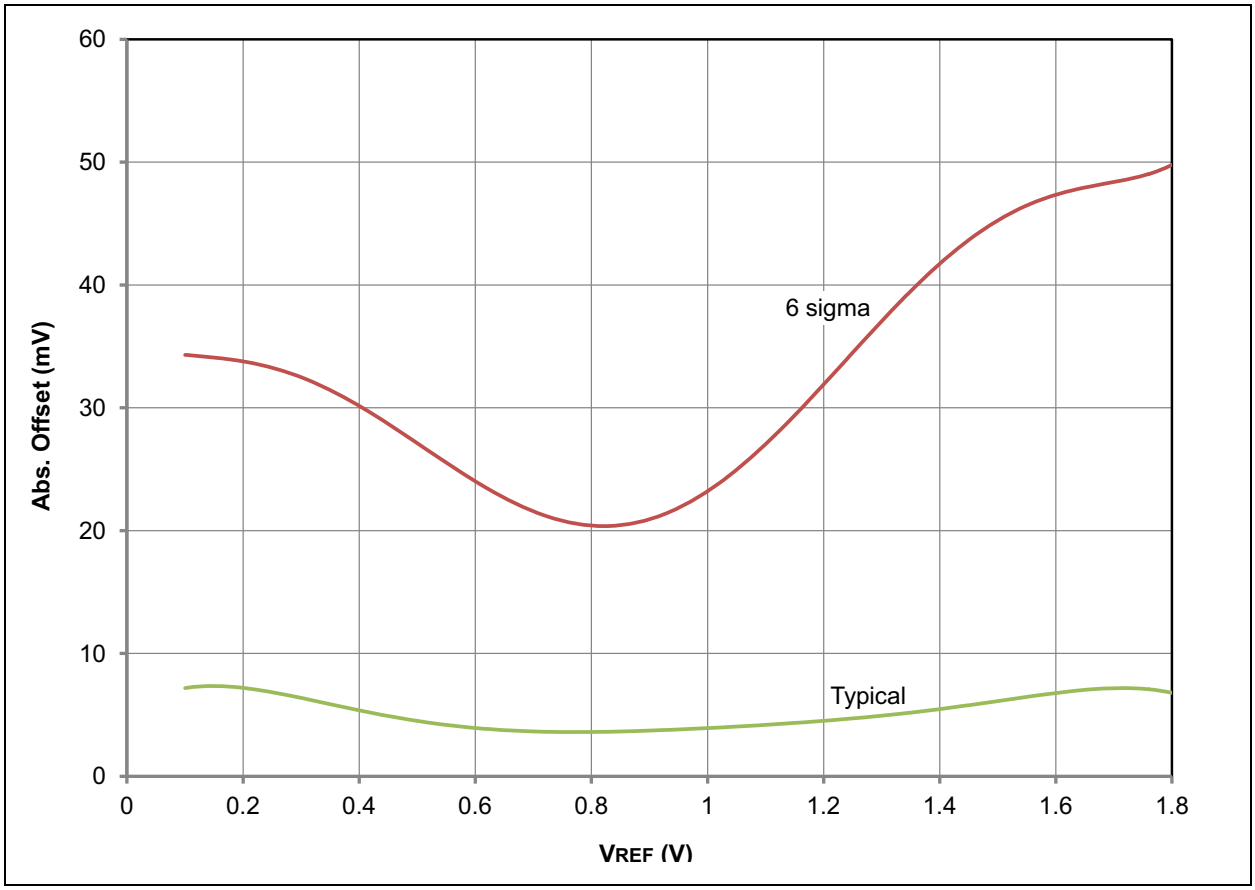

FIGURE 28-93: PIC18(L)F2X/4XK22 TYPICAL DAC ABS. ERROR VDD = 2.5V, 3.0V, & 5.5V

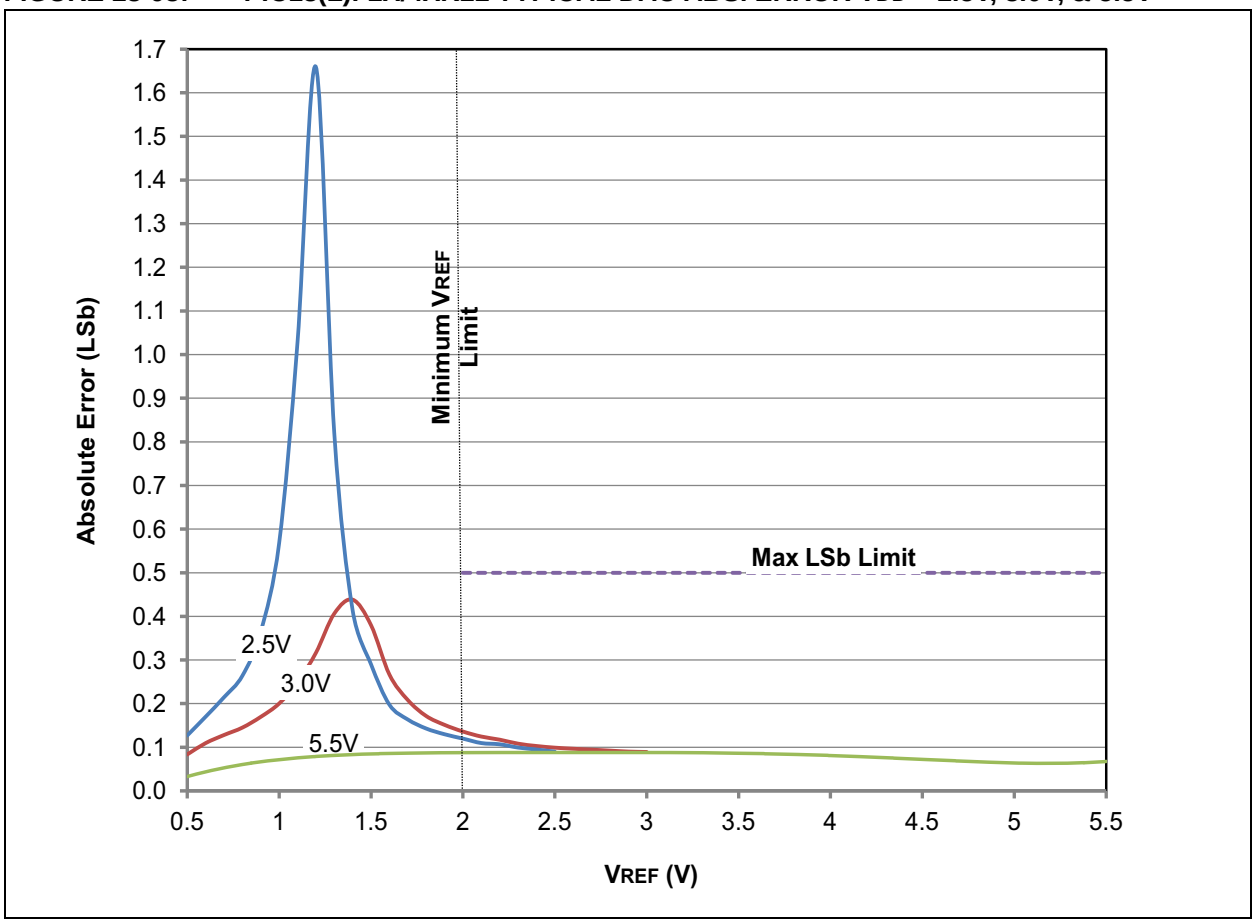

© 2010-2016 Microchip Technology Inc.

FIGURE 28-94: PIC18(L)F2X/4XK22 TYPICAL FIXED VOLTAGE REFERENCE 1x OUTPUT

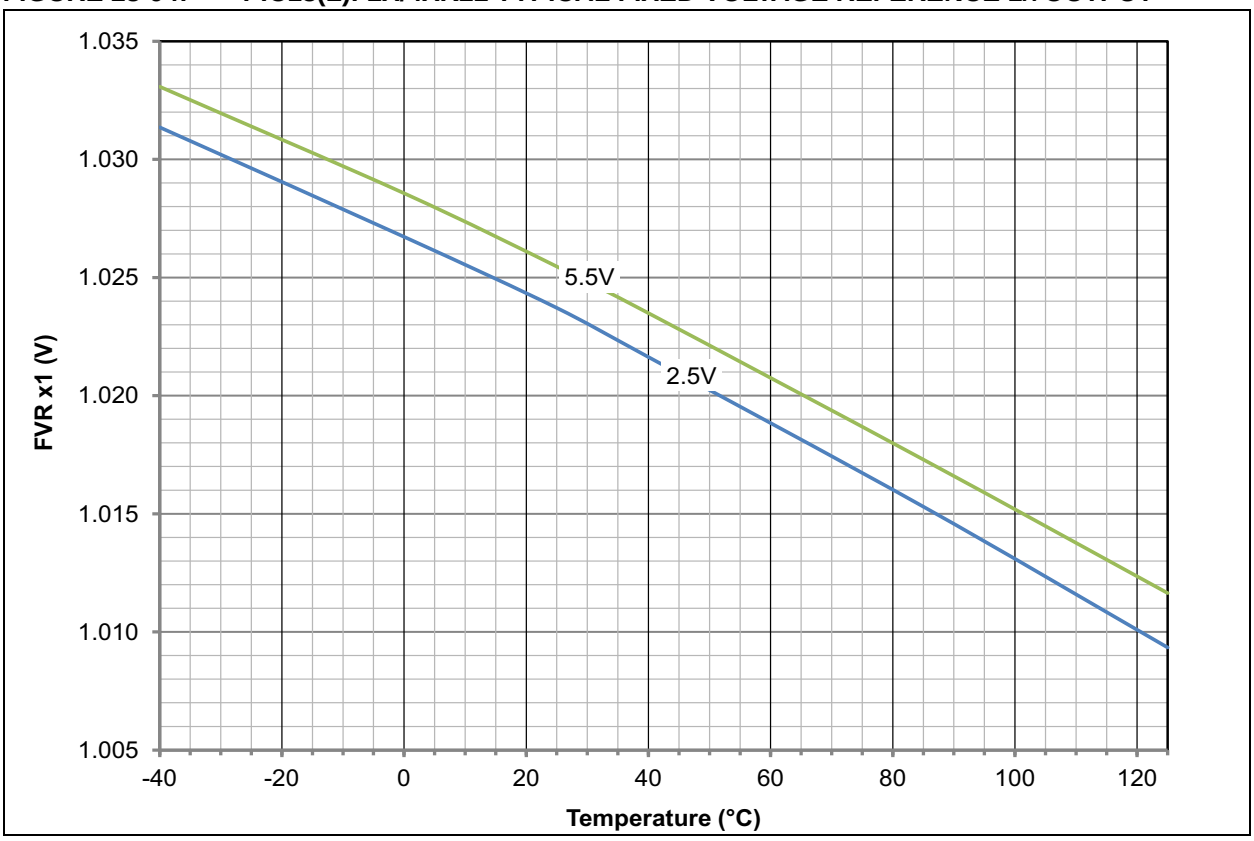

FIGURE 28-95: PIC18(L)F2X/4XK22 TYPICAL FIXED VOLTAGE REFERENCE 1x OUTPUT

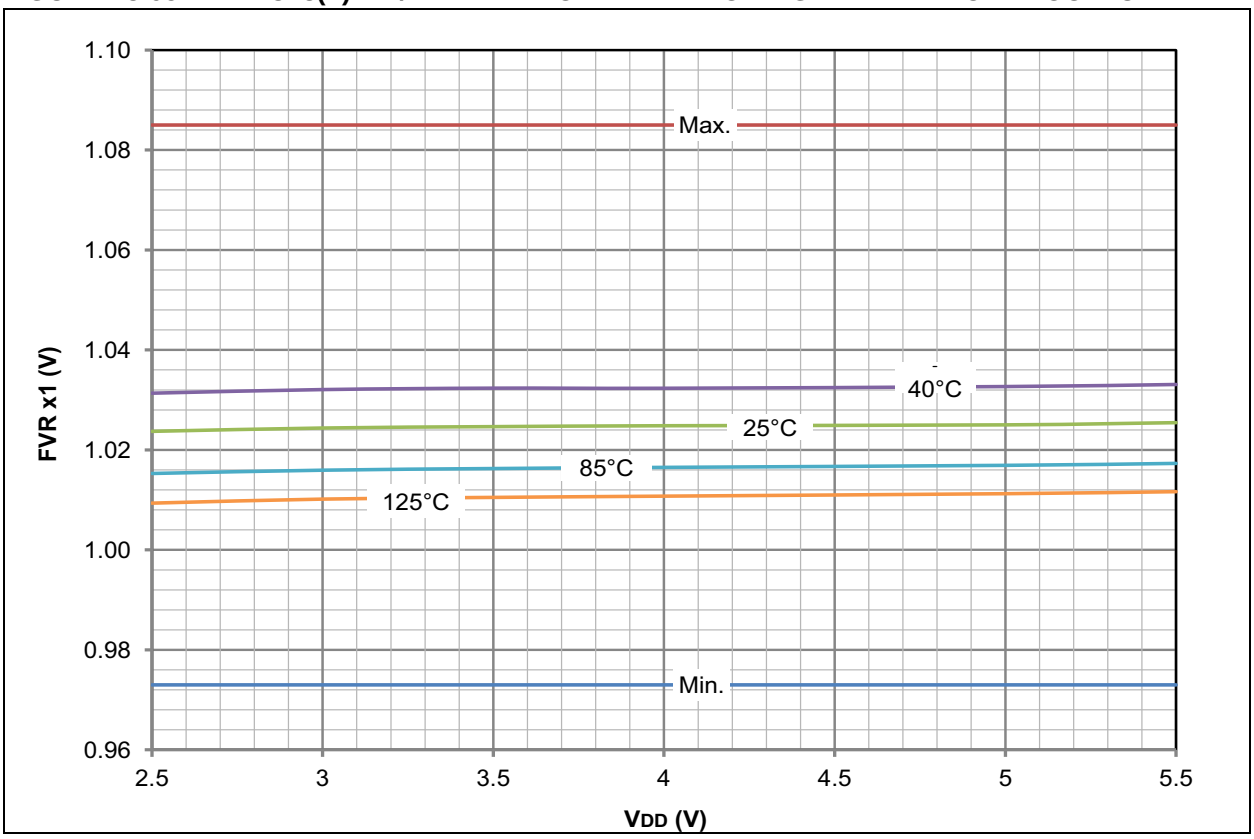

FIGURE 28-96: PIC18(L)F2X/4XK22 TYPICAL FIXED VOLTAGE REFERENCE 2x OUTPUT

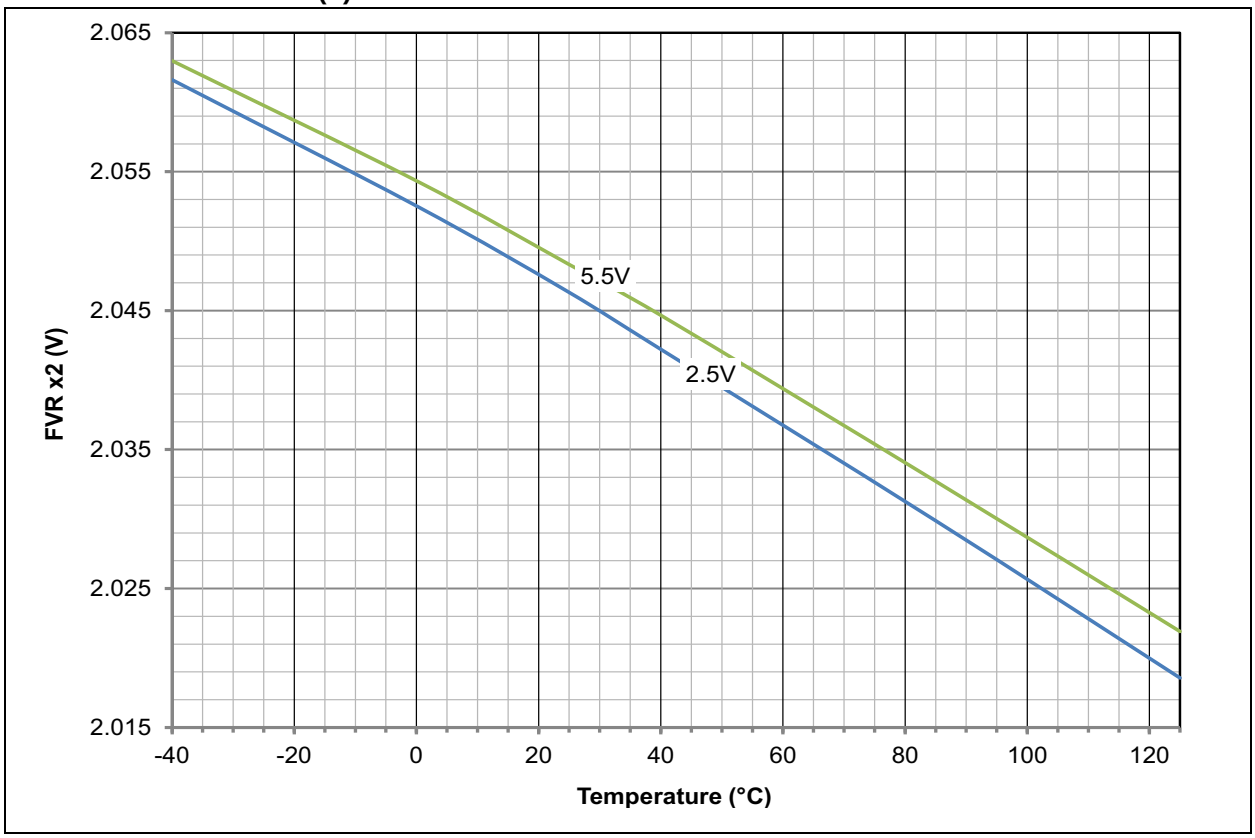

FIGURE 28-97: PIC18(L)F2X/4XK22 TYPICAL FIXED VOLTAGE REFERENCE 2x OUTPUT

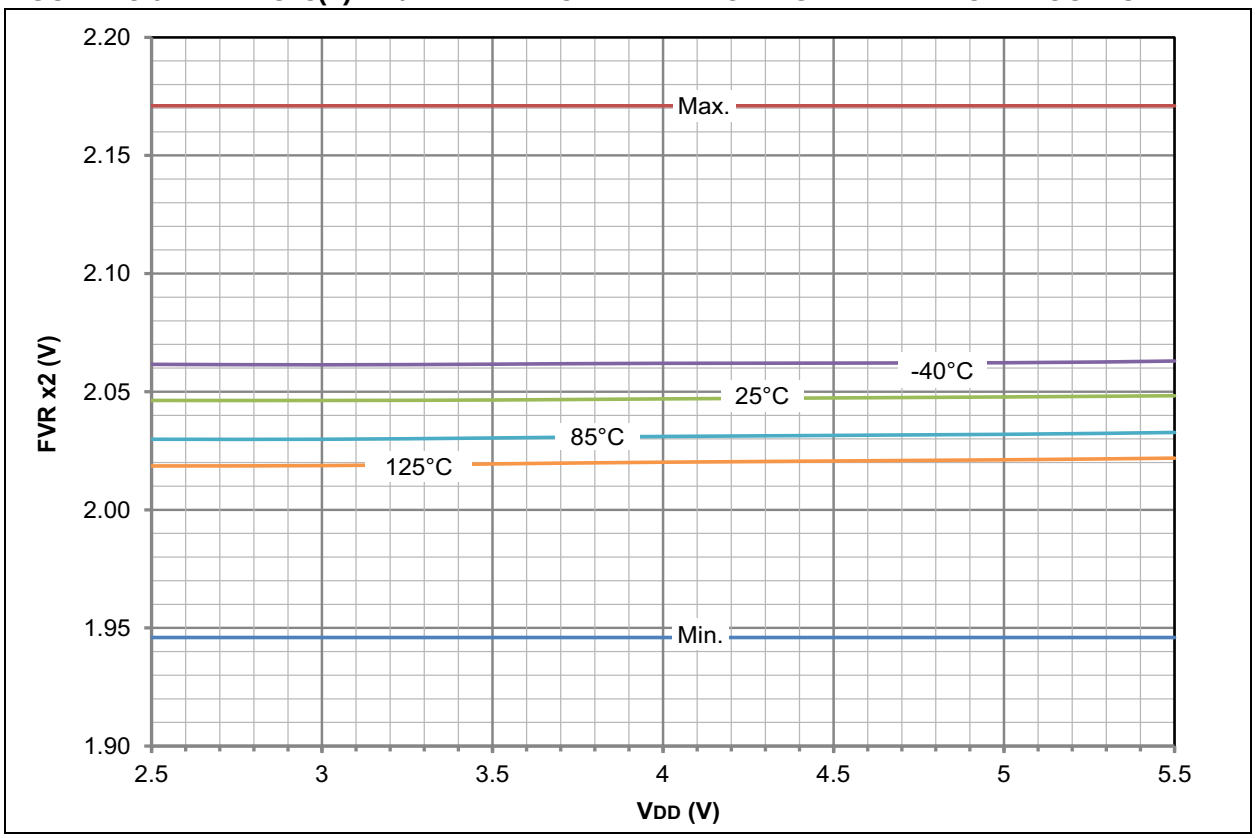

© 2010-2016 Microchip Technology Inc.

FIGURE 28-98: PIC18F2X/4XK22 TYPICAL FIXED VOLTAGE REFERENCE 4x OUTPUT

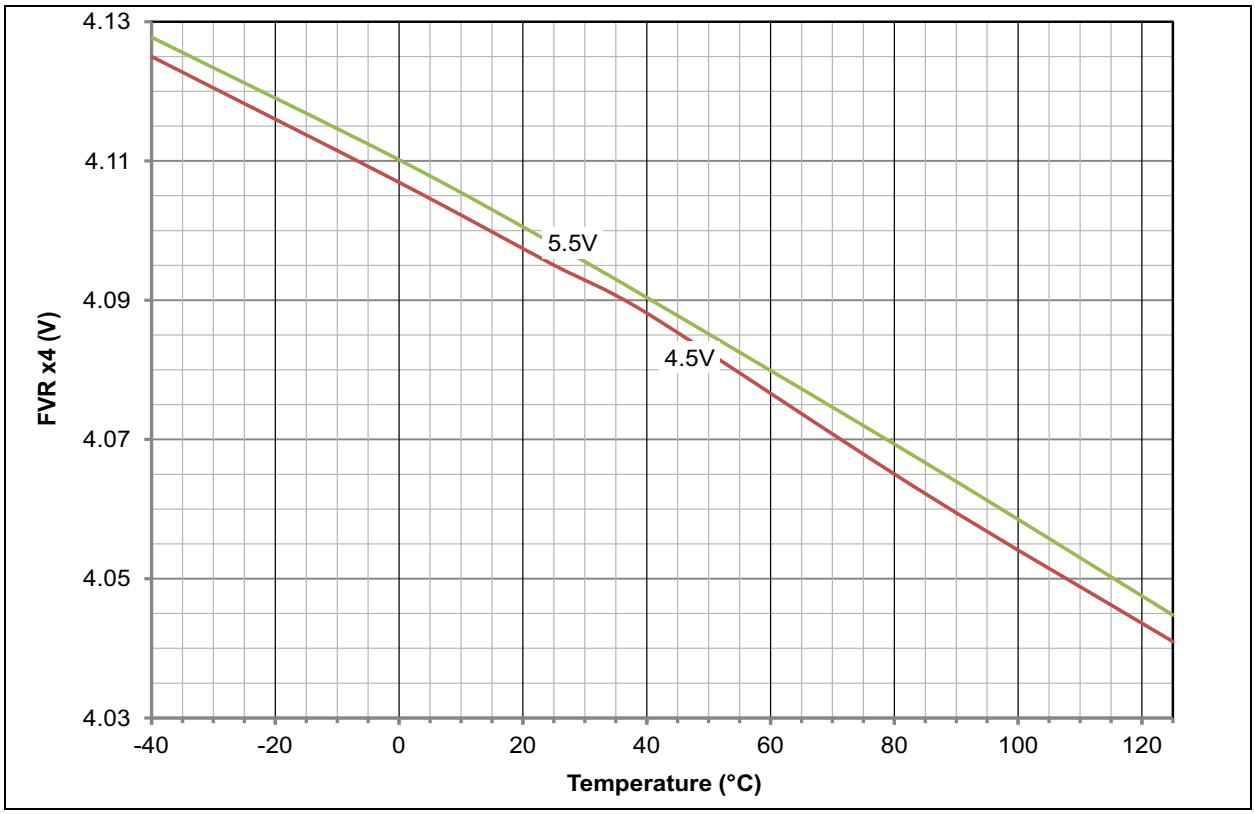

FIGURE 28-99: PIC18F2X/4XK22 TYPICAL FIXED VOLTAGE REFERENCE 4x OUTPUT

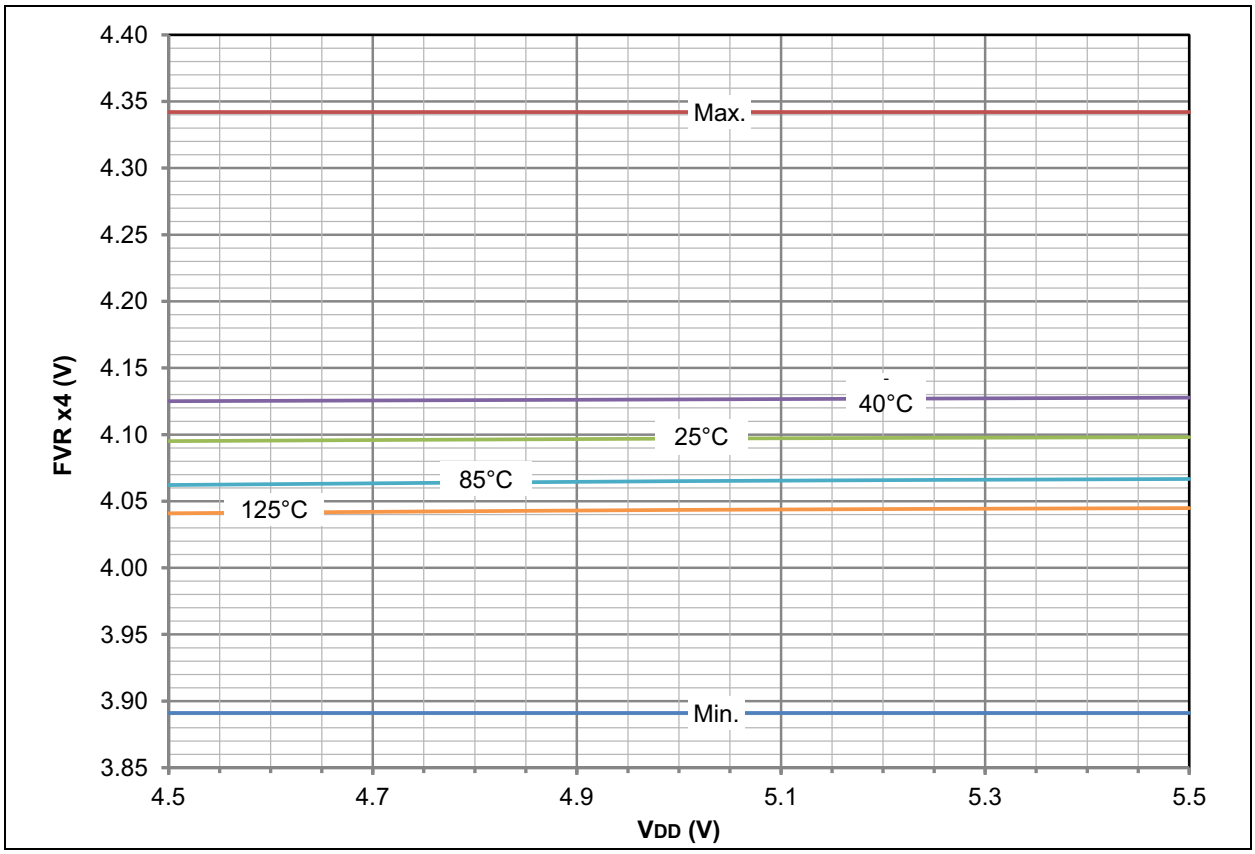

FIGURE 28-100: PIC18(L)F2X/4XK22 HF-INTOSC FREQUENCY vs. TEMPERATURE at 16 MHz
MIN / MAX: ± 2%, T = 0°C to +70°C
+2% / -3%, T = +70°C to +85°C
± 5%, T = -40°C to 0°C and +85°C to +125°C

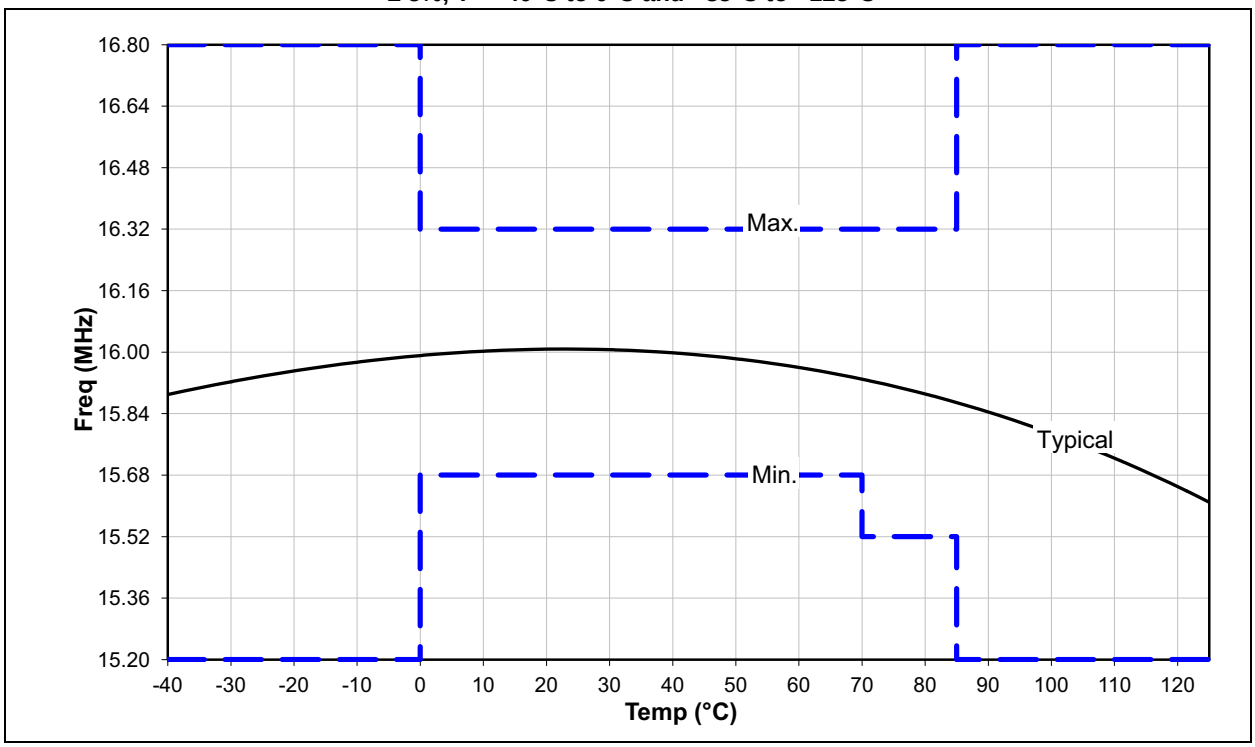

© 2010-2016 Microchip Technology Inc.

FIGURE 28-101: PIC18LF2X/4XK22 TYPICAL LF-INTOSC FREQUENCY vs. VDD
Min/Max = 31.25 kHz ± 15%, T = -40°C to +85°C

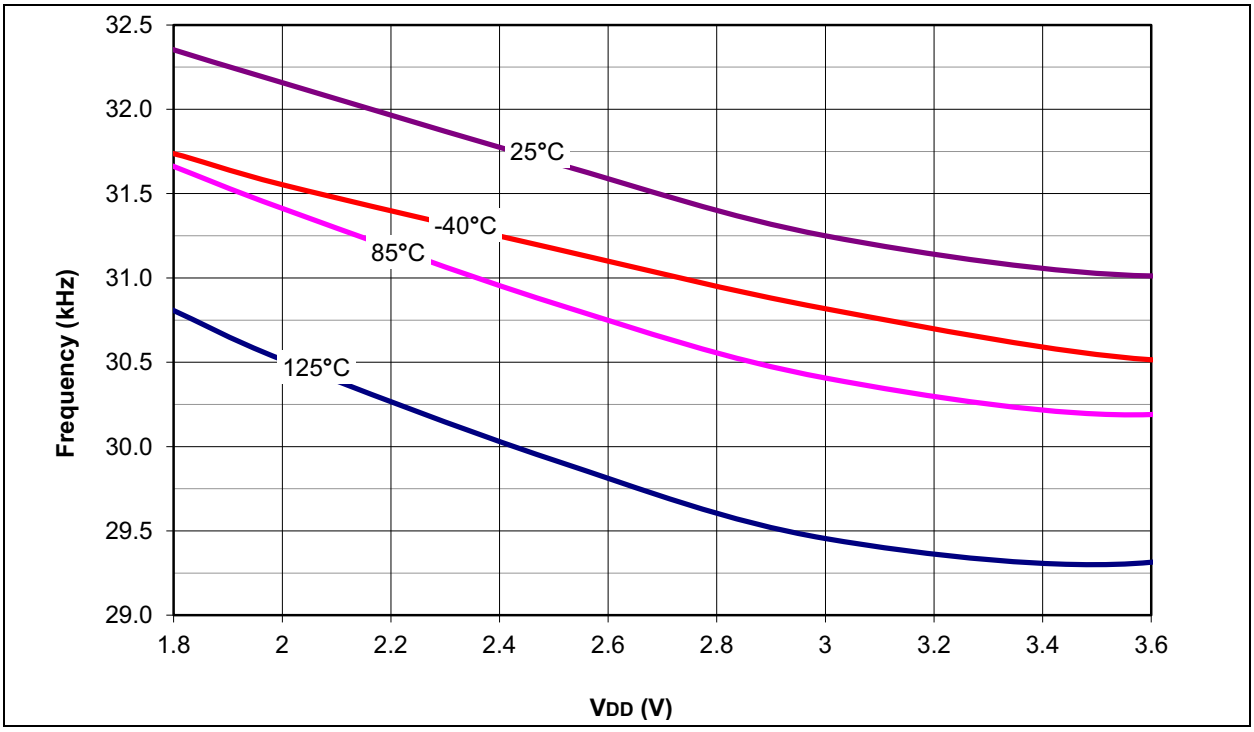

FIGURE 28-102: PIC18F2X/4XK22 TYPICAL LF-INTOSC FREQUENCY vs. VDD
Min/Max = 31.25 kHz ± 15%, T = -40°C to +85°C

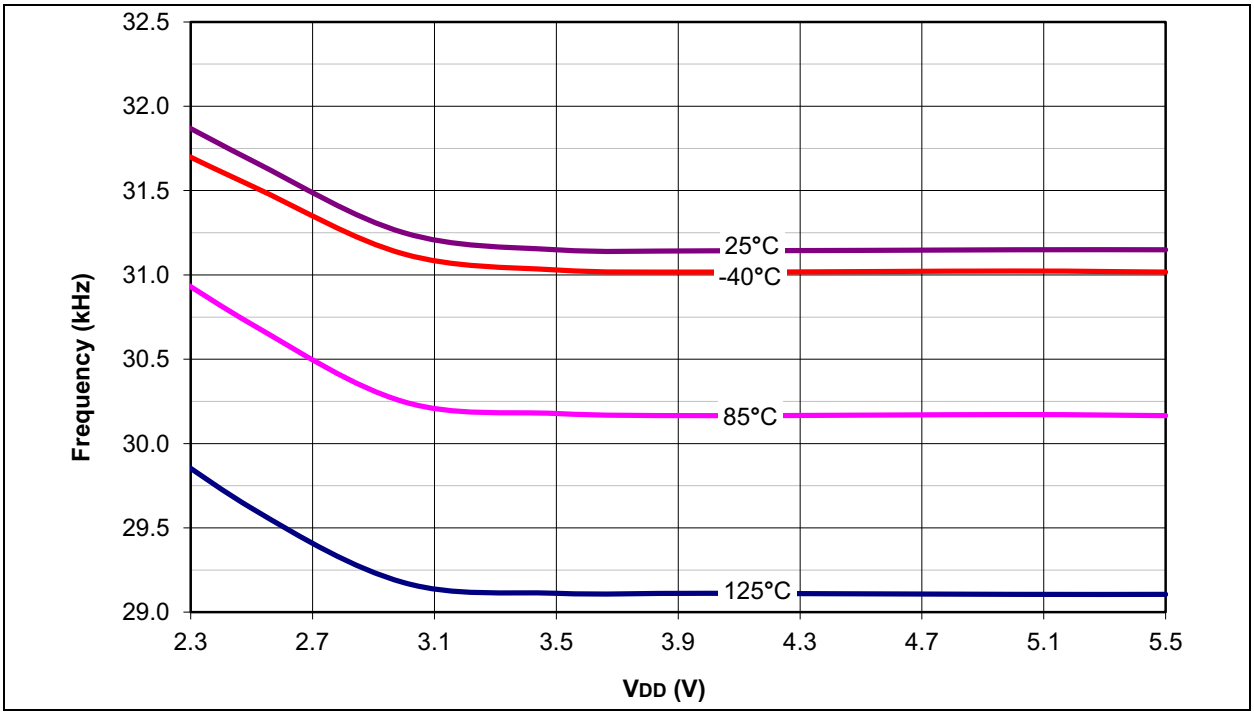

FIGURE 28-103: PIC18LF2X/4XK22 TYPICAL LF-INTOSC FREQUENCY vs. TEMPERATURE
Min/Max = 31.25 kHz ± 15%, T = -40°C to +85°C

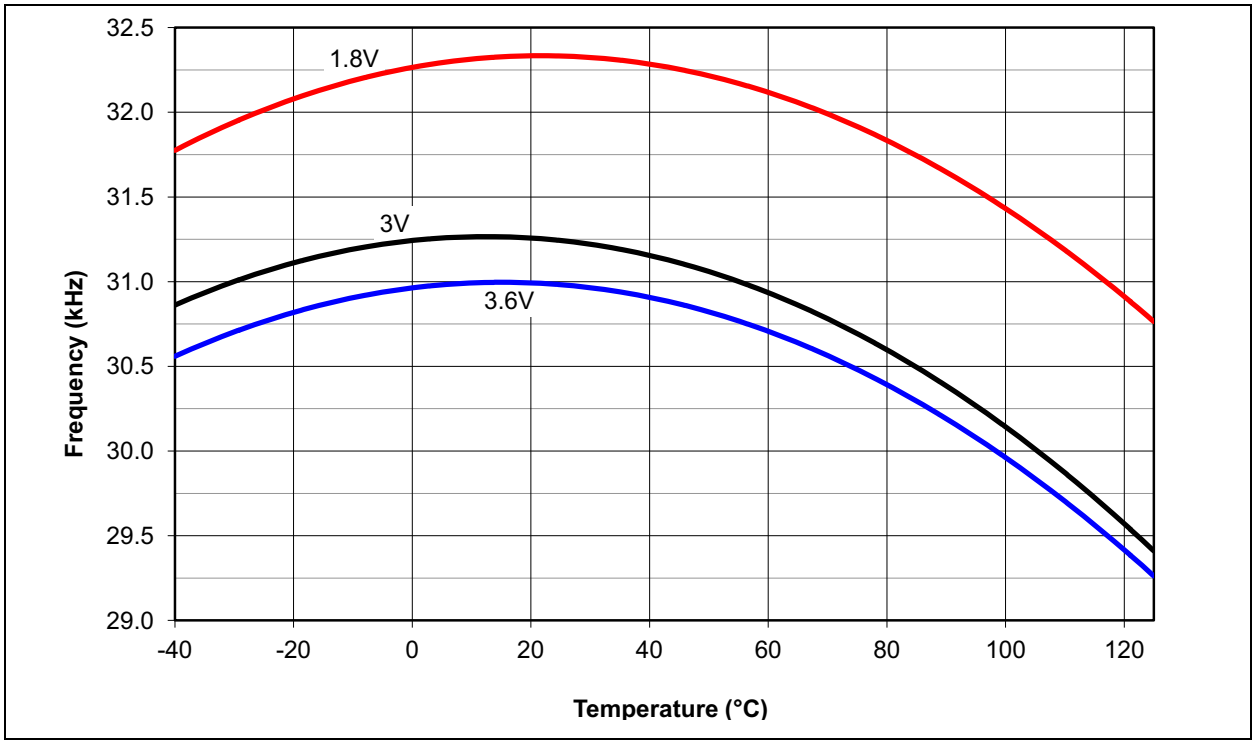

FIGURE 28-104: PIC18F2X/4XK22 TYPICAL LF-INTOSC FREQUENCY vs. TEMPERATURE
Min/Max = 31.25 kHz ± 15%, T = -40°C to +85°C

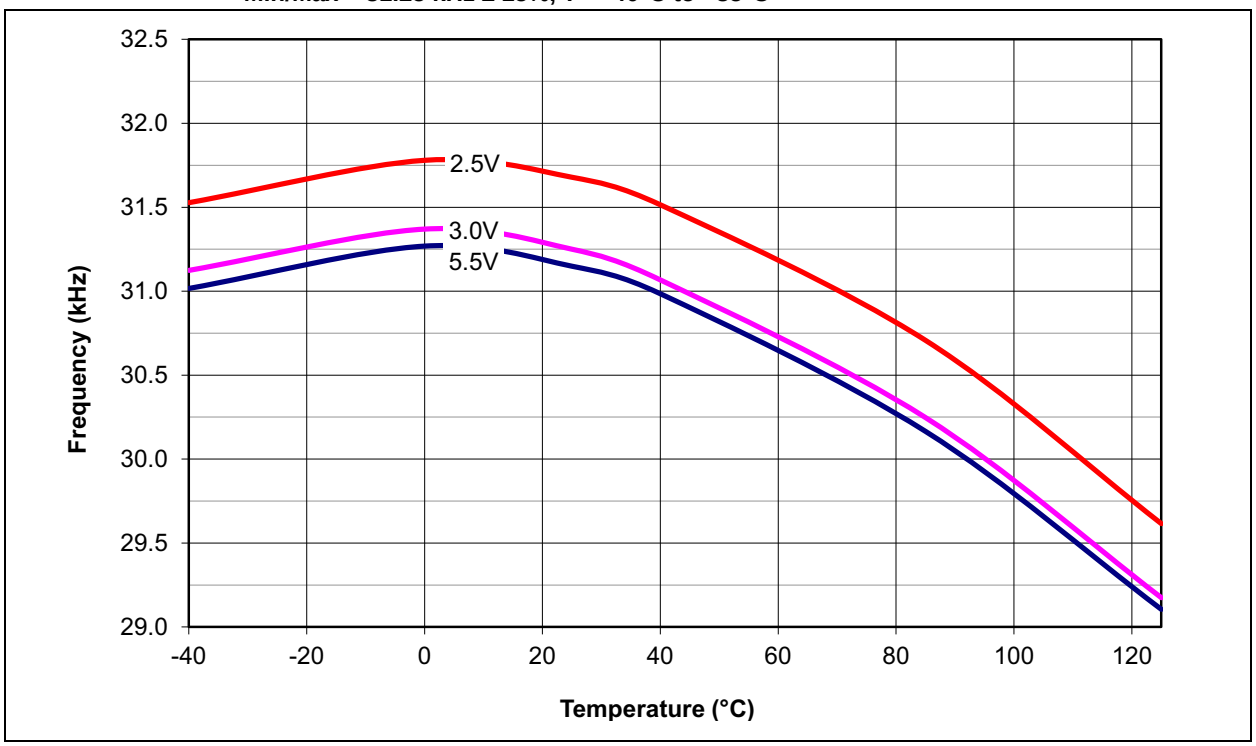

© 2010-2016 Microchip Technology Inc.

29.0 PACKAGING INFORMATION

29.1 Package Marking Information

28-Lead SPDIP (.300”)

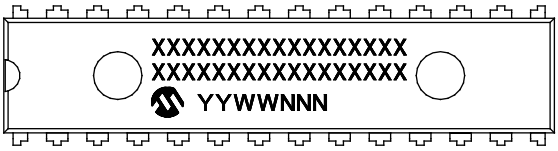

Example

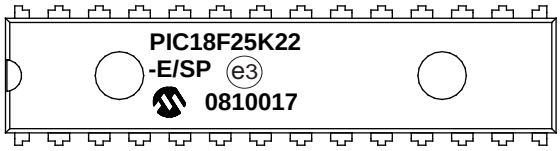

28-Lead SOIC (7.50 mm)

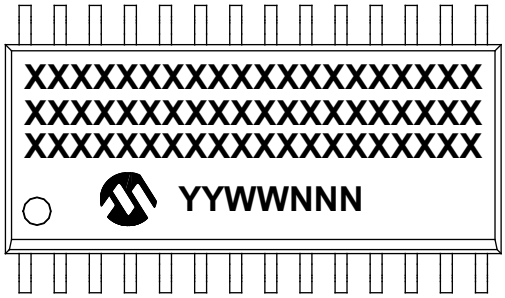

Example

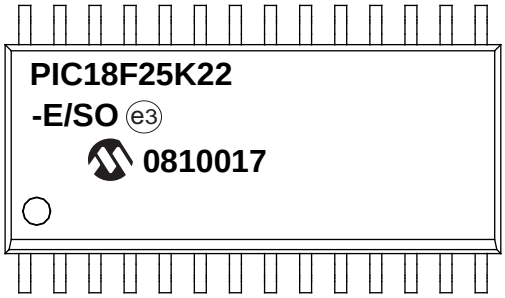

28-Lead SSOP (5.30 mm)

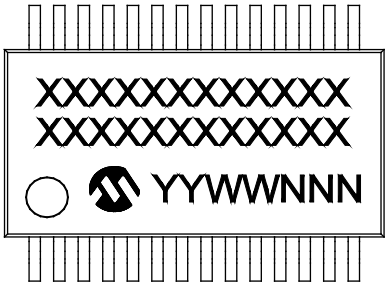

Example

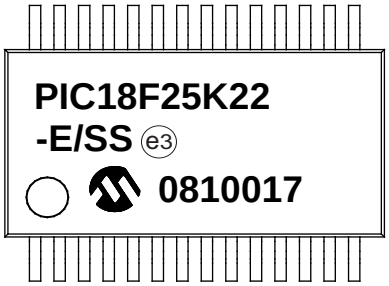

Legend:	XX...X	Customer-specific information or Microchip part number
	Y	Year code (last digit of calendar year)
	YY	Year code (last 2 digits of calendar year)
	WW	Week code (week of January 1 is week ‘01’)
	NNN	Alphanumeric traceability code
	e3	Pb-free JEDEC® designator for Matte Tin (Sn)
	*	This package is Pb-free. The Pb-free JEDEC designator (e3) can be found on the outer packaging for this package.

Note: In the event the full Microchip part number cannot be marked on one line, it will be carried over to the next line, thus limiting the number of available characters for customer-specific information.

Package Marking Information (Continued)

28-Lead QFN (6x6 mm)

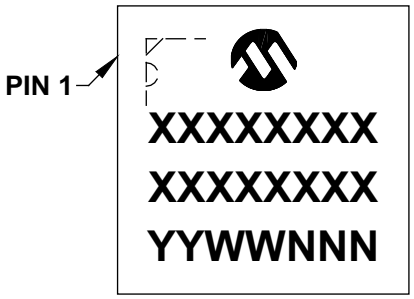

Example

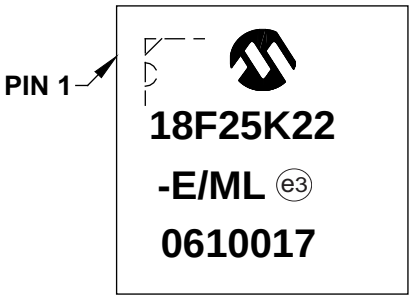

28-Lead UQFN (4x4x0.5 mm)

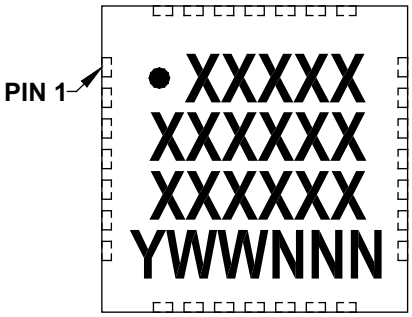

Example

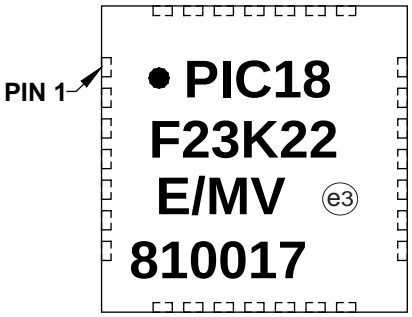

40-Lead PDIP (600 mil)

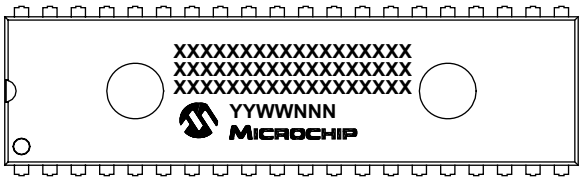

Example

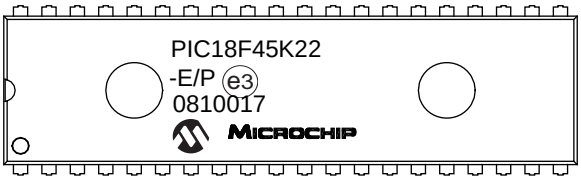

Legend:	XX...X	Customer-specific information or Microchip part number
	Y	Year code (last digit of calendar year)
	YY	Year code (last 2 digits of calendar year)
	WW	Week code (week of January 1 is week ‘01’)
	NNN	Alphanumeric traceability code
	e3	Pb-free JEDEC® designator for Matte Tin (Sn)
	*	This package is Pb-free. The Pb-free JEDEC designator (e3) can be found on the outer packaging for this package.

Note: In the event the full Microchip part number cannot be marked on one line, it will be carried over to the next line, thus limiting the number of available characters for customer-specific information.

© 2010-2016 Microchip Technology Inc.

Package Marking Information (Continued)

40-Lead UQFN (5x5x0.5 mm)

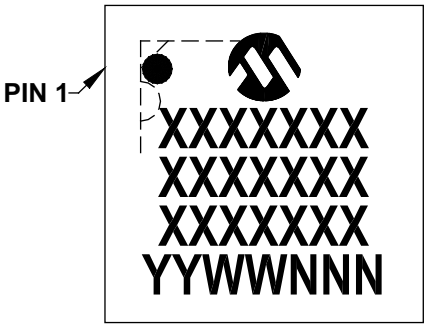

Example

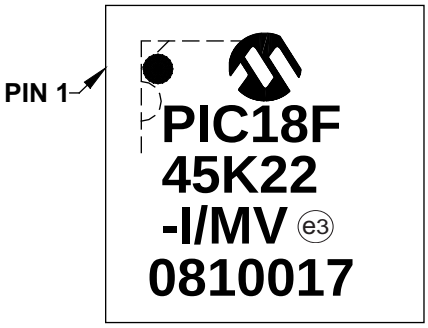

44-Lead QFN (8x8x0.9 mm)

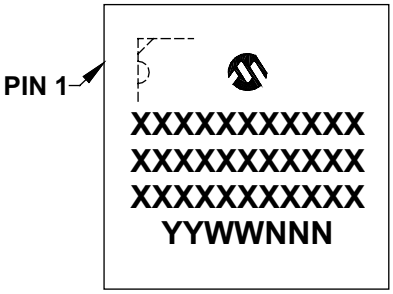

Example

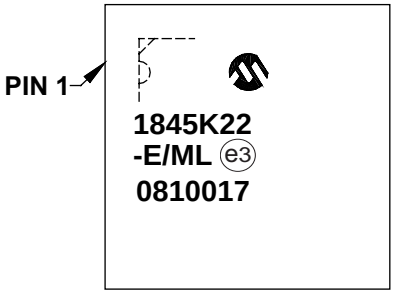

44-Lead TQFP (10x10x1 mm)

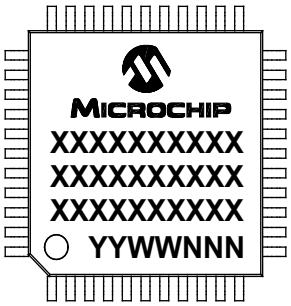

Example

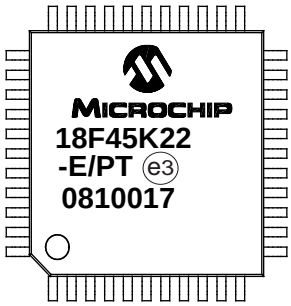

Legend:	XX...X	Customer-specific information or Microchip part number
	Y	Year code (last digit of calendar year)
	YY	Year code (last 2 digits of calendar year)
	WW	Week code (week of January 1 is week ‘01’)
	NNN	Alphanumeric traceability code
	e3	Pb-free JEDEC® designator for Matte Tin (Sn)
	*	This package is Pb-free. The Pb-free JEDEC designator (e3) can be found on the outer packaging for this package.

Note: In the event the full Microchip part number cannot be marked on one line, it will be carried over to the next line, thus limiting the number of available characters for customer-specific information.

29.2 Package Details

The following sections give the technical details of the packages.

28-Lead Skinny Plastic Dual In-Line (SP) – 300 mil Body [SPDIP]

Note: For the most current package drawings, please see the Microchip Packaging Specification located at http://www.microchip.com/packaging

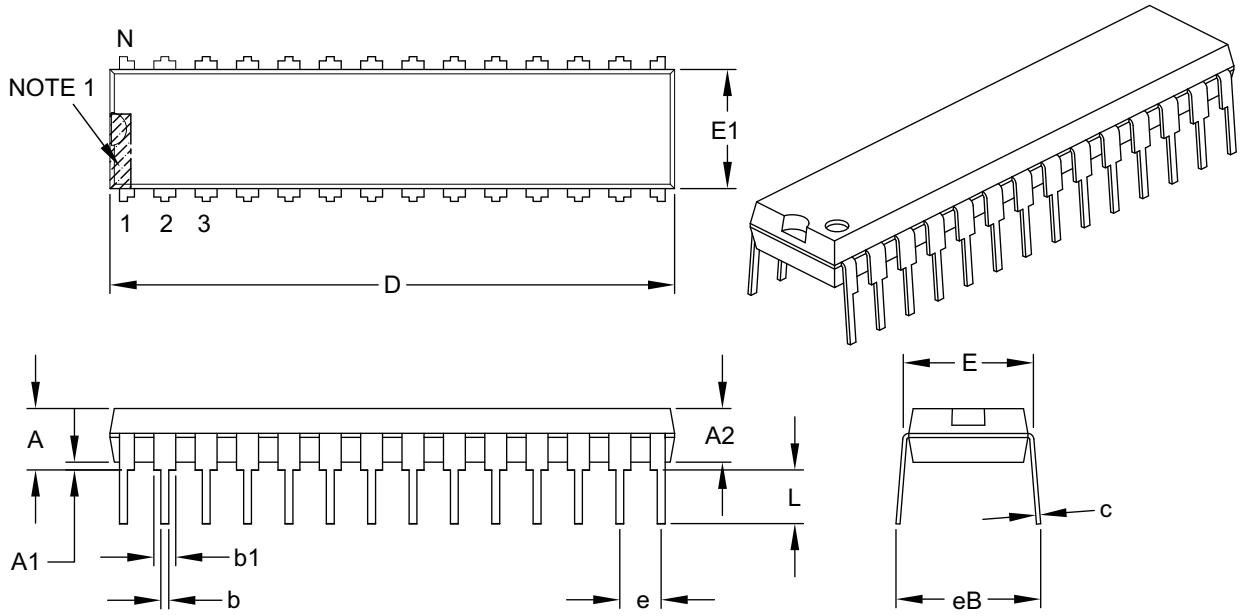

Units		INCHES		
Dimension Limits		MIN	NOM	MAX
Number of Pins	N	28		
Pitch	e	.100 BSC		
Top to Seating Plane	A	–	–	.200
Molded Package Thickness	A2	.120	.135	.150
Base to Seating Plane	A1	.015	–	–
Shoulder to Shoulder Width	E	.290	.310	.335
Molded Package Width	E1	.240	.285	.295
Overall Length	D	1.345	1.365	1.400
Tip to Seating Plane	L	.110	.130	.150
Lead Thickness	c	.008	.010	.015
Upper Lead Width	b1	.040	.050	.070
Lower Lead Width	b	.014	.018	.022
Overall Row Spacing §	eB	–	–	.430

Notes:

1. Pin 1 visual index feature may vary, but must be located within the hatched area.
2. § Significant Characteristic.
3. Dimensions D and E1 do not include mold flash or protrusions. Mold flash or protrusions shall not exceed .010" per side.
4. Dimensioning and tolerancing per ASME Y14.5M.

   BSC: Basic Dimension. Theoretically exact value shown without tolerances.

Microchip Technology Drawing C04-070B

© 2010-2016 Microchip Technology Inc.

28-Lead Plastic Small Outline (SO) - Wide, 7.50 mm Body [SOIC]

Note:	For the most current package drawings, please see the Microchip Packaging Specification located at http://www.microchip.com/packaging

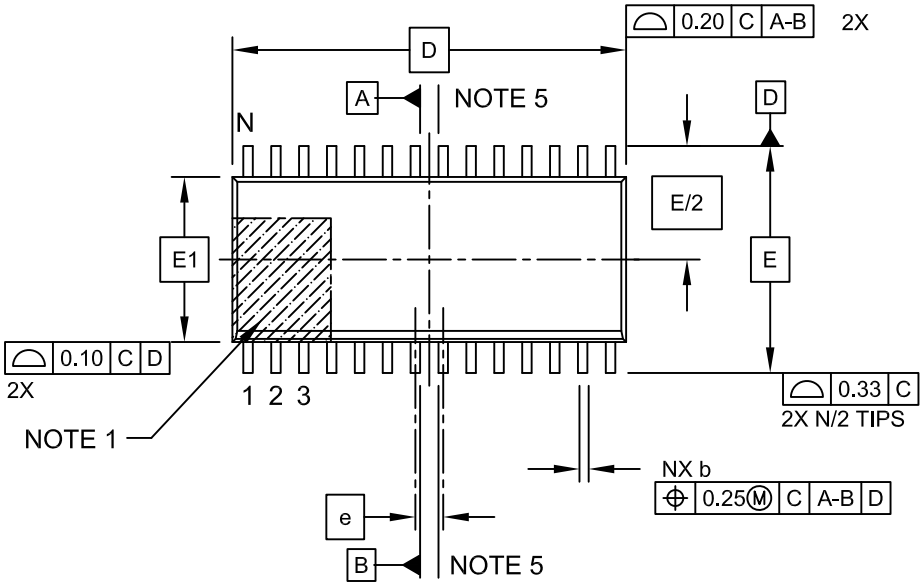

TOP VIEW

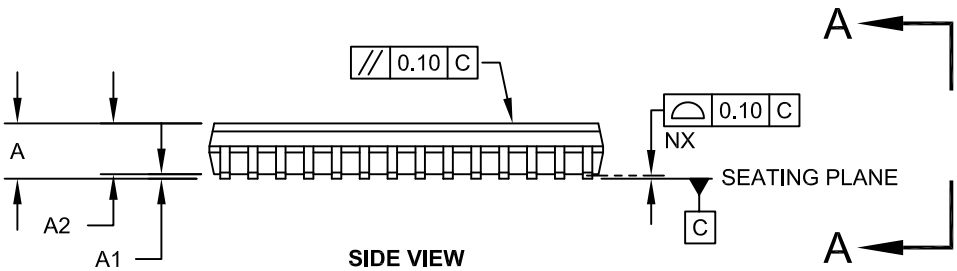

SIDE VIEW

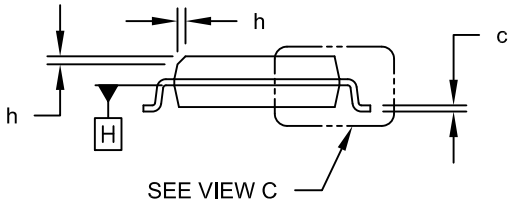

VIEW A-A

Microchip Technology Drawing C04-052C Sheet 1 of 2

28-Lead Plastic Small Outline (SO) - Wide, 7.50 mm Body [SOIC]

Note: For the most current package drawings, please see the Microchip Packaging Specification located at http://www.microchip.com/packaging

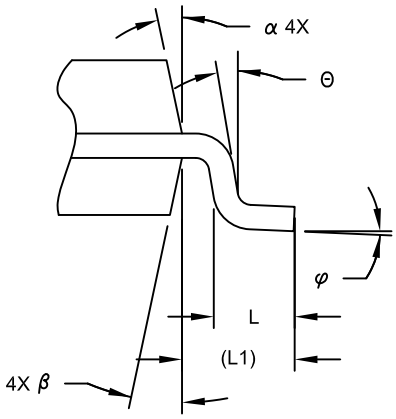

VIEW C

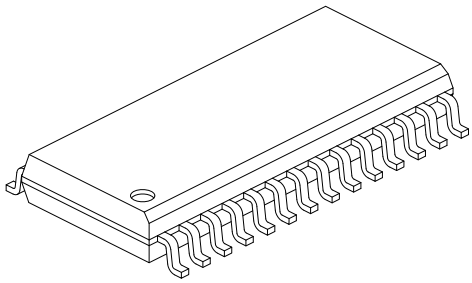

Units		MILLIMETERS		
Dimension Limits		MIN	NOM	MAX
Number of Pins	N	28		
Pitch	e	1.27 BSC		
Overall Height	A	-	-	2.65
Molded Package Thickness	A2	2.05	-	-
Standoff §	A1	0.10	-	0.30
Overall Width	E	10.30 BSC		
Molded Package Width	E1	7.50 BSC		
Overall Length	D	17.90 BSC		
Chamfer (Optional)	h	0.25	-	0.75
Foot Length	L	0.40	-	1.27
Footprint	L1	1.40 REF		
Lead Angle	Θ	0°	-	-
Foot Angle	φ	0°	-	8°
Lead Thickness	c	0.18	-	0.33
Lead Width	b	0.31	-	0.51
Mold Draft Angle Top	α	5°	-	15°
Mold Draft Angle Bottom	β	5°	-	15°

Notes:

1. Pin 1 visual index feature may vary, but must be located within the hatched area.
2. § Significant Characteristic
3. Dimension D does not include mold flash, protrusions or gate burrs, which shall not exceed 0.15 mm per end. Dimension E1 does not include interlead flash or protrusion, which shall not exceed 0.25 mm per side.
4. Dimensioning and tolerancing per ASME Y14.5M
   BSC: Basic Dimension. Theoretically exact value shown without tolerances.
   REF: Reference Dimension, usually without tolerance, for information purposes only.
5. Datums A & B to be determined at Datum H.

Microchip Technology Drawing C04-052C Sheet 2 of 2

© 2010-2016 Microchip Technology Inc.

28-Lead Plastic Small Outline (SO) - Wide, 7.50 mm Body [SOIC]

Note: For the most current package drawings, please see the Microchip Packaging Specification located at http://www.microchip.com/packaging

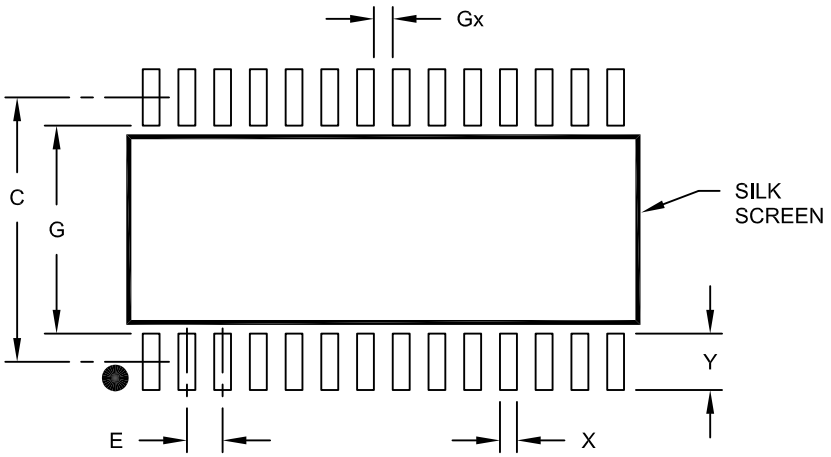

RECOMMENDED LAND PATTERN

Units		MILLIMETERS		
Dimension Limits		MIN	NOM	MAX
Contact Pitch	E		1.27 BSC	
Contact Pad Spacing	C		9.40	
Contact Pad Width (X28)	X			0.60
Contact Pad Length (X28)	Y			2.00
Distance Between Pads	Gx	0.67		
Distance Between Pads	G	7.40		

Notes:

1. Dimensioning and tolerancing per ASME Y14.5M

BSC: Basic Dimension. Theoretically exact value shown without tolerances.

Microchip Technology Drawing No. C04-2052A

28-Lead Plastic Shrink Small Outline (SS) – 5.30 mm Body [SSOP]

Note: For the most current package drawings, please see the Microchip Packaging Specification located at http://www.microchip.com/packaging

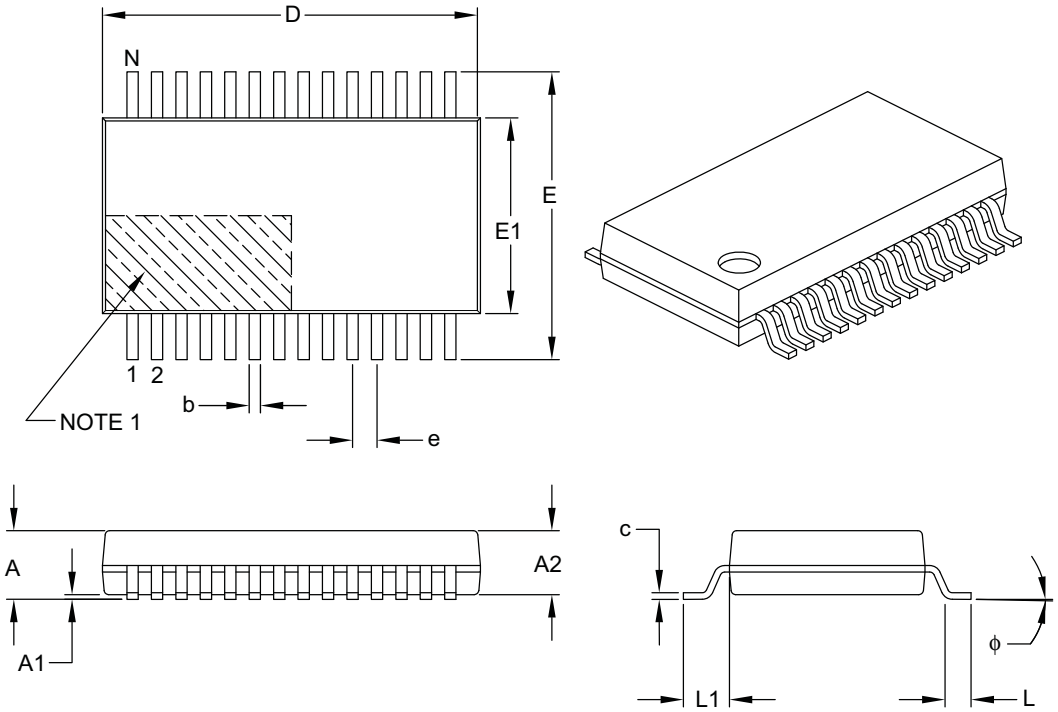

Units		MILLIMETERS		
Dimension Limits		MIN	NOM	MAX
Number of Pins	N	28		
Pitch	e	0.65 BSC		
Overall Height	A	–	–	2.00
Molded Package Thickness	A2	1.65	1.75	1.85
Standoff	A1	0.05	–	–
Overall Width	E	7.40	7.80	8.20
Molded Package Width	E1	5.00	5.30	5.60
Overall Length	D	9.90	10.20	10.50
Foot Length	L	0.55	0.75	0.95
Footprint	L1	1.25 REF		
Lead Thickness	c	0.09	–	0.25
Foot Angle	ϕ	0°	4°	8°
Lead Width	b	0.22	–	0.38

Notes:

1. Pin 1 visual index feature may vary, but must be located within the hatched area.
2. Dimensions D and E1 do not include mold flash or protrusions. Mold flash or protrusions shall not exceed 0.20 mm per side.
3. Dimensioning and tolerancing per ASME Y14.5M.

   BSC: Basic Dimension. Theoretically exact value shown without tolerances.
   REF: Reference Dimension, usually without tolerance, for information purposes only.

Microchip Technology Drawing C04-073B

© 2010-2016 Microchip Technology Inc.

28-Lead Plastic Shrink Small Outline (SS) - 5.30 mm Body [SSOP]

Note: For the most current package drawings, please see the Microchip Packaging Specification located at http://www.microchip.com/packaging

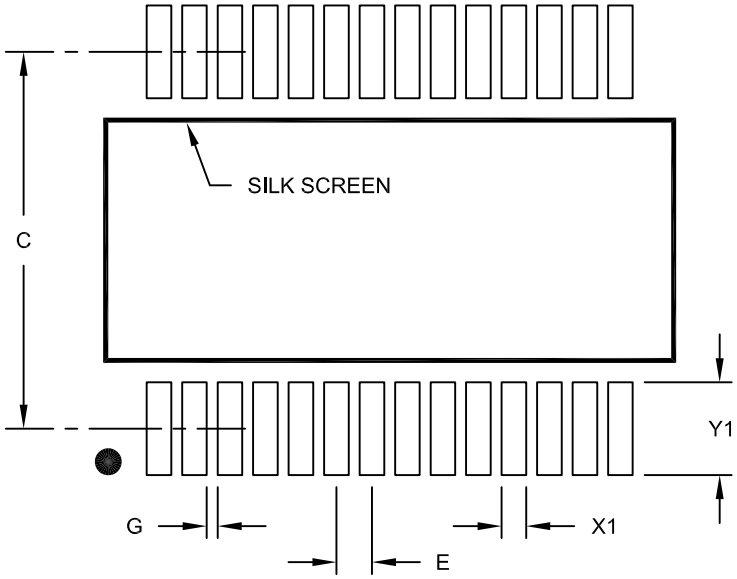

RECOMMENDED LAND PATTERN

Units		MILLIMETERS		
Dimension Limits		MIN	NOM	MAX
Contact Pitch	E		0.65 BSC	
Contact Pad Spacing	C		7.20	
Contact Pad Width (X28)	X1			0.45
Contact Pad Length (X28)	Y1			1.75
Distance Between Pads	G	0.20		

Notes:

1. Dimensioning and tolerancing per ASME Y14.5M

BSC: Basic Dimension. Theoretically exact value shown without tolerances.

Microchip Technology Drawing No. C04-2073A

28-Lead Plastic Quad Flat, No Lead Package (ML) - 6x6 mm Body [QFN] With 0.55 mm Terminal Length

Note: For the most current package drawings, please see the Microchip Packaging Specification located at http://www.microchip.com/packaging

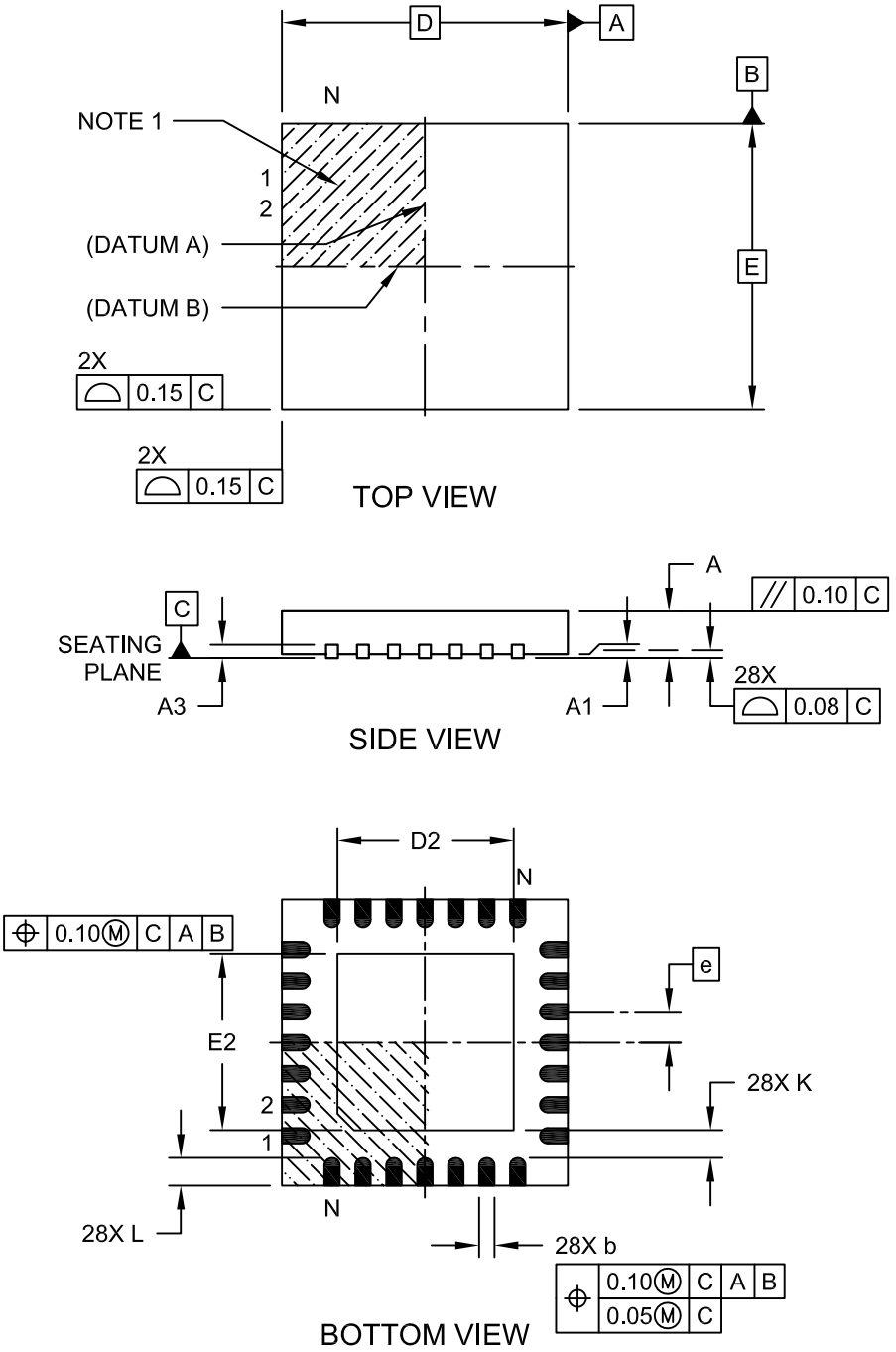

Microchip Technology Drawing C04-105C Sheet 1 of 2

© 2010-2016 Microchip Technology Inc.

28-Lead Plastic Quad Flat, No Lead Package (ML) - 6x6 mm Body [QFN] With 0.55 mm Terminal Length

Note: For the most current package drawings, please see the Microchip Packaging Specification located at http://www.microchip.com/packaging

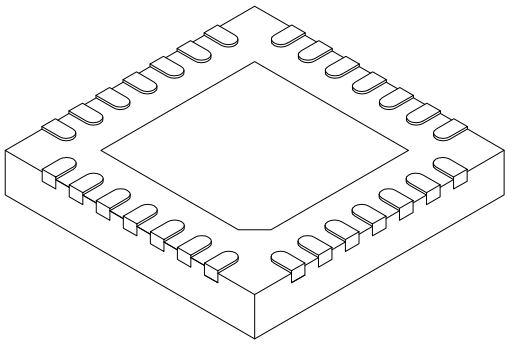

	Units	MILLIMETERS		
Dimension	Limits	MIN	NOM	MAX
Number of Pins	N	28		
Pitch	e	0.65 BSC		
Overall Height	A	0.80	0.90	1.00
Standoff	A1	0.00	0.02	0.05
Terminal Thickness	A3	0.20 REF		
Overall Width	E	6.00 BSC		
Exposed Pad Width	E2	3.65	3.70	4.20
Overall Length	D	6.00 BSC		
Exposed Pad Length	D2	3.65	3.70	4.20
Terminal Width	b	0.23	0.30	0.35
Terminal Length	L	0.50	0.55	0.70
Terminal-to-Exposed Pad	K	0.20	-	-

Notes:

1. Pin 1 visual index feature may vary, but must be located within the hatched area.
2. Package is saw singulated
3. Dimensioning and tolerancing per ASME Y14.5M.
   BSC: Basic Dimension. Theoretically exact value shown without tolerances.
   REF: Reference Dimension, usually without tolerance, for information purposes only.

Microchip Technology Drawing C04-105C Sheet 2 of 2

28-Lead Plastic Quad Flat, No Lead Package (ML) – 6x6 mm Body [QFN] with 0.55 mm Contact Length

Note: For the most current package drawings, please see the Microchip Packaging Specification located at http://www.microchip.com/packaging

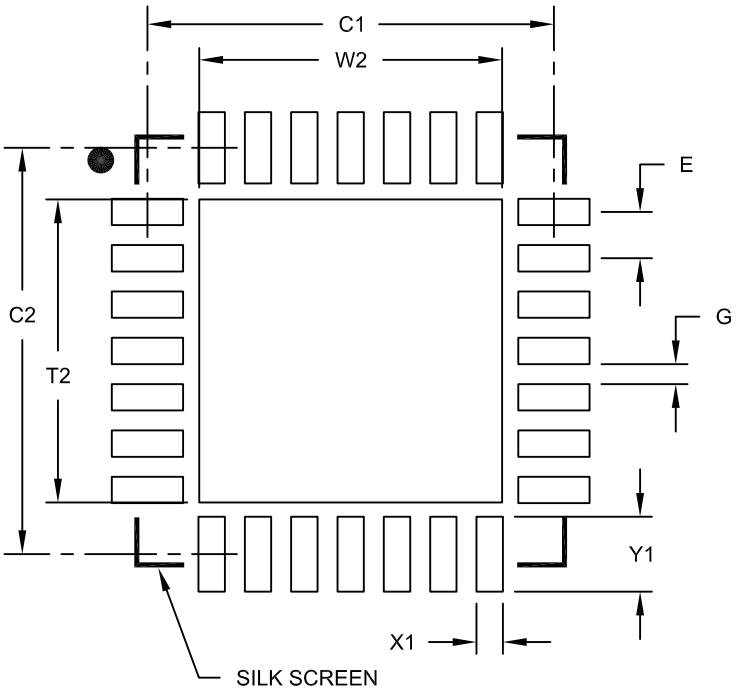

RECOMMENDED LAND PATTERN

Units		MILLIMETERS		
Dimension Limits		MIN	NOM	MAX
Contact Pitch	E		0.65 BSC	
Optional Center Pad Width	W2			4.25
Optional Center Pad Length	T2			4.25
Contact Pad Spacing	C1		5.70	
Contact Pad Spacing	C2		5.70	
Contact Pad Width (X28)	X1			0.37
Contact Pad Length (X28)	Y1			1.00
Distance Between Pads	G	0.20		

Notes:

1. Dimensioning and tolerancing per ASME Y14.5M
   BSC: Basic Dimension. Theoretically exact value shown without tolerances.

Microchip Technology Drawing No. C04-2105A

© 2010-2016 Microchip Technology Inc.

28-Lead Plastic Ultra Thin Quad Flat, No Lead Package (MV) – 4x4x0.5 mm Body [UQFN]

Note: For the most current package drawings, please see the Microchip Packaging Specification located at http://www.microchip.com/packaging

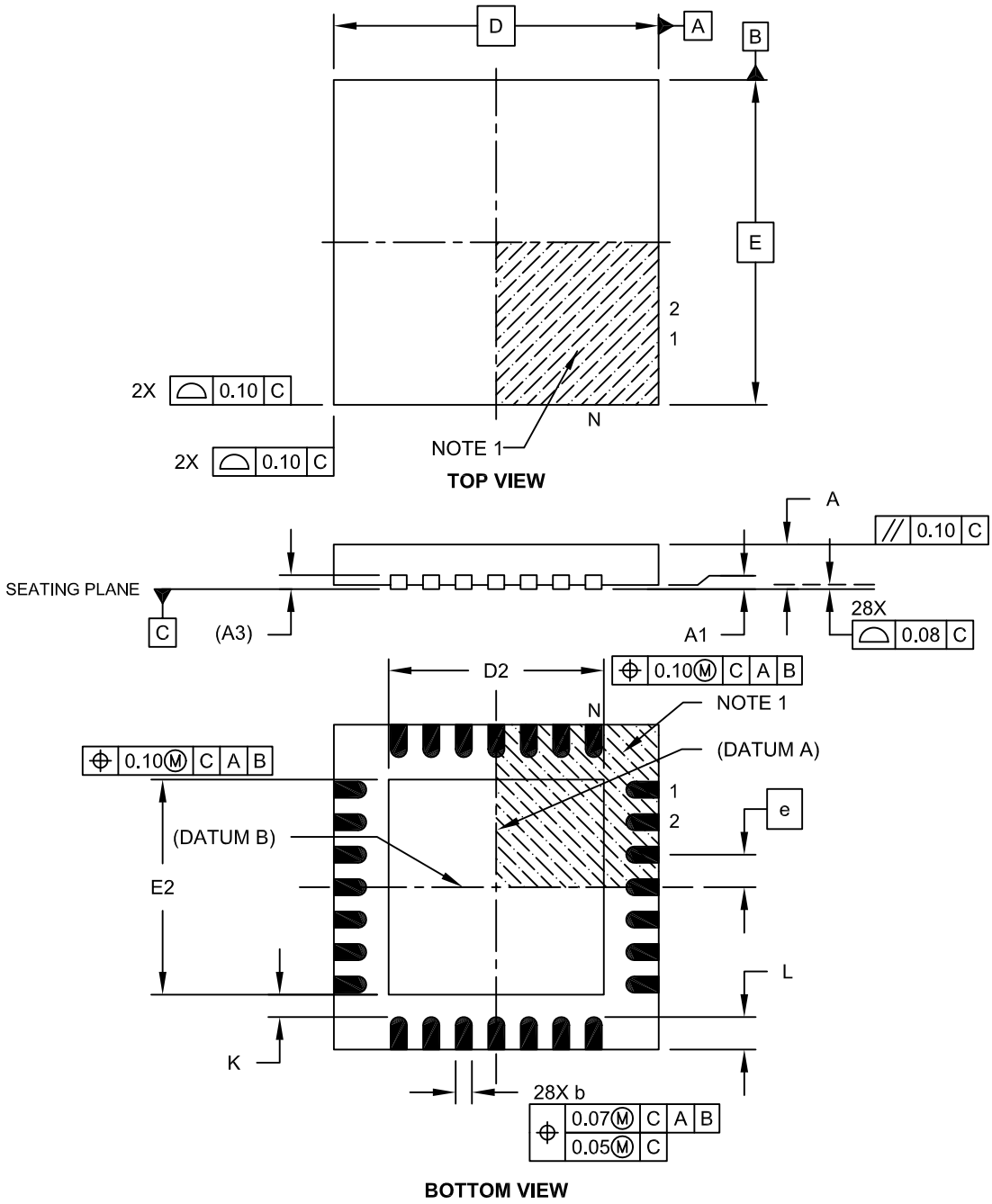

Microchip Technology Drawing C04-152A Sheet 1 of 2

28-Lead Plastic Ultra Thin Quad Flat, No Lead Package (MV) – 4x4x0.5 mm Body [UQFN]

Note: For the most current package drawings, please see the Microchip Packaging Specification located at http://www.microchip.com/packaging

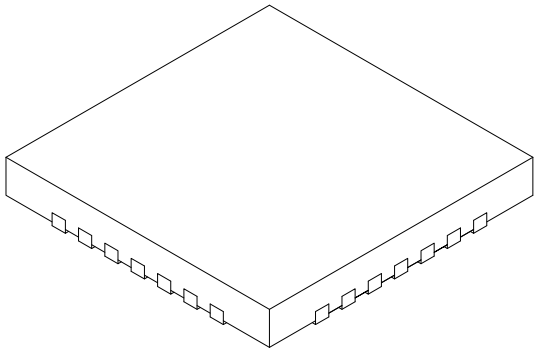

Units		MILLIMETERS		
Dimension Limits		MIN	NOM	MAX
Number of Pins	N	28		
Pitch	e	0.40 BSC		
Overall Height	A	0.45	0.50	0.55
Standoff	A1	0.00	0.02	0.05
Contact Thickness	A3	0.127 REF		
Overall Width	E	4.00 BSC		
Exposed Pad Width	E2	2.55	2.65	2.75
Overall Length	D	4.00 BSC		
Exposed Pad Length	D2	2.55	2.65	2.75
Contact Width	b	0.15	0.20	0.25
Contact Length	L	0.30	0.40	0.50
Contact-to-Exposed Pad	K	0.20	-	-

Notes:

1. Pin 1 visual index feature may vary, but must be located within the hatched area.
2. Package is saw singulated.
3. Dimensioning and tolerancing per ASME Y14.5M.
   BSC: Basic Dimension. Theoretically exact value shown without tolerances.
   REF: Reference Dimension, usually without tolerance, for information purposes only.

Microchip Technology Drawing C04-152A Sheet 2 of 2

© 2010-2016 Microchip Technology Inc.

28-Lead Ultra Thin Plastic Quad Flat, No Lead Package (MV) - 4x4 mm Body [UQFN]
With 0.40 mm Contact Length

Note: For the most current package drawings, please see the Microchip Packaging Specification located at http://www.microchip.com/packaging

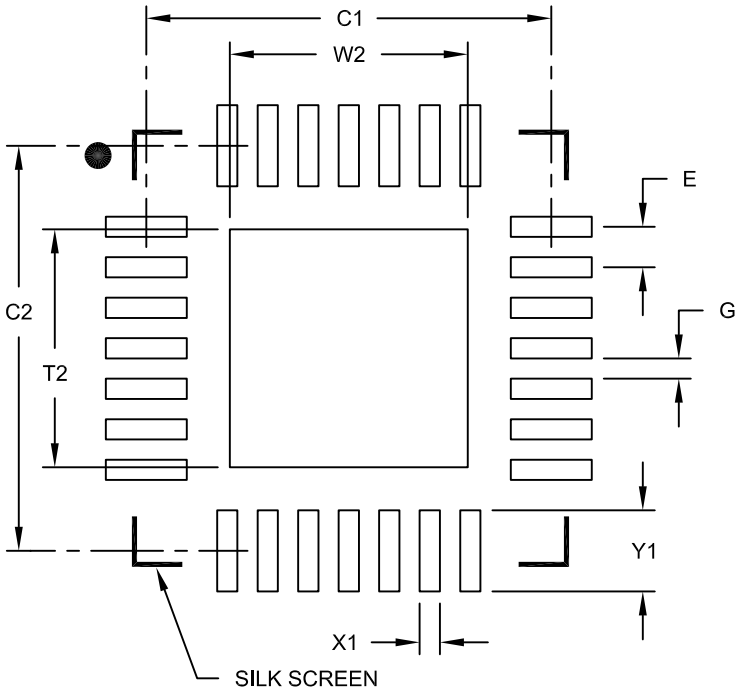

RECOMMENDED LAND PATTERN

Units		MILLIMETERS		
Dimension Limits		MIN	NOM	MAX
Contact Pitch	E		0.40 BSC	
Optional Center Pad Width	W2			2.35
Optional Center Pad Length	T2			2.35
Contact Pad Spacing	C1		4.00	
Contact Pad Spacing	C2		4.00	
Contact Pad Width (X28)	X1			0.20
Contact Pad Length (X28)	Y1			0.80
Distance Between Pads	G	0.20		

Notes:

1. Dimensioning and tolerancing per ASME Y14.5M

BSC: Basic Dimension. Theoretically exact value shown without tolerances.

Microchip Technology Drawing No. C04-2152A

40-Lead Plastic Dual In-Line (P) – 600 mil Body [PDIP]

Note: For the most current package drawings, please see the Microchip Packaging Specification located at http://www.microchip.com/packaging

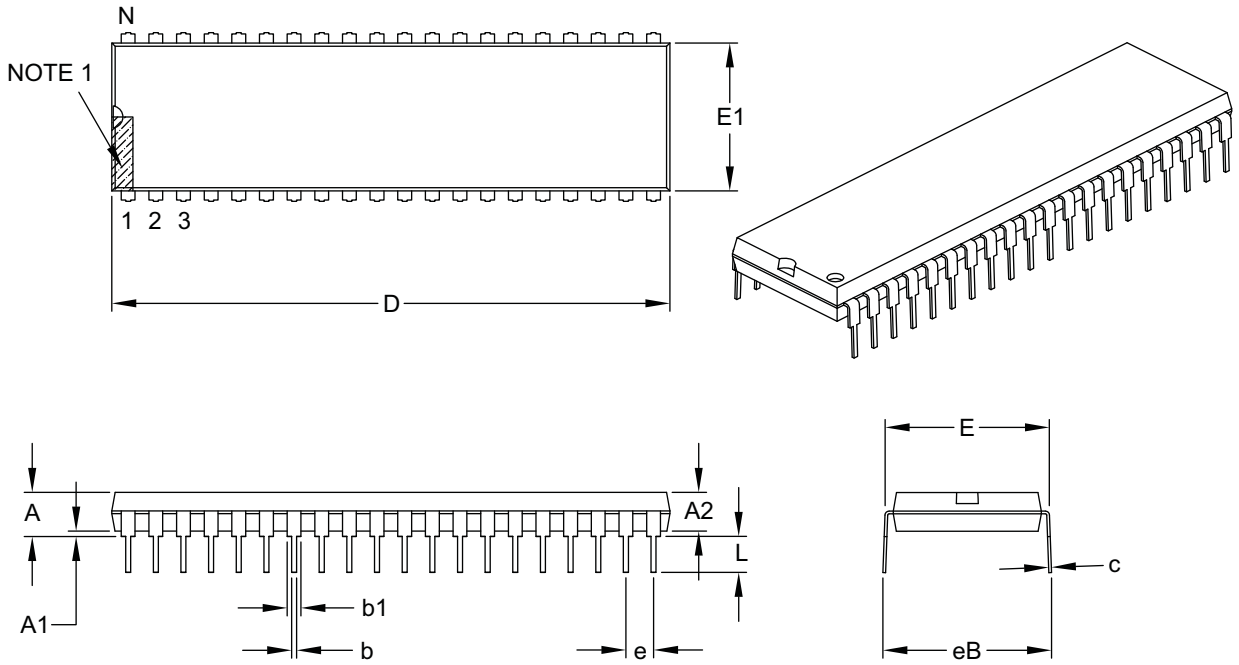

Units		INCHES		
Dimension Limits		MIN	NOM	MAX
Number of Pins	N	40		
Pitch	e	.100 BSC		
Top to Seating Plane	A	–	–	.250
Molded Package Thickness	A2	.125	–	.195
Base to Seating Plane	A1	.015	–	–
Shoulder to Shoulder Width	E	.590	–	.625
Molded Package Width	E1	.485	–	.580
Overall Length	D	1.980	–	2.095
Tip to Seating Plane	L	.115	–	.200
Lead Thickness	c	.008	–	.015
Upper Lead Width	b1	.030	–	.070
Lower Lead Width	b	.014	–	.023
Overall Row Spacing §	eB	–	–	.700

Notes:
1. Pin 1 visual index feature may vary, but must be located within the hatched area.
2. § Significant Characteristic.
3. Dimensions D and E1 do not include mold flash or protrusions. Mold flash or protrusions shall not exceed .010" per side.
4. Dimensioning and tolerancing per ASME Y14.5M.
   BSC: Basic Dimension. Theoretically exact value shown without tolerances.

Microchip Technology Drawing C04-016B

© 2010-2016 Microchip Technology Inc.

40-Lead Ultra Thin Plastic Quad Flat, No Lead Package (MV) – 5x5x0.5 mm Body [UQFN]

Note:	For the most current package drawings, please see the Microchip Packaging Specification located at http://www.microchip.com/packaging

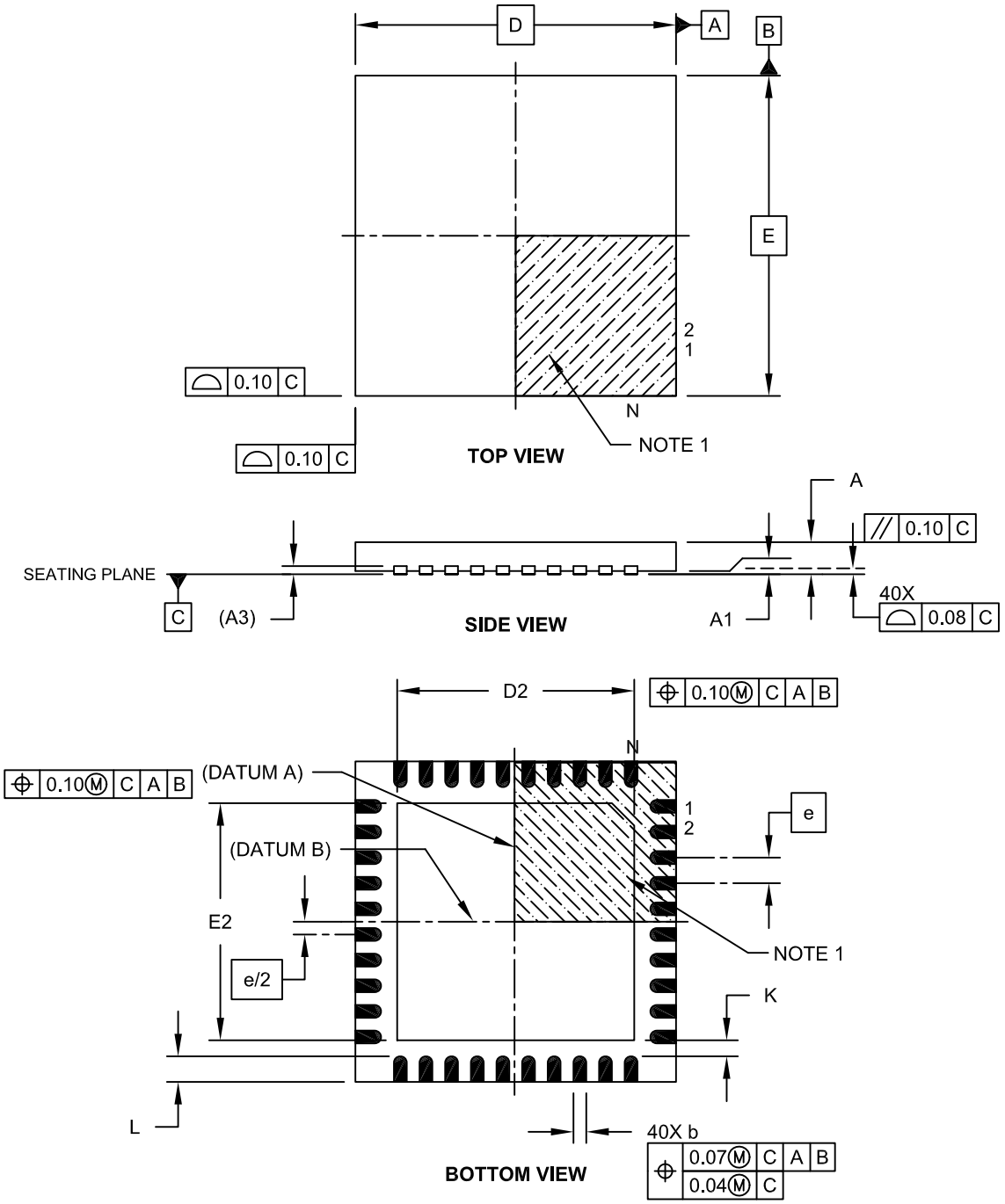

Microchip Technology Drawing C04-156A Sheet 1 of 2

40-Lead Ultra Thin Plastic Quad Flat, No Lead Package (MV) – 5x5x0.5 mm Body [UQFN]

Note: For the most current package drawings, please see the Microchip Packaging Specification located at http://www.microchip.com/packaging

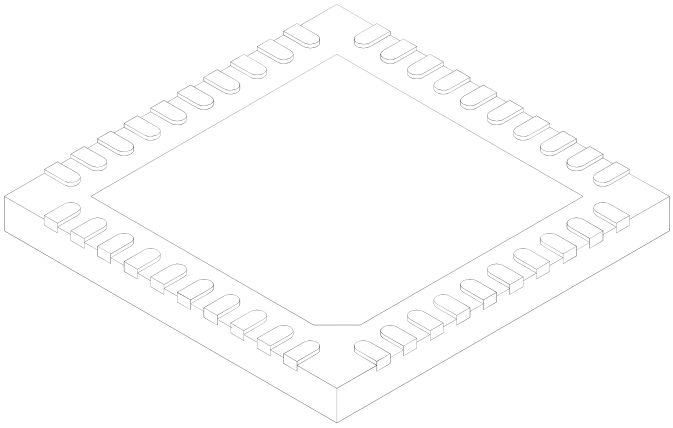

Units		MILLIMETERS		
Dimension Limits		MIN	NOM	MAX
Number of Pins	N	40		
Pitch	e	0.40 BSC		
Overall Height	A	0.45	0.50	0.55
Standoff	A1	0.00	0.02	0.05
Contact Thickness	A3	0.127 REF		
Overall Width	E	5.00 BSC		
Exposed Pad Width	E2	3.60	3.70	3.80
Overall Length	D	5.00 BSC		
Exposed Pad Length	D2	3.60	3.70	3.80
Contact Width	b	0.15	0.20	0.25
Contact Length	L	0.30	0.40	0.50
Contact-to-Exposed Pad	K	0.20	-	-

Notes:

1. Pin 1 visual index feature may vary, but must be located within the hatched area.
2. Package is saw singulated.
3. Dimensioning and tolerancing per ASME Y14.5M.
   BSC: Basic Dimension. Theoretically exact value shown without tolerances.
   REF: Reference Dimension, usually without tolerance, for information purposes only.

Microchip Technology Drawing C04-156A Sheet 2 of 2

© 2010-2016 Microchip Technology Inc.

40-Lead Plastic Ultra Thin Quad Flat, No Lead Package (MV) - 5x5 mm Body [UQFN]

Note: For the most current package drawings, please see the Microchip Packaging Specification located at http://www.microchip.com/packaging

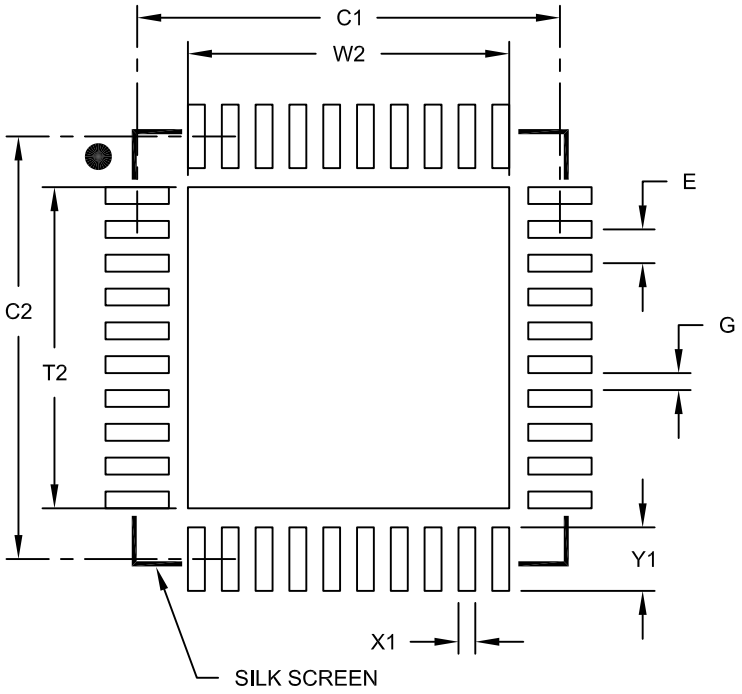

RECOMMENDED LAND PATTERN

Units		MILLIMETERS		
Dimension Limits		MIN	NOM	MAX
Contact Pitch	E		0.40 BSC	
Optional Center Pad Width	W2			3.80
Optional Center Pad Length	T2			3.80
Contact Pad Spacing	C1		5.00	
Contact Pad Spacing	C2		5.00	
Contact Pad Width (X40)	X1			0.20
Contact Pad Length (X40)	Y1			0.75
Distance Between Pads	G	0.20		

Notes:

1. Dimensioning and tolerancing per ASME Y14.5M

   BSC: Basic Dimension. Theoretically exact value shown without tolerances.

Microchip Technology Drawing No. C04-2156B

44-Lead Plastic Quad Flat, No Lead Package (ML) - 8x8 mm Body [QFN or VQFN]

Note: For the most current package drawings, please see the Microchip Packaging Specification located at http://www.microchip.com/packaging

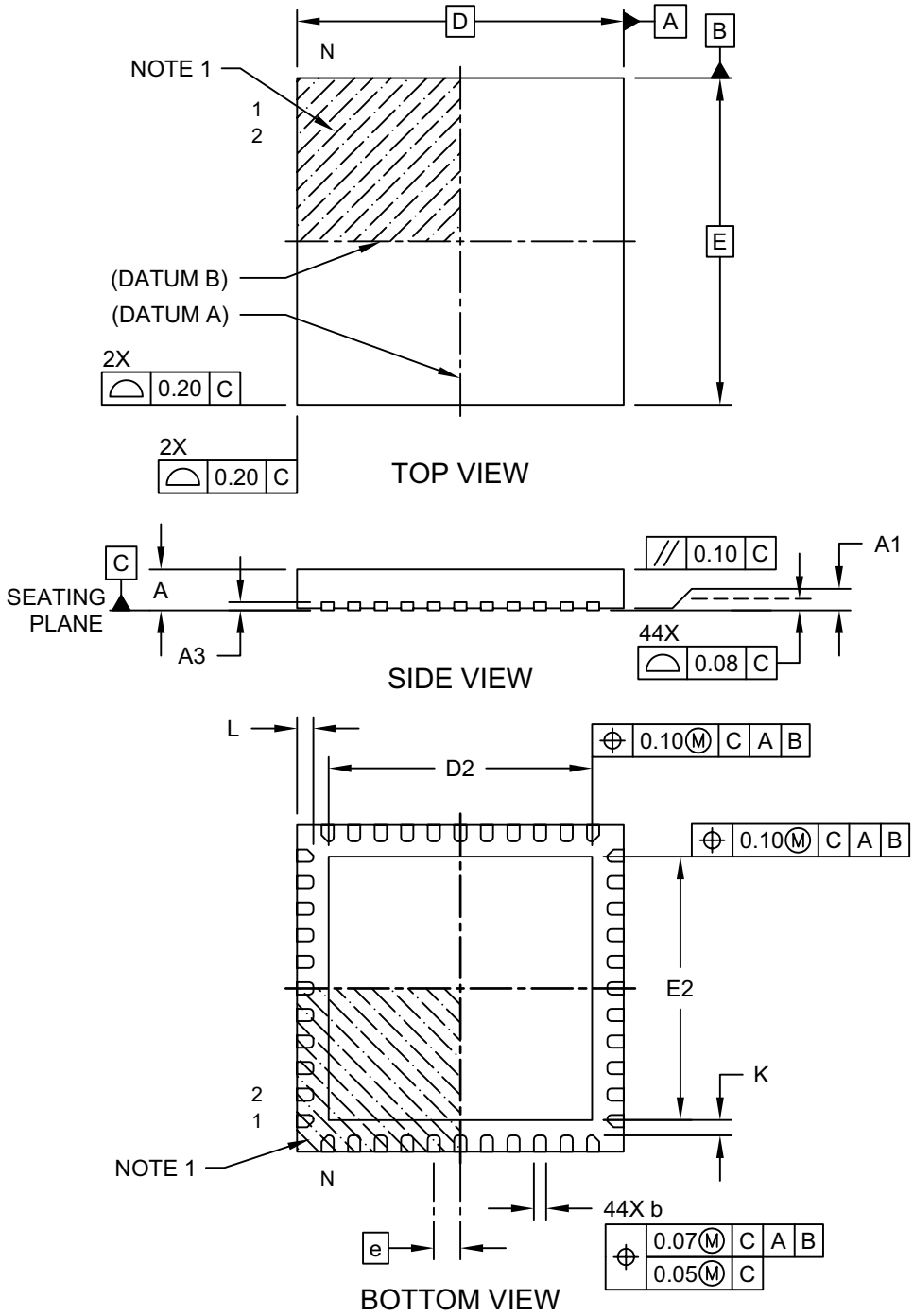

Microchip Technology Drawing C04-103D Sheet 1 of 2

© 2010-2016 Microchip Technology Inc.

44-Lead Plastic Quad Flat, No Lead Package (ML) - 8x8 mm Body [QFN or VQFN]

Note: For the most current package drawings, please see the Microchip Packaging Specification located at http://www.microchip.com/packaging

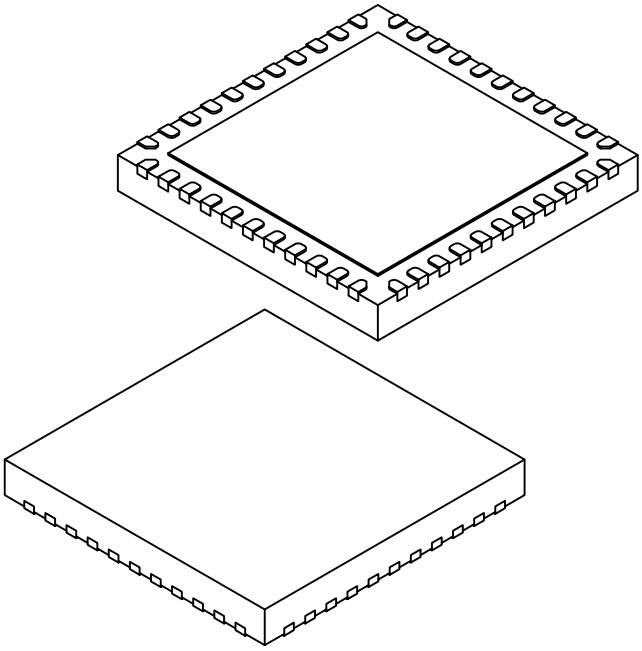

Units		MILLIMETERS		
Dimension Limits		MIN	NOM	MAX
Number of Pins	N	44		
Pitch	e	0.65 BSC		
Overall Height	A	0.80	0.90	1.00
Standoff	A1	0.00	0.02	0.05
Terminal Thickness	A3	0.20 REF		
Overall Width	E	8.00 BSC		
Exposed Pad Width	E2	6.25	6.45	6.60
Overall Length	D	8.00 BSC		
Exposed Pad Length	D2	6.25	6.45	6.60
Terminal Width	b	0.20	0.30	0.35
Terminal Length	L	0.30	0.40	0.50
Terminal-to-Exposed-Pad	K	0.20	-	-

Notes:

1. Pin 1 visual index feature may vary, but must be located within the hatched area.
2. Package is saw singulated
3. Dimensioning and tolerancing per ASME Y14.5M

   BSC: Basic Dimension. Theoretically exact value shown without tolerances.

   REF: Reference Dimension, usually without tolerance, for information purposes only.

Microchip Technology Drawing C04-103D Sheet 2 of 2

44-Lead Plastic Quad Flat, No Lead Package (ML) - 8x8 mm Body [QFN or VQFN]

Note: For the most current package drawings, please see the Microchip Packaging Specification located at http://www.microchip.com/packaging

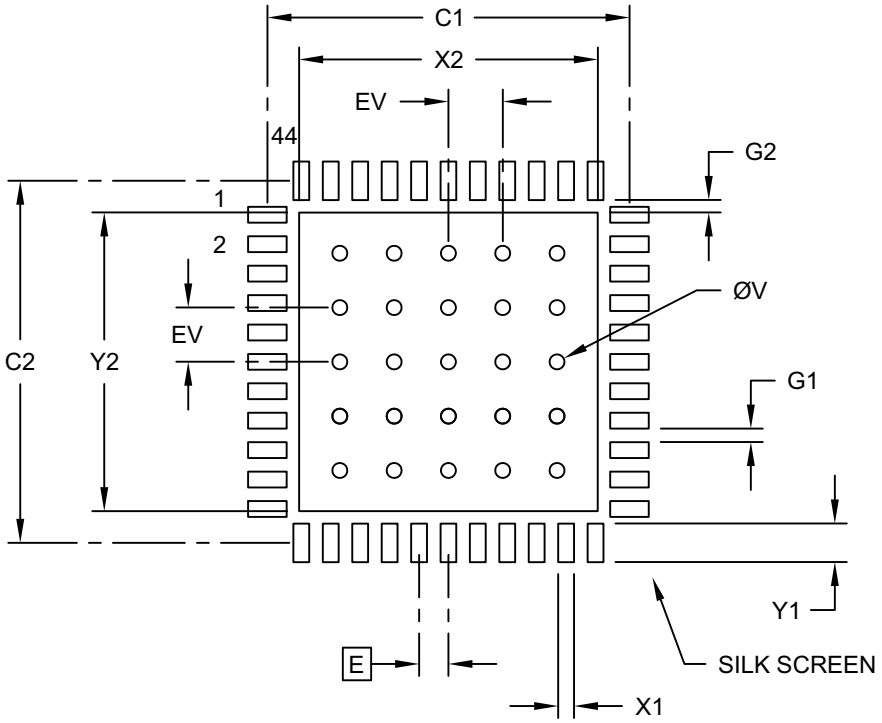

RECOMMENDED LAND PATTERN

Units		MILLIMETERS		
Dimension Limits		MIN	NOM	MAX
Contact Pitch	E	0.65 BSC		
Optional Center Pad Width	X2			6.60
Optional Center Pad Length	Y2			6.60
Contact Pad Spacing	C1		8.00	
Contact Pad Spacing	C2		8.00	
Contact Pad Width (X44)	X1			0.35
Contact Pad Length (X44)	Y1			0.85
Contact Pad to Contact Pad (X40)	G1	0.30		
Contact Pad to Center Pad (X44)	G2	0.28		
Thermal Via Diameter	V		0.33	
Thermal Via Pitch	EV		1.20	

Notes:

1. Dimensioning and tolerancing per ASME Y14.5M
   BSC: Basic Dimension. Theoretically exact value shown without tolerances.
2. For best soldering results, thermal vias, if used, should be filled or tented to avoid solder loss during reflow process

Microchip Technology Drawing No. C04-2103C

© 2010-2016 Microchip Technology Inc.

44-Lead Plastic Thin Quad Flatpack (PT) - 10x10x1.0 mm Body [TQFP]

Note: For the most current package drawings, please see the Microchip Packaging Specification located at http://www.microchip.com/packaging

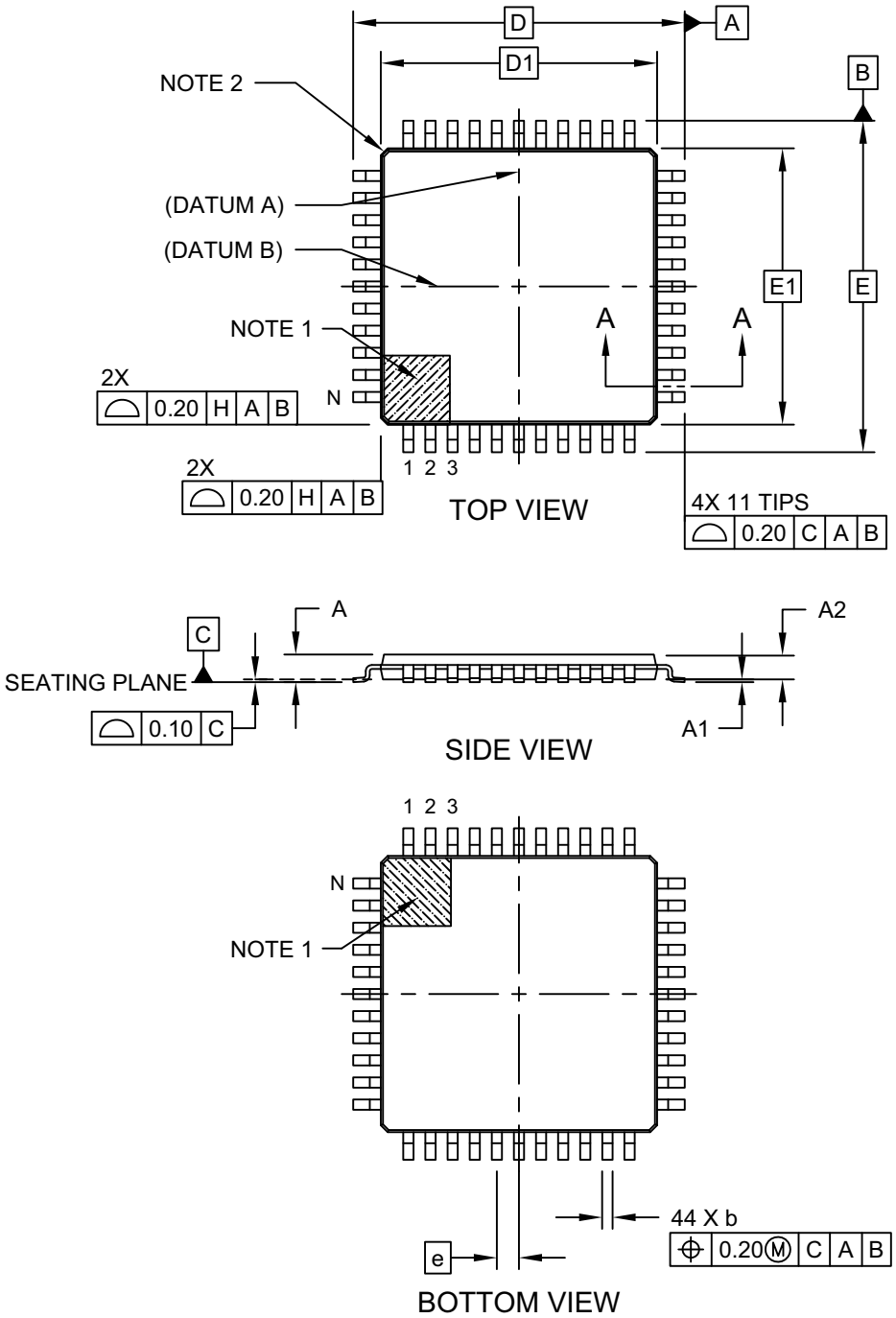

Microchip Technology Drawing C04-076C Sheet 1 of 2

44-Lead Plastic Thin Quad Flatpack (PT) - 10x10x1.0 mm Body [TQFP]

Note: For the most current package drawings, please see the Microchip Packaging Specification located at http://www.microchip.com/packaging

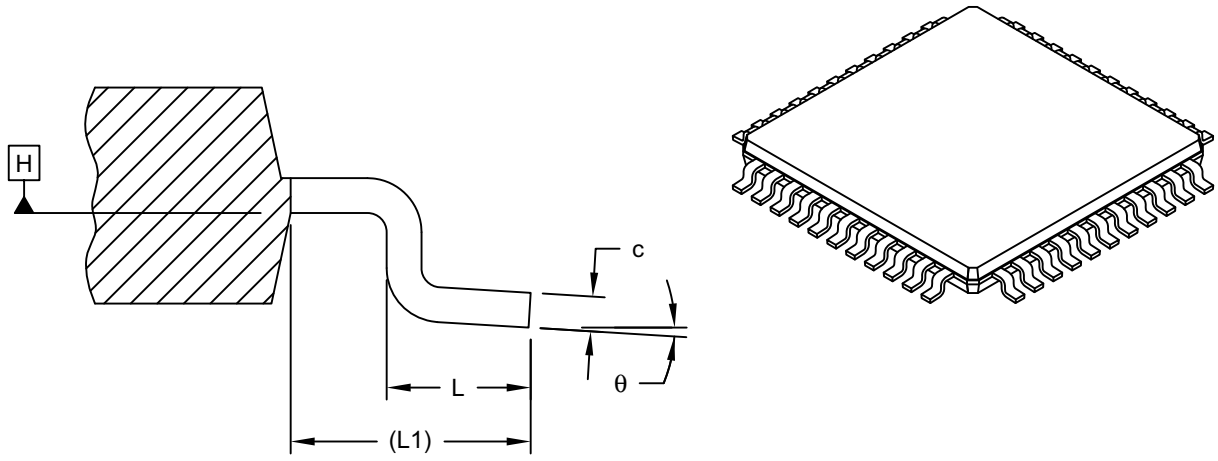

SECTION A-A

Units		MILLIMETERS		
Dimension Limits		MIN	NOM	MAX
Number of Leads	N	44		
Lead Pitch	e	0.80 BSC		
Overall Height	A	-	-	1.20
Standoff	A1	0.05	-	0.15
Molded Package Thickness	A2	0.95	1.00	1.05
Overall Width	E	12.00 BSC		
Molded Package Width	E1	10.00 BSC		
Overall Length	D	12.00 BSC		
Molded Package Length	D1	10.00 BSC		
Lead Width	b	0.30	0.37	0.45
Lead Thickness	c	0.09	-	0.20
Lead Length	L	0.45	0.60	0.75
Footprint	L1	1.00 REF		
Foot Angle	θ	0°	3.5°	7°

Notes:

1. Pin 1 visual index feature may vary, but must be located within the hatched area.
2. Exact shape of each corner is optional.
3. Dimensioning and tolerancing per ASME Y14.5M
   BSC: Basic Dimension. Theoretically exact value shown without tolerances.
   REF: Reference Dimension, usually without tolerance, for information purposes only.

Microchip Technology Drawing C04-076C Sheet 2 of 2

© 2010-2016 Microchip Technology Inc.

44-Lead Plastic Thin Quad Flatpack (PT) 10X10X1 mm Body, 2.00 mm Footprint [TQFP]

Note: For the most current package drawings, please see the Microchip Packaging Specification located at http://www.microchip.com/packaging

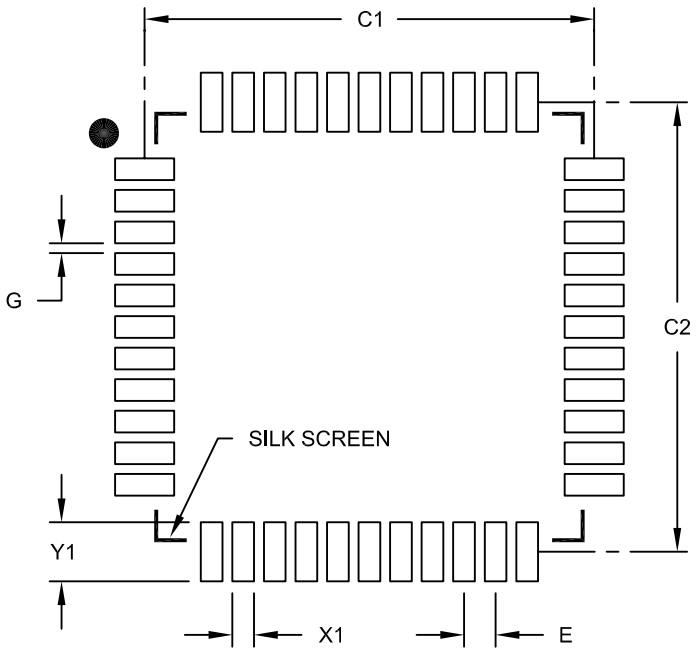

RECOMMENDED LAND PATTERN

Units		MILLIMETERS		
Dimension Limits		MIN	NOM	MAX
Contact Pitch	E		0.80 BSC	
Contact Pad Spacing	C1		11.40	
Contact Pad Spacing	C2		11.40	
Contact Pad Width (X44)	X1			0.55
Contact Pad Length (X44)	Y1			1.50
Distance Between Pads	G	0.25		

Notes:

1. Dimensioning and tolerancing per ASME Y14.5M

BSC: Basic Dimension. Theoretically exact value shown without tolerances.

Microchip Technology Drawing No. C04-2076B

APPENDIX A: REVISION HISTORY

Revision A (February 2010)

Initial release of this document.

Revision B (April 2010)

Updated Figures 2-4, 12-1 and 18-2; Updated Registers 2-2, 10-4, 10-5, 10-7, 17-2, 24-1 and 24-5; Updated Sections 10.3.2, 18.8.4, Synchronizing Comparator Output to Timer1; Updated Sections 27.2, 27-3, 27-4, 27-5, 27-6, 27-7 and 27-9; Updated Tables 27-2, 27-3, 27-4 and 27-7; Other minor corrections.

Revision C (July 2010)

Added 40-pin UQFN diagram; Updated Table 2 and Table 1-3 to add 40-UQFN column; Updated Table 1-1 to add “40-pin UQFN”; Updated Figure 27-1; Added Figure 27-2; Updated Table 27-6; Added 40-Lead UQFN Package Marking Information and Details; Updated Packaging Information section; Updated Table B-1 to add “40-pin UQFN”; Updated Product Identification System section; Other minor corrections.

Revision D (November 2010)

Updated the data sheet to new format; Revised Tables 1-2, 1-3, 5-2, 10-1, 10-5, 10-6, 10-8, 10-9, 10-11, 10-14, 14-13 and Register 14-5; Updated the Electrical Characteristics section.

Revision E (January 2012)

Updated Section 2.5.2, EC Mode; Updated Table 3-2; Removed Table 3-3; Updated Section 14.4.8; Removed CM2CON Register; Updated the Electrical Characteristics section; Updated the Packaging Information section; Updated the Char. Data section; Other minor corrections.

Revision F (May 2012)

Minor corrections; release of Final data sheet.

Revision G (August 2016)

Minor corrections to Tables 1-2, 17-1, 27-11, 27-14, 27-22, Section 2.6.1, Example 7-3, Registers 9-4, 9-5, 9-11, 14-5, Figures 10-1, 17-3, 17-4, 27-23; Updated Packaging Information Section.

© 2010-2016 Microchip Technology Inc.

APPENDIX B: DEVICE DIFFERENCES

The differences between the devices listed in this data sheet are shown in Table B-1.

TABLE B-1: DEVICE DIFFERENCES

Features(1)	PIC18F23K22 PIC18LF23K22	PIC18F24K22 PIC18LF24K22	PIC18F25K22 PIC18LF25K22	PIC18F26K22 PIC18LF26K22	PIC18F43K22 PIC18LF43K22	PIC18F44K22 PIC18LF44K22	PIC18F45K22 PIC18LF45K22	PIC18F46K22 PIC18LF46K22
Program Memory (Bytes)	8192	16384	32768	65536	8192	16384	32768	65536
SRAM (Bytes)	512	768	1536	3896	512	768	1536	3896
EEPROM (Bytes)	256	256	256	1024	256	256	256	1024
Interrupt Sources	26	26	33	33	26	26	33	33
I/O Ports	Ports A, B, C, (E)	Ports A, B, C, (E)	Ports A, B, C, (E)	Ports A, B, C, (E)	Ports A, B, C, D, E	Ports A, B, C, D, E	Ports A, B, C, D, E	Ports A, B, C, D, E
Capture/Compare/PWM Modules (CCP)	2	2	2	2	2	2	2	2
Enhanced CCP Modules (ECCP) Full Bridge	1	1	1	1	2	2	2	2
ECCP Module Half Bridge	2	2	2	2	1	1	1	1
10-bit Analog-to-Digital Module	17 input channels	17 input channels	17 input channels	17 input channels	28 input channels	28 input channels	28 input channels	28 input channels
Packages	28-pin PDIP 28-pin SOIC 28-pin SSOP 28-pin QFN 28-pin UQFN	28-pin PDIP 28-pin SOIC 28-pin SSOP 28-pin QFN 28-pin UQFN	28-pin PDIP 28-pin SOIC 28-pin SSOP 28-pin QFN	28-pin PDIP 28-pin SOIC 28-pin SSOP 28-pin QFN	40-pin PDIP 40-pin UQFN 44-pin TQFP 44-pin QFN	40-pin PDIP 40-pin UQFN 44-pin TQFP 44-pin QFN	40-pin PDIP 40-pin UQFN 44-pin TQFP 44-pin QFN	40-pin PDIP 40-pin UQFN 44-pin TQFP 44-pin QFN

Note 1: PIC18FXXK22: operating voltage, 2.3V-5.5V.
PIC18LFXXK22: operating voltage, 1.8V-3.6V.

THE MICROCHIP WEBSITE

Microchip provides online support via our website at www.microchip.com. This website is used as a means to make files and information easily available to customers. Accessible by using your favorite Internet browser, the website contains the following information:

- **Product Support** – Data sheets and errata, application notes and sample programs, design resources, user's guides and hardware support documents, latest software releases and archived software
- **General Technical Support** – Frequently Asked Questions (FAQ), technical support requests, online discussion groups, Microchip consultant program member listing
- **Business of Microchip** – Product selector and ordering guides, latest Microchip press releases, listing of seminars and events, listings of Microchip sales offices, distributors and factory representatives

CUSTOMER CHANGE NOTIFICATION SERVICE

Microchip's customer notification service helps keep customers current on Microchip products. Subscribers will receive e-mail notification whenever there are changes, updates, revisions or errata related to a specified product family or development tool of interest.

To register, access the Microchip website at www.microchip.com. Under "Support", click on "Customer Change Notification" and follow the registration instructions.

CUSTOMER SUPPORT

Users of Microchip products can receive assistance through several channels:

- Distributor or Representative
- Local Sales Office
- Field Application Engineer (FAE)
- Technical Support

Customers should contact their distributor, representative or Field Application Engineer (FAE) for support. Local sales offices are also available to help customers. A listing of sales offices and locations is included in the back of this document.

Technical support is available through the website at: http://microchip.com/support

© 2010-2016 Microchip Technology Inc.

PRODUCT IDENTIFICATION SYSTEM

To order or obtain information, e.g., on pricing or delivery, refer to the factory or the listed sales office.

PART NO.	[X](2)	-	X	/XX	XXX
Device	Tape and Reel Option		Temperature Range	Package	Pattern

Device:	PIC18F23K22, PIC18LF23K22 PIC18F24K22, PIC18LF24K22 PIC18F25K22, PIC18LF25K22 PIC18F26K22, PIC18LF26K22 PIC18F43K22, PIC18LF43K22 PIC18F44K22, PIC18LF44K22 PIC18F45K22, PIC18LF45K22 PIC18F46K22, PIC18LF46K22
Tape and Reel Option:	Blank = standard packaging (tube or tray) T = Tape and Reel(1), (2)
Temperature Range:	E = -40°C to +125°C (Extended) I = -40°C to +85°C (Industrial)
Package:	ML = QFN MV = UQFN P = PDIP PT = TQFP (Thin Quad Flatpack) SO = SOIC SP = Skinny Plastic DIP SS = SSOP
Pattern:	QTP, SQTP, Code or Special Requirements (blank otherwise)

Examples:

a) PIC18(L)F45K22-E/P 301 = Extended temp., PDIP package, QTP pattern #301.

b) PIC18F46K22-I/SO = Industrial temp., SOIC package.

c) PIC18F46K22-E/P = Extended temp., PDIP package.

d) PIC18F46K22T-I/ML = Tape and reel, Industrial temp., QFN package.

Note 1: Tape and Reel option is available for ML, MV, PT, SO and SS packages with industrial Temperature Range only.

2: Tape and Reel identifier only appears in catalog part number description. This identifier is used for ordering purposes and is not printed on the device package.

Note the following details of the code protection feature on Microchip devices:

- Microchip products meet the specification contained in their particular Microchip Data Sheet.
- Microchip believes that its family of products is one of the most secure families of its kind on the market today, when used in the intended manner and under normal conditions.
- There are dishonest and possibly illegal methods used to breach the code protection feature. All of these methods, to our knowledge, require using the Microchip products in a manner outside the operating specifications contained in Microchip's Data Sheets. Most likely, the person doing so is engaged in theft of intellectual property.
- Microchip is willing to work with the customer who is concerned about the integrity of their code.
- Neither Microchip nor any other semiconductor manufacturer can guarantee the security of their code. Code protection does not mean that we are guaranteeing the product as "unbreakable."

Code protection is constantly evolving. We at Microchip are committed to continuously improving the code protection features of our products. Attempts to break Microchip's code protection feature may be a violation of the Digital Millennium Copyright Act. If such acts allow unauthorized access to your software or other copyrighted work, you may have a right to sue for relief under that Act.

Information contained in this publication regarding device applications and the like is provided only for your convenience and may be superseded by updates. It is your responsibility to ensure that your application meets with your specifications. MICROCHIP MAKES NO REPRESENTATIONS OR WARRANTIES OF ANY KIND WHETHER EXPRESS OR IMPLIED, WRITTEN OR ORAL, STATUTORY OR OTHERWISE, RELATED TO THE INFORMATION, INCLUDING BUT NOT LIMITED TO ITS CONDITION, QUALITY, PERFORMANCE, MERCHANTABILITY OR FITNESS FOR PURPOSE**.** Microchip disclaims all liability arising from this information and its use. Use of Microchip devices in life support and/or safety applications is entirely at the buyer's risk, and the buyer agrees to defend, indemnify and hold harmless Microchip from any and all damages, claims, suits, or expenses resulting from such use. No licenses are conveyed, implicitly or otherwise, under any Microchip intellectual property rights unless otherwise stated.

Microchip received ISO/TS-16949:2009 certification for its worldwide headquarters, design and wafer fabrication facilities in Chandler and Tempe, Arizona; Gresham, Oregon and design centers in California and India. The Company's quality system processes and procedures are for its PIC® MCUs and dsPIC® DSCs, KEELOQ® code hopping devices, Serial EEPROMs, microperipherals, nonvolatile memory and analog products. In addition, Microchip's quality system for the design and manufacture of development systems is ISO 9001:2000 certified.

QUALITY MANAGEMENT SYSTEM CERTIFIED BY DNV

= ISO/TS 16949 =

Trademarks

The Microchip name and logo, the Microchip logo, AnyRate, dsPIC, FlashFlex, flexPWR, Heldo, JukeBlox, KeeLoq, KeeLoq logo, Kleer, LANCheck, LINK MD, MediaLB, MOST, MOST logo, MPLAB, OptoLyzer, PIC, PICSTART, PIC32 logo, RightTouch, SpyNIC, SST, SST Logo, SuperFlash and UNI/O are registered trademarks of Microchip Technology Incorporated in the U.S.A. and other countries.

ClockWorks, The Embedded Control Solutions Company, ETHERSYNCH, Hyper Speed Control, HyperLight Load, IntelliMOS, mTouch, Precision Edge, and QUIET-WIRE are registered trademarks of Microchip Technology Incorporated in the U.S.A.

Analog-for-the-Digital Age, Any Capacitor, AnyIn, AnyOut, BodyCom, chipKIT, chipKIT logo, CodeGuard, dsPICDEM, dsPICDEM.net, Dynamic Average Matching, DAM, ECAN, EtherGREEN, In-Circuit Serial Programming, ICSP, Inter-Chip Connectivity, JitterBlocker, KleerNet, KleerNet logo, MiWi, motorBench, MPASM, MPF, MPLAB Certified logo, MPLIB, MPLINK, MultiTRAK, NetDetach, Omniscient Code Generation, PICDEM, PICDEM.net, PICkit, PICtail, PureSilicon, RightTouch logo, REAL ICE, Ripple Blocker, Serial Quad I/O, SQI, SuperSwitcher, SuperSwitcher II, Total Endurance, TSHARC, USBCheck, VariSense, ViewSpan, WiperLock, Wireless DNA, and ZENA are trademarks of Microchip Technology Incorporated in the U.S.A. and other countries.

SQTP is a service mark of Microchip Technology Incorporated in the U.S.A.

Silicon Storage Technology is a registered trademark of Microchip Technology Inc. in other countries.

GestIC is a registered trademark of Microchip Technology Germany II GmbH & Co. KG, a subsidiary of Microchip Technology Inc., in other countries.

All other trademarks mentioned herein are property of their respective companies.

© 2010-2016, Microchip Technology Incorporated, Printed in the U.S.A., All Rights Reserved.

ISBN: 978-1-5224-0907-6

Worldwide Sales and Service

AMERICAS

Corporate Office
2355 West Chandler Blvd.
Chandler, AZ 85224-6199
Tel: 480-792-7200
Fax: 480-792-7277
Technical Support:
http://www.microchip.com/support
Web Address:
www.microchip.com

Atlanta
Duluth, GA
Tel: 678-957-9614
Fax: 678-957-1455

Austin, TX
Tel: 512-257-3370

Boston
Westborough, MA
Tel: 774-760-0087
Fax: 774-760-0088

Chicago
Itasca, IL
Tel: 630-285-0071
Fax: 630-285-0075

Cleveland
Independence, OH
Tel: 216-447-0464
Fax: 216-447-0643

Dallas
Addison, TX
Tel: 972-818-7423
Fax: 972-818-2924

Detroit
Novi, MI
Tel: 248-848-4000

Houston, TX
Tel: 281-894-5983

Indianapolis
Noblesville, IN
Tel: 317-773-8323
Fax: 317-773-5453

Los Angeles
Mission Viejo, CA
Tel: 949-462-9523
Fax: 949-462-9608

New York, NY
Tel: 631-435-6000

San Jose, CA
Tel: 408-735-9110

Canada - Toronto
Tel: 905-695-1980
Fax: 905-695-2078

ASIA/PACIFIC

Asia Pacific Office
Suites 3707-14, 37th Floor
Tower 6, The Gateway
Harbour City, Kowloon

Hong Kong
Tel: 852-2943-5100
Fax: 852-2401-3431

Australia - Sydney
Tel: 61-2-9868-6733
Fax: 61-2-9868-6755

China - Beijing
Tel: 86-10-8569-7000
Fax: 86-10-8528-2104

China - Chengdu
Tel: 86-28-8665-5511
Fax: 86-28-8665-7889

China - Chongqing
Tel: 86-23-8980-9588
Fax: 86-23-8980-9500

China - Dongguan
Tel: 86-769-8702-9880

China - Guangzhou
Tel: 86-20-8755-8029

China - Hangzhou
Tel: 86-571-8792-8115
Fax: 86-571-8792-8116

China - Hong Kong SAR
Tel: 852-2943-5100
Fax: 852-2401-3431

China - Nanjing
Tel: 86-25-8473-2460
Fax: 86-25-8473-2470

China - Qingdao
Tel: 86-532-8502-7355
Fax: 86-532-8502-7205

China - Shanghai
Tel: 86-21-5407-5533
Fax: 86-21-5407-5066

China - Shenyang
Tel: 86-24-2334-2829
Fax: 86-24-2334-2393

China - Shenzhen
Tel: 86-755-8864-2200
Fax: 86-755-8203-1760

China - Wuhan
Tel: 86-27-5980-5300
Fax: 86-27-5980-5118

China - Xian
Tel: 86-29-8833-7252
Fax: 86-29-8833-7256

ASIA/PACIFIC

China - Xiamen
Tel: 86-592-2388138
Fax: 86-592-2388130

China - Zhuhai
Tel: 86-756-3210040
Fax: 86-756-3210049

India - Bangalore
Tel: 91-80-3090-4444
Fax: 91-80-3090-4123

India - New Delhi
Tel: 91-11-4160-8631
Fax: 91-11-4160-8632

India - Pune
Tel: 91-20-3019-1500

Japan - Osaka
Tel: 81-6-6152-7160
Fax: 81-6-6152-9310

Japan - Tokyo
Tel: 81-3-6880- 3770
Fax: 81-3-6880-3771

Korea - Daegu
Tel: 82-53-744-4301
Fax: 82-53-744-4302

Korea - Seoul
Tel: 82-2-554-7200
Fax: 82-2-558-5932 or
82-2-558-5934

Malaysia - Kuala Lumpur
Tel: 60-3-6201-9857
Fax: 60-3-6201-9859

Malaysia - Penang
Tel: 60-4-227-8870
Fax: 60-4-227-4068

Philippines - Manila
Tel: 63-2-634-9065
Fax: 63-2-634-9069

Singapore
Tel: 65-6334-8870
Fax: 65-6334-8850

Taiwan - Hsin Chu
Tel: 886-3-5778-366
Fax: 886-3-5770-955

Taiwan - Kaohsiung
Tel: 886-7-213-7828

Taiwan - Taipei
Tel: 886-2-2508-8600
Fax: 886-2-2508-0102

Thailand - Bangkok
Tel: 66-2-694-1351
Fax: 66-2-694-1350

EUROPE

Austria - Wels
Tel: 43-7242-2244-39
Fax: 43-7242-2244-393

Denmark - Copenhagen
Tel: 45-4450-2828
Fax: 45-4485-2829

France - Paris
Tel: 33-1-69-53-63-20
Fax: 33-1-69-30-90-79

Germany - Dusseldorf
Tel: 49-2129-3766400

Germany - Karlsruhe
Tel: 49-721-625370

Germany - Munich
Tel: 49-89-627-144-0
Fax: 49-89-627-144-44

Italy - Milan
Tel: 39-0331-742611
Fax: 39-0331-466781

Italy - Venice
Tel: 39-049-7625286

Netherlands - Drunen
Tel: 31-416-690399
Fax: 31-416-690340

Poland - Warsaw
Tel: 48-22-3325737

Spain - Madrid
Tel: 34-91-708-08-90
Fax: 34-91-708-08-91

Sweden - Stockholm
Tel: 46-8-5090-4654

UK - Wokingham
Tel: 44-118-921-5800
Fax: 44-118-921-5820

06/23/16