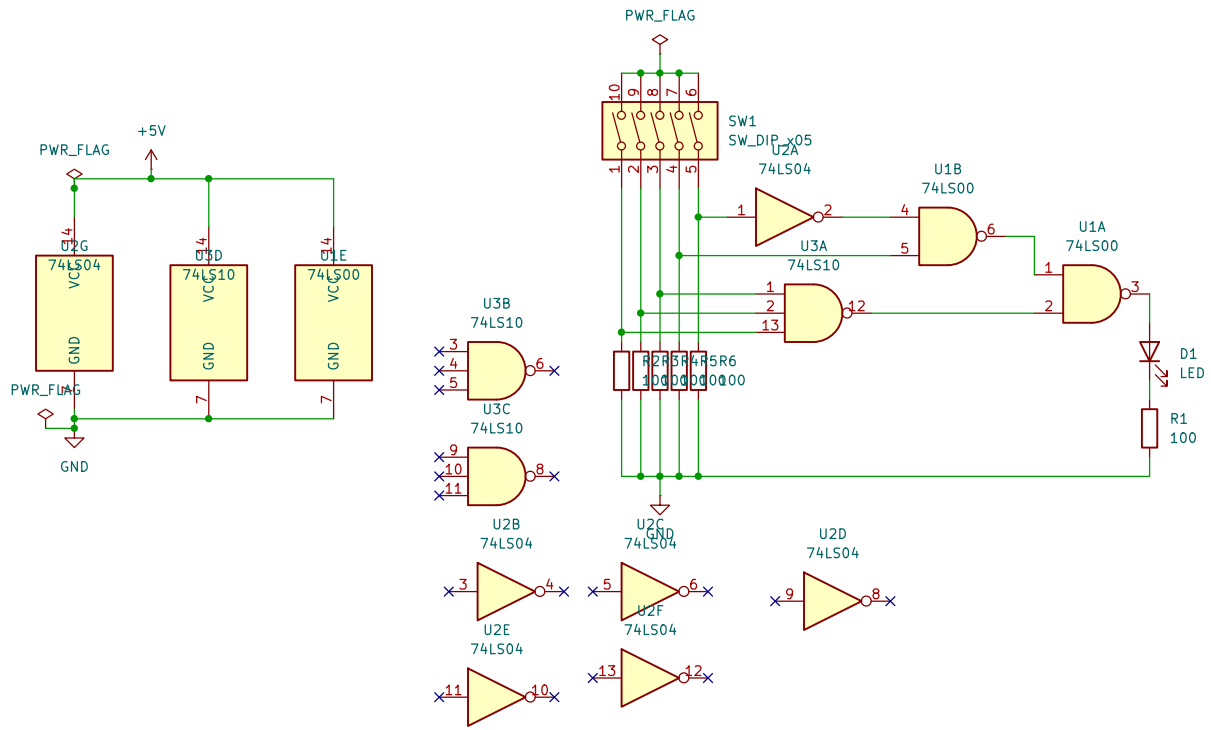

Chrys Sean T. Sevilla

Sheet: /

File: SEVILLA_PA1-1.kicad_sch

Title: Logic Circuit Example #1

Size: USLetter	Date: 2025-06-24	Rev: 1.0
KiCad E.D.A. 9.0.2		Id: 1/1