LAMP

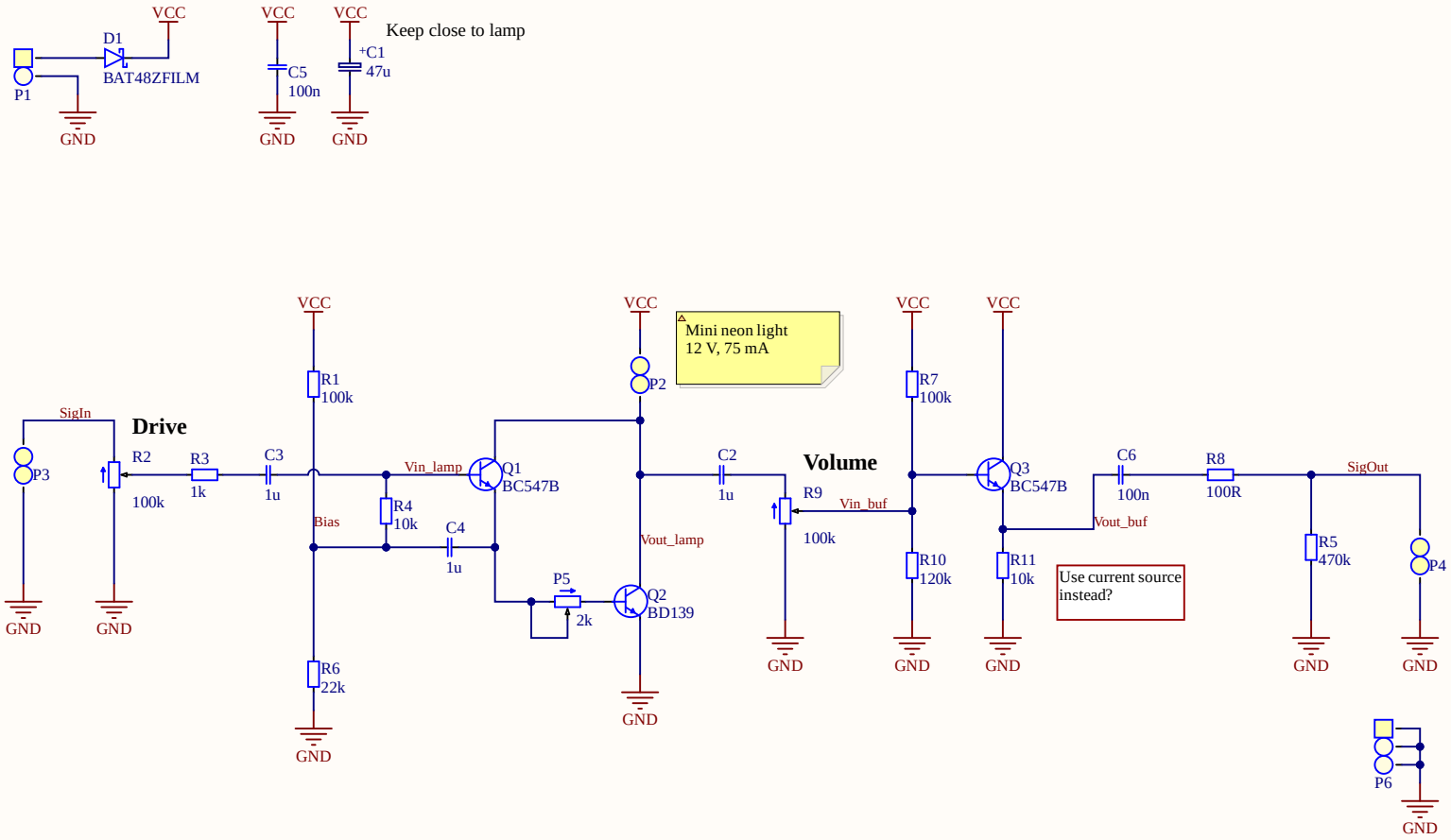

TITLE: LAMP	
DOCUMENT: LAMP.SchDoc	
REV: 0.2	DATE: 2026-03-16
noxet	