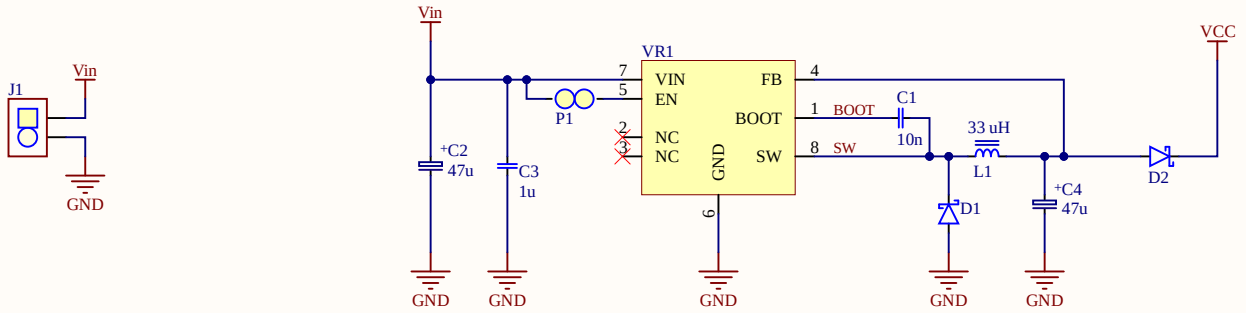

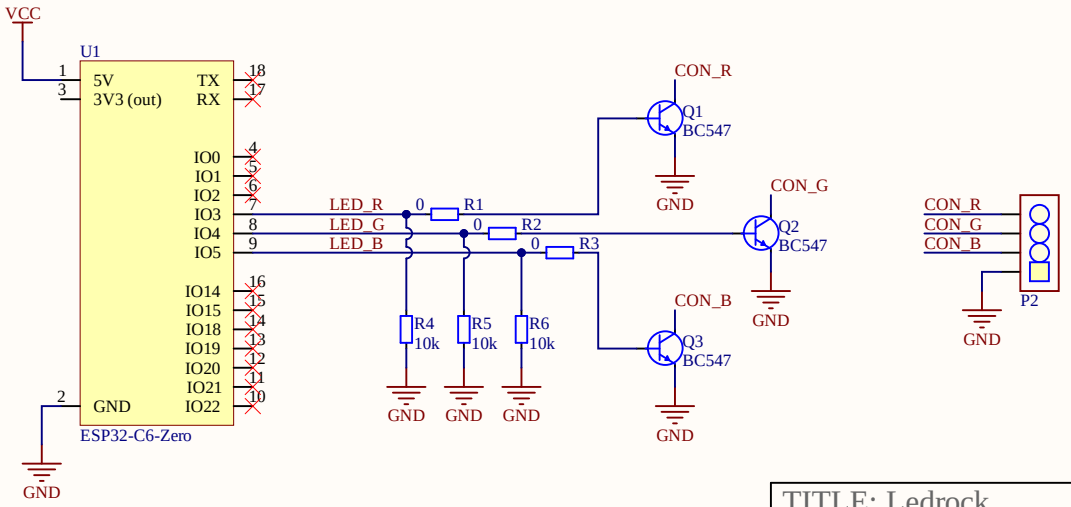

TODO:
- Make footprint for ESP
- Select components for VREG: ind, out cap
- Find connectors for Vin and LEDs

TITLE: Ledrock	
DOCUMENT: Ledrock.SchDoc	
REV: 1.0	DATE: 2026-03-29
noxet	