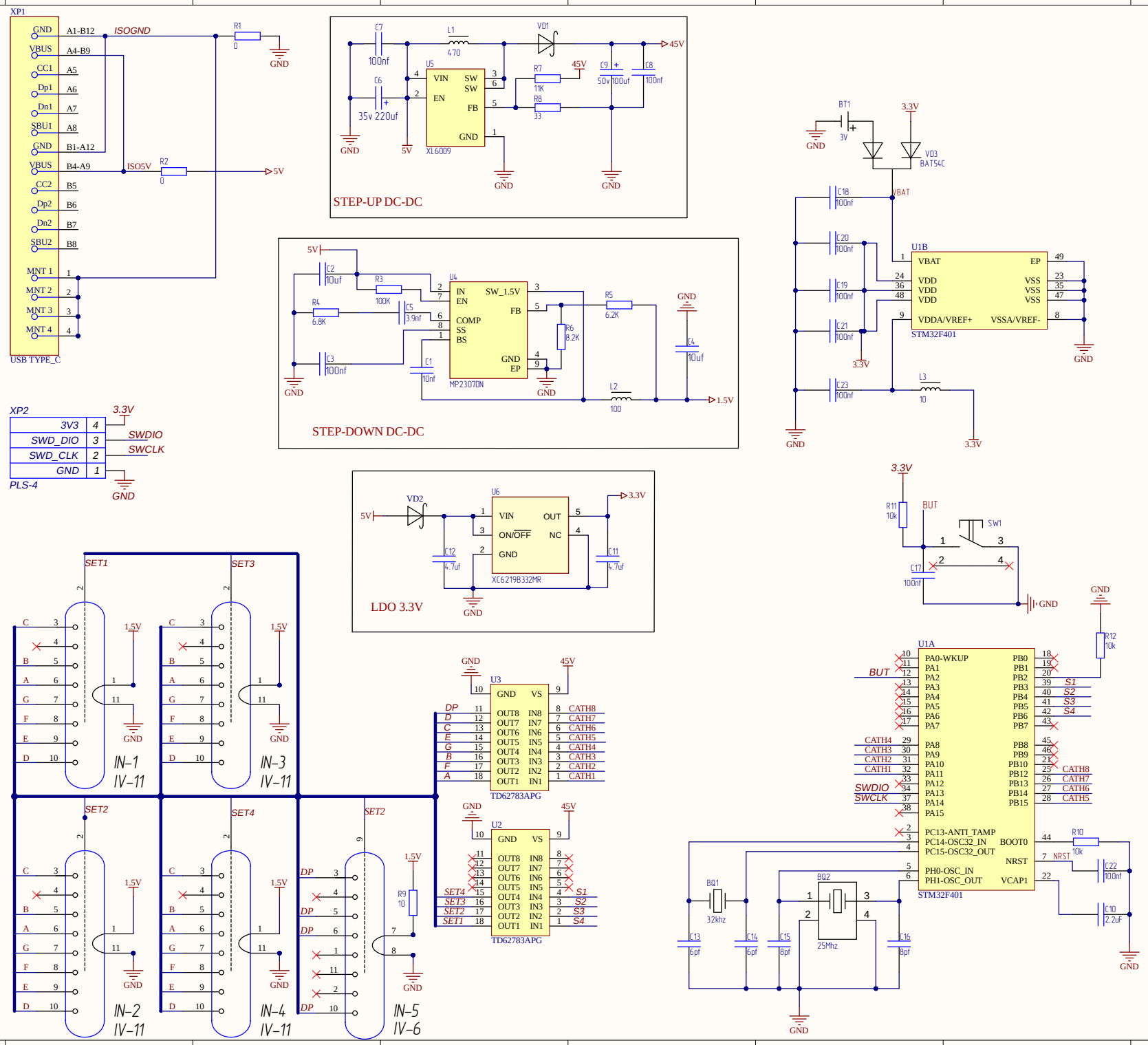
XP1
USB TYPE_C
ISOGND
ISO5V
R1
R2
STEP-UP DC-DC
XL6009
STEP-DOWN DC-DC
MP2307DN
LDO 3.3V
XC6219B332MR
XP2
PLS-4
SWDIO
SWCLK
STM32F401
TD62783APG
IN-1 IV-11
IN-2 IV-11
IN-3 IV-11
IN-4 IV-11
IN-5 IV-6
SET1
SET2
SET3
SET4
BUT
BQ1 32khz
BQ2 25Mhz