MANUFACTURING FOR AI

Smart layer connecting agentic AI to manufacturing

Nuoli turns agent-generated work into physical builds, validation, and production routing.

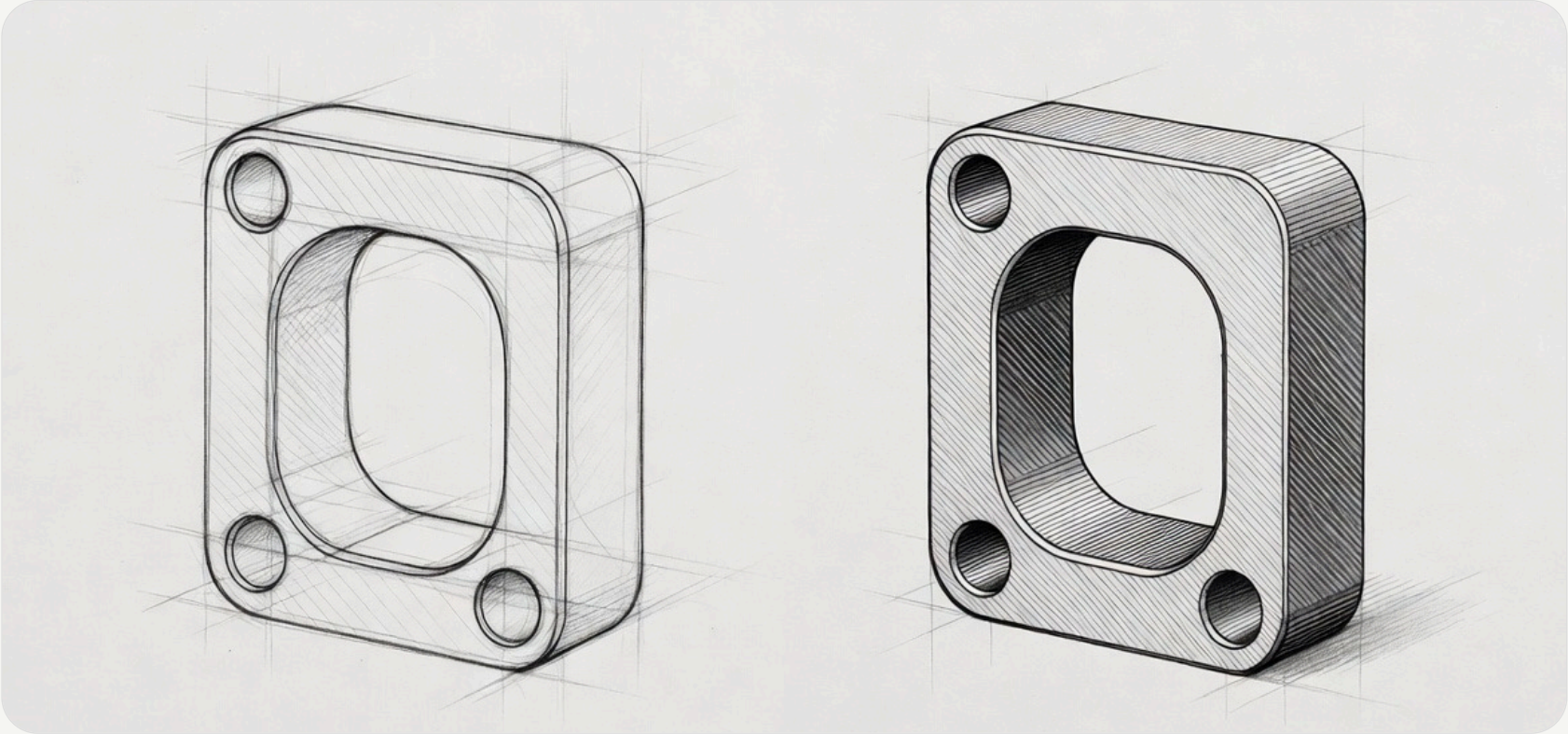

WHO WE SERVE

Builders - Speed without Friction

Design cycles have collapsed from months to minutes, but validation and testing still lag behind—creating a gap between what can be imagined and what can be built.

Nuoli → close the gap between rapid design and full-loop execution

AI - From Prompt to Product

Millions of new builders—startups, engineers, and internal teams—can generate designs instantly. The bottleneck is no longer creativity, but validation, feasibility, and execution.

Nuoli → provides validation and physical testing layer

Providers - A New Type of Client

AI drives new CNC demand. Individuals and teams are building faster than ever. Keep up with this new demand with an AI-native marketplace.

Nuoli → get discovered and win qualified jobs.

AGENT-NATIVE DEMAND

Agents generate work faster than ever.

AI-native builders are rapidly producing designs, iterations. Nuoli helps meet this new demand for manufacturable, reliable, and validated production pipelines.

Prompts → create raw designs

Raw design → validated part

Validated parts→ real-world orders and ***

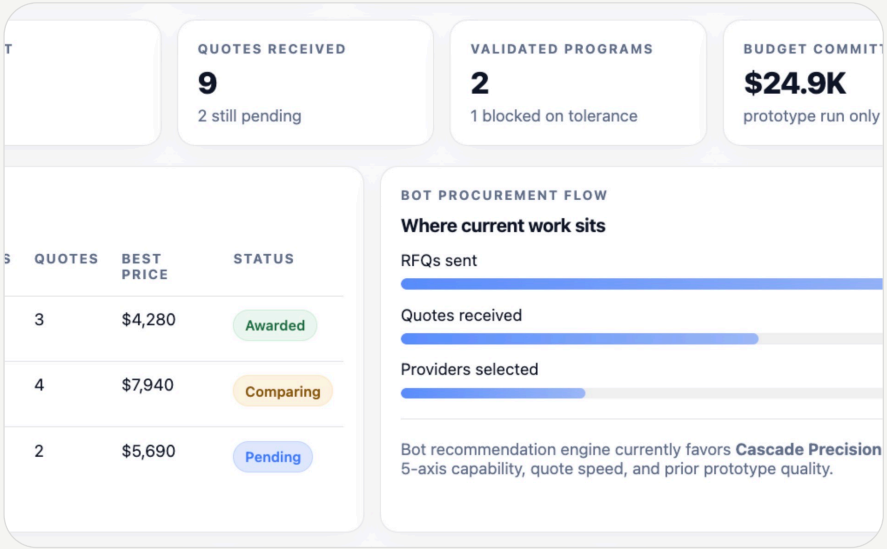

REAL-TIME VALIDATION AND WORKORDERS

When your prompting is done

Nuoli enables users and agents to complete real-world work—handling validation, RFQs, and provider coordination while tracking budgets, workorders, and delivery progress.

Design files → validated + ready

RFQs → created + sent

Budgets → tracked across jobs

AI-READY PROVIDER WORKFLOW

Getting ready for AI-driven demand

This new market requires providers to be discoverable, responsive, and reliable. Nuoli helps routes AI-generated work, enables fast reliable quotes, and helps execution.

- More visibility to qualified work
- Faster response to CNC demand
- Continuous pipeline instead of one-off leads

RQ-2399 Nimble Motion	Joint cover plate Delrin, 18 units	MakerFlow	79% fit	Apr 5 · 9 AM	Declined

EXECUTION

Active prototype jobs

JOB	PROGRAM	STAGE	ETA	RISK
JB-881 Atlas Robotics	Gripper v3	Machining	Apr 2	Low
JB-876 ServoForge	Thermal mount	QC	Apr 1	Med
JB-872 Atlas Robotics	Wheel hub proto	Packing	Apr 1	Low

CURRENT MILESTONE

Atlas Robotics · Gripper v3

RFQ | Quote | Awarded | **Machining** | QC | Ship

Material verified, fixture locked, final scheduled for tonight.

Build the physical layer for agentic work.

From prototyping to production routing, Nuoli connects AI-generated work to real manufacturing outcomes.

Contact