MANUFACTURING FOR AI

Smart layer connecting agentic AI to manufacturing

Nuoli turns agent-generated work into physical builds, validation, and production routing.

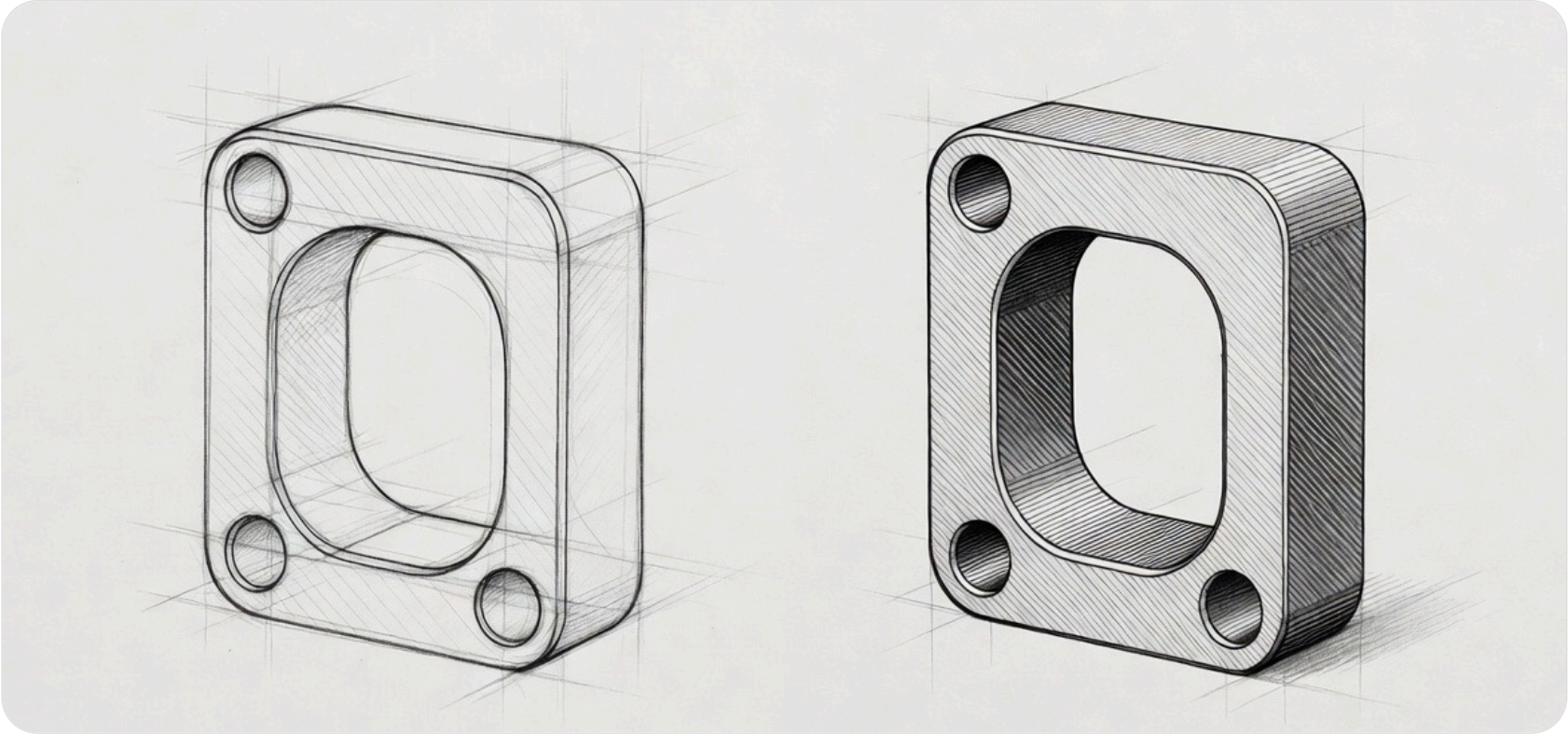

WHO WE SERVE

Builders

AI generates designs and optimizations at superhuman speed.

Manual builds and sourcing slow validation and scale.

Nuoli → build and validate faster.

AI Tool Users

Agents generate real-world work continuously.

No execution layer exists to fulfill it.

Nuoli → route work to real providers.

Providers

AI drives new CNC demand.

Manual quoting limits visibility and speed.

Nuoli → get discovered and win more jobs.

AGENT-NATIVE DEMAND

Agents generate work faster than human workflows can absorb.

AI systems can create designs, production options, and sourcing requests continuously. Nuoli gives them a direct path into physical manufacturing.

Agent prompt → work request

Design intent → manufacturable workflow

Digital output → physical build path

Placeholder for agent demand image

Placeholder for validation and routing image

VALIDATION + ROUTING (WATCH YOUR BOTS)

Nuoli turns intent into structured steps.

Instead of chat and manual coordination, Nuoli validates assets, routes work, and prepares requests for the right CNC and manufacturing providers.

Validate files and requirements

Match capabilities and suppliers

Prepare RFQs and next actions

CONTINUOUS PROVIDER FLOW (WATCH YOUR DEALS)

Providers should be ready for AI-driven demand.

As agents generate more work, the shops that are easiest to route to, quote with, and trust will stay in the flow of demand.

- More visibility to qualified work
- Faster response to CNC demand
- Continuous pipeline instead of one-off leads

Placeholder for provider network image

Build the physical layer for agentic work.

From prototyping to production routing, Nuoli connects AI-generated work to real manufacturing outcomes.

Contact